VIN PLATE DECODING INFORMATION

1	2	3	4	5	6	7	8	9	10	11	12 thru 17
WMI	**WMI**	**WMI**	**Other**	**Line**	**Series**	**Body Style**	**Engine**	**Check Digit**	**Model Year**	**Assy. Plant**	**Sequence No.**

The following table interprets the VIN Plate position shown above.

Position	Interpretation	Codes = Description
1	World Manufacturer Identi	W = DaimlerChrysler AG
2	World Manufacturer Identi	C = Sprinter
3	World Manufacturer Identi	W = Dodge Bus X = Dodge Incomplete 8 = Dodge Multipurpose Passenger Vehicle 0 = Dodge Wagon P = Freightliner Incomplete R = Freightliner Multipurpose Passenger Vehicle Y = Freightliner Wagon D = Freightliner Bus
4	Chassis Configuration	P = 4 X 2 - U.S. B = 4 X 2 - Canada
5	Vehicle Line	E = Combine with position 6 F = Combine with position 6
6	Series	1 = 2500C/C2500/P2500 3000 mm 15 in. wheel 8,001 - 9,000 lbs. Class G 3 = 2500C/C2500/P2500 4025 mm 15 in. wheel 8,001 - 9,000 lbs. Class G 7 = 2500C/C2500/P2500 4042 mm 16in. wheel 8,001 - 9,000 lbs. Class G 8 = 3500C 3567 mm 16in. wheel 10,001 - 14,000 lbs. Class 3 4 = 3500C/C3500 3550 mm 15 in. wheel 9,001 - 10,000 lbs. Class H 0 = C3500 4325mm 16 in. wheel 9,000 - 10,000 lbs. Class H
7	Body Style	4 = Combine with position 8
8	Engine	5 = 3.0L V6 50-State Diesel, Hydraulic Brakes 6 = 3.5L V6 Gasoline, Hydraulic Brakes
9	Check Digit	0 = Check Digit
10	Model Year	8 = 2008
11	Assembly Plant	5 = Dusseldorf 9 = Ludwigsfelde
12 thru 17	Vehicle Build Sequence	Model Year Assembly Sequence

Group - 2

Front Suspension

Group - 2 Front Suspension

Illustration Title — Group-Fig. No.

Front Suspension, Strut and Cradle

Suspension, Front ..... Fig. 2 - 105
Suspension, Front ..... Fig. 2 - 106
Cradle, Front Suspension ..... Fig. 2 - 150
Steering Knuckle and Control Arm ..... Fig. 2 - 160
Steering Knuckle and Control Arm ..... Fig. 2 - 170

Front Stabilizer Bar

Stabilizer Bar, Front, FWD/RWD/AWD ..... Fig. 2 - 205
Stabilizer Bar, Front, FWD/RWD/AWD ..... Fig. 2 - 206

002-100 Front Suspension, Strut and Cradle 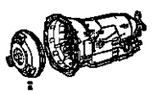	**002-200** Front Stabilizer Bar		

Suspension, Front
Figure 2-105

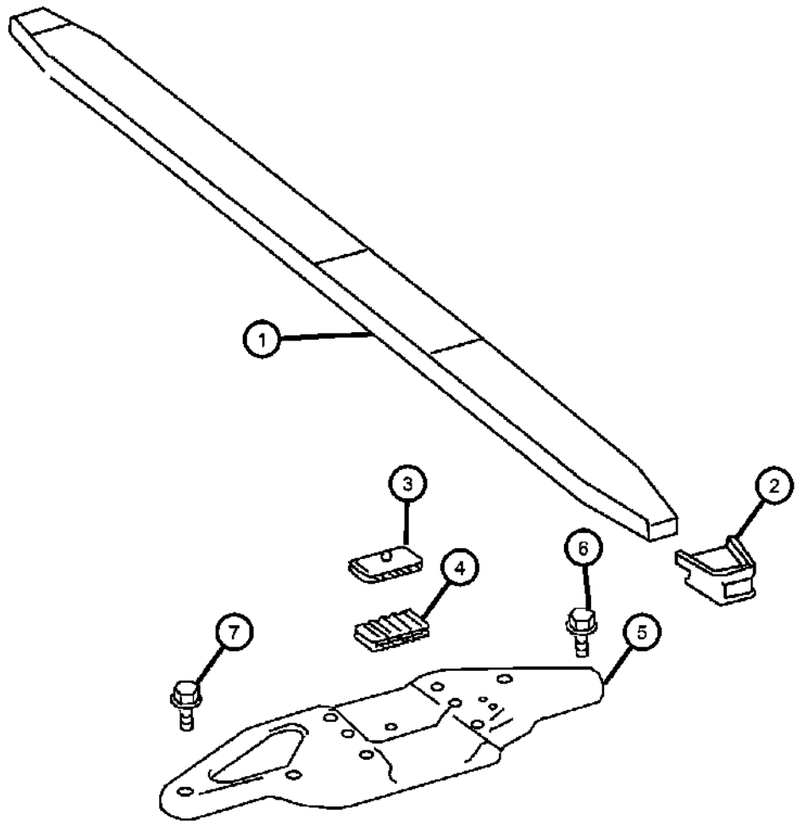

ITEM	PART NUMBER	QTY	LINE	SERIES	BODY	ENGINE	TRANS	TRIM	DESCRIPTION
NOTE:									
Sales Codes:									
1	68012186AA	1	2, 6			EG2, EXM			SPRING, Front Leaf
2	68012188AA	2	2, 3, 6, 7			EXM, EG2	DGZ		SEAT, SpringOuter
3	68012189AA	2	2, 3, 6, 7			EG2, EXM	DGZ		SEAT, SpringTop
4	68012190AA	2	2, 3, 6, 7			EG2, EXM	DGZ		SEAT, SpringLower
5									PLATE, Suspension
	68012192AA	1	2, 3, 6, 7			EG2, EXM	DGZ		Right
	68012193AA	1	2, 3, 6, 7			EG2, EXM	DGZ		Left
6	05136546AA	1	2, 6		13, 15, 17, 53, 55	EG2	DGZ		BOLT, Plate To Body Support [M8 x 25MM]
7	68007013AA	6	2, 3, 6, 7			EG2, EXM	DGZ		SCREW, Plate To Body [M12x1.5x40-12.9MM

SPRINTER (VB)

SERIES	LINE	BODY	ENGINE	TRANSMISSION
L = LOWLINE	3 = HD DODGE 2WD 6 = Lt. Duty DODGE 4WD 2 = Med. Duty DODGE 2WD 7 = Med. Duty DODGE 4WD	17 = VAN WHEEL BASE 7 55 = WAGON WHEEL BASE 5 15 = VAN WHEEL BASE 5 53 = 119 WB 13 = 119 WB 05 = CAB CHASSIS WHEEL BASE 5 03 = CAB CHASSIS WHEEL BASE 3	EG2 = 3.5L V6 Gas Engine EXM = 3.0L V6 Turbo Diesel Engine	DGZ = 5-Speed Auto W5A380 Transmission

Suspension, Front
Figure 2-106

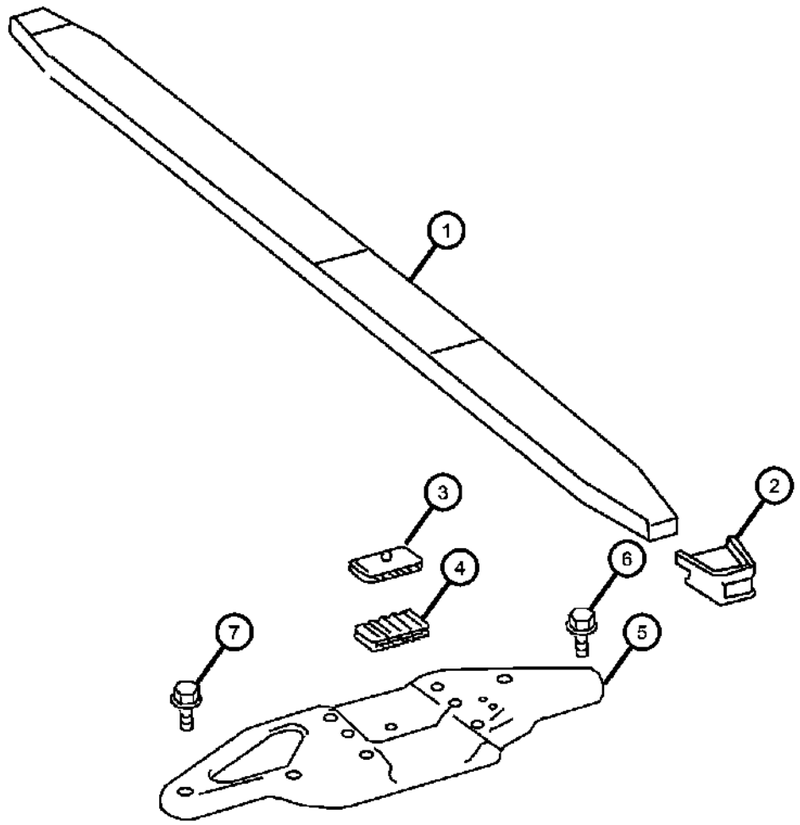

ITEM	PART NUMBER	QTY	LINE	SERIES	BODY	ENGINE	TRANS	TRIM	DESCRIPTION
NOTE:									
Sales Codes:									
[DKH]=Reinforced Front Axle									
[SHK]=Camper Body Stabilizer									
1									SPRING, Front Leaf
	68012186AA	1	3, 7			EG2, EXM			
	68012187AA	1	3, 7			EG2, EXM	DGZ		With [DKH] And Or [SHK]
2	68012188AA	2	2, 3, 6, 7			EG2, EXM	DGZ		SEAT, SpringOuter
3	68012189AA	2	2, 3, 6, 7			EG2, EXM	DGZ		SEAT, SpringTop
4	68012190AA	2	2, 3, 6, 7			EXM, EG2	DGZ		SEAT, SpringLower
5									PLATE, Suspension
	68012192AA	1	2, 3, 6, 7			EG2, EXM	DGZ		Right
	68012193AA	1	2, 3, 6, 7			EG2, EXM	DGZ		Left
6	05136546AA	1	3, 7		03, 05	EG2	DGZ		BOLT, Plate To Body Support [M8 x 25MM]
7	68007013AA	6	2, 3, 6, 7			EG2, EXM	DGZ		SCREW, Plate To Body [M12x1.5x40-12.9MM]

SPRINTER (VB)

SERIES	LINE	BODY	ENGINE	TRANSMISSION
L = LOWLINE	3 = HD DODGE 2WD 6 = Lt. Duty DODGE 4WD 2 = Med. Duty DODGE 2WD 7 = Med. Duty DODGE 4WD	17 = VAN WHEEL BASE 7 55 = WAGON WHEEL BASE 5 15 = VAN WHEEL BASE 5 53 = 119 WB 13 = 119 WB 05 = CAB CHASSIS WHEEL BASE 5 03 = CAB CHASSIS WHEEL BASE 3	EG2 = 3.5L V6 Gas Engine EXM = 3.0L V6 Turbo Diesel Engine	DGZ = 5-Speed Auto W5A380 Transmission

Cradle, Front Suspension
Figure 2-150

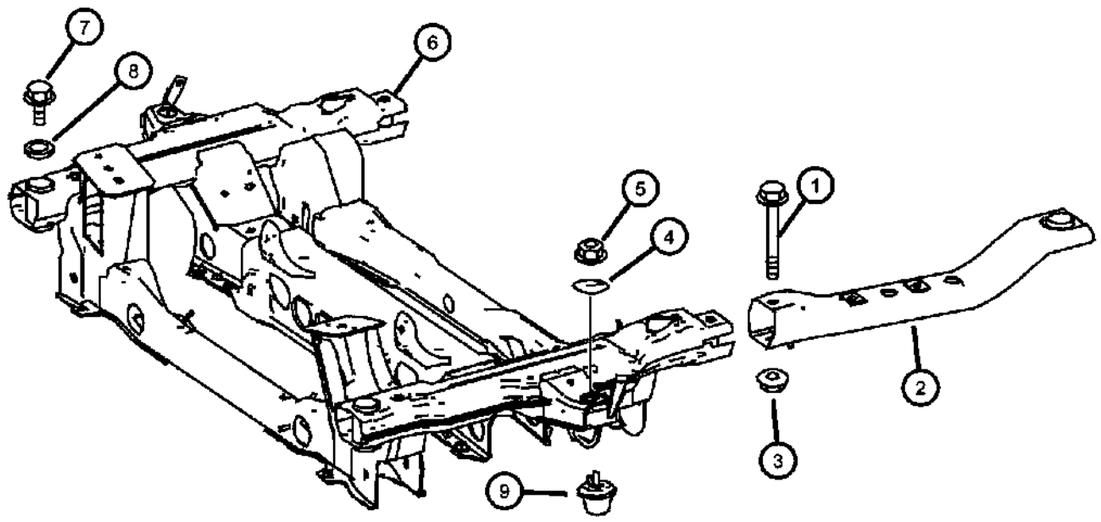

ITEM	PART NUMBER	QTY	LINE	SERIES	BODY	ENGINE	TRANS	TRIM	DESCRIPTION
NOTE:									
Sales Code:									
1									BOLT, Hex Flange Head, M14x1.50x90.00
	06104265AA	2	3, 7		03, 05	EG2, EXM	DGZ		
		2	2, 3, 6, 7		13, 15, 17, 53, 55	EG2, EXM	DGZ		
2	68013725AA	2	2, 3, 6, 7			EG2, EXM	DGZ		RAIL, Frame Front, Alongside
3									NUT
	06105172AA	2	3, 7		03, 05	EG2, EXM	DGZ		[M14x1.5]
		2	2, 3, 6, 7		13, 15, 17, 53, 55	EG2, EXM	DGZ		[M14x1.5]
4	68012162AA	2	2, 6			EG2, EXM	DGZ		WASHER
5	06105169AA	2	2, 3, 6, 7			EG2, EXM	DGZ		NUT
6									CRADLE, Front Suspension
	68012158AA	1	2, 6			EG2, EXM	DGZ		
	68012159AA	1	3, 7			EG2, EXM	DGZ		
7									BOLT
	68013728AA	2	2, 3, 6, 7			EG2, EXM	DGZ		Front
	68013730AA	2	2, 3, 6, 7			EG2, EXM	DGZ		Center
	68013731AA	2	2, 3, 6, 7			EG2, EXM	DGZ		Rear
8	68013729AA	2	2, 3, 6, 7		13, 15, 17, 53, 55	EG2, EXM	DGZ		WASHER
9	68012161AA	2	2, 3, 6, 7			EG2, EXM	DGZ		BUMPER, Jounce

SPRINTER (VB)

SERIES	LINE	BODY	ENGINE	TRANSMISSION
L = LOWLINE	3 = HD DODGE 2WD 6 = Lt. Duty DODGE 4WD 2 = Med. Duty DODGE 2WD 7 = Med. Duty DODGE 4WD	17 = VAN WHEEL BASE 7 55 = WAGON WHEEL BASE 5 15 = VAN WHEEL BASE 5 53 = 119 WB 13 = 119 WB 05 = CAB CHASSIS WHEEL BASE 5 03 = CAB CHASSIS WHEEL BASE 3	EG2 = 3.5L V6 Gas Engine EXM = 3.0L V6 Turbo Diesel Engine	DGZ = 5-Speed Auto W5A380 Transmission

Steering Knuckle and Control Arm
Figure 2-160

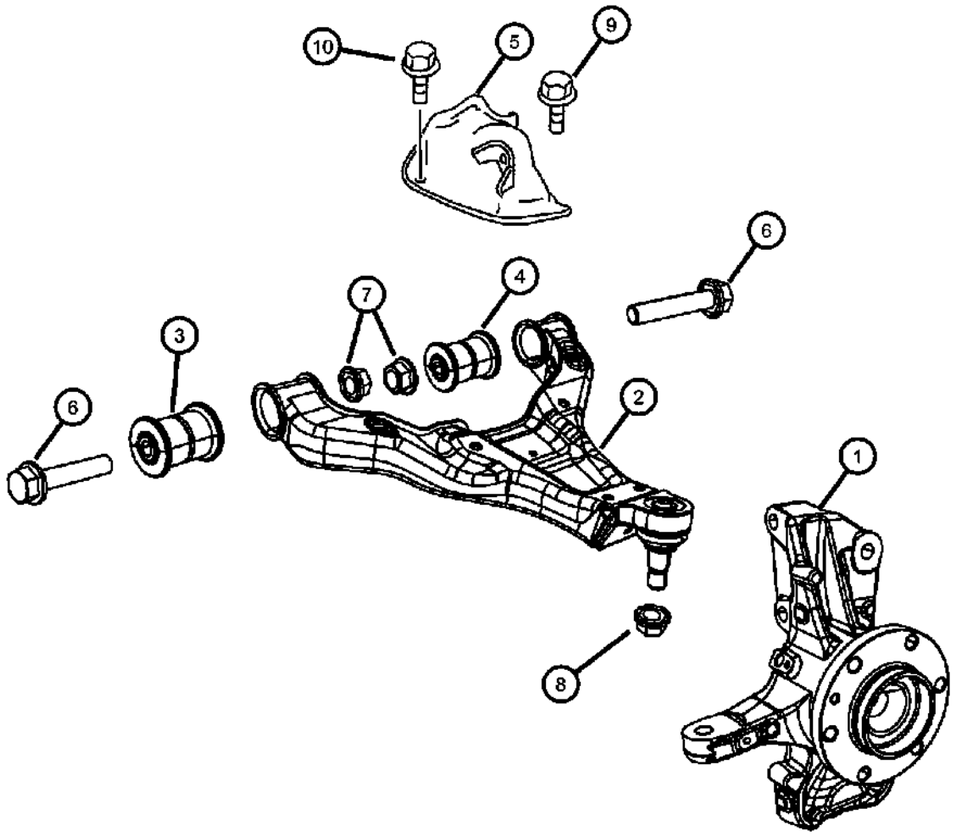

ITEM	PART NUMBER	QTY	LINE	SERIES	BODY	ENGINE	TRANS	TRIM	DESCRIPTION
Note:Knuckle Includes: Hub, Wheel Bearing, & Knuckle. Hub & Wheel Bearing Are Not Serviced.									
Sales Codes:									
1									KNUCKLE, Front, See Note:
	68006694AA	1	2, 6			EG2, EXM	DGZ		Right
	68006695AA	1	2, 6			EG2, EXM	DGZ		Left
2									ARM, Control
	68012164AA	1	2, 3, 6, 7			EG2, EXM	DGZ		Right
	68012165AA	1	2, 3, 6, 7			EG2, EXM	DGZ		Left
3	68012169AA	1	2, 3, 6, 7			EG2, EXM	DGZ		BUSHING, Control Arm
4	68012176AA	1	2, 3, 6, 7			EG2, EXM	DGZ		BUSHING, Control Arm
5									PANEL, Front Wheelhouse
	68012178AA	1	2, 3, 6, 7			EG2, EXM	DGZ		Up Travel Stop Plate, Right
	68012179AA	1	2, 3, 6, 7			EG2, EXM	DGZ		Up Travel Stop Plate, Left
6	68012157AA	4	2, 3, 6, 7			EG2, EXM	DGZ		BOLT, Hex Head, Control Arm Support
7	06105172AA	4	2, 3, 6, 7		13, 15, 17, 53, 55	EG2, EXM	DGZ		NUT, Control Arm To Support [M14 x 1.5MM]
8	05136123AA	1					DGZ		NUT, Ball Joint, Lower Ball Joint To Steering Knuckle
9	05133865AA	4	2, 3, 6, 7		13, 15, 17, 53, 55	EG2, EXM	DGZ		SCREW, Plate To Transverse Control Arm [M10x35]
10	68012177AA	4	2, 3, 6, 7		13, 15, 17, 53, 55	EG2, EXM	DGZ		SCREW, Hex Flange Head, Plate To Transverse Control Arm [M12x1.5x60]

SPRINTER (VB)

SERIES	LINE	BODY	ENGINE	TRANSMISSION
L = LOWLINE	3 = HD DODGE 2WD 6 = Lt. Duty DODGE 4WD 2 = Med. Duty DODGE 2WD 7 = Med. Duty DODGE 4WD	17 = VAN WHEEL BASE 7 55 = WAGON WHEEL BASE 5 15 = VAN WHEEL BASE 5 53 = 119 WB 13 = 119 WB 05 = CAB CHASSIS WHEEL BASE 5 03 = CAB CHASSIS WHEEL BASE 3	EG2 = 3.5L V6 Gas Engine EXM = 3.0L V6 Turbo Diesel Engine	DGZ = 5-Speed Auto W5A380 Transmission

Steering Knuckle and Control Arm
Figure 2-170

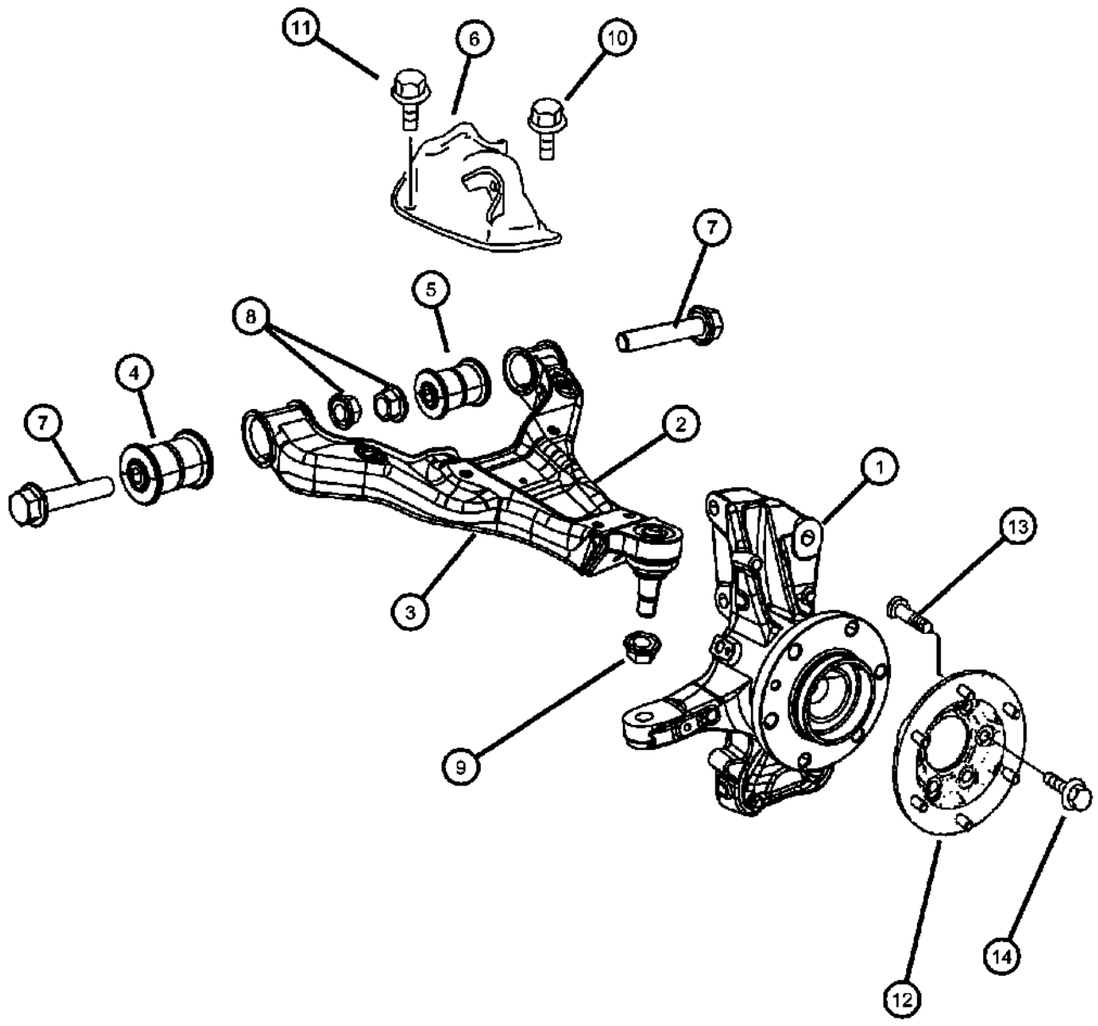

ITEM	PART NUMBER	QTY	LINE	SERIES	BODY	ENGINE	TRANS	TRIM	DESCRIPTION
Note:Knuckle Includes: Hub, Wheel Bearing, & Knuckle. Hub & Wheel Bearing Are Not Serviced.									
Sales Codes:									
1									KNUCKLE, Front, See Note:
	68006692AA	1	3, 7			EG2, EXM	DGZ		Right
	68006693AA	1	3, 7			EG2, EXM	DGZ		Left
2									ARM, Lower Control, Front
	68012166AA	1	3, 7		03, 05, 13, 15, 17	EG2, EXM	DGZ		Right
	68012167AA	1	3, 7		03, 05, 13, 15, 17	EG2, EXM	DGZ		Left
3									ARM, Control
	68012164AA	1	2, 3, 6, 7			EG2, EXM	DGZ		Right
	68012165AA	1	2, 3, 6, 7			EG2, EXM	DGZ		Left
4	68012169AA	1	2, 3, 6, 7			EG2, EXM	DGZ		BUSHING, Control Arm
5	68012176AA	1	2, 3, 6, 7			EG2, EXM	DGZ		BUSHING, Control Arm
6									PANEL, Front Wheelhouse
	68012178AA	1	2, 3, 6, 7			EG2, EXM	DGZ		Up Travel Stop Plate, Right
	68012179AA	1	2, 3, 6, 7			EG2, EXM	DGZ		Up Travel Stop Plate, Left
7	68012157AA	4	2, 3, 6, 7			EG2, EXM	DGZ		BOLT, Hex Head, Control Arm Support
8	06105172AA	2	2, 3, 6, 7		13, 15, 17, 53, 55	EG2, EXM	DGZ		NUT, Control Arm To Support [M14 x 1.5MM]
9	05136123AA	1					DGZ		NUT, Ball Joint, Lower Ball Joint To Steering Knuckle
10	05133865AA	4	3, 7		03, 05	EG2, EXM	DGZ		SCREW, Plate To Transverse Control Arm [M10x35]
11									SCREW, Hex Flange Head
	68012177AA	4	2, 3, 6, 7		13, 15, 17, 53, 55	EG2, EXM	DGZ		Plate To Transverse Control Arm [M12x1.5x60]
		4	3, 7		03, 05	EG2, EXM	DGZ		Plate To Transverse Control Arm [M12x1.5x60]
12	68021230AA	2	3, 7		03, 05, 13, 15, 17	EG2, EXM	DGZ		HUB
13	04862627AA	6	3, 7			EG2, EXM	DGZ		STUD, Wheel, With [WDK]
14									SCREW, Hex Flange Head
	06104121AA	2	3, 7		03, 05	EG2, EXM	DGZ		
		2	2, 3, 6, 7		13, 15, 17, 53, 55	EG2, EXM	DGZ		

SPRINTER (VB)

SERIES	LINE	BODY	ENGINE	TRANSMISSION
L = LOWLINE	3 = HD DODGE 2WD 6 = Lt. Duty DODGE 4WD 2 = Med. Duty DODGE 2WD 7 = Med. Duty DODGE 4WD	17 = VAN WHEEL BASE 7 55 = WAGON WHEEL BASE 5 15 = VAN WHEEL BASE 5 53 = 119 WB 13 = 119 WB 05 = CAB CHASSIS WHEEL BASE 5 03 = CAB CHASSIS WHEEL BASE 3	EG2 = 3.5L V6 Gas Engine EXM = 3.0L V6 Turbo Diesel Engine	DGZ = 5-Speed Auto W5A380 Transmission

Stabilizer Bar, Front, FWD/RWD/AWD
Figure 2-205

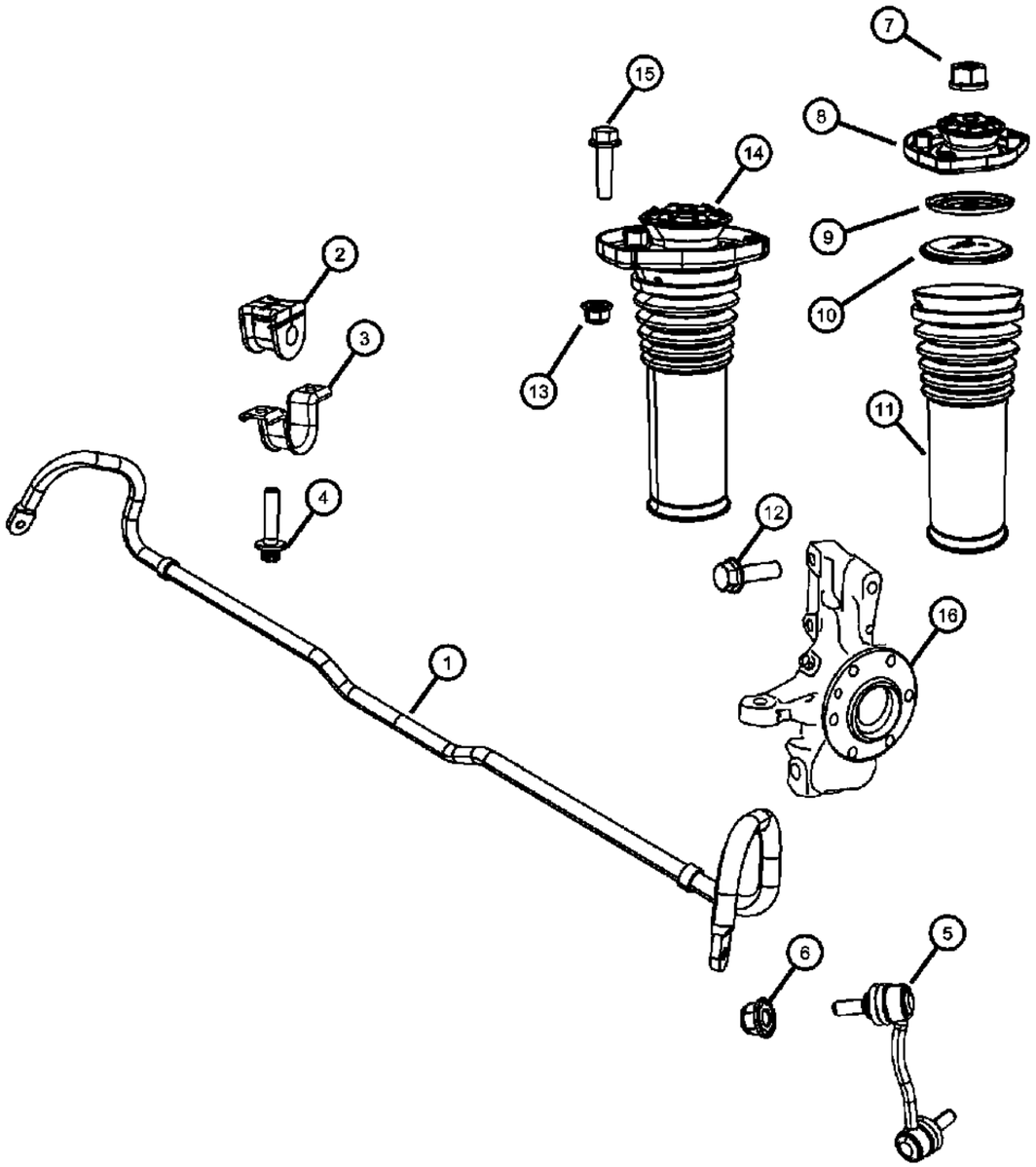

ITEM	PART NUMBER	QTY	LINE	SERIES	BODY	ENGINE	TRANS	TRIM	DESCRIPTION
NOTE:									
Sales Code:									
[DKH]=Reinforced Front Axle									
[SHA]=Front Stabilizer Bar									
[SHJ]=Front Stabilizer Bar									
1									BAR, Front Sway
	68013715AA	1	2, 3, 6, 7			EG2, EXM	DGZ		[SHJ]
	68013716AA	1	2, 6		17	EG2, EXM	DGZ		[SHA]
2									BUSHING
	68013717AA	2	2, 3, 6, 7			EG2, EXM	DGZ		[SHJ]
	68013718AA	2	2, 3, 6, 7			EG2, EXM	DGZ		[SHA]
3	68013719AA	2	2, 3, 6, 7			EG2, EXM	DGZ		RETAINER, Stabilizer Bar Grommet, Torsion Bar
4	06104042AA	4	2, 3, 6, 7			EG2, EXM	DGZ		SCREW
5									LINK, Stabilizer Bar
	68013720AA	1	2, 3, 6, 7			EG2, EXM	DGZ		Right
	68013721AA	1	2, 3, 6, 7			EG2, EXM	DGZ		Left
6	06105171AA	4	2, 3, 6, 7		13, 15, 17, 53, 55	EG2, EXM	DGZ		NUT, [M12x1.5] Torsion Bar to Rod
7	05125760AA	2	2, 3, 6, 7		13, 15, 17, 53, 55	EG2, EXM	DGZ		NUT, Hex Flange Lock
8	68013708AA	2	2, 3, 6, 7			EG2, EXM	DGZ		BUSHING, Shock Absorber
9	68013711AA	2	2, 3, 6, 7			EG2, EXM	DGZ		BUSHING, Shock Absorber
10	68013710AA	2	2, 3, 6, 7			EG2, EXM	DGZ		BUSHING, Shock Absorber
11	68013709AA	2	2, 3, 6, 7			EG2, EXM	DGZ		SHIELD, Shock Absorber Dust
12	68013712AA	1	2, 3, 6, 7			EG2, EXM	DGZ		BOLT, Camber Adjustment
13	06105172AA	1	2, 3, 6, 7			EXM, EG2	DGZ		NUT, Damper to Steering Knuckle
14	68013697AA	2	2, 3, 6, 7			EG2, EXM	DGZ		ABSORBER, Shock
15	68013727AA	8	2, 3, 6, 7			EG2, EXM	DGZ		BOLT
16									KNUCKLE, Front
	68006694AA	1	2, 6			EG2, EXM	DGZ		Right
	68006695AA	1	2, 6			EG2, EXM	DGZ		Left

SPRINTER (VB)

SERIES	LINE	BODY	ENGINE	TRANSMISSION
L = LOWLINE	3 = HD DODGE 2WD 6 = Lt. Duty DODGE 4WD 2 = Med. Duty DODGE 2WD 7 = Med. Duty DODGE 4WD	17 = VAN WHEEL BASE 7 55 = WAGON WHEEL BASE 5 15 = VAN WHEEL BASE 5 53 = 119 WB 13 = 119 WB 05 = CAB CHASSIS WHEEL BASE 5 03 = CAB CHASSIS WHEEL BASE 3	EG2 = 3.5L V6 Gas Engine EXM = 3.0L V6 Turbo Diesel Engine	DGZ = 5-Speed Auto W5A380 Transmission

Stabilizer Bar, Front, FWD/RWD/AWD
Figure 2-206

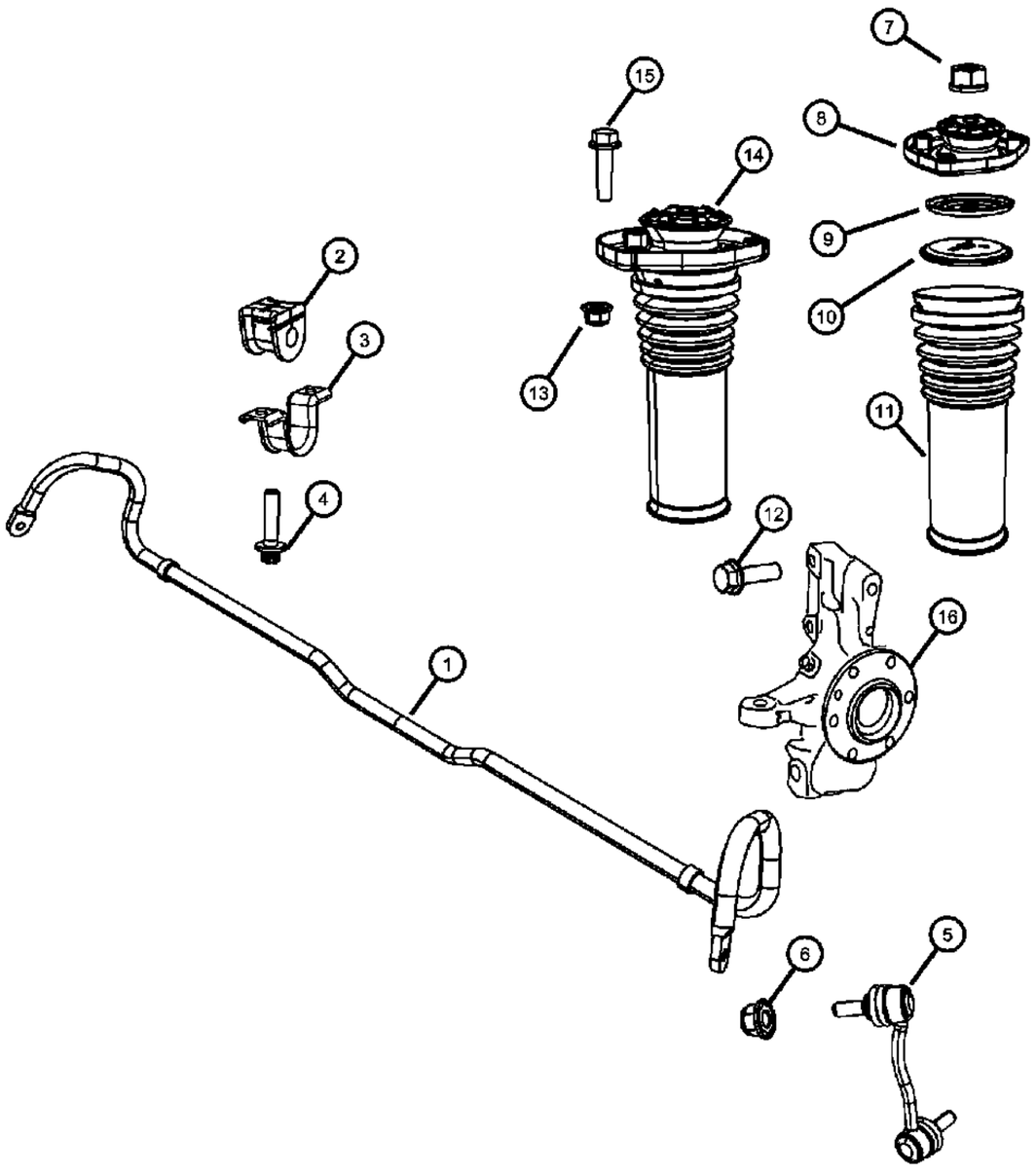

ITEM	PART NUMBER	QTY	LINE	SERIES	BODY	ENGINE	TRANS	TRIM	DESCRIPTION
	NOTE:								
	Sales Code:								
	[DKH]=Reinforced Front Axle								
	[SHA]=Front Stabilizer Bar								
	[SHJ]=Front Stabilizer Bar								
1									BAR, Front Sway
	68013715AA	1	2, 3, 6, 7			EG2, EXM	DGZ		With [SHJ]
	68013716AA	1	3, 7		03, 05, 13, 15, 17	EG2, EXM	DGZ		With [SHA]
2									BUSHING
	68013717AA	2	2, 3, 6, 7			EG2, EXM	DGZ		With [SHJ]
	68013718AA	2	2, 3, 6, 7			EG2, EXM	DGZ		With [SHA]
3	68013719AA	2	2, 3, 6, 7			EG2, EXM	DGZ		RETAINER, Stabilizer Bar Grommet, Torsion Bar
4	06104042AA	6	2, 3, 6, 7			EG2, EXM	DGZ		SCREW
5									LINK, Stabilizer Bar
	68013720AA	1	2, 3, 6, 7			EG2, EXM	DGZ		Right
	68013721AA	1	2, 3, 6, 7			EG2, EXM	DGZ		Left
6	06105171AA	4	3, 7		03, 05	EG2, EXM	DGZ		NUT
7	05125760AA	2	3, 7		03, 05	EG2, EXM	DGZ		NUT, Hex Flange Lock
8	68013708AA	2	2, 3, 6, 7			EG2, EXM	DGZ		BUSHING, Shock Absorber
9	68013711AA	2	2, 3, 6, 7			EG2, EXM	DGZ		BUSHING, Shock Absorber
10	68013710AA	2	2, 3, 6, 7			EG2, EXM	DGZ		BUSHING, Shock AbsorberLower
11	68013709AA	2	2, 3, 6, 7			EG2, EXM	DGZ		SHIELD, Shock Absorber Dust
12	68013712AA	1	2, 3, 6, 7			EG2, EXM	DGZ		BOLT, Camber Adjustment
13	06105173AA	2	3, 7			EG2, EXM	DGZ		NUT, Damper to Steering Knuckle
14	68013697AA	2	2, 3, 6, 7			EG2, EXM	DGZ		ABSORBER, Shock
15	68013727AA	8	2, 3, 6, 7			EG2, EXM	DGZ		BOLT
16									KNUCKLE, Front
	68006692AA	1	3, 7			EG2, EXM	DGZ		Right
	68006693AA	1	3, 7			EG2, EXM	DGZ		Left

SPRINTER (VB)

SERIES	LINE	BODY	ENGINE	TRANSMISSION
L = LOWLINE	3 = HD DODGE 2WD 6 = Lt. Duty DODGE 4WD 2 = Med. Duty DODGE 2WD 7 = Med. Duty DODGE 4WD	17 = VAN WHEEL BASE 7 55 = WAGON WHEEL BASE 5 15 = VAN WHEEL BASE 5 53 = 119 WB 13 = 119 WB 05 = CAB CHASSIS WHEEL BASE 5 03 = CAB CHASSIS WHEEL BASE 3	EG2 = 3.5L V6 Gas Engine EXM = 3.0L V6 Turbo Diesel Engine	DGZ = 5-Speed Auto W5A380 Transmission

Group - 3

Rear Wheel Drive; Differential and Drive Line

Group - 3 Rear Wheel Drive; Differential and Drive Line

Illustration Title — Group-Fig. No.

Drive Shaft
Shaft,Drive,Rear,3-Piece ..... Fig. 3 - 660
Shaft,Drive,Rear,2-Piece ..... Fig. 3 - 665
Shaft,Drive,Rear,3-Piece ..... Fig. 3 - 670
Shaft,Drive,Rear,3-Piece ..... Fig. 3 - 675
Shaft,Drive,Rear,3-Piece ..... Fig. 3 - 680

Rear Axle Assembly
Axle Assembly,FWD/RWD/AWD ..... Fig. 3 - 705
Axle Assembly,FWD/RWD/AWD ..... Fig. 3 - 710

Rear Axle; Housing, Differential and Vent
Housing and Vent,Rear Axle,FWD/RWD/AWD ..... Fig. 3 - 805
Differential Assembly,Rear ..... Fig. 3 - 822
Differential Assembly,Rear ..... Fig. 3 - 823
Differential Assembly,Rear ..... Fig. 3 - 824

Rear Axle Shafts
Shafts,Rear,Axle,FWD/RWD/AWD ..... Fig. 3 - 905
Shafts,Rear,Axle,FWD/RWD/AWD ..... Fig. 3 - 910

003-600 Drive Shaft	**003-700** Rear Axle Assembly	**003-800** Rear Axle; Housing, Differential and Vent	**003-900** Rear Axle Shafts

Shaft,Drive,Rear,3-Piece
Figure 3-660

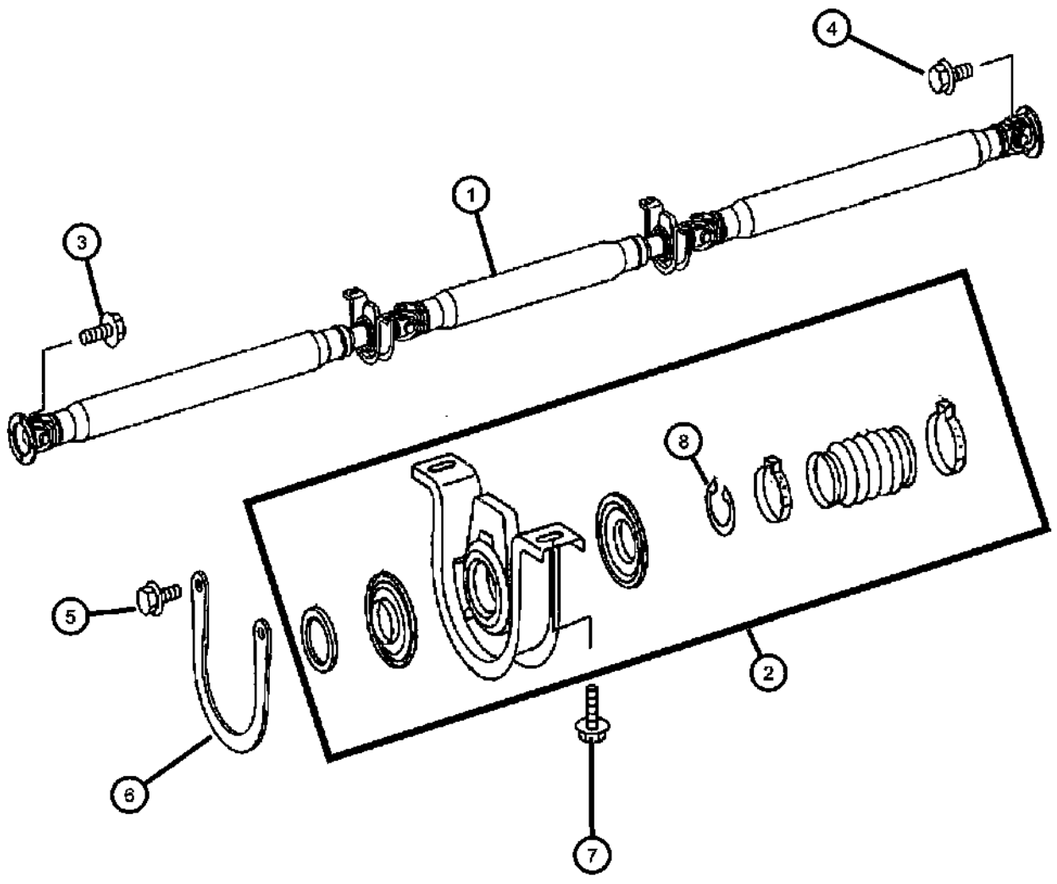

ITEM	PART NUMBER	QTY	LINE	SERIES	BODY	ENGINE	TRANS	TRIM	DESCRIPTION
1	68006632AA	1	2, 3, 6, 7	L	03, 13, 53				SHAFT, Drive, [3] Piece Drive Shaft
2	68006649AA	1	2, 3, 6, 7	L					CENTER BEARING, Drive Shaft
3	68017251AA	4	2, 3, 6, 7	L					BOLT, Drive Shaft To Transmission
4	68017251AA	4	2, 3, 6, 7	L					BOLT, Drive Shaft To Rear Axle
5	06507218AB	4	2, 3, 6, 7	L	13, 15, 17, 53, 55				SCREW, [M8x12]
6	68006655AA	2	2, 3, 6, 7	L					STRAP, Prop Shaft
7	06104235AA	4	2, 3, 6, 7	L					BOLT
8	68006651AA	1	2, 3, 6, 7	L					RING, Lock Ring

SPRINTER (VB)

SERIES	LINE	BODY	ENGINE	TRANSMISSION
L = LOWLINE	3 = HD DODGE 2WD 6 = Lt. Duty DODGE 4WD 2 = Med. Duty DODGE 2WD 7 = Med. Duty DODGE 4WD	17 = VAN WHEEL BASE 7 55 = WAGON WHEEL BASE 5 15 = VAN WHEEL BASE 5 53 = 119 WB 13 = 119 WB 05 = CAB CHASSIS WHEEL BASE 5 03 = CAB CHASSIS WHEEL BASE 3	EG2 = 3.5L V6 Gas Engine EXM = 3.0L V6 Turbo Diesel Engine	DGZ = 5-Speed Auto W5A380 Transmission

Shaft,Drive,Rear,2-Piece
Figure 3-665

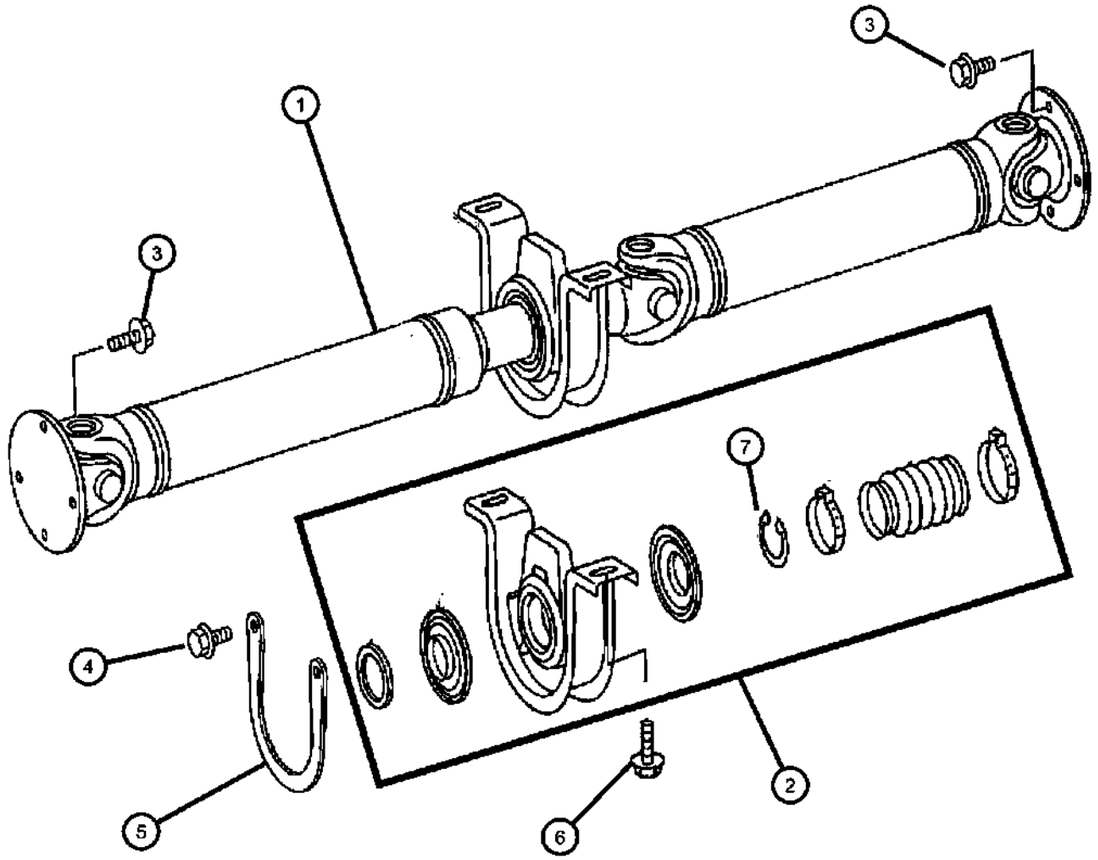

ITEM	PART NUMBER	QTY	LINE	SERIES	BODY	ENGINE	TRANS	TRIM	DESCRIPTION
1	68006622AA	1	2, 3, 6, 7	L	03, 13, 53				SHAFT, Drive
2	68006649AA	1	2, 3, 6, 7	L					CENTER BEARING, Drive Shaft
3	68017251AA	4	2, 3, 6, 7	L					BOLT, Driveshaft To Transmission
4	06507218AB	4	2, 3, 6, 7	L	13, 15, 17, 53, 55				SCREW, [M8x12]
5	68006655AA	2	2, 3, 6, 7	L					STRAP, Prop Shaft
6	06104235AA	4	2, 3, 6, 7	L					BOLT
7	68006651AA	1	2, 3, 6, 7	L					RING

SPRINTER (VB)

SERIES	LINE	BODY	ENGINE	TRANSMISSION
L = LOWLINE	3 = HD DODGE 2WD 6 = Lt. Duty DODGE 4WD 2 = Med. Duty DODGE 2WD 7 = Med. Duty DODGE 4WD	17 = VAN WHEEL BASE 7 55 = WAGON WHEEL BASE 5 15 = VAN WHEEL BASE 5 53 = 119 WB 13 = 119 WB 05 = CAB CHASSIS WHEEL BASE 5 03 = CAB CHASSIS WHEEL BASE 3	EG2 = 3.5L V6 Gas Engine EXM = 3.0L V6 Turbo Diesel Engine	DGZ = 5-Speed Auto W5A380 Transmission

Shaft,Drive,Rear,3-Piece
Figure 3-670

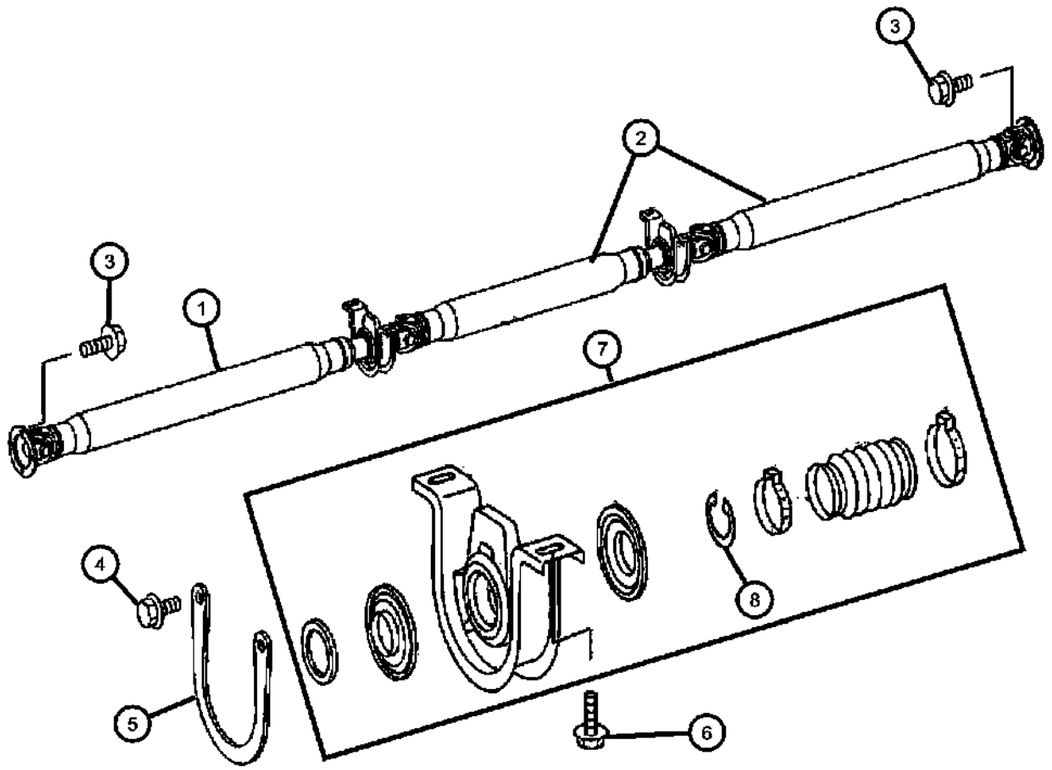

ITEM	PART NUMBER	QTY	LINE	SERIES	BODY	ENGINE	TRANS	TRIM	DESCRIPTION
1	68006641AA	1	2, 3, 6, 7	L	05, 15, 17, 55				SHAFT, DriveFront
2	68006638AA	1	2, 3, 6, 7	L	05, 15, 17, 55				SHAFT, DriveRear
3	68017251AA	4	2, 3, 6, 7	L					BOLT, Driveshaft To Transmission / Driveshaft To Rear Axle
4	06507218AB	4	2, 3, 6, 7	L	13, 15, 17, 53, 55				SCREW, [M8x12] Rebound Strap To Substructure
5	68006655AA	2	2, 3, 6, 7	L					STRAP, Prop Shaft
6	06104235AA	4	2, 3, 6, 7	L					BOLT
7	68006649AA	1	2, 3, 6, 7	L					CENTER BEARING, Drive Shaft
8	68006651AA	1	2, 3, 6, 7	L					RING

SPRINTER (VB)

SERIES	LINE	BODY	ENGINE	TRANSMISSION
L = LOWLINE	3 = HD DODGE 2WD 6 = Lt. Duty DODGE 4WD 2 = Med. Duty DODGE 2WD 7 = Med. Duty DODGE 4WD	17 = VAN WHEEL BASE 7 55 = WAGON WHEEL BASE 5 15 = VAN WHEEL BASE 5 53 = 119 WB 13 = 119 WB 05 = CAB CHASSIS WHEEL BASE 5 03 = CAB CHASSIS WHEEL BASE 3	EG2 = 3.5L V6 Gas Engine EXM = 3.0L V6 Turbo Diesel Engine	DGZ = 5-Speed Auto W5A380 Transmission

Shaft,Drive,Rear,3-Piece
Figure 3-675

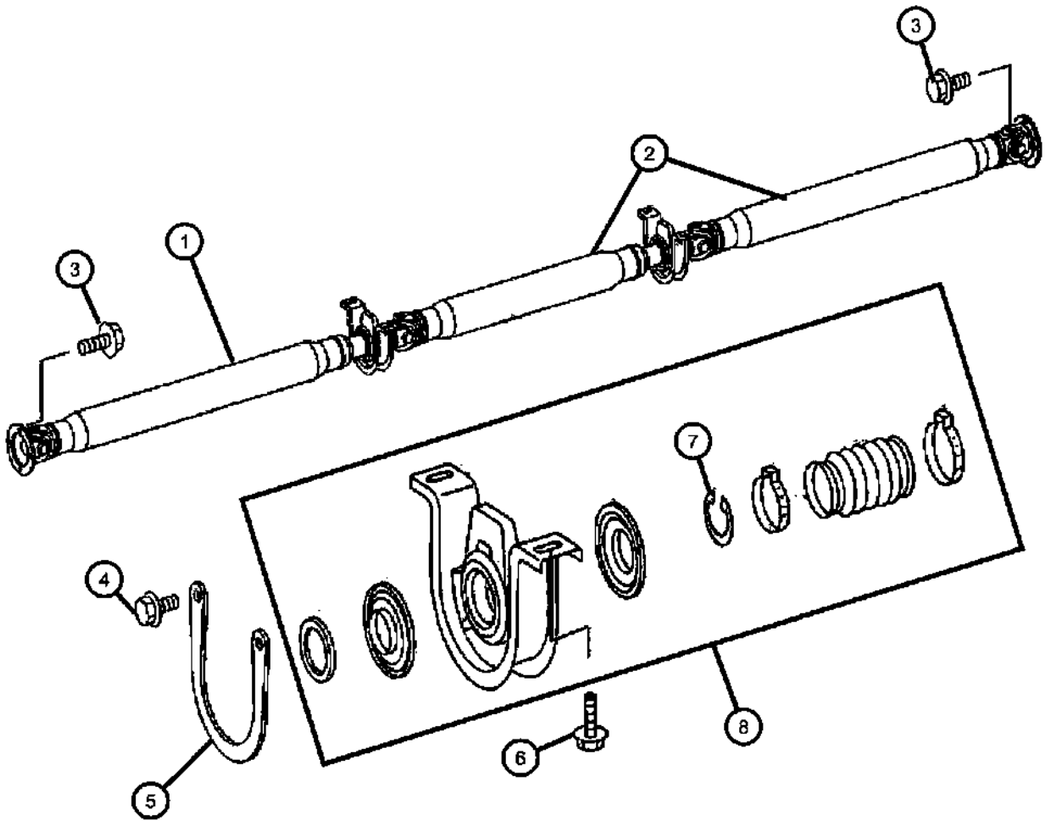

ITEM	PART NUMBER	QTY	LINE	SERIES	BODY	ENGINE	TRANS	TRIM	DESCRIPTION
1	68006640AA	1	2, 3, 6, 7	L	05, 15, 17, 55				SHAFT, DriveFront
2	68006638AA	1	2, 6	L	15, 17, 55				SHAFT, DriveRear
3	68017251AA	4	2, 3, 6, 7	L					BOLT, Driveshaft To Transmission / Driveshaft To Rear Axle
4	06507218AB	4	2, 3, 6, 7	L	13, 15, 17, 53, 55				SCREW, [M8x12] / Rebound Strap To Substructure
5	68006655AA	2	2, 3, 6, 7	L					STRAP, Prop Shaft, Rebound Strap
6	06104235AA	4	2, 3, 6, 7	L					BOLT, [M12x1.5x35 - 10.9] / Bearing To Substructure
7	68006651AA	1	2, 3, 6, 7	L					RING
8									CENTER BEARING, Drive Shaft
	68006649AA	1	2, 3, 6, 7	L					Front
	68031836AA	1	2, 6	L	15, 17, 55				Rear

SPRINTER (VB)

SERIES	LINE	BODY	ENGINE	TRANSMISSION
L = LOWLINE	3 = HD DODGE 2WD 6 = Lt. Duty DODGE 4WD 2 = Med. Duty DODGE 2WD 7 = Med. Duty DODGE 4WD	17 = VAN WHEEL BASE 7 55 = WAGON WHEEL BASE 5 15 = VAN WHEEL BASE 5 53 = 119 WB 13 = 119 WB 05 = CAB CHASSIS WHEEL BASE 5 03 = CAB CHASSIS WHEEL BASE 3	EG2 = 3.5L V6 Gas Engine EXM = 3.0L V6 Turbo Diesel Engine	DGZ = 5-Speed Auto W5A380 Transmission

Shaft,Drive,Rear,3-Piece
Figure 3-680

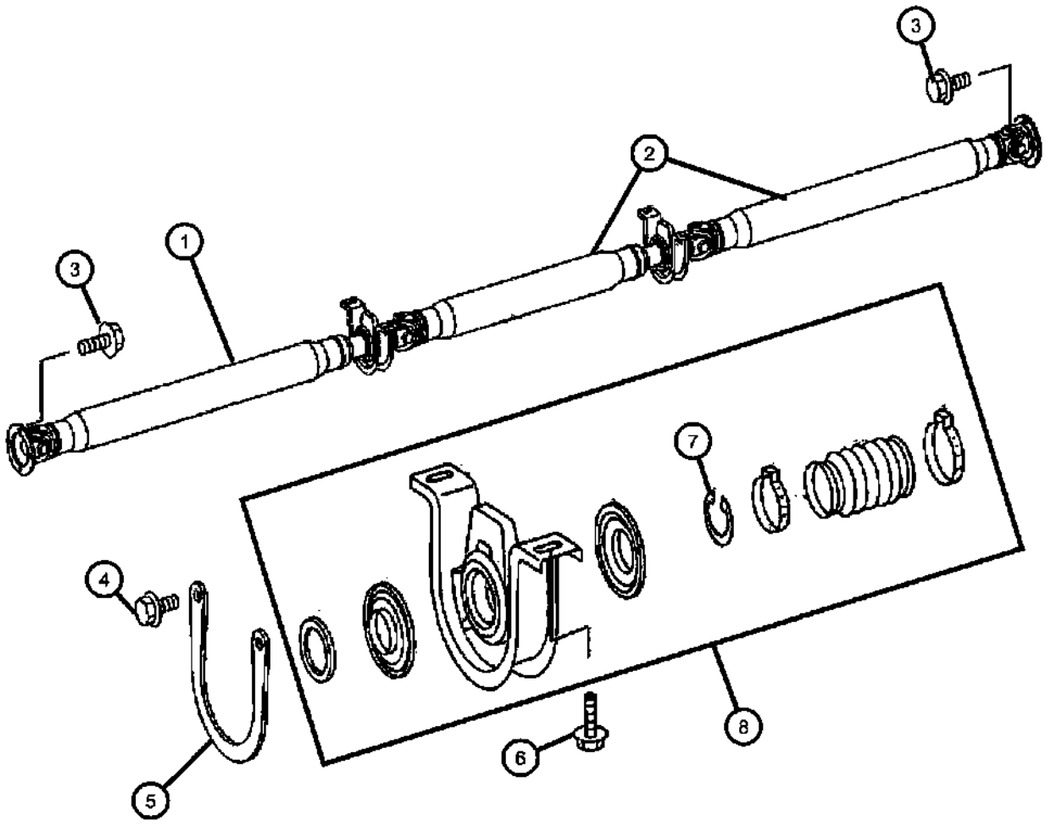

ITEM	PART NUMBER	QTY	LINE	SERIES	BODY	ENGINE	TRANS	TRIM	DESCRIPTION
1	68006640AA	1	2, 3, 6, 7	L	05, 15, 17, 55				SHAFT, DriveFront
2	68006637AA	1	3, 7	L	05, 15, 17				SHAFT, DriveRear
3	68017251AA	4	2, 3, 6, 7	L					BOLT, Driveshaft To Transmission / Driveshaft To Rear Axle
4	06507218AB	4	2, 3, 6, 7	L	13, 15, 17, 53, 55				SCREW, [M8x12] / Rebound Strap To Substructure
5	68006655AA	2	2, 3, 6, 7	L					STRAP, Prop Shaft, Rebound Strap
6	06104235AA	4	2, 3, 6, 7	L					BOLT, [M12x1.5x35 - 10.9] / Bearing To Substructure
7	68006651AA	1	2, 3, 6, 7	L					RING
8	68006649AA	1	2, 3, 6, 7	L					CENTER BEARING, Drive Shaft

SPRINTER (VB)

SERIES	LINE	BODY	ENGINE	TRANSMISSION
L = LOWLINE	3 = HD DODGE 2WD 6 = Lt. Duty DODGE 4WD 2 = Med. Duty DODGE 2WD 7 = Med. Duty DODGE 4WD	17 = VAN WHEEL BASE 7 55 = WAGON WHEEL BASE 5 15 = VAN WHEEL BASE 5 53 = 119 WB 13 = 119 WB 05 = CAB CHASSIS WHEEL BASE 5 03 = CAB CHASSIS WHEEL BASE 3	EG2 = 3.5L V6 Gas Engine EXM = 3.0L V6 Turbo Diesel Engine	DGZ = 5-Speed Auto W5A380 Transmission

Axle Assembly,FWD/RWD/AWD
Figure 3-705

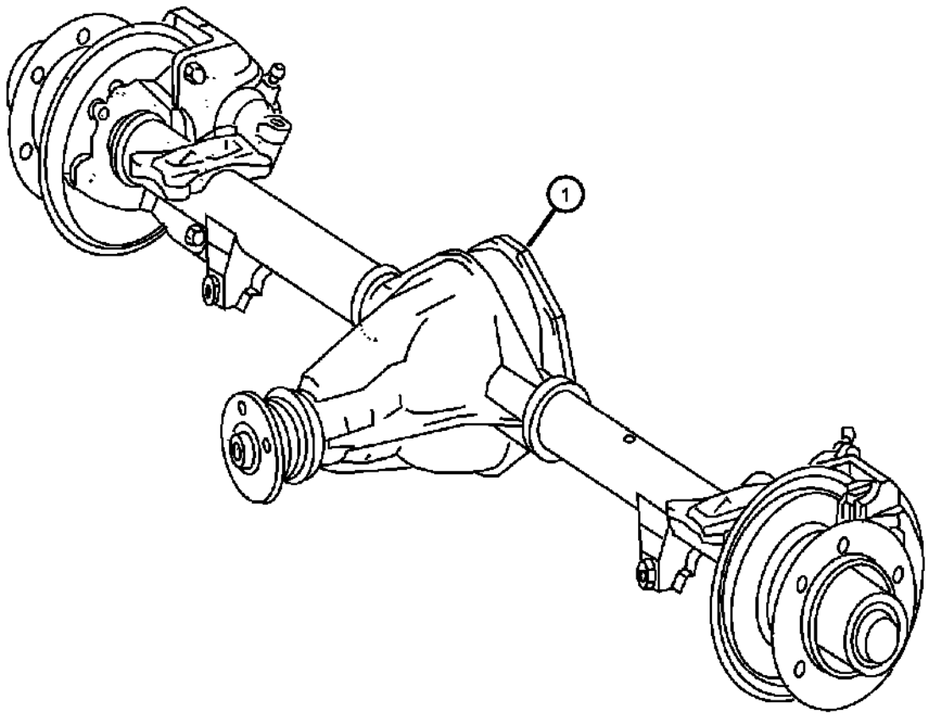

ITEM	PART NUMBER	QTY	LINE	SERIES	BODY	ENGINE	TRANS	TRIM	DESCRIPTION
NOTE:Axle Housing Is Not Serviced. If Axle Housing Is Needed, Complete Service Axle Must Be Ordered.									
Sales Codes:									
[DMF]=4.10 Axle Ratio									
[DMH]=3.92 Axle Ratio									
[DML]=5.10 Axle Ratio									
[DMN]=4.72 Axle Ratio									
1									AXLE, Service Rear, See Note:
	04862645AA	1	2, 6	L	13, 15, 17, 53, 55				With [DMH]
	04862646AA	1	2, 6	L	13, 15, 17, 53, 55				With [DMN]
	04862647AA	1	2, 6	L	13, 15, 17, 53, 55				With [DMF]
	04862648AA	1	2, 6	L	13, 15, 17, 53, 55				With [DML]

SPRINTER (VB)

SERIES	LINE	BODY	ENGINE	TRANSMISSION
L = LOWLINE	3 = HD DODGE 2WD 6 = Lt. Duty DODGE 4WD 2 = Med. Duty DODGE 2WD 7 = Med. Duty DODGE 4WD	17 = VAN WHEEL BASE 7 55 = WAGON WHEEL BASE 5 15 = VAN WHEEL BASE 5 53 = 119 WB 13 = 119 WB 05 = CAB CHASSIS WHEEL BASE 5 03 = CAB CHASSIS WHEEL BASE 3	EG2 = 3.5L V6 Gas Engine EXM = 3.0L V6 Turbo Diesel Engine	DGZ = 5-Speed Auto W5A380 Transmission

Axle Assembly,FWD/RWD/AWD
Figure 3-710

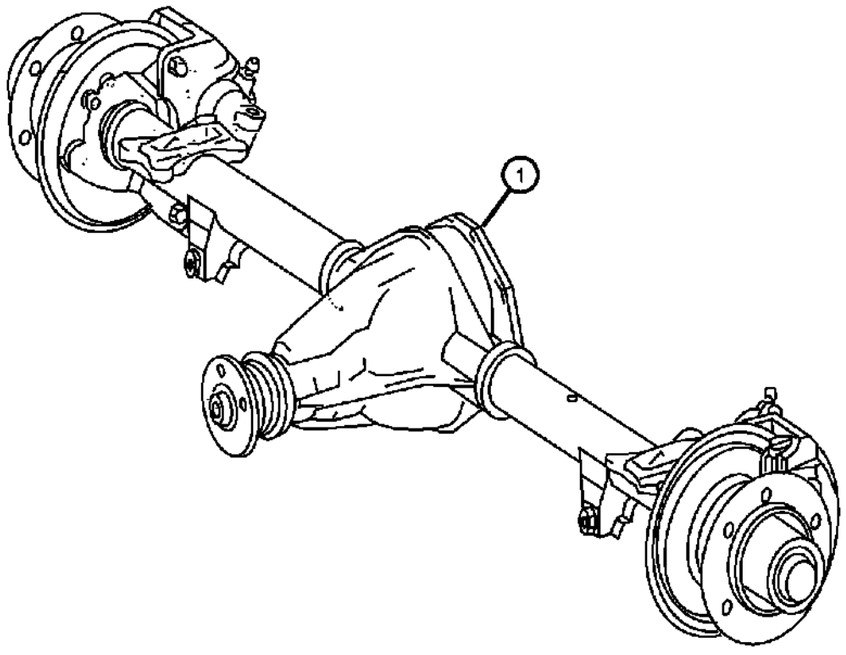

ITEM	PART NUMBER	QTY	LINE	SERIES	BODY	ENGINE	TRANS	TRIM	DESCRIPTION
NOTE:Axle Housing Is Not Serviced. If Axle Housing Is Needed, Complete Service Axle Must Be Ordered.									
Sales Codes:									
[DMF]=4.10 Axle Ratio									
[DMH]=3.92 Axle Ratio									
[DML]=5.10 Axle Ratio									
[DMN]=4.72 Axle Ratio									
1									AXLE, Service Rear
	04862649AB	1	3, 7	L	03, 05, 13, 15, 17				With [DMH]
	04862650AB	1	3, 7	L	03, 05, 13, 15, 17				With [DMF]
	04862651AB	1	3	L	05				With [DMN]
	04862652AB	1	3	L	05				With [DML]

SPRINTER (VB)

SERIES	LINE	BODY	ENGINE	TRANSMISSION
L = LOWLINE	3 = HD DODGE 2WD 6 = Lt. Duty DODGE 4WD 2 = Med. Duty DODGE 2WD 7 = Med. Duty DODGE 4WD	17 = VAN WHEEL BASE 7 55 = WAGON WHEEL BASE 5 15 = VAN WHEEL BASE 5 53 = 119 WB 13 = 119 WB 05 = CAB CHASSIS WHEEL BASE 5 03 = CAB CHASSIS WHEEL BASE 3	EG2 = 3.5L V6 Gas Engine EXM = 3.0L V6 Turbo Diesel Engine	DGZ = 5-Speed Auto W5A380 Transmission

Housing and Vent,Rear Axle,FWD/RWD/AWD
Figure 3-805

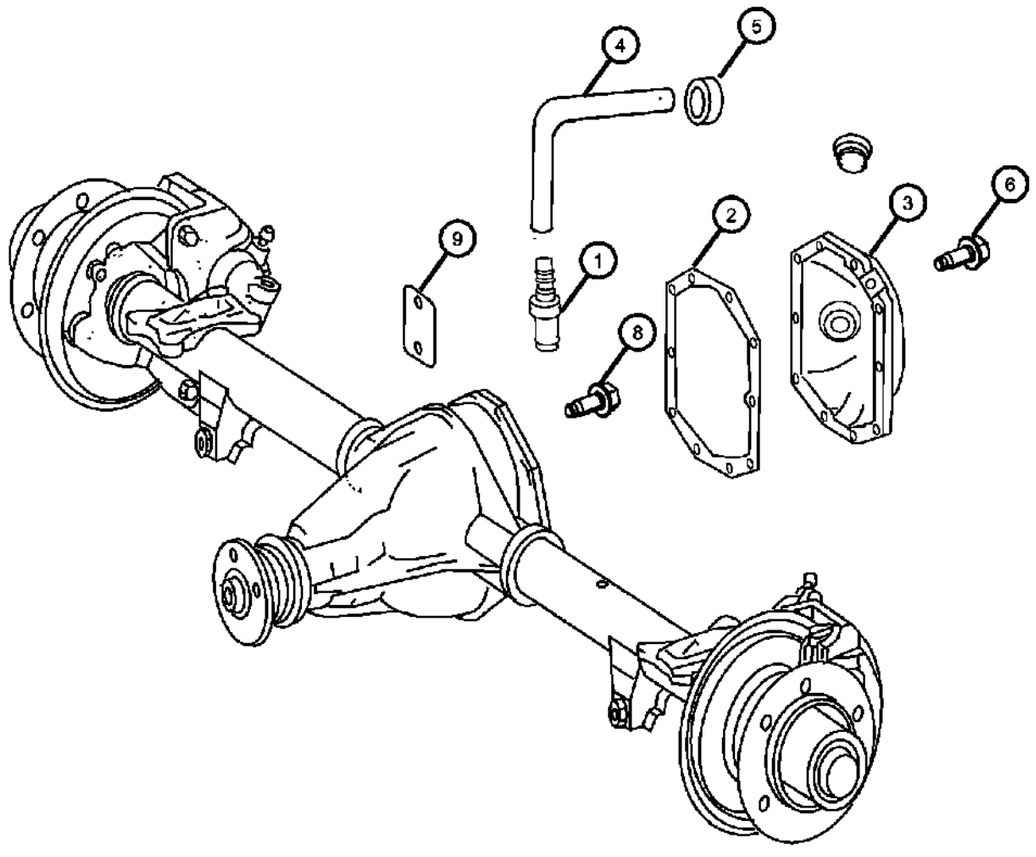

ITEM	PART NUMBER	QTY	LINE	SERIES	BODY	ENGINE	TRANS	TRIM	DESCRIPTION
1									VENT, Axle
	05103948AA	1	3, 7	L	03, 05, 13, 15, 17				
		1	2, 6	L	13, 15, 17, 53, 55				
2									GASKET, Differential Cover
	68018926AA	1	2, 6	L	13, 15, 17, 53, 55				With Special Version Number [35-504000 / 17]
	68025238AA	1	3, 7	L	03, 05, 13, 15, 17				With Special Version Number [35-504000 / 04]
3									COVER, Differential
	68018924AA	1	2, 6	L	13, 15, 17, 53, 55				
	68025233AA	1	3, 7	L					
4									HOSE, Axle Vent
	05104076AA	1	3, 7	L	03, 05				
		1	2, 3, 6, 7	L	13, 15, 17, 53, 55				
5	05133520AA	1	2, 3, 6, 7	L					GROMMET
6									BOLT, Differential Cover
	04862663AA	10	2, 6	L					With Special Version Number [35 504000/10/17] & [35 504232/06/07/09/10]
	68025239AA	1	3, 7	L	03, 05, 13, 15, 17				With Special Version Number [35 504000/04]
-7									PLUG
	05133796AA	1	2, 3, 6, 7	L					Drain Plug
	05134372AA	1	3, 7	L	03, 05, 13, 15, 17				Fill Plug
		1	2, 6	L	13, 15, 17, 53, 55				Fill Plug
8									BOLT, Hex Flange Head, M12X1.50X80.00
	06104243AA	4	3, 7	L	03, 05, 13, 15, 17				
		4	2, 6	L	13, 15, 17, 53, 55				
9		4							PLATE, Identification Information Tag Not Serviced, (NOT SERVICED)

SPRINTER (VB)

SERIES	LINE	BODY	ENGINE	TRANSMISSION
L = LOWLINE	3 = HD DODGE 2WD 6 = Lt. Duty DODGE 4WD 2 = Med. Duty DODGE 2WD 7 = Med. Duty DODGE 4WD	17 = VAN WHEEL BASE 7 55 = WAGON WHEEL BASE 5 15 = VAN WHEEL BASE 5 53 = 119 WB 13 = 119 WB 05 = CAB CHASSIS WHEEL BASE 5 03 = CAB CHASSIS WHEEL BASE 3	EG2 = 3.5L V6 Gas Engine EXM = 3.0L V6 Turbo Diesel Engine	DGZ = 5-Speed Auto W5A380 Transmission

Differential Assembly,Rear
Figure 3-822

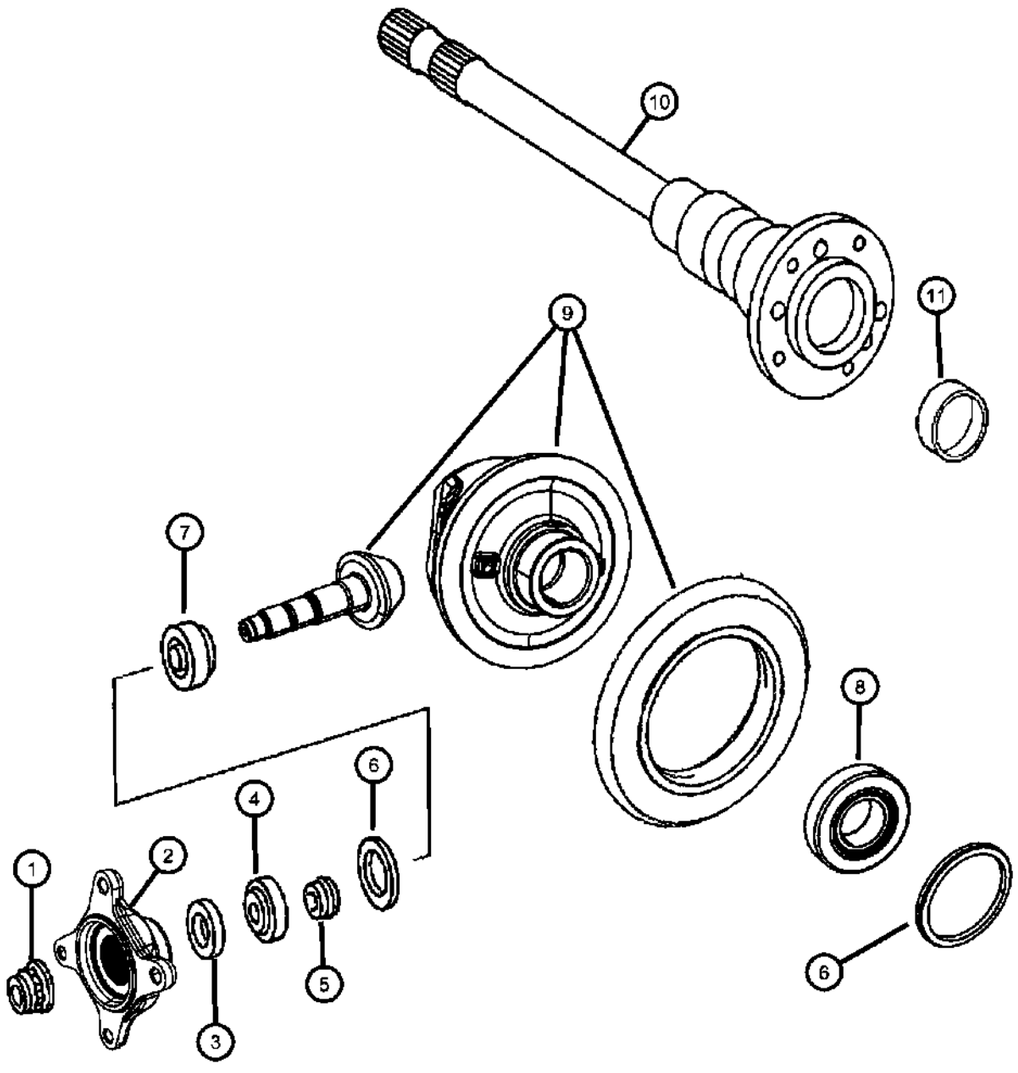

ITEM	PART NUMBER	QTY	LINE	SERIES	BODY	ENGINE	TRANS	TRIM	DESCRIPTION
NOTE:Housing, Ring & Pinion, Shims, Washers & Gears, Are Only Service In The Ring & Pinion Differential Assembly / Callout [#9] Sales Code: [DMF]=4.10 Axle Ratio [DMH]=3.92 Axle Ratio [DML]=5.10 Axle Ratio [DMN]=4.72 Axle Ratio									
1	68018934AA	1	2, 6	L	13, 15, 17, 53, 55				NUT, Pinion Yoke, With Special Version Code [35-504232 / 06 / 07 / 09 / 10]
2	68018931AA	1	2, 6	L	13, 15, 17, 53, 55				FLANGE, Center Differential, With Special Version Code [35-504232 / 06 / 07 / 09 / 10]
3	68019031AA	1	2, 6	L	13, 15, 17, 53, 55				SEAL, Differential Bearing, With Special Version Code [35-504232 / 06 / 07 / 09 / 10]
4									BEARING, Pinion Outer
	68018981AA	1	2, 6	L	13, 15, 17, 53, 55				Drive Pinion Front / With Special Version Code [35-504232 / 06 / 07 / 09 / 10] Interchangeable With [68018980AA], Outer
	68018980AA	1	2, 6	L	13, 15, 17, 53, 55				Drive Pinion Front / With Special Version Code [35-504232 / 06 / 07 / 09 / 10] Interchangeable With [68018981AA], Outer
5	68019018AA	1	2, 6	L	13, 15, 17, 53, 55				SPACER, With Special Version Code [35-504232 / 06 / 07 / 09 / 10]
6									WASHER, Differential
	68018935AA	3	2, 6	L	13, 15, 17, 53, 55				[4.90MM] With Special Version Code [35-504232 / 06 / 07 / 09 / 10]
	68018936AA	3	2, 6	L	13, 15, 17, 53, 55				[5.00MM] With Special Version Code [35-504232 / 06 / 07 / 09 / 10]
	68018938AA	3	2, 6	L	13, 15, 17, 53, 55				[5.10MM] With Special Version Code [35-504232 / 06 / 07 / 09 / 10]
	68018940AA	3	2, 6	L	13, 15, 17, 53, 55				[5.20MM] With Special Version Code [35-504232 / 06 / 07 / 09 / 10]
	68018948AA	3	2, 6	L	13, 15, 17, 53, 55				[5.30MM] With Special Version Code [35-504232 / 06 / 07 / 09 / 10]

SPRINTER (VB)

SERIES	LINE	BODY	ENGINE	TRANSMISSION
L = LOWLINE	3 = HD DODGE 2WD 6 = Lt. Duty DODGE 4WD 2 = Med. Duty DODGE 2WD 7 = Med. Duty DODGE 4WD	17 = VAN WHEEL BASE 7 55 = WAGON WHEEL BASE 5 15 = VAN WHEEL BASE 5 53 = 119 WB 13 = 119 WB 05 = CAB CHASSIS WHEEL BASE 5 03 = CAB CHASSIS WHEEL BASE 3	EG2 = 3.5L V6 Gas Engine EXM = 3.0L V6 Turbo Diesel Engine	DGZ = 5-Speed Auto W5A380 Transmission

Differential Assembly,Rear
Figure 3-822

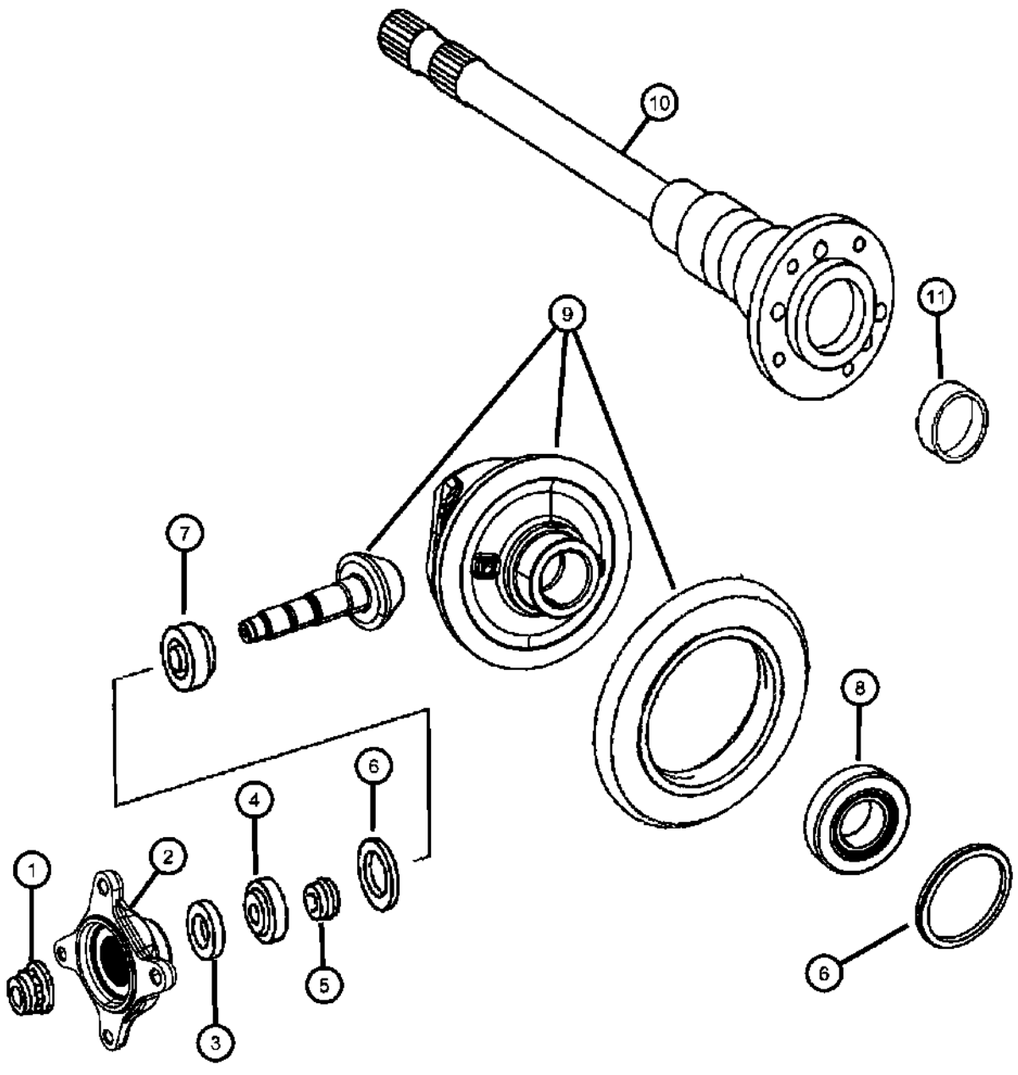

ITEM	PART NUMBER	QTY	LINE	SERIES	BODY	ENGINE	TRANS	TRIM	DESCRIPTION
	68018949AA	3	2, 6	L	13, 15, 17, 53, 55				[5.40MM] With Special Version Code [35-504232 / 06 / 07 / 09 / 10]
	68018961AA	3	2, 6	L	13, 15, 17, 53, 55				[5.50MM] With Special Version Code [35-504232 / 06 / 07 / 09 / 10]
	68018963AA	3	2, 6	L	13, 15, 17, 53, 55				[5.70MM] With Special Version Code [35-504232 / 06 / 07 / 09 / 10]
	68018964AA	3	2, 6	L	13, 15, 17, 53, 55				[5.80MM] With Special Version Code [35-504232 / 06 / 07 / 09 / 10]
	68018962AA	3	2, 6	L	13, 15, 17, 53, 55				[5.60MM] With Special Version Code [35-504232 / 06 / 07 / 09 / 10]
	68018966AA	3	2, 6	L	13, 15, 17, 53, 55				[6.00MM] With Special Version Code [35-504232 / 06 / 07 / 09 / 10]
	68018965AA	3	2, 6	L	13, 15, 17, 53, 55				[5.90MM] With Special Version Code [35-504232 / 06 / 07 / 09 / 10]
	68018969AA	3	2, 6	L	13, 15, 17, 53, 55				[6.10MM] With Special Version Code [35-504232 / 06 / 07 / 09 / 10]
	68018971AA	3	2, 6	L	13, 15, 17, 53, 55				[6.20MM] With Special Version Code [35-504232 / 06 / 07 / 09 / 10]
	68018972AA	3	2, 6	L	13, 15, 17, 53, 55				[6.30MM] With Special Version Code [35-504232 / 06 / 07 / 09 / 10]
	68018974AA	3	2, 6	L	13, 15, 17, 53, 55				[6.38MM] With Special Version Code [35-504232 / 06 / 07 / 09 / 10]
7									BEARING, Pinion Inner
	68018997AA	1	2, 6	L	13, 15, 17, 53, 55				Interchangeable With [68018998AA] / With Special Version Code [35-504232 / 06 / 07 / 09 / 10], Inner
	68018998AA	1	2, 6	L	13, 15, 17, 53, 55				Interchangeable With [68018997AA] / With Special Version Code [35-504232 / 06 / 07 / 09 / 10], Inner
8									BEARING, Axle

SPRINTER (VB)

SERIES	LINE	BODY	ENGINE	TRANSMISSION
L = LOWLINE	3 = HD DODGE 2WD 6 = Lt. Duty DODGE 4WD 2 = Med. Duty DODGE 2WD 7 = Med. Duty DODGE 4WD	17 = VAN WHEEL BASE 7 55 = WAGON WHEEL BASE 5 15 = VAN WHEEL BASE 5 53 = 119 WB 13 = 119 WB 05 = CAB CHASSIS WHEEL BASE 5 03 = CAB CHASSIS WHEEL BASE 3	EG2 = 3.5L V6 Gas Engine EXM = 3.0L V6 Turbo Diesel Engine	DGZ = 5-Speed Auto W5A380 Transmission

Differential Assembly,Rear
Figure 3-822

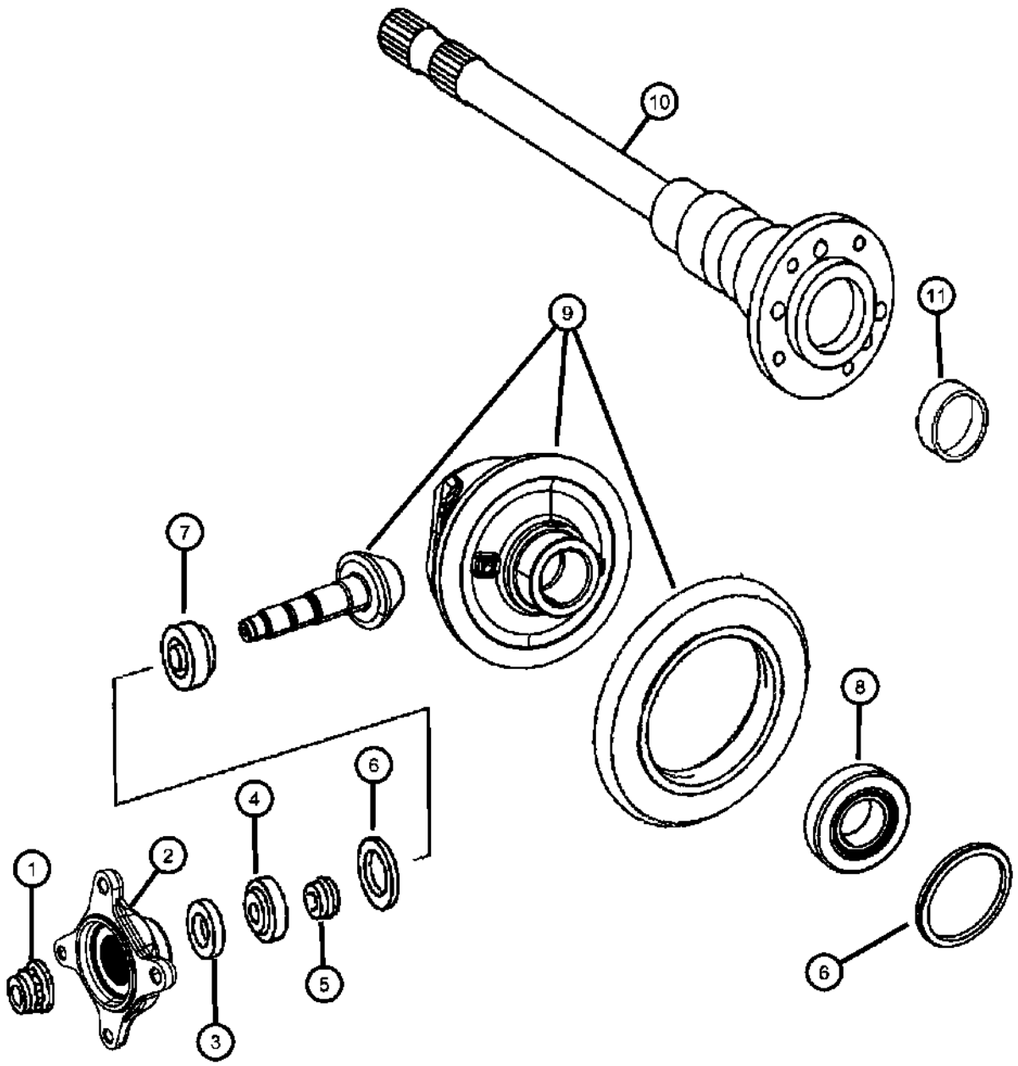

ITEM	PART NUMBER	QTY	LINE	SERIES	BODY	ENGINE	TRANS	TRIM	DESCRIPTION
	68019036AA	2	2, 6	L	13, 15, 17, 53, 55				With Special Version [35-504232 / 06 / 07 / 09 / 10] / Interchangeable With [68019039AA]
	68019039AA	2	2, 6	L	13, 15, 17, 53, 55				With Special Version [35-504232 / 06 / 07 / 09 / 10] / Interchangeable With [68019036AA]
9									DIFFERENTIAL, Rear Axle
	68019087AA	1	2, 6	L	13, 15, 17, 53, 55				With [DMH] / With Special Version Code [35-504232 / 10] / See Note
	68019064AA	1	2, 6	L	13, 15, 17, 53, 55				With [DML] / With Special Version Code [35-504232 / 06] / See Note
	68019072AA	1	2, 6	L	13, 15, 17, 53, 55				With [DMN] / With Special Version Code [35-504232 / 07] / See Note
	68019086AA	1	2, 6	L	13, 15, 17, 53, 55				With [DMF] / With Special Version Code [35-504232 / 09] / See Note
10									SHAFT, Axle
	68019095AA	1	2, 6	L	13, 15, 17, 53, 55				With Special Version Code [35-504008 / 89], Left
	68019135AA	1	2, 6	L	13, 15, 17, 53, 55				With Special Version Code [35-504008 / 89], Right
11	04862654AA	2	2, 6	L	13, 15, 17, 53, 55				PLUG, Expansion, With Special Version Code [35-504008 / 89]

SPRINTER (VB)

SERIES	LINE	BODY	ENGINE	TRANSMISSION
L = LOWLINE	3 = HD DODGE 2WD 6 = Lt. Duty DODGE 4WD 2 = Med. Duty DODGE 2WD 7 = Med. Duty DODGE 4WD	17 = VAN WHEEL BASE 7 55 = WAGON WHEEL BASE 5 15 = VAN WHEEL BASE 5 53 = 119 WB 13 = 119 WB 05 = CAB CHASSIS WHEEL BASE 5 03 = CAB CHASSIS WHEEL BASE 3	EG2 = 3.5L V6 Gas Engine EXM = 3.0L V6 Turbo Diesel Engine	DGZ = 5-Speed Auto W5A380 Transmission

Differential Assembly,Rear
Figure 3-823

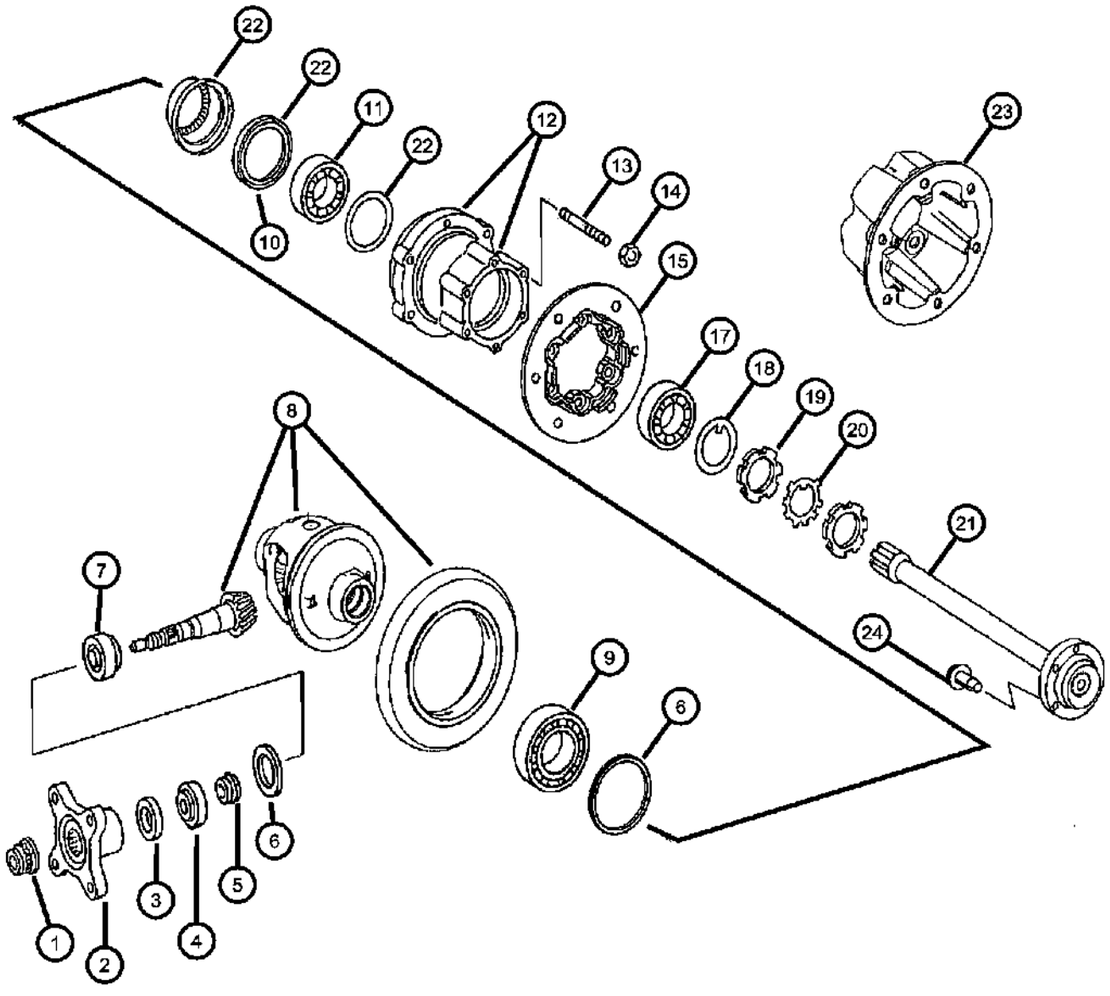

ITEM	PART NUMBER	QTY	LINE	SERIES	BODY	ENGINE	TRANS	TRIM	DESCRIPTION
NOTE:Housing, Ring & Pinion, Shims, Washers & Gears, Are Only Service In The Ring & Pinion Differential Assembly / Callout [#8]									
1	68018934AA	1	3, 7	L	03, 05, 13, 15, 17				NUT, Pinion Yoke, With Special Version Code [35-504232 / 12 / 13 / 15 / 16]
2	68018931AA	1	3, 7	L	03, 05, 13, 15, 17				FLANGE, Center Differential, With Special Version Code [35-504232 / 12 / 13 / 15 / 16]
3	68019031AA	1	3, 7	L	03, 05, 13, 15, 17				SEAL, Differential Bearing, Drive Pinion Seal / With Special Version Code [35-504232 / 12 / 13 / 15 / 16], Front
4									BEARING, Pinion Outer
	68018980AA	1	3, 7	L	03, 05, 13, 15, 17				Drive Pinion Front Bearing / Interchangeable With [68018991AA] / With Special Version Code [35-504232 / 12 / 13 / 15 / 16]
	68018981AA	1	3, 7	L	03, 05, 13, 15, 17				Drive Pinion Front Bearing / Interchangeable With [68018990AA] / With Special Version Code [35-504232 / 12 / 13 / 15 / 16]
5	68019018AA	1	3, 7	L	03, 05, 13, 15, 17				SPACER, With Special Version Code [35-504232 / 12 / 13 / 15 / 16]
6									WASHER, Differential
	68018935AA	3	3, 7	L	03, 05, 13, 15, 17				[4.90MM] Drive Pinion Rear / With Special Version Code [35-504232 / 12 / 13 / 15 / 16]
	68018936AA	3	3, 7	L	03, 05, 13, 15, 17				[5.00MM] Drive Pinion Rear / With Special Version Code [35-504232 / 12 / 13 / 15 / 16]
	68018940AA	3	3, 7	L	03, 05, 13, 15, 17				[5.20MM] Drive Pinion Rear / With Special Version Code [35-504232 / 12 / 13 / 15 / 16]
	68018948AA	3	3, 7	L	03, 05, 13, 15, 17				[5.30MM] Drive Pinion Rear / With Special Version Code [35-504232 / 12 / 13 / 15 / 16]
	68018938AA	3	3, 7	L	03, 05, 13, 15, 17				[5.10MM] Drive Pinion Rear / With Special Version Code [35-504232 / 12 / 13 / 15 / 16]
	68018961AA	3	3, 7	L	03, 05, 13, 15, 17				[5.50MM] Drive Pinion Rear / With Special Version Code [35-504232 / 12 / 13 / 15 / 16]

SPRINTER (VB)

SERIES	LINE	BODY	ENGINE	TRANSMISSION
L = LOWLINE	3 = HD DODGE 2WD 6 = Lt. Duty DODGE 4WD 2 = Med. Duty DODGE 2WD 7 = Med. Duty DODGE 4WD	17 = VAN WHEEL BASE 7 55 = WAGON WHEEL BASE 5 15 = VAN WHEEL BASE 5 53 = 119 WB 13 = 119 WB 05 = CAB CHASSIS WHEEL BASE 5 03 = CAB CHASSIS WHEEL BASE 3	EG2 = 3.5L V6 Gas Engine EXM = 3.0L V6 Turbo Diesel Engine	DGZ = 5-Speed Auto W5A380 Transmission

Differential Assembly,Rear
Figure 3-823

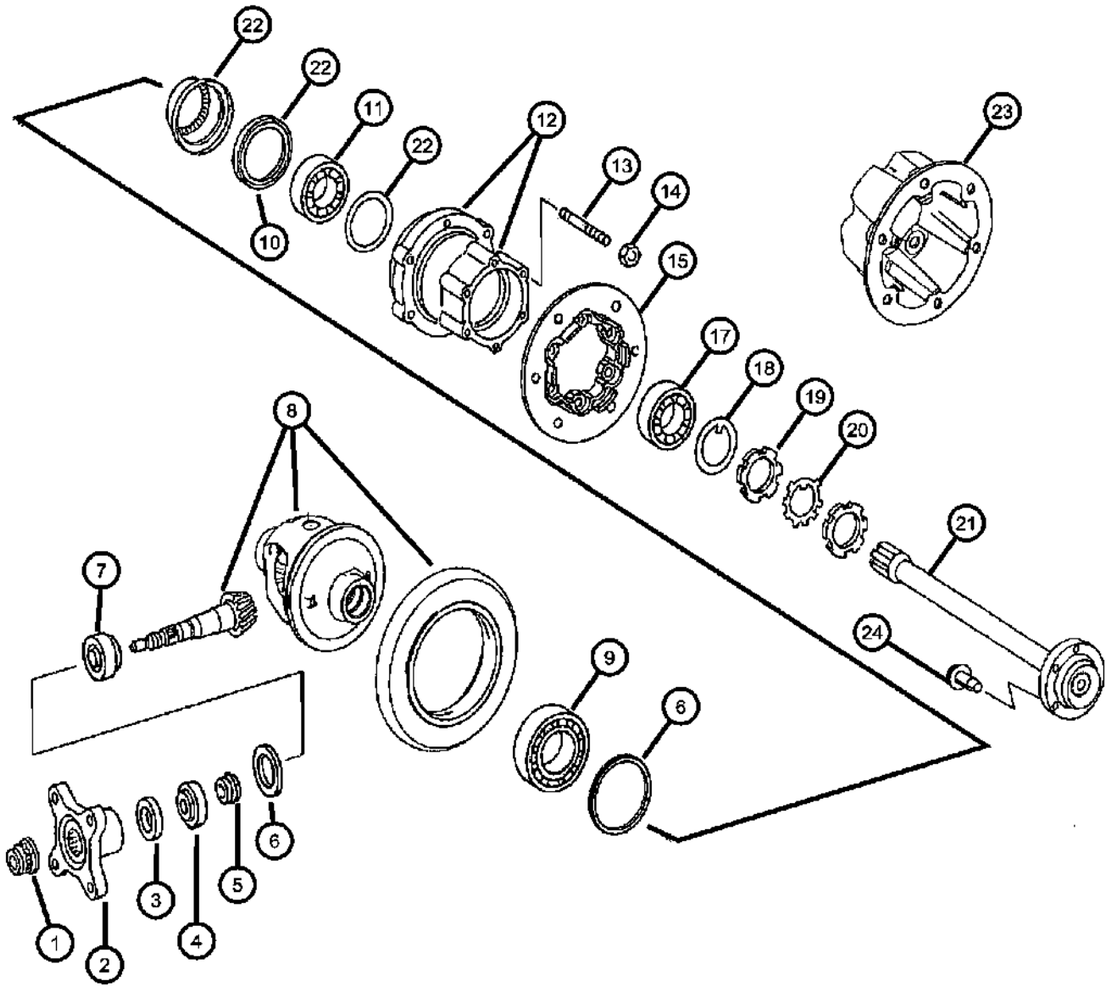

ITEM	PART NUMBER	QTY	LINE	SERIES	BODY	ENGINE	TRANS	TRIM	DESCRIPTION
	68018949AA	3	3, 7	L	03, 05, 13, 15, 17				[5.40MM] Drive Pinion Rear / With Special Version Code [35-504232 / 12 / 13 / 15 / 16]
	68018962AA	3	3, 7	L	03, 05, 13, 15, 17				[5.60MM] Drive Pinion Rear / With Special Version Code [35-504232 / 12 / 13 / 15 / 16]
	68018963AA	3	3, 7	L	03, 05, 13, 15, 17				[5.70MM] Drive Pinion Rear / With Special Version Code [35-504232 / 12 / 13 / 15 / 16]
	68018964AA	3	3, 7	L	03, 05, 13, 15, 17				[5.80MM] Drive Pinion Rear / With Special Version Code [35-504232 / 12 / 13 / 15 / 16]
	68018965AA	3	3, 7	L	03, 05, 13, 15, 17				[5.90MM] Drive Pinion Rear / With Special Version Code [35-504232 / 12 / 13 / 15 / 16]
	68018966AA	3	3, 7	L	03, 05, 13, 15, 17				[6.00MM] Drive Pinion Rear / With Special Version Code [35-504232 / 12 / 13 / 15 / 16]
	68018971AA	3	3, 7	L	03, 05, 13, 15, 17				[6.20MM] Drive Pinion Rear / With Special Version Code [35-504232 / 12 / 13 / 15 / 16]
	68018972AA	3	3, 7	L	03, 05, 13, 15, 17				[6.30MM] Drive Pinion Rear / With Special Version Code [35-504232 / 12 / 13 / 15 / 16]
	68018969AA	3	3, 7	L	03, 05, 13, 15, 17				[6.10MM] Drive Pinion Rear / With Special Version Code [35-504232 / 12 / 13 / 15 / 16]
	68018974AA	3	3, 7	L	03, 05, 13, 15, 17				[6.38MM] Drive Pinion Rear / With Special Version Code [35-504232 / 12 / 13 / 15 / 16]
7									BEARING, Pinion Inner
	68018997AA	1	3, 7	L	03, 05, 13, 15, 17				Drive Pinion Rear /Interchangeable With [68018998AA] / With Special Version Code [35-504232 / 12 / 13 / 16 / 16]
	68018998AA	1	3, 7	L	03, 05, 13, 15, 17				Drive Pinion Rear /Interchangeable With [68018997AA] / With Special Version Code [35-504232 / 12 / 13 / 16 / 16]
8									DIFFERENTIAL, Rear Axle
	68019064AA	1	3, 7	L	03, 05, 13, 15, 17				With [DML] / Special Version Code [35-504232 / 12]

SPRINTER (VB)

SERIES	LINE	BODY	ENGINE	TRANSMISSION
L = LOWLINE	3 = HD DODGE 2WD 6 = Lt. Duty DODGE 4WD 2 = Med. Duty DODGE 2WD 7 = Med. Duty DODGE 4WD	17 = VAN WHEEL BASE 7 55 = WAGON WHEEL BASE 5 15 = VAN WHEEL BASE 5 53 = 119 WB 13 = 119 WB 05 = CAB CHASSIS WHEEL BASE 5 03 = CAB CHASSIS WHEEL BASE 3	EG2 = 3.5L V6 Gas Engine EXM = 3.0L V6 Turbo Diesel Engine	DGZ = 5-Speed Auto W5A380 Transmission

Differential Assembly,Rear
Figure 3-823

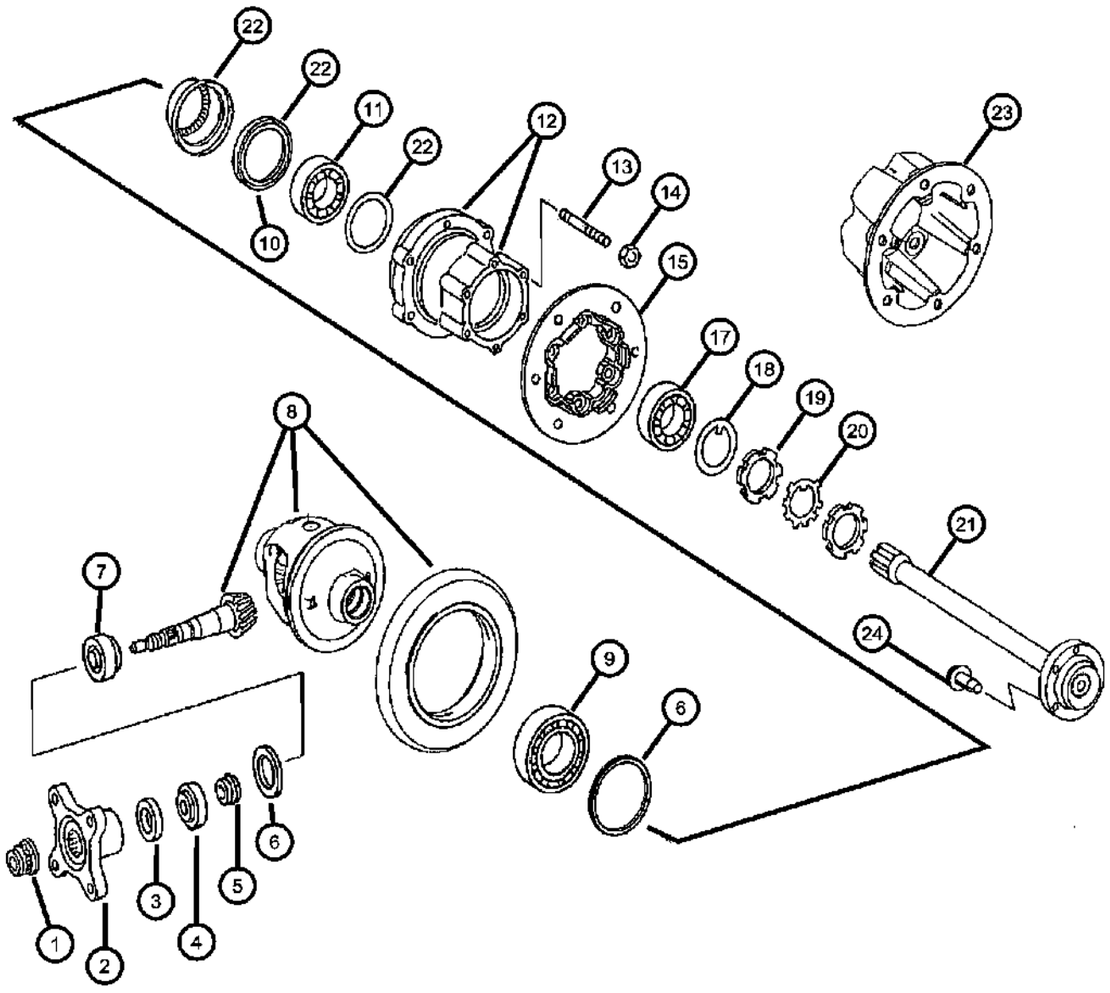

ITEM	PART NUMBER	QTY	LINE	SERIES	BODY	ENGINE	TRANS	TRIM	DESCRIPTION
	68019072AA	1	3, 7	L	03, 05, 13, 15, 17				With [DMN] / Special Version Code [35-504232 / 13]
	68019086AA	1	3, 7	L	03, 05, 13, 15, 17				With [DMF] / Special Version Code [35-504232 / 15]
	68019087AA	1	3, 7	L	03, 05, 13, 15, 17				With [DMH] / Special Version Code [35-504232 / 16]
9									BEARING, Axle
	68019036AA	2	3, 7	L	03, 05, 13, 15, 17				Interchangeable With [68019039AA] / Special Version Code [35-504232 / 12 / 13 / 15 / 16]
	68019039AA	2	3, 7	L	03, 05, 13, 15, 17				Interchangeable With [68019036AA] / Special Version Code [35-504232 / 12 / 13 / 15 / 16]
10	68026074AA	1	3, 7	L	03, 05, 13, 15, 17				SEAL, Axle Shaft, With Special Version Code [35-504019 / 69], Inner
11									BEARING, Tapered Roller
	68026071AA	1	3, 7	L	03, 05, 13, 15, 17				Interchangeable With [68026072AA & 68026073AA] / With Special Version Code [35-504019 / 69]
	68026072AA	1	3, 7	L	03, 05, 13, 15, 17				Interchangeable With [68026071AA & 68026073AA] / With Special Version Code [35-504019 / 69]
	68026073AA	1	3, 7	L	03, 05, 13, 15, 17				Interchangeable With [68026071AA & 68026072AA] / With Special Version Code [35-504019 / 69]
12									HUB, Rear Wheel
	68026067AA	1	3, 7	L	03, 05, 13, 15, 17				Interchangeable With [68026068AA] / With Special Version Code [35-504019 / 69]
	68026068AA	1	3, 7	L	03, 05, 13, 15, 17				Interchangeable With [68026067AA] / With Special Version Code [35-504019 / 69]
13	05134714AA	1	3, 7	L	03, 05, 13, 15, 17				STUD, Hub
14	05134715AA	12	3, 7	L	03, 05, 13, 15, 17				NUT, Hex Lock, With Special Version Code [35-504000 / 04]

SPRINTER (VB)

SERIES	LINE	BODY	ENGINE	TRANSMISSION
L = LOWLINE	3 = HD DODGE 2WD 6 = Lt. Duty DODGE 4WD 2 = Med. Duty DODGE 2WD 7 = Med. Duty DODGE 4WD	17 = VAN WHEEL BASE 7 55 = WAGON WHEEL BASE 5 15 = VAN WHEEL BASE 5 53 = 119 WB 13 = 119 WB 05 = CAB CHASSIS WHEEL BASE 5 03 = CAB CHASSIS WHEEL BASE 3	EG2 = 3.5L V6 Gas Engine EXM = 3.0L V6 Turbo Diesel Engine	DGZ = 5-Speed Auto W5A380 Transmission

Differential Assembly,Rear
Figure 3-823

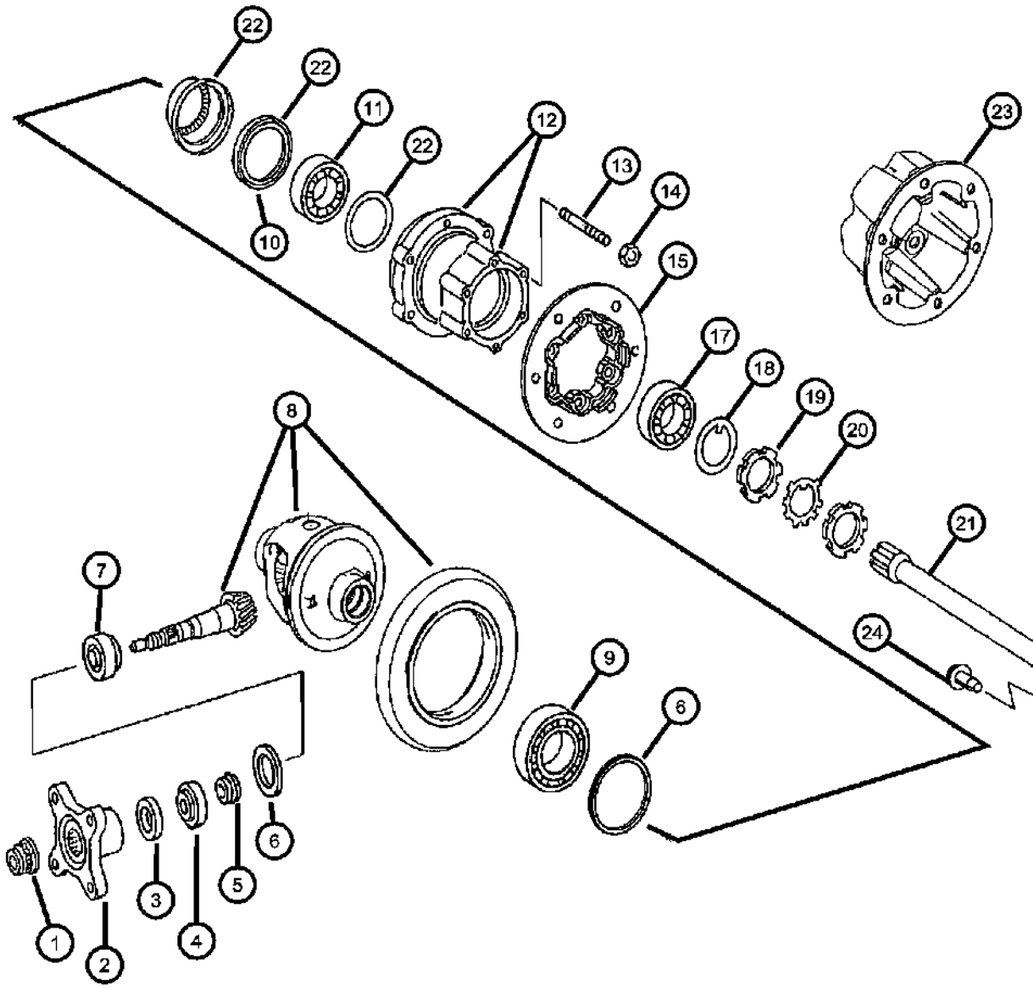

ITEM	PART NUMBER	QTY	LINE	SERIES	BODY	ENGINE	TRANS	TRIM	DESCRIPTION
15	68006710AA	2	3, 7	L	03, 05, 13, 15, 17				FLANGE, Axle Output, With Special Version Code [35-504306 / 09]
-16	04862627AA	6	3, 7	L					STUD, Wheel, Rear Axle Only. Do Not Use On Front Wheel Hubs.
17									BEARING, Tapered Roller
	68026069AA	1	3, 7	L	03, 05, 13, 15, 17				Interchangeable With [68026070AA] / With Special Version Code [35-504019 / 69], Outer
	68026070AA	1	3, 7	L	03, 05, 13, 15, 17				Interchangeable With [68026069AA] / With Special Version Code [35-504019 / 69], Outer
18	68025302AA	2	3, 7	L	03, 05, 13, 15, 17				PLATE, PLATE-LOCK, With Special Version Code [35-504000 / 04]
19	68025301AA	4	3, 7	L	03, 05, 13, 15, 17				NUT, Axle Hub, With Special Version Code [35-504000 / 04]
20	68025297AA	2	3, 7	L	03, 05, 13, 15, 17				WASHER, Axle Hub, With Special Version Code [35-504000 / 04]
21									SHAFT, Axle
	68026047AA	1	3, 7	L	03, 05, 13, 15, 17				With Special Version Code [35-504008 / 90], Left
	68026052AA	1	3, 7	L	03, 05, 13, 15, 17				With Special Version Code [35-504008 / 90], Right
22	04862662AA	2	3, 7	L	03, 05, 13, 15, 17				TONE RING, Sensor, This Includes [Tone Ring, Shaft Seal & Washer] These Parts Must Be Replaced As A Set.
23	68006710AA	2	3, 7	L	03, 05, 13, 15, 17				FLANGE, Axle Output
24	68026054AA	6	3, 7	L	03, 05, 13, 15, 17				BOLT, Hub

SPRINTER (VB)

SERIES	LINE	BODY	ENGINE	TRANSMISSION
L = LOWLINE	3 = HD DODGE 2WD 6 = Lt. Duty DODGE 4WD 2 = Med. Duty DODGE 2WD 7 = Med. Duty DODGE 4WD	17 = VAN WHEEL BASE 7 55 = WAGON WHEEL BASE 5 15 = VAN WHEEL BASE 5 53 = 119 WB 13 = 119 WB 05 = CAB CHASSIS WHEEL BASE 5 03 = CAB CHASSIS WHEEL BASE 3	EG2 = 3.5L V6 Gas Engine EXM = 3.0L V6 Turbo Diesel Engine	DGZ = 5-Speed Auto W5A380 Transmission

Differential Assembly,Rear
Figure 3-824

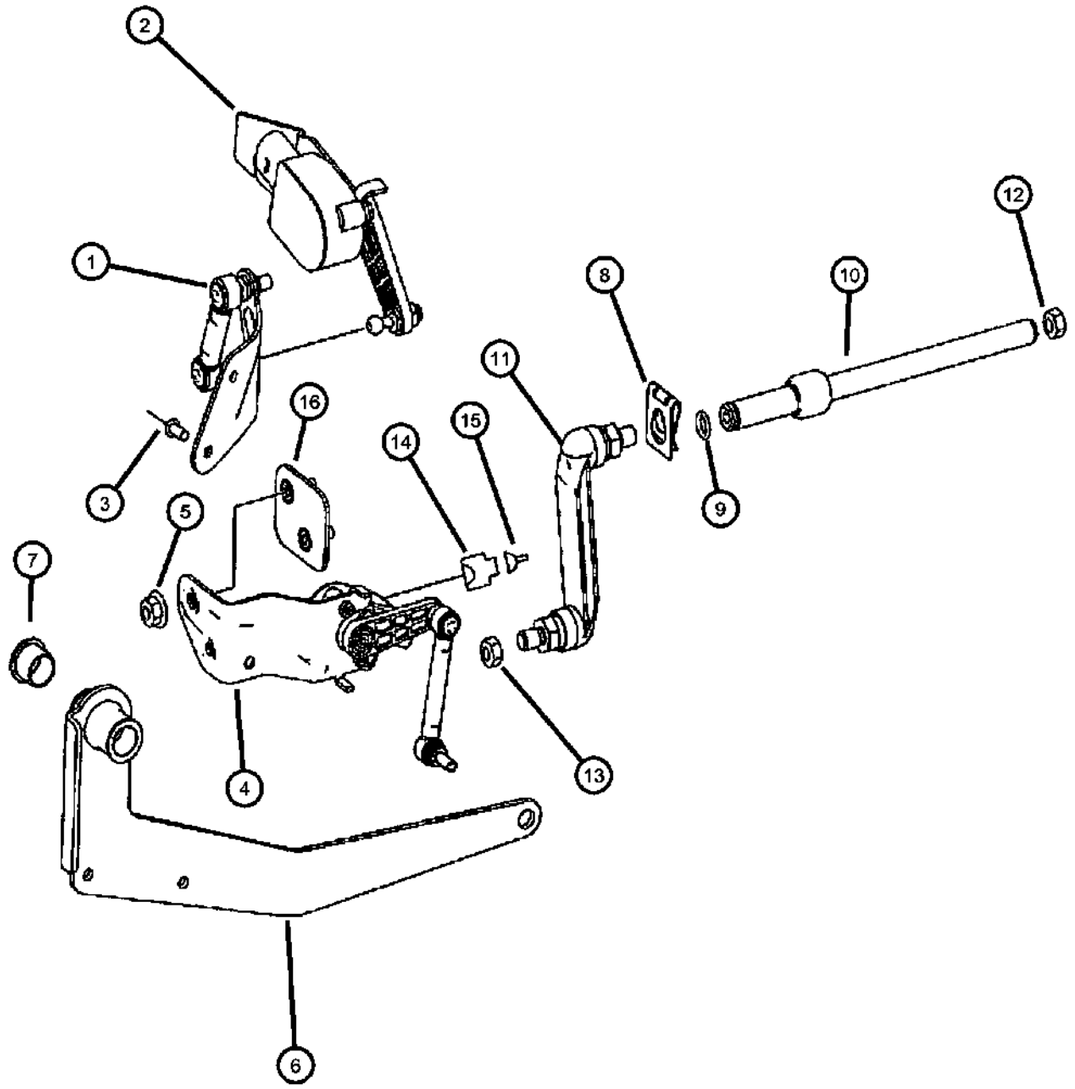

ITEM	PART NUMBER	QTY	LINE	SERIES	BODY	ENGINE	TRANS	TRIM	DESCRIPTION
1	68013738AA	1	2, 3, 6, 7	L					BRACKET, With [LM2]
2	68013739AA	1	2, 3, 6, 7	L					BRACKET, With [LM2]
3									RIVET
	05125819AA	4	3, 7	L	03, 05				
		4	2, 3, 6, 7	L	13, 15, 17, 53, 55				
4	68013834AA	1	2, 3, 6, 7	L					VALVE, Load sensing, [LM2] Altitude Sensor
5									NUT
	68004878AA	2	3, 7	L	03, 05				Sensor To Bracket [M6]
		2	2, 3, 6, 7	L	13, 15, 17, 53, 55				Sensor To Bracket [M6]
6									LEVER, Load Sensing
	05119337AA	1	3, 7	L	03, 05				
		1	2, 6	L	13, 15, 17, 53, 55				
7									BUSHING, Pedal Shaft
	05096550AA	2	3, 7	L	03, 05				
		2	2, 3, 6, 7	L	13, 15, 17, 53, 55				
8	68003170AA	1	2, 3, 6, 7	L					CLIP
9	68004877AA	1	2, 3, 6, 7	L					WASHER
10	68013836AA	1	2, 3, 6, 7	L					PIN
11	05103920AA	1	2, 3, 6, 7	L					LINK, Load Sensing, Sensor To Rear Axle
12									NUT
	06105172AA	2	3, 7	L	03, 05				Lever To Pivot Pin
		2	2, 3, 6, 7	L	13, 15, 17, 53, 55				Lever To Pivot Pin
	68004878AA	2	3, 7	L	03, 05				Lever To Bolt, Rear Axle Carrier
		2	2, 3, 6, 7	L	13, 15, 17, 53, 55				Lever To Bolt, Rear Axle Carrier
13	06105170AA	2	2, 3, 6, 7	L					NUT, Rod To Lever [M6]
14	05101431AA	1	2, 3, 6, 7	L					CONNECTOR, Rear Axle Sensor, Headlamp Range Adjustment [A51]
15	68016725AA	1	2, 3, 6, 7	L					TERMINAL, [A51] Connector
16	68013840AA	1	3, 7	L	13, 15, 17				BRACKET

SPRINTER (VB)

SERIES	LINE	BODY	ENGINE	TRANSMISSION
L = LOWLINE	3 = HD DODGE 2WD 6 = Lt. Duty DODGE 4WD 2 = Med. Duty DODGE 2WD 7 = Med. Duty DODGE 4WD	17 = VAN WHEEL BASE 7 55 = WAGON WHEEL BASE 5 15 = VAN WHEEL BASE 5 53 = 119 WB 13 = 119 WB 05 = CAB CHASSIS WHEEL BASE 5 03 = CAB CHASSIS WHEEL BASE 3	EG2 = 3.5L V6 Gas Engine EXM = 3.0L V6 Turbo Diesel Engine	DGZ = 5-Speed Auto W5A380 Transmission

Shafts,Rear,Axle,FWD/RWD/AWD
Figure 3-905

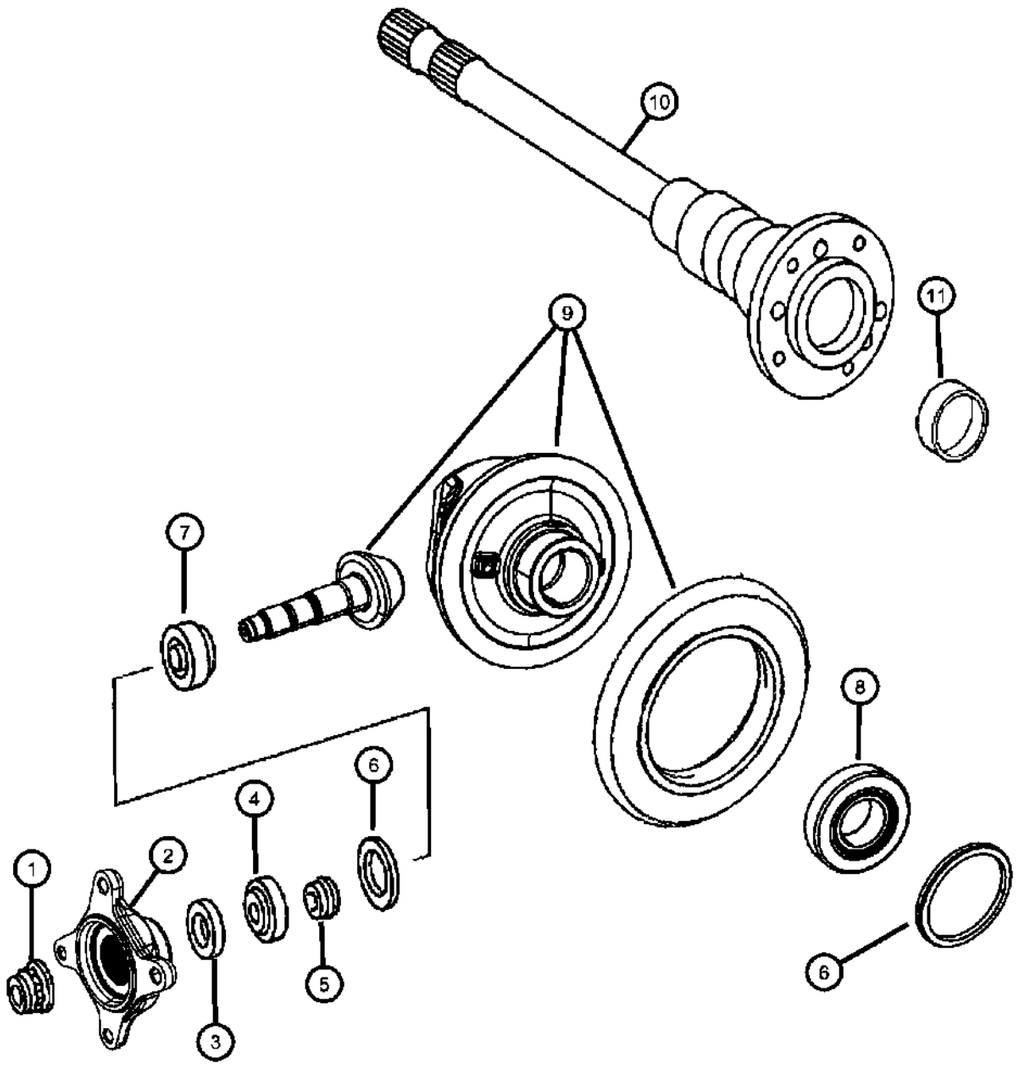

ITEM	PART NUMBER	QTY	LINE	SERIES	BODY	ENGINE	TRANS	TRIM	DESCRIPTION
NOTE:Housing, Ring & Pinion, Shims, Washers & Gears, Are Only Service In The Ring & Pinion Differential Assembly / Callout [#9] Sales Code: [DMF]=4.10 Axle Ratio [DMH]=3.92 Axle Ratio [DML]=5.10 Axle Ratio [DMN]=4.72 Axle Ratio									
1	68018934AA	1	2, 6	L	13, 15, 17, 53, 55				NUT, Pinion Yoke, With Special Version Code [35-504232 / 06 / 07 / 09 / 10]
2	68018931AA	1	2, 6	L	13, 15, 17, 53, 55				FLANGE, Center Differential, With Special Version Code [35-504232 / 06 / 07 / 09 / 10]
3	68019031AA	1	2, 6	L	13, 15, 17, 53, 55				SEAL, Differential Bearing, With Special Version Code [35-504232 / 06 / 07 / 09 / 10]
4									BEARING, Pinion Outer
	68018981AA	1	2, 6	L	13, 15, 17, 53, 55				Drive Pinion Front / With Special Version Code [35-504232 / 06 / 07 / 09 / 10] Interchangeable With [68018980AA], Outer
	68018980AA	1	2, 6	L	13, 15, 17, 53, 55				Drive Pinion Front / With Special Version Code [35-504232 / 06 / 07 / 09 / 10] Interchangeable With [68018981AA], Outer
5	68019018AA	1	2, 6	L	13, 15, 17, 53, 55				SPACER, With Special Version Code [35-504232 / 06 / 07 / 09 / 10]
6									WASHER, Differential
	68018936AA	3	2, 6	L	13, 15, 17, 53, 55				[5.00MM] With Special Version Code [35-504232 / 06 / 07 / 09 / 10]
	68018935AA	3	2, 6	L	13, 15, 17, 53, 55				[4.90MM] With Special Version Code [35-504232 / 06 / 07 / 09 / 10]
	68018948AA	3	2, 6	L	13, 15, 17, 53, 55				[5.30MM] With Special Version Code [35-504232 / 06 / 07 / 09 / 10]
	68018938AA	3	2, 6	L	13, 15, 17, 53, 55				[5.10MM] With Special Version Code [35-504232 / 06 / 07 / 09 / 10]
	68018940AA	3	2, 6	L	13, 15, 17, 53, 55				[5.20MM] With Special Version Code [35-504232 / 06 / 07 / 09 / 10]

SPRINTER (VB)

SERIES	LINE	BODY	ENGINE	TRANSMISSION
L = LOWLINE	3 = HD DODGE 2WD 6 = Lt. Duty DODGE 4WD 2 = Med. Duty DODGE 2WD 7 = Med. Duty DODGE 4WD	17 = VAN WHEEL BASE 7 55 = WAGON WHEEL BASE 5 15 = VAN WHEEL BASE 5 53 = 119 WB 13 = 119 WB 05 = CAB CHASSIS WHEEL BASE 5 03 = CAB CHASSIS WHEEL BASE 3	EG2 = 3.5L V6 Gas Engine EXM = 3.0L V6 Turbo Diesel Engine	DGZ = 5-Speed Auto W5A380 Transmission

Shafts,Rear,Axle,FWD/RWD/AWD
Figure 3-905

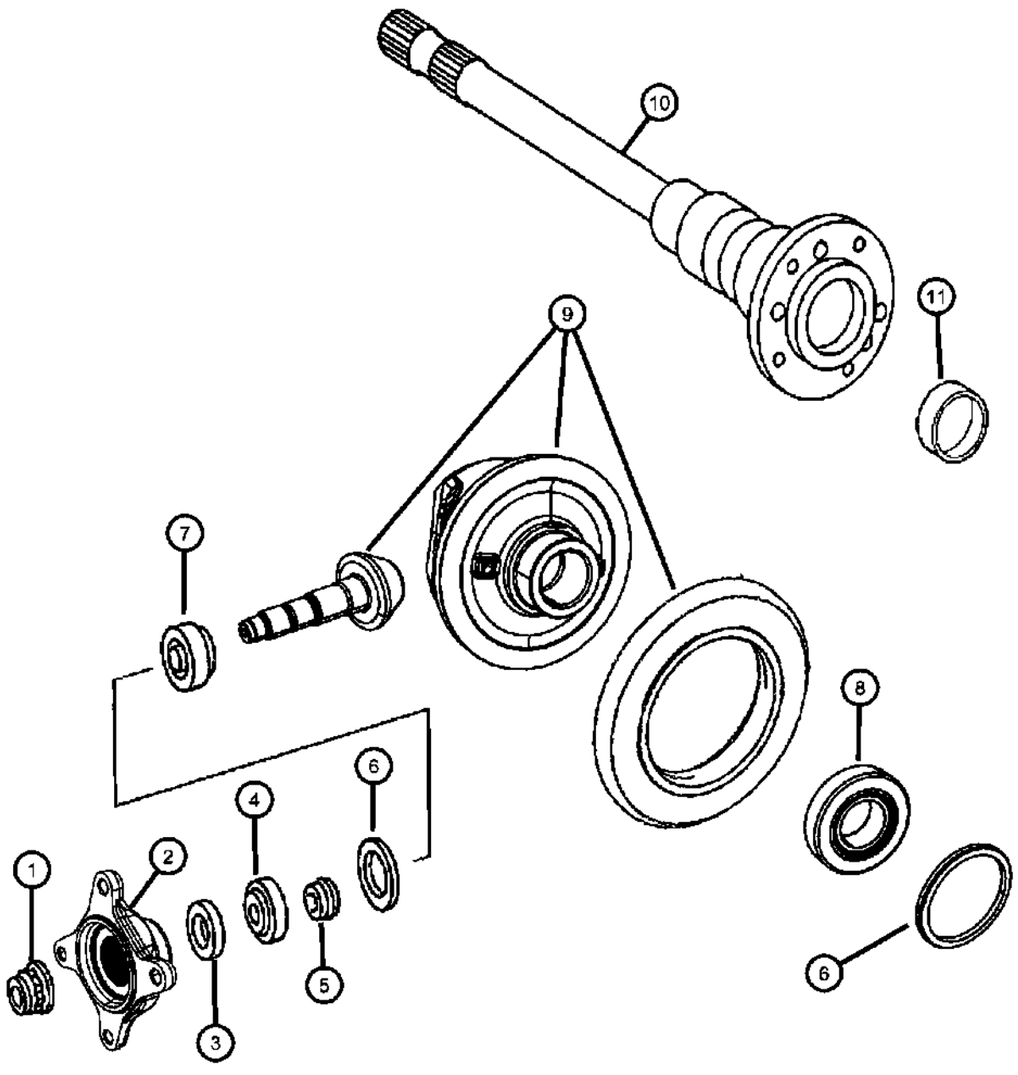

ITEM	PART NUMBER	QTY	LINE	SERIES	BODY	ENGINE	TRANS	TRIM	DESCRIPTION
	68018949AA	3	2, 6	L	13, 15, 17, 53, 55				[5.40MM] With Special Version Code [35-504232 / 06 / 07 / 09 / 10]
	68018961AA	3	2, 6	L	13, 15, 17, 53, 55				[5.50MM] With Special Version Code [35-504232 / 06 / 07 / 09 / 10]
	68018962AA	3	2, 6	L	13, 15, 17, 53, 55				[5.60MM] With Special Version Code [35-504232 / 06 / 07 / 09 / 10]
	68018963AA	3	2, 6	L	13, 15, 17, 53, 55				[5.70MM] With Special Version Code [35-504232 / 06 / 07 / 09 / 10]
	68018964AA	3	2, 6	L	13, 15, 17, 53, 55				[5.80MM] With Special Version Code [35-504232 / 06 / 07 / 09 / 10]
	68018966AA	3	2, 6	L	13, 15, 17, 53, 55				[6.00MM] With Special Version Code [35-504232 / 06 / 07 / 09 / 10]
	68018965AA	3	2, 6	L	13, 15, 17, 53, 55				[5.90MM] With Special Version Code [35-504232 / 06 / 07 / 09 / 10]
	68018972AA	3	2, 6	L	13, 15, 17, 53, 55				[6.30MM] With Special Version Code [35-504232 / 06 / 07 / 09 / 10]
	68018969AA	3	2, 6	L	13, 15, 17, 53, 55				[6.10MM] With Special Version Code [35-504232 / 06 / 07 / 09 / 10]
	68018971AA	3	2, 6	L	13, 15, 17, 53, 55				[6.20MM] With Special Version Code [35-504232 / 06 / 07 / 09 / 10]
	68018974AA	3	2, 6	L	13, 15, 17, 53, 55				[6.38MM] With Special Version Code [35-504232 / 06 / 07 / 09 / 10]
7									BEARING, Pinion Inner
	68018997AA	1	2, 6	L	13, 15, 17, 53, 55				Interchangeable With [68018998AA] / With Special Version Code [35-504232 / 06 / 07 / 09 / 10], Inner
	68018998AA	1	2, 6	L	13, 15, 17, 53, 55				Interchangeable With [68018997AA] / With Special Version Code [35-504232 / 06 / 07 / 09 / 10], Inner
8									BEARING, Axle

SPRINTER (VB)

SERIES	LINE	BODY	ENGINE	TRANSMISSION
L = LOWLINE	3 = HD DODGE 2WD 6 = Lt. Duty DODGE 4WD 2 = Med. Duty DODGE 2WD 7 = Med. Duty DODGE 4WD	17 = VAN WHEEL BASE 7 55 = WAGON WHEEL BASE 5 15 = VAN WHEEL BASE 5 53 = 119 WB 13 = 119 WB 05 = CAB CHASSIS WHEEL BASE 5 03 = CAB CHASSIS WHEEL BASE 3	EG2 = 3.5L V6 Gas Engine EXM = 3.0L V6 Turbo Diesel Engine	DGZ = 5-Speed Auto W5A380 Transmission

Shafts,Rear,Axle,FWD/RWD/AWD
Figure 3-905

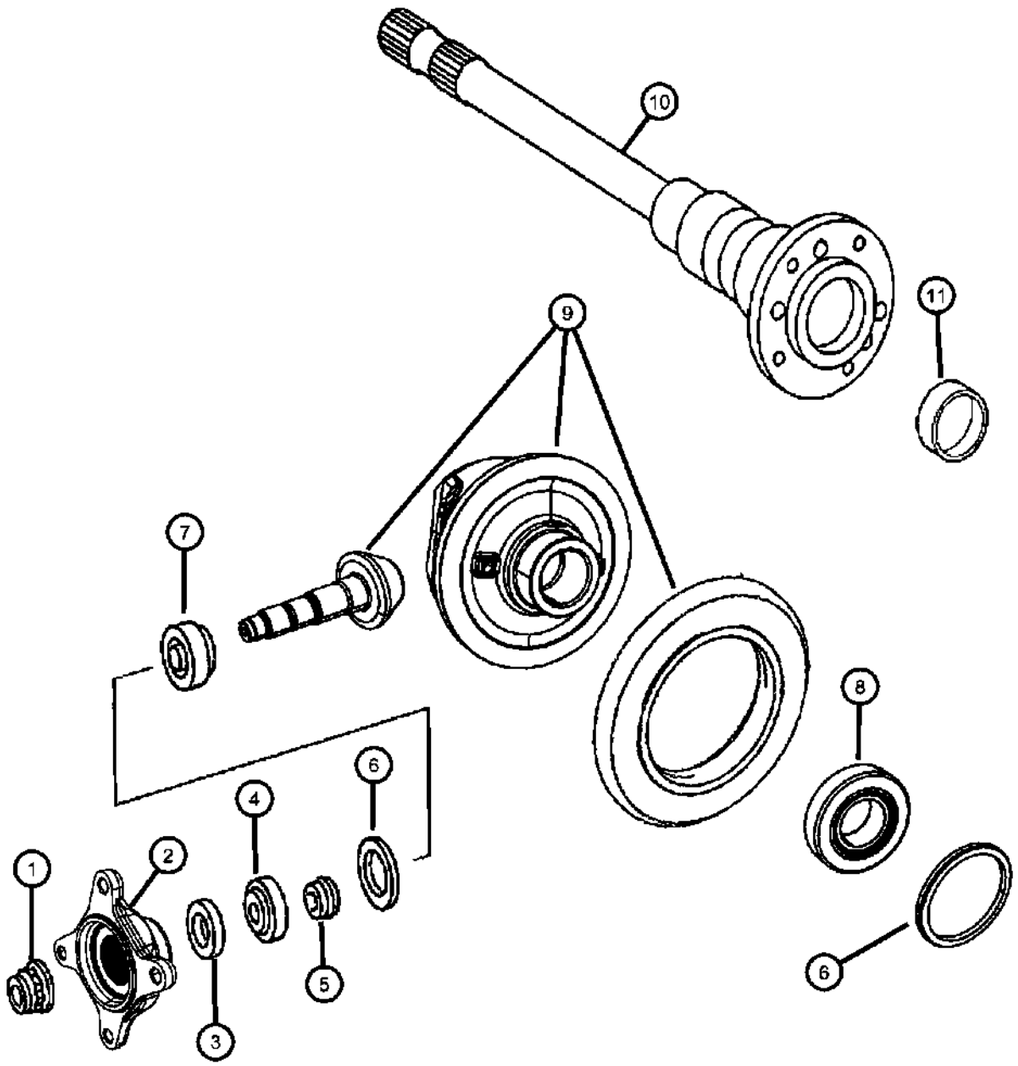

ITEM	PART NUMBER	QTY	LINE	SERIES	BODY	ENGINE	TRANS	TRIM	DESCRIPTION
	68019036AA	2	2, 6	L	13, 15, 17, 53, 55				With Special Version [35-504232 / 06 / 07 / 09 / 10] / Interchangeable With [68019039AA]
	68019039AA	2	2, 6	L	13, 15, 17, 53, 55				With Special Version [35-504232 / 06 / 07 / 09 / 10] / Interchangeable With [68019036AA]
9									DIFFERENTIAL, Rear Axle
	68019064AA	1	2, 6	L	13, 15, 17, 53, 55				With [DML] / With Special Version Code [35-504232 / 06] / See Note
	68019072AA	1	2, 6	L	13, 15, 17, 53, 55				With [DMN] / With Special Version Code [35-504232 / 07] / See Note
	68019086AA	1	2, 6	L	13, 15, 17, 53, 55				With [DMF] / With Special Version Code [35-504232 / 09] / See Note
	68019087AA	1	2, 6	L	13, 15, 17, 53, 55				With [DMH] / With Special Version Code [35-504232 / 10] / See Note
10									SHAFT, Axle
	68019095AA	1	2, 6	L	13, 15, 17, 53, 55				With Special Version Code [35-504008 / 89], Left
	68019135AA	1	2, 6	L	13, 15, 17, 53, 55				With Special Version Code [35-504008 / 89], Right
11	04862654AA	2	2, 6	L	13, 15, 17, 53, 55				PLUG, Expansion, With Special Version Code [35-504008 / 89]

SPRINTER (VB)

SERIES	LINE	BODY	ENGINE	TRANSMISSION
L = LOWLINE	3 = HD DODGE 2WD 6 = Lt. Duty DODGE 4WD 2 = Med. Duty DODGE 2WD 7 = Med. Duty DODGE 4WD	17 = VAN WHEEL BASE 7 55 = WAGON WHEEL BASE 5 15 = VAN WHEEL BASE 5 53 = 119 WB 13 = 119 WB 05 = CAB CHASSIS WHEEL BASE 5 03 = CAB CHASSIS WHEEL BASE 3	EG2 = 3.5L V6 Gas Engine EXM = 3.0L V6 Turbo Diesel Engine	DGZ = 5-Speed Auto W5A380 Transmission

Shafts,Rear,Axle,FWD/RWD/AWD
Figure 3-910

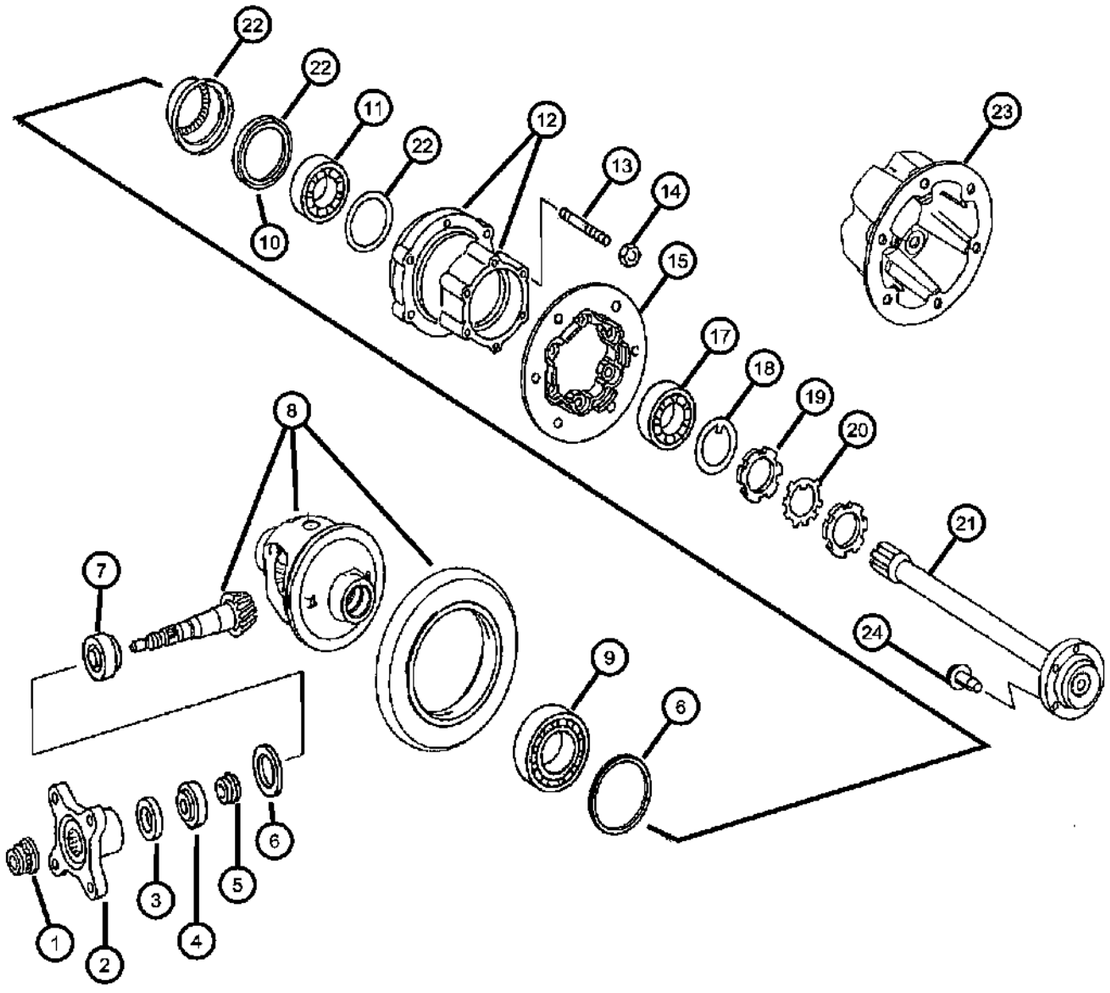

ITEM	PART NUMBER	QTY	LINE	SERIES	BODY	ENGINE	TRANS	TRIM	DESCRIPTION
NOTE:Housing, Ring & Pinion, Shims, Washers & Gears, Are Only Service In The Ring & Pinion Differential Assembly / Callout [#8]									
1	68018934AA	1	3, 7	L	03, 05, 13, 15, 17				NUT, Pinion Yoke, With Special Version Code [35-504232 / 12 / 13 / 15 / 16]
2	68018931AA	1	3, 7	L	03, 05, 13, 15, 17				FLANGE, Center Differential, With Special Version Code [35-504232 / 12 / 13 / 15 / 16]
3	68019031AA	1	3, 7	L	03, 05, 13, 15, 17				SEAL, Differential Bearing, Drive Pinion Seal / With Special Version Code [35-504232 / 12 / 13 / 15 / 16], Front
4									BEARING, Pinion Outer
	68018980AA	1	3, 7	L	03, 05, 13, 15, 17				Drive Pinion Front Bearing / Interchangeable With [68018991AA] / With Special Version Code [35-504232 / 12 / 13 / 15 / 16]
	68018981AA	1	3, 7	L	03, 05, 13, 15, 17				Drive Pinion Front Bearing / Interchangeable With [68018990AA] / With Special Version Code [35-504232 / 12 / 13 / 15 / 16]
5	68019018AA	1	3, 7	L	03, 05, 13, 15, 17				SPACER, With Special Version Code [35-504232 / 12 / 13 / 15 / 16]
6									WASHER, Differential
	68018935AA	3	3, 7	L	03, 05, 13, 15, 17				[4.90MM] Drive Pinion Rear / With Special Version Code [35-504232 / 12 / 13 / 15 / 16]
	68018936AA	3	3, 7	L	03, 05, 13, 15, 17				[5.00MM] Drive Pinion Rear / With Special Version Code [35-504232 / 12 / 13 / 15 / 16]
	68018938AA	3	3, 7	L	03, 05, 13, 15, 17				[5.10MM] Drive Pinion Rear / With Special Version Code [35-504232 / 12 / 13 / 15 / 16]
	68018940AA	3	3, 7	L	03, 05, 13, 15, 17				[5.20MM] Drive Pinion Rear / With Special Version Code [35-504232 / 12 / 13 / 15 / 16]
	68018948AA	3	3, 7	L	03, 05, 13, 15, 17				[5.30MM] Drive Pinion Rear / With Special Version Code [35-504232 / 12 / 13 / 15 / 16]
	68018961AA	3	3, 7	L	03, 05, 13, 15, 17				[5.50MM] Drive Pinion Rear / With Special Version Code [35-504232 / 12 / 13 / 15 / 16]

SPRINTER (VB)

SERIES	LINE	BODY	ENGINE	TRANSMISSION
L = LOWLINE	3 = HD DODGE 2WD 6 = Lt. Duty DODGE 4WD 2 = Med. Duty DODGE 2WD 7 = Med. Duty DODGE 4WD	17 = VAN WHEEL BASE 7 55 = WAGON WHEEL BASE 5 15 = VAN WHEEL BASE 5 53 = 119 WB 13 = 119 WB 05 = CAB CHASSIS WHEEL BASE 5 03 = CAB CHASSIS WHEEL BASE 3	EG2 = 3.5L V6 Gas Engine EXM = 3.0L V6 Turbo Diesel Engine	DGZ = 5-Speed Auto W5A380 Transmission

Shafts,Rear,Axle,FWD/RWD/AWD
Figure 3-910

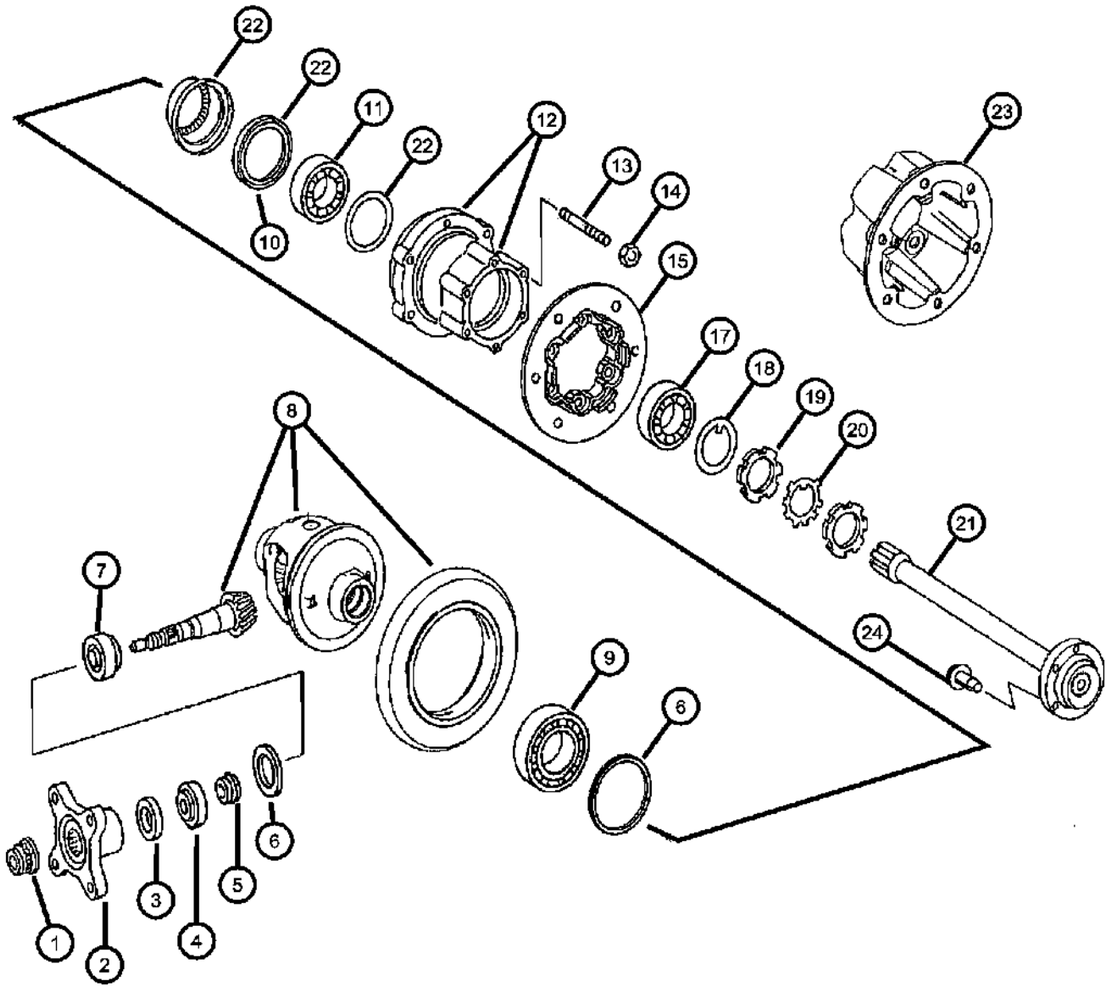

ITEM	PART NUMBER	QTY	LINE	SERIES	BODY	ENGINE	TRANS	TRIM	DESCRIPTION
	68018949AA	3	3, 7	L	03, 05, 13, 15, 17				[5.40MM] Drive Pinion Rear / With Special Version Code [35-504232 / 12 / 13 / 15 / 16]
	68018964AA	3	3, 7	L	03, 05, 13, 15, 17				[5.80MM] Drive Pinion Rear / With Special Version Code [35-504232 / 12 / 13 / 15 / 16]
	68018962AA	3	3, 7	L	03, 05, 13, 15, 17				[5.60MM] Drive Pinion Rear / With Special Version Code [35-504232 / 12 / 13 / 15 / 16]
	68018963AA	3	3, 7	L	03, 05, 13, 15, 17				[5.70MM] Drive Pinion Rear / With Special Version Code [35-504232 / 12 / 13 / 15 / 16]
	68018965AA	3	3, 7	L	03, 05, 13, 15, 17				[5.90MM] Drive Pinion Rear / With Special Version Code [35-504232 / 12 / 13 / 15 / 16]
	68018966AA	3	3, 7	L	03, 05, 13, 15, 17				[6.00MM] Drive Pinion Rear / With Special Version Code [35-504232 / 12 / 13 / 15 / 16]
	68018969AA	3	3, 7	L	03, 05, 13, 15, 17				[6.10MM] Drive Pinion Rear / With Special Version Code [35-504232 / 12 / 13 / 15 / 16]
	68018971AA	3	3, 7	L	03, 05, 13, 15, 17				[6.20MM] Drive Pinion Rear / With Special Version Code [35-504232 / 12 / 13 / 15 / 16]
	68018972AA	3	3, 7	L	03, 05, 13, 15, 17				[6.30MM] Drive Pinion Rear / With Special Version Code [35-504232 / 12 / 13 / 15 / 16]
	68018974AA	3	3, 7	L	03, 05, 13, 15, 17				[6.38MM] Drive Pinion Rear / With Special Version Code [35-504232 / 12 / 13 / 15 / 16]
7									BEARING, Pinion Inner
	68018997AA	1	3, 7	L	03, 05, 13, 15, 17				Drive Pinion Rear /Interchangeable With [68018998AA] / With Special Version Code [35-504232 / 12 / 13 / 16 / 16]
	68018998AA	1	3, 7	L	03, 05, 13, 15, 17				Drive Pinion Rear /Interchangeable With [68018997AA] / With Special Version Code [35-504232 / 12 / 13 / 16 / 16]
8									DIFFERENTIAL, Rear Axle
	68019086AA	1	3, 7	L	03, 05, 13, 15, 17				With [DMF] / Special Version Code [35-504232 / 15]

SPRINTER (VB)

SERIES	LINE	BODY	ENGINE	TRANSMISSION
L = LOWLINE	3 = HD DODGE 2WD 6 = Lt. Duty DODGE 4WD 2 = Med. Duty DODGE 2WD 7 = Med. Duty DODGE 4WD	17 = VAN WHEEL BASE 7 55 = WAGON WHEEL BASE 5 15 = VAN WHEEL BASE 5 53 = 119 WB 13 = 119 WB 05 = CAB CHASSIS WHEEL BASE 5 03 = CAB CHASSIS WHEEL BASE 3	EG2 = 3.5L V6 Gas Engine EXM = 3.0L V6 Turbo Diesel Engine	DGZ = 5-Speed Auto W5A380 Transmission

Shafts,Rear,Axle,FWD/RWD/AWD
Figure 3-910

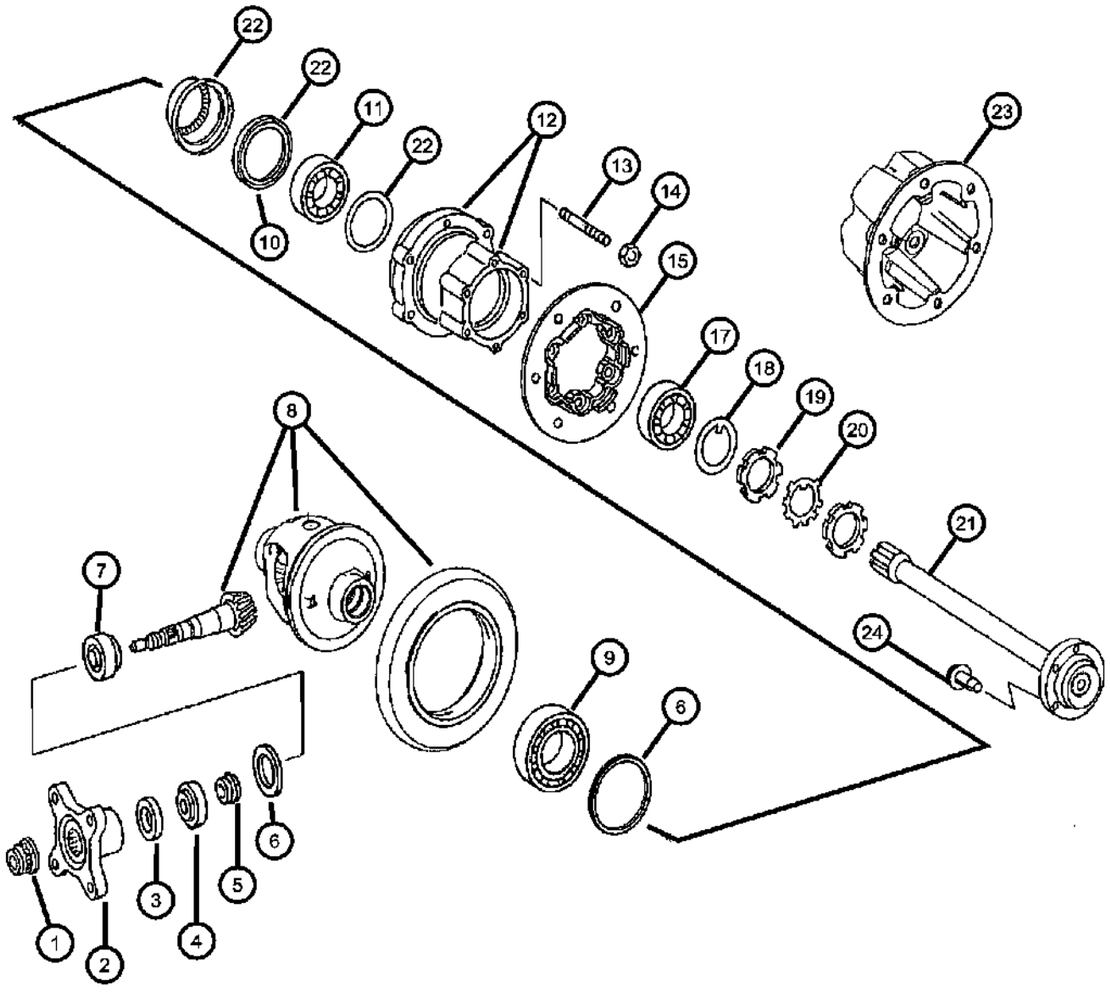

ITEM	PART NUMBER	QTY	LINE	SERIES	BODY	ENGINE	TRANS	TRIM	DESCRIPTION
	68019087AA	1	3, 7	L	03, 05, 13, 15, 17				With [DMH] / Special Version Code [35-504232 / 16]
	68019064AA	1	3, 7	L	03, 05, 13, 15, 17				With [DML] / Special Version Code [35-504232 / 12]
	68019072AA	1	3, 7	L	03, 05, 13, 15, 17				With [DMN] / Special Version Code [35-504232 / 13]
9									BEARING, Axle
	68019036AA	2	3, 7	L	03, 05, 13, 15, 17				Interchangeable With [68019039AA] / Special Version Code [35-504232 / 12 / 13 / 15 / 16]
	68019039AA	2	3, 7	L	03, 05, 13, 15, 17				Interchangeable With [68019036AA] / Special Version Code [35-504232 / 12 / 13 / 15 / 16]
10	68026074AA	1	3, 7	L	03, 05, 13, 15, 17				SEAL, Axle Shaft, With Special Version Code [35-504019 / 69], Inner
11									BEARING, Tapered Roller
	68026073AA	1	3, 7	L	03, 05, 13, 15, 17				Interchangeable With [68026071AA & 68026072AA] / With Special Version Code [35-504019 / 69]
	68026071AA	1	3, 7	L	03, 05, 13, 15, 17				Interchangeable With [68026072AA & 68026073AA] / With Special Version Code [35-504019 / 69]
	68026072AA	1	3, 7	L	03, 05, 13, 15, 17				Interchangeable With [68026071AA & 68026073AA] / With Special Version Code [35-504019 / 69]
12									HUB, Rear Wheel
	68026067AA	1	3, 7	L	03, 05, 13, 15, 17				Interchangeable With [68026068AA] / With Special Version Code [35-504019 / 69]
	68026068AA	1	3, 7	L	03, 05, 13, 15, 17				Interchangeable With [68026067AA] / With Special Version Code [35-504019 / 69]
13	05134714AA	1	3, 7	L	03, 05, 13, 15, 17				STUD, Hub
14	05134715AA	12	3, 7	L	03, 05, 13, 15, 17				NUT, Hex Lock, With Special Version Code [35-504000 / 04]

SPRINTER (VB)

SERIES	LINE	BODY	ENGINE	TRANSMISSION
L = LOWLINE	3 = HD DODGE 2WD 6 = Lt. Duty DODGE 4WD 2 = Med. Duty DODGE 2WD 7 = Med. Duty DODGE 4WD	17 = VAN WHEEL BASE 7 55 = WAGON WHEEL BASE 5 15 = VAN WHEEL BASE 5 53 = 119 WB 13 = 119 WB 05 = CAB CHASSIS WHEEL BASE 5 03 = CAB CHASSIS WHEEL BASE 3	EG2 = 3.5L V6 Gas Engine EXM = 3.0L V6 Turbo Diesel Engine	DGZ = 5-Speed Auto W5A380 Transmission

Shafts,Rear,Axle,FWD/RWD/AWD
Figure 3-910

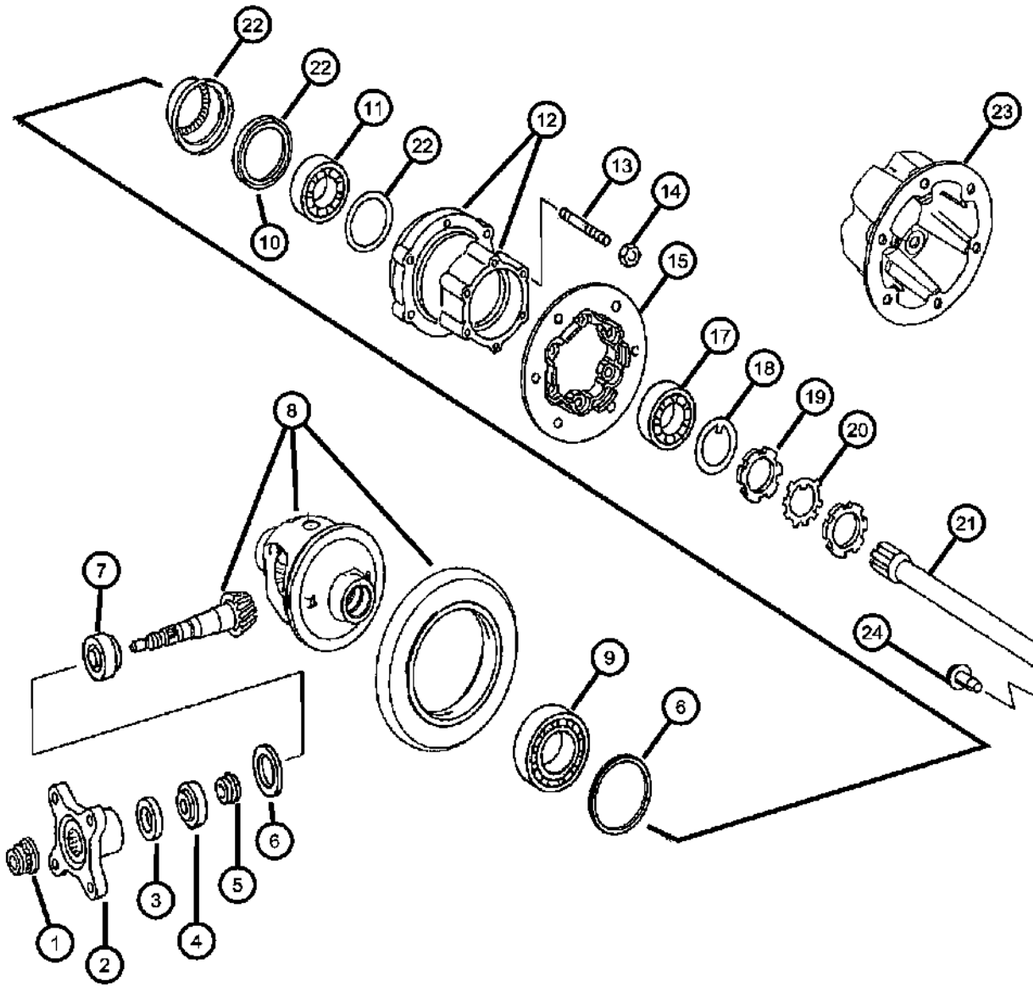

ITEM	PART NUMBER	QTY	LINE	SERIES	BODY	ENGINE	TRANS	TRIM	DESCRIPTION
15	68006710AA	2	3, 7	L	03, 05, 13, 15, 17				FLANGE, Axle Output, With Special Version Code [35-504306 / 09]
-16	04862627AA	6	3, 7	L					STUD, Wheel, Rear Axle Only. Do Not Use On Front Wheel Hubs.
17									BEARING, Tapered Roller
	68026069AA	1	3, 7	L	03, 05, 13, 15, 17				Interchangeable With [68026070AA] / With Special Version Code [35-504019 / 69], Outer
	68026070AA	1	3, 7	L	03, 05, 13, 15, 17				Interchangeable With [68026069AA] / With Special Version Code [35-504019 / 69], Outer
18	68025302AA	2	3, 7	L	03, 05, 13, 15, 17				PLATE, PLATE-LOCK, With Special Version Code [35-504000 / 04]
19	68025301AA	4	3, 7	L	03, 05, 13, 15, 17				NUT, Axle Hub, With Special Version Code [35-504000 / 04]
20	68025297AA	2	3, 7	L	03, 05, 13, 15, 17				WASHER, Axle Hub, With Special Version Code [35-504000 / 04]
21									SHAFT, Axle
	68026047AA	1	3, 7	L	03, 05, 13, 15, 17				With Special Version Code [35-504008 / 90], Left
	68026052AA	1	3, 7	L	03, 05, 13, 15, 17				With Special Version Code [35-504008 / 90], Right
22	04862662AA	2	3, 7	L	03, 05, 13, 15, 17				TONE RING, Sensor, This Includes [Tone Ring, Shaft Seal & Washer] These Parts Must Be Replaced As A Set.
23	68006710AA	2	3, 7	L	03, 05, 13, 15, 17				FLANGE, Axle Output
24	68026054AA	6	3, 7	L	03, 05, 13, 15, 17				BOLT, Hub

SPRINTER (VB)

SERIES	LINE	BODY	ENGINE	TRANSMISSION
L = LOWLINE	3 = HD DODGE 2WD 6 = Lt. Duty DODGE 4WD 2 = Med. Duty DODGE 2WD 7 = Med. Duty DODGE 4WD	17 = VAN WHEEL BASE 7 55 = WAGON WHEEL BASE 5 15 = VAN WHEEL BASE 5 53 = 119 WB 13 = 119 WB 05 = CAB CHASSIS WHEEL BASE 5 03 = CAB CHASSIS WHEEL BASE 3	EG2 = 3.5L V6 Gas Engine EXM = 3.0L V6 Turbo Diesel Engine	DGZ = 5-Speed Auto W5A380 Transmission

Group - 5
Brakes

005-100 Front Brakes	**005-200** Rear Brakes	**005-300** Power Brake Booster	**005-400** Brake Master Cylinder
005-500 Hydraulic Control Unit, Brake Tubes and Hoses	**005-600** Brake Pedals	**005-700** Parking Brake Lever, Cables, and Rear Disc Park Brake Assembly	

Group - 5 Brakes

Illustration Title — Group-Fig. No.

Front Brakes
Brakes,Front,FWD/RWD/AWD ..... Fig. 5 - 105
Brakes,Front,FWD/RWD/AWD ..... Fig. 5 - 106

Rear Brakes
Brakes, Rear, Disc,FWD/RWD/AWD ..... Fig. 5 - 205
Brakes, Rear, Disc,FWD/RWD/AWD ..... Fig. 5 - 206

Power Brake Booster
Booster,Vacuum Power Brake,FWD/RWD/AWD ..... Fig. 5 - 305
Pump,Vacuum ..... Fig. 5 - 320

Brake Master Cylinder
Master Cylinder,FWD/RWD/AWD ..... Fig. 5 - 405

Hydraulic Control Unit, Brake Tubes and Hoses
HCU and Tubes,Front,LHD ..... Fig. 5 - 505
Brake Tubes,Front ..... Fig. 5 - 515
Brake Tubes,Front ..... Fig. 5 - 516
Brake Tubes,Front ..... Fig. 5 - 517
Brake Tubes,Rear ..... Fig. 5 - 520
Brake Tubes,Rear ..... Fig. 5 - 521
Brake Tubes,Rear ..... Fig. 5 - 522

Brake Pedals
Pedal,Brake,Auto Trans ..... Fig. 5 - 605

Parking Brake Lever, Cables, and Rear Disc Park Brake Assembly
Park Brake Lever and Cables,Front,FWD/RWD/AWD ..... Fig. 5 - 705
Park Brake Assemby,Rear Disc,FWD/RWD/AWD ..... Fig. 5 - 725
Park Brake Assemby,Rear Disc,FWD/RWD/AWD ..... Fig. 5 - 726

Brakes,Front,FWD/RWD/AWD
Figure 5-105

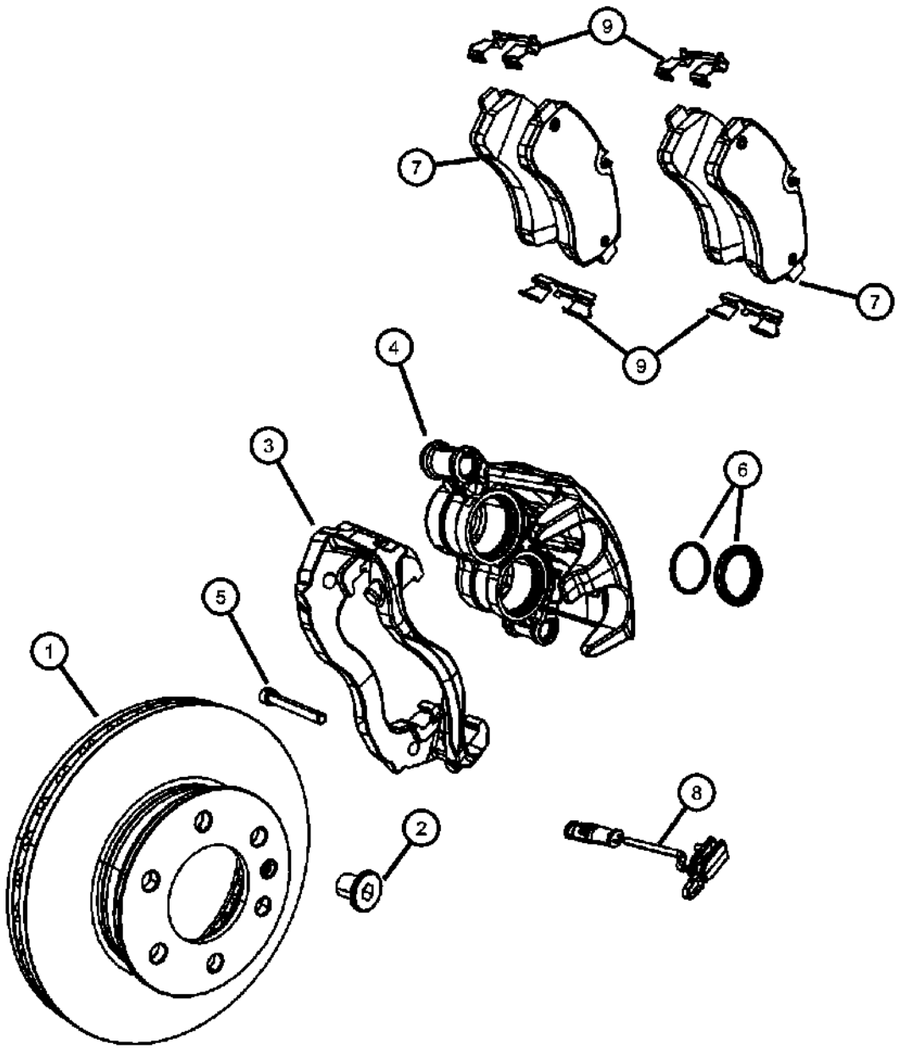

ITEM	PART NUMBER	QTY	LINE	SERIES	BODY	ENGINE	TRANS	TRIM	DESCRIPTION

NOTE:Seal Kit Does Not Include Caliper Pistons. Caliper Pistons Only Serviced With Caliper.
Sales Codes:
[DGZ]=5 Speed Automatic Transmission [W5A380]/ Mercedes Benz
[EXM]=3.0L V-6 Turbo Diesel Engine
[EG2]=3.5L V-6 Gas Engine

1	68006716AA	1	2, 3, 6, 7		13, 15, 17, 53, 55				ROTOR, Brake, Front Brake Disc
2	05140611AA	1	2, 3, 6, 7		13, 15, 17, 53, 55				SCREW, Set
3	68006724AA	2	2, 6						ADAPTER, Disc Brake Caliper
4									CALIPER, Disc Brake
	68006723AA	1	2, 6						Left
	68006735AA	1	2, 6						Right
5	05140611AA	1	2, 3, 6, 7		13, 15, 17, 53, 55				SCREW, Set
6	68006731AA	2	2, 6						SEAL, Caliper Piston, Caliper Piston Seal Kit
7	68006732AB	1	2, 6						PAD, Disc Brake
8	68006717AA	2	2, 6		13, 15, 17, 53, 55				SENSOR, Brake wear
9	68032643AA	2	2, 3, 6, 7						CLIP, Brake Anti-Rattle

SPRINTER (VB)

SERIES	LINE	BODY	ENGINE	TRANSMISSION
L = LOWLINE	3 = HD DODGE 2WD 6 = Lt. Duty DODGE 4WD 2 = Med. Duty DODGE 2WD 7 = Med. Duty DODGE 4WD	17 = VAN WHEEL BASE 7 55 = WAGON WHEEL BASE 5 15 = VAN WHEEL BASE 5 53 = 119 WB 13 = 119 WB 05 = CAB CHASSIS WHEEL BASE 5 03 = CAB CHASSIS WHEEL BASE 3	EG2 = 3.5L V6 Gas Engine EXM = 3.0L V6 Turbo Diesel Engine	DGZ = 5-Speed Auto W5A380 Transmission

Brakes,Front,FWD/RWD/AWD
Figure 5-106

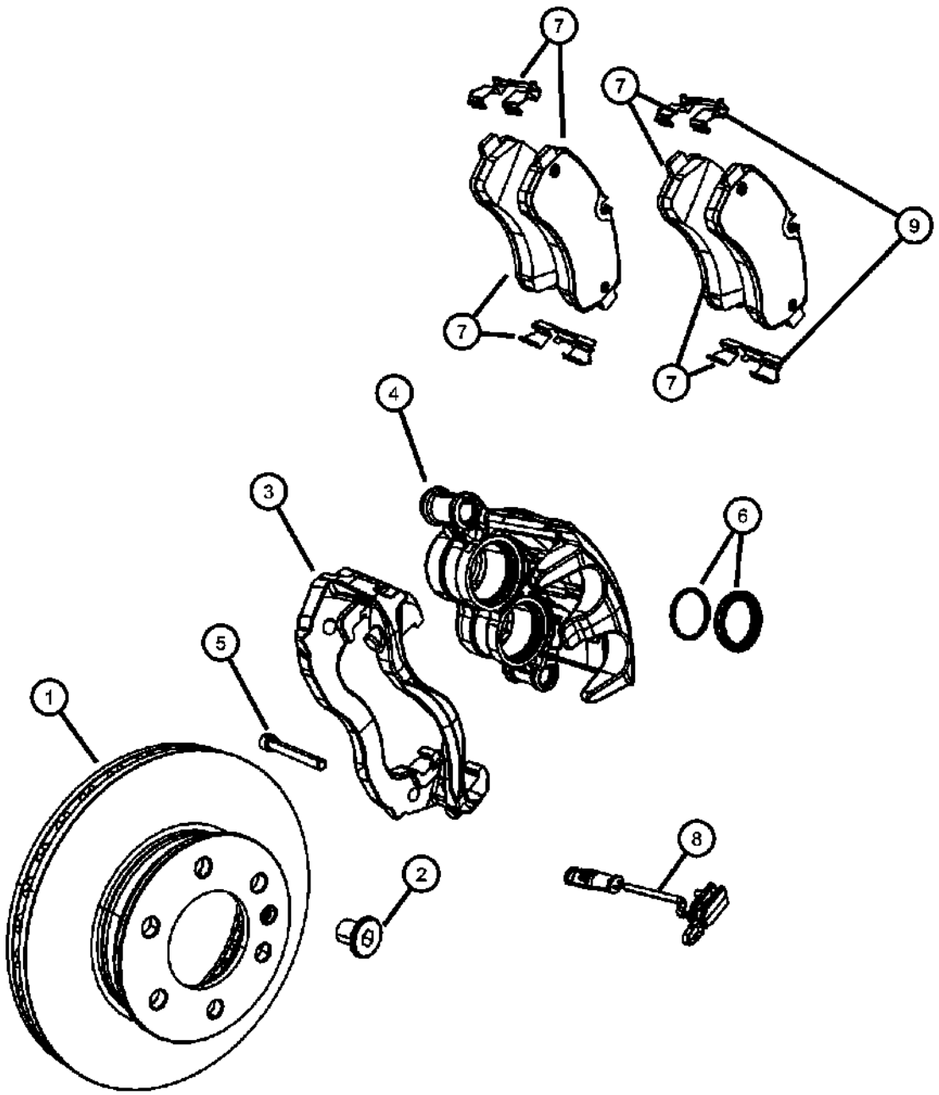

ITEM	PART NUMBER	QTY	LINE	SERIES	BODY	ENGINE	TRANS	TRIM	DESCRIPTION

NOTE:Seal Kit Does Not Include Caliper Pistons. Caliper Pistons Only Serviced With Caliper.
Sales Codes:
[DGZ]=5 Speed Automatic Transmission [W5A380]/ Mercedes Benz
[EXM]=3.0L V-6 Turbo Diesel Engine
[EG2]=3.5L V-6 Gas Engine

1	68006716AA	1	3, 7		03, 05	ROTOR, BrakeFront Brake Disc
2	05140611AA	2	3, 7		03, 05	SCREW, Set, Brake Disc To Wheel Hub [M8x12MM]
3	68006726AA	2	3, 7			ADAPTER, Disc Brake Caliper
4						CALIPER, Disc Brake
	68006736AA	1	3, 7			Right
	68006725AA	1	3, 7			Left
5	05140611AA	1	3, 7		03, 05	SCREW, Set
6	68006733AA	2	3, 7			SEAL, Caliper Piston, Caliper Piston Seal Kit
7	68006734AA	1	3, 7			BRAKE PAD
8	68006717AA	4	3, 7		03, 05, 13, 15, 17	SENSOR, Brake wear
9	68032643AA	2	2, 3, 6, 7			CLIP, Brake Anti-Rattle

SPRINTER (VB)

SERIES	LINE	BODY	ENGINE	TRANSMISSION
L = LOWLINE	3 = HD DODGE 2WD 6 = Lt. Duty DODGE 4WD 2 = Med. Duty DODGE 2WD 7 = Med. Duty DODGE 4WD	17 = VAN WHEEL BASE 7 55 = WAGON WHEEL BASE 5 15 = VAN WHEEL BASE 5 53 = 119 WB 13 = 119 WB 05 = CAB CHASSIS WHEEL BASE 5 03 = CAB CHASSIS WHEEL BASE 3	EG2 = 3.5L V6 Gas Engine EXM = 3.0L V6 Turbo Diesel Engine	DGZ = 5-Speed Auto W5A380 Transmission

Brakes, Rear, Disc,FWD/RWD/AWD
Figure 5-205

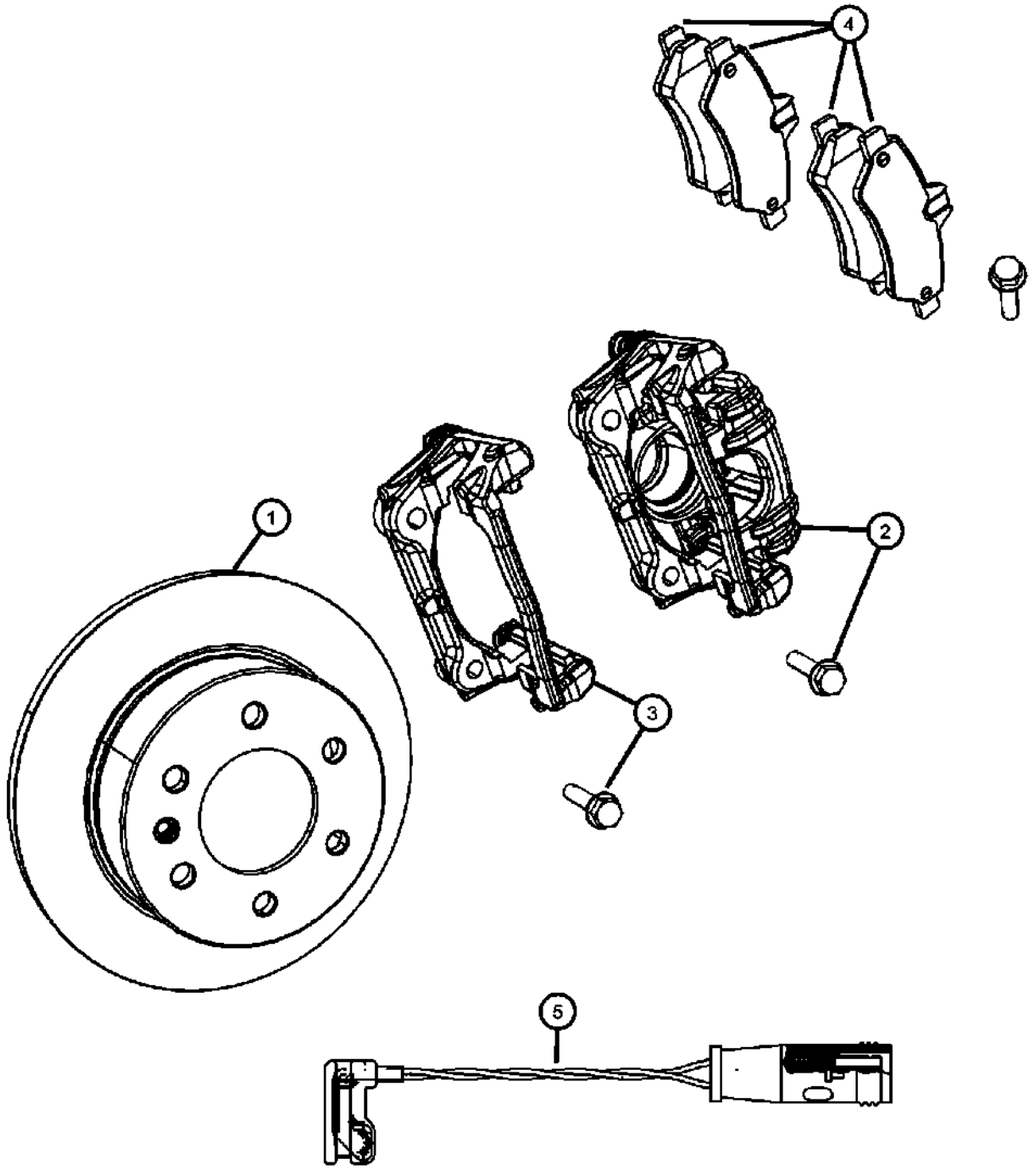

ITEM	PART NUMBER	QTY	LINE	SERIES	BODY	ENGINE	TRANS	TRIM	DESCRIPTION
NOTE:Seal Kit Or Rear Caliper Piston Kit Not Serviced. If Needed, Brake Caliper Must Be Replaced. Sales Codes:									
1	68013764AA	2	2, 6		13, 15, 17, 53, 55				ROTOR, Brake, With Special Version Code [42 504025 / 20]
2									CALIPER, Disc Brake
	68019136AA	1	2, 6		13, 15, 17, 53, 55				[Bosch] Special Version Code [42 504025 / 20] / Does Not Include Brake Caliper Adapter, Left
	68019137AA	1	2, 6		13, 15, 17, 53, 55				[Bosch] Special Version Code [42 504025 / 20] / Does Not Include Brake Caliper Adapter, Right
3									ADAPTER, Disc Brake Caliper
	68019138AA	1	2, 6		13, 15, 17, 53, 55				[Bosch] Special Version Code [42 504025 / 20], Left
	68019139AA	1	2, 6		13, 15, 17, 53, 55				[Bosch] Special Version Code [42 504025 / 20], Right
4	04862602AA	1	2, 6		13, 15, 17, 53, 55				PAD KIT, Disc Brake, [Galfer] Brand / With Special Version Code [42 504025 / 20]
5	68013762AA	4	2, 6		13, 15, 17, 53, 55				SENSOR, Brake wear, [2500] Series Only

SPRINTER (VB)

SERIES	LINE	BODY	ENGINE	TRANSMISSION
L = LOWLINE	3 = HD DODGE 2WD 6 = Lt. Duty DODGE 4WD 2 = Med. Duty DODGE 2WD 7 = Med. Duty DODGE 4WD	17 = VAN WHEEL BASE 7 55 = WAGON WHEEL BASE 5 15 = VAN WHEEL BASE 5 53 = 119 WB 13 = 119 WB 05 = CAB CHASSIS WHEEL BASE 5 03 = CAB CHASSIS WHEEL BASE 3	EG2 = 3.5L V6 Gas Engine EXM = 3.0L V6 Turbo Diesel Engine	DGZ = 5-Speed Auto W5A380 Transmission

Brakes, Rear, Disc,FWD/RWD/AWD
Figure 5-206

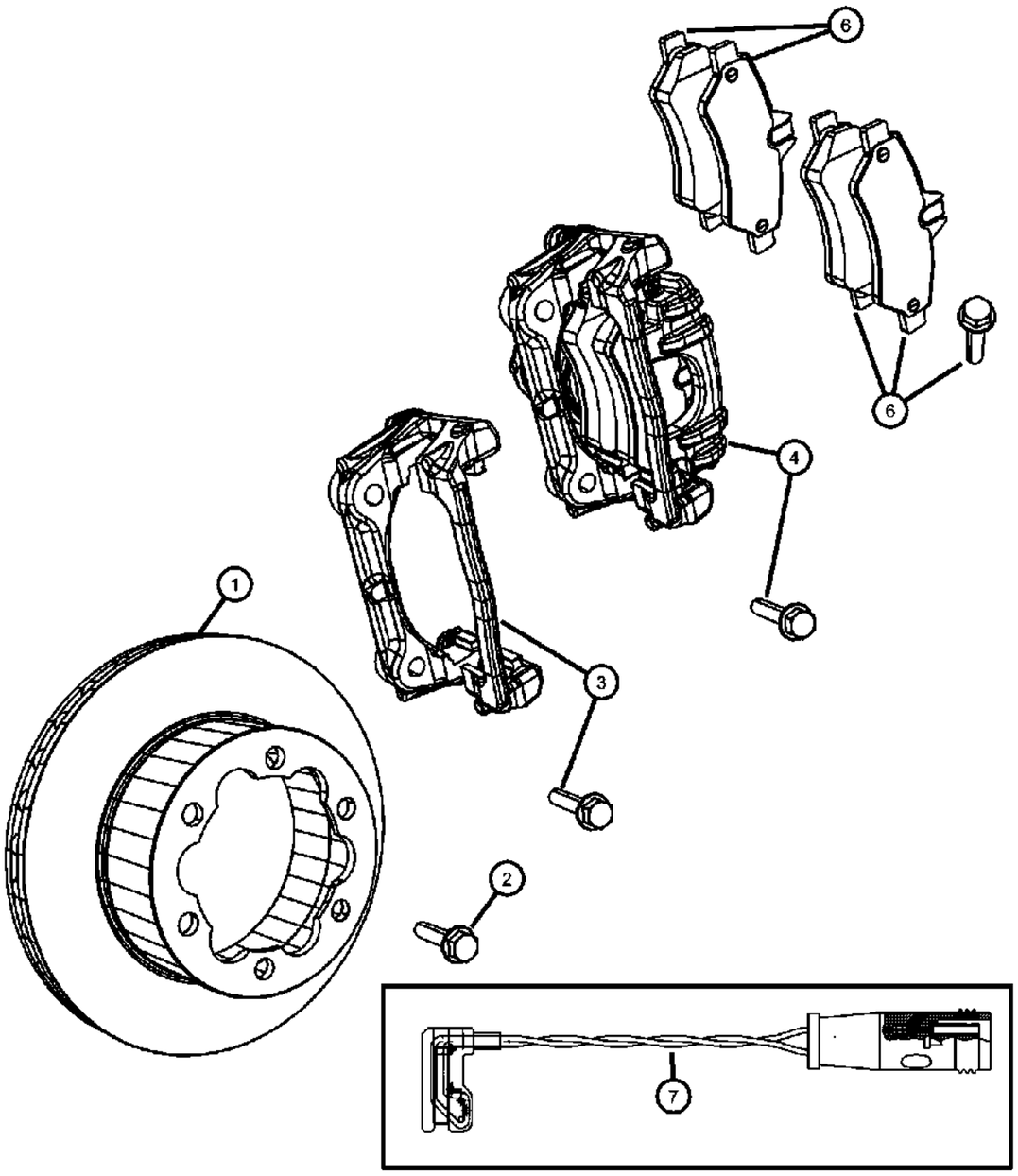

ITEM	PART NUMBER	QTY	LINE	SERIES	BODY	ENGINE	TRANS	TRIM	DESCRIPTION
NOTE:Seal Kit Or Rear Caliper Piston Kit Not Serviced. If Needed, Brake Caliper Must Be Replaced.									
Sales Codes:									
1	68013765AA	2	3, 7		03, 05, 13, 15, 17				ROTOR, Brake, Rear Wheel Hub Special Version Code [35 504019 / 69] / Caliper Special Version
2	06104258AA	6	3, 7		03, 05, 13, 15, 17				BOLT, Hex Flange Head, M14x1.50x45.00, Brake Rotor To Hub / Special Version Code [35 504019 / 69]
3									BOLT, Brake Mounting
	68026166AA	1	3, 7		03, 05, 13, 15, 17				Brake Anchor & Bolt / With Special Version Code [42 504025 / 37], Left
	68026167AA	1	3, 7		03, 05, 13, 15, 17				Brake Anchor & Bolt / With Special Version Code [42 504025 / 53], Right
4	68025560AA	1	3, 7		03, 05, 13, 15, 17				CALIPER, Disc Brake, Left, [Bosch] Without Brake Anchor & Brake Pads / Includes Mounting Bolt / With Special Version Code [35 504025 / 37]
-5	68025561AA	1	3, 7		03, 05, 13, 15, 17				CALIPER, Disc Brake, Right, [Bosch] Without Brake Anchor & Brake Pads / Includes Mounting Bolt / With Special Version Code [35 504025 / 53]
6	04862603AA	1	3, 7		03, 05, 13, 15, 17				PAD KIT, Disc Brake, [Federal Mogul Brand] With Special Version Code [42 504025 / 37 / 53]
7	68006717AA	4	3, 7		03, 05, 13, 15, 17				SENSOR, Brake wear, [3500] Series Only / Sensor For Front & Rear Brakes

SPRINTER (VB)

SERIES	LINE	BODY	ENGINE	TRANSMISSION
L = LOWLINE	3 = HD DODGE 2WD 6 = Lt. Duty DODGE 4WD 2 = Med. Duty DODGE 2WD 7 = Med. Duty DODGE 4WD	17 = VAN WHEEL BASE 7 55 = WAGON WHEEL BASE 5 15 = VAN WHEEL BASE 5 53 = 119 WB 13 = 119 WB 05 = CAB CHASSIS WHEEL BASE 5 03 = CAB CHASSIS WHEEL BASE 3	EG2 = 3.5L V6 Gas Engine EXM = 3.0L V6 Turbo Diesel Engine	DGZ = 5-Speed Auto W5A380 Transmission

Booster,Vacuum Power Brake,FWD/RWD/AWD
Figure 5-305

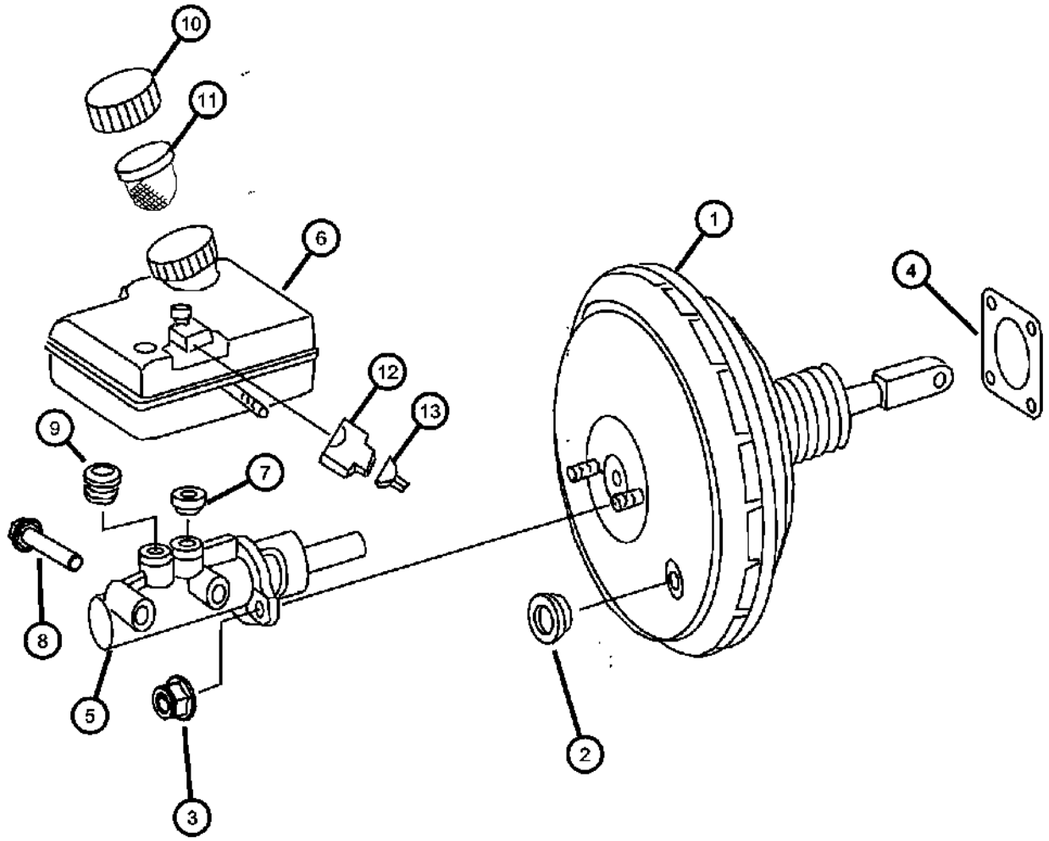

ITEM	PART NUMBER	QTY	LINE	SERIES	BODY	ENGINE	TRANS	TRIM	DESCRIPTION
1	68013551AA	1	2, 3, 6, 7						BOOSTER, Power Brake
2	05133696AA	1	2, 3, 6, 7						GASKET, Vacuum Line To Brake Booster
3	05126237AA	3	2, 3, 6, 7		03, 05, 13, 15, 17				NUT, Hex
4	05119386AA	1	2, 3, 6, 7						GASKET, Booster To Dash
5	68005054AA	1	2, 3, 6, 7						MASTER CYLINDER, Brake
6									RESERVOIR, Brake Master Cylinder
	68005056AA	1	3, 7						
	68005057AA	1	2, 6						
7	68005058AA	1	2, 3, 6, 7						SEAL, Brake Cylinder To Reservoir
8	68005059AA	1	2, 3, 6, 7						SCREW
9	68005060AA	1	2, 3, 6, 7						SEAL, Brake Cylinder To Reservoir
10	68013552AA	1	2, 3, 6, 7						CAP, Master Cylinder Reservoir
11	05098371AB	1	2, 3, 6, 7						FILTER, Brake Master Cylinder
12	05120277AA	1	2, 3, 6, 7						CONNECTOR, Wiring Repair, 2 Pin Connector [S11]
13	05103874AA	1	2, 3, 6, 7						TERMINAL, [0.75MM] [S11] Contact
-14	05120860AA	1	2, 3, 6, 7						GASKET, Connector Gasket [1.6 / 1.9MM] [S11] Contact

SPRINTER (VB)

SERIES	LINE	BODY	ENGINE	TRANSMISSION
L = LOWLINE	3 = HD DODGE 2WD 6 = Lt. Duty DODGE 4WD 2 = Med. Duty DODGE 2WD 7 = Med. Duty DODGE 4WD	17 = VAN WHEEL BASE 7 55 = WAGON WHEEL BASE 5 15 = VAN WHEEL BASE 5 53 = 119 WB 13 = 119 WB 05 = CAB CHASSIS WHEEL BASE 5 03 = CAB CHASSIS WHEEL BASE 3	EG2 = 3.5L V6 Gas Engine EXM = 3.0L V6 Turbo Diesel Engine	DGZ = 5-Speed Auto W5A380 Transmission

Pump,Vacuum
Figure 5-320

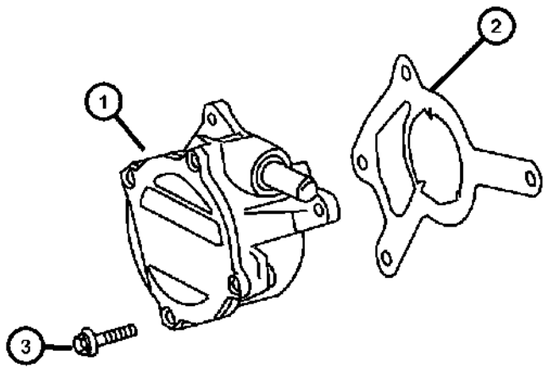

ITEM	PART NUMBER	QTY	LINE	SERIES	BODY	ENGINE	TRANS	TRIM	DESCRIPTION
1	05175907AA	1	2, 3, 6, 7						PUMP, Vacuum
2	05175755AA	1	2, 3, 6, 7						GASKET, Vacuum Pump, Mounting
3	06104006AA	4	2, 3, 6, 7						BOLT, Torx Socket Head, M6X1.00X20.00

SPRINTER (VB)

SERIES	LINE	BODY	ENGINE	TRANSMISSION
L = LOWLINE	3 = HD DODGE 2WD 6 = Lt. Duty DODGE 4WD 2 = Med. Duty DODGE 2WD 7 = Med. Duty DODGE 4WD	17 = VAN WHEEL BASE 7 55 = WAGON WHEEL BASE 5 15 = VAN WHEEL BASE 5 53 = 119 WB 13 = 119 WB 05 = CAB CHASSIS WHEEL BASE 5 03 = CAB CHASSIS WHEEL BASE 3	EG2 = 3.5L V6 Gas Engine EXM = 3.0L V6 Turbo Diesel Engine	DGZ = 5-Speed Auto W5A380 Transmission

Master Cylinder,FWD/RWD/AWD
Figure 5-405

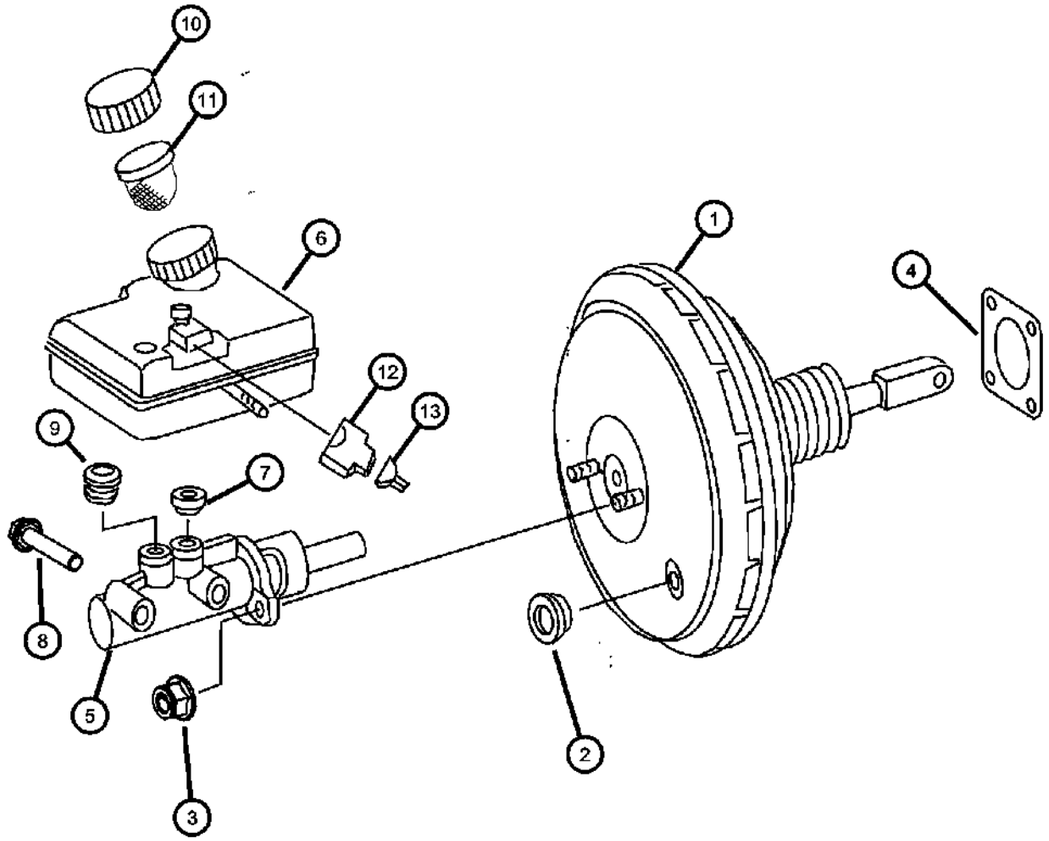

ITEM	PART NUMBER	QTY	LINE	SERIES	BODY	ENGINE	TRANS	TRIM	DESCRIPTION
1	68013551AA	1	2, 3, 6, 7						BOOSTER, Power Brake
2	05133696AA	1	2, 3, 6, 7						GASKET, Vacuum Line To Brake Booster
3	05126237AA	3	2, 3, 6, 7		03, 05, 13, 15, 17				NUT, Hex
4	05119386AA	1	2, 3, 6, 7						GASKET, Booster To Dash
5	68005054AA	1	2, 3, 6, 7						MASTER CYLINDER, Brake
6									RESERVOIR, Brake Master Cylinder
	68005057AA	1	2, 6						
	68005056AA	1	3, 7						
7	68005058AA	1	2, 3, 6, 7						SEAL, Brake Cylinder To Reservoir
8	68005059AA	1	2, 3, 6, 7						SCREW
9	68005060AA	1	2, 3, 6, 7						SEAL, Brake Cylinder To Reservoir
10	68013552AA	1	2, 3, 6, 7						CAP, Master Cylinder Reservoir
11	05098371AB	1	2, 3, 6, 7						FILTER, Brake Master Cylinder
12	05120277AA	1	2, 3, 6, 7						CONNECTOR, Wiring Repair, 2 Pin Connector [S11]
13	05103874AA	1	2, 3, 6, 7						TERMINAL, [0.75MM] [S11] Contact
-14	05120860AA	1	2, 3, 6, 7						GASKET, Connector Gasket [1.6 / 1.9MM] [S11] Contact

SPRINTER (VB)

SERIES	LINE	BODY	ENGINE	TRANSMISSION
L = LOWLINE	3 = HD DODGE 2WD 6 = Lt. Duty DODGE 4WD 2 = Med. Duty DODGE 2WD 7 = Med. Duty DODGE 4WD	17 = VAN WHEEL BASE 7 55 = WAGON WHEEL BASE 5 15 = VAN WHEEL BASE 5 53 = 119 WB 13 = 119 WB 05 = CAB CHASSIS WHEEL BASE 5 03 = CAB CHASSIS WHEEL BASE 3	EG2 = 3.5L V6 Gas Engine EXM = 3.0L V6 Turbo Diesel Engine	DGZ = 5-Speed Auto W5A380 Transmission

HCU and Tubes,Front,LHD
Figure 5-505

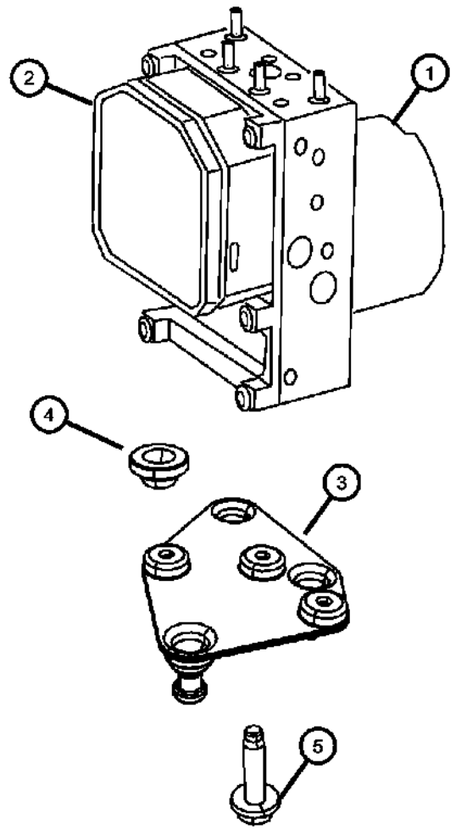

ITEM	PART NUMBER	QTY	LINE	SERIES	BODY	ENGINE	TRANS	TRIM	DESCRIPTION
NOTE:									
Sales Codes;									
[BNB]=Electronic Stability Program									
1									CONTROL UNIT, Anti-Lock Brake
	68026562AA	1	2, 6						With [BNB]
	68026567AA	1	3, 7						With [BNB]
2									MODULE, Electronic Stability
	68022025AA	1	3, 7		03, 05, 13, 15, 17				With [BNB]
	68028681AA	1	2, 6		13, 15, 17, 53, 55				With [BNB]
3	68013573AA	1	2, 3, 6, 7						BRACKET, Hydraulic Control Unit
4	05099283AA	2	2, 3, 6, 7						GROMMET
5	06104142AA	2	2, 3, 6, 7						SCREW, Pan Head, M6x1.00x16.00Mounting

SPRINTER (VB)

SERIES	LINE	BODY	ENGINE	TRANSMISSION
L = LOWLINE	3 = HD DODGE 2WD 6 = Lt. Duty DODGE 4WD 2 = Med. Duty DODGE 2WD 7 = Med. Duty DODGE 4WD	17 = VAN WHEEL BASE 7 55 = WAGON WHEEL BASE 5 15 = VAN WHEEL BASE 5 53 = 119 WB 13 = 119 WB 05 = CAB CHASSIS WHEEL BASE 5 03 = CAB CHASSIS WHEEL BASE 3	EG2 = 3.5L V6 Gas Engine EXM = 3.0L V6 Turbo Diesel Engine	DGZ = 5-Speed Auto W5A380 Transmission

Brake Tubes,Front
Figure 5-515

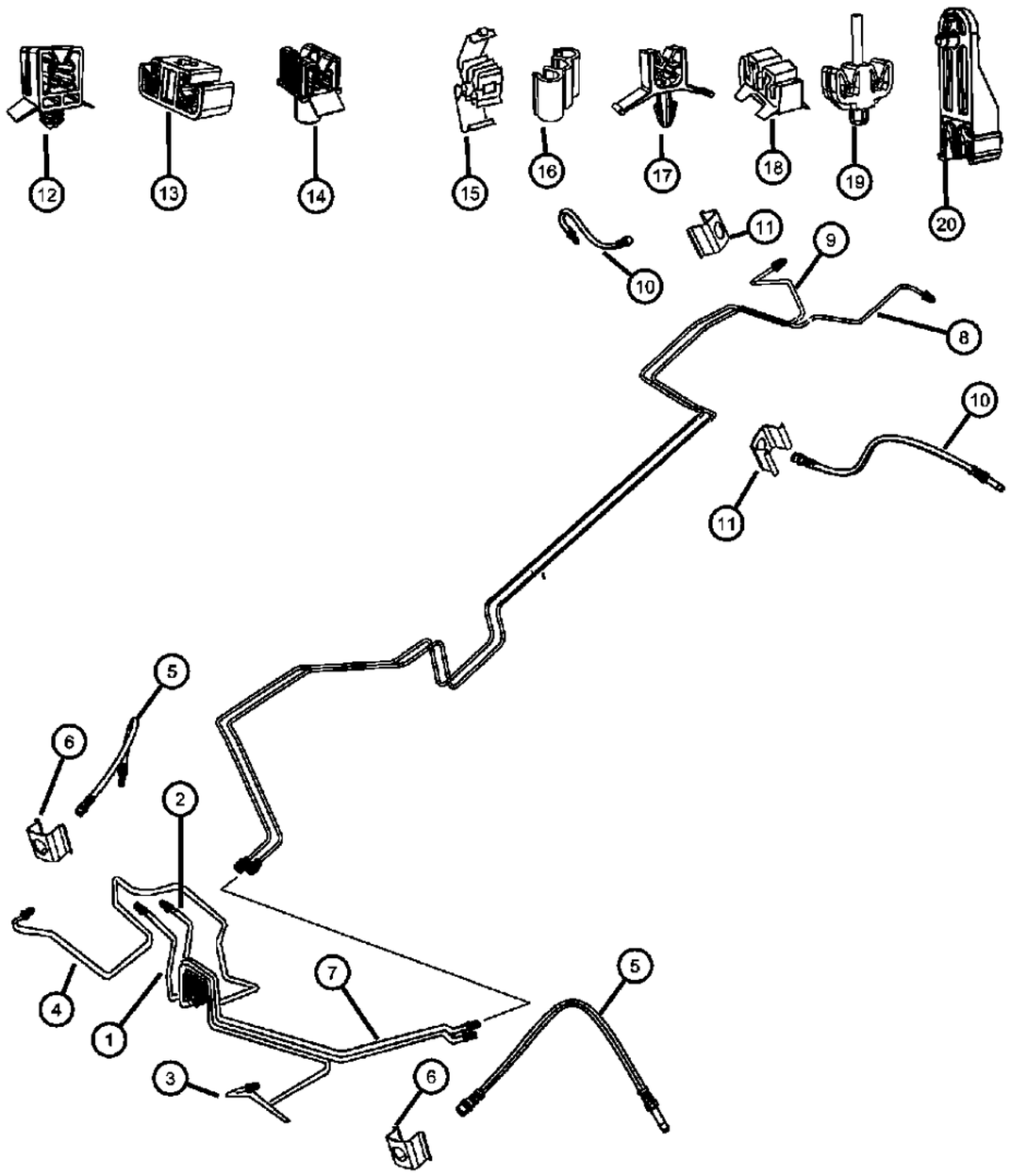

ITEM	PART NUMBER	QTY	LINE	SERIES	BODY	ENGINE	TRANS	TRIM	DESCRIPTION
NOTE:BRAKE LINES ARE TO BE ADAPTED OR MODIFIED TO FIT. BRAKE LINE FITTINGS NOT SERVICED, MUST ORDER BRAKE LINE.									
1	68013575AA	1	2, 3, 6, 7						TUBE, Brake, Master Cylinder To Hydraulic Unit Connection [HZ1] / See Note, Right
2	68013579AA	1	2, 3, 6, 7						TUBE, Brake, Master Cylinder To Hydraulic Unit Connection [HZ1] / See Note, Left
3	05133717AA	1	2, 3, 6, 7						TUBE, Brake, Hydraulic Unit To Hose Bracket [VL] [4.75x7x1590 MM] / See Note, Left
4	05136111AA	1	2, 3, 6, 7						TUBE, Brake, Hydraulic Assembly To Hose Bracket / [RF], Right
5	68013581AA	2	2, 3, 6, 7						HOSE, BrakeRight & Left
6	05098140AA	2	2, 3, 6, 7		13, 15, 17, 53, 55				CLIP, Spring, Brake Hose To Bracket, Right & Left
7	05133712AA	2	2, 3, 6, 7						TUBE, Brake, Hydraulic Unit To Separation Point / [HL] / [4.75x0.7x1395 MM] / See Note, Right & Left
8	68013599AA	1	2, 6		13, 53				TUBE, Brake, From Separation Point At Front To Left Rear Axle
9	68013594AA	1	2, 6		13, 53				TUBE, Brake, From Separation Point At Front To Right Rear Axle
10	68013582AA	2	2, 6		13, 15, 17, 53, 55				HOSE, Brake, Rear Axle Hose, Right & Left
11	05098140AA	2	2, 3, 6, 7		13, 15, 17, 53, 55				CLIP, Spring, Brake Hose To Bracket
12	68011037AA	1	2, 3, 6, 7		13, 15, 17, 53, 55				RETAINER, Brake Line Holder
13	68013615AA	1	2, 3, 6, 7						RETAINER, Brake Line Holder
14	68011033AA	1	2, 3, 6, 7						RETAINER, Brake Line Holder
15	68013611AA	1	2, 3, 6, 7						CLAMP, Brake, Brake Line
16	05119689AA	1	2, 3, 6, 7		13, 15, 17, 53, 55				CLIP, Brake Line
17	05119329AA	4	2, 3, 6, 7		13, 15, 17, 53, 55				CLIP, Brake Line
18	68013612AA	3	2, 3, 6, 7						RETAINER
19	68013613AA	3	2, 3, 6, 7						RETAINER
20	68013614AA	4	2, 3, 6, 7						BRACKET

SPRINTER (VB)

SERIES	LINE	BODY	ENGINE	TRANSMISSION
L = LOWLINE	3 = HD DODGE 2WD 6 = Lt. Duty DODGE 4WD 2 = Med. Duty DODGE 2WD 7 = Med. Duty DODGE 4WD	17 = VAN WHEEL BASE 7 55 = WAGON WHEEL BASE 5 15 = VAN WHEEL BASE 5 53 = 119 WB 13 = 119 WB 05 = CAB CHASSIS WHEEL BASE 5 03 = CAB CHASSIS WHEEL BASE 3	EG2 = 3.5L V6 Gas Engine EXM = 3.0L V6 Turbo Diesel Engine	DGZ = 5-Speed Auto W5A380 Transmission

Brake Tubes,Front
Figure 5-516

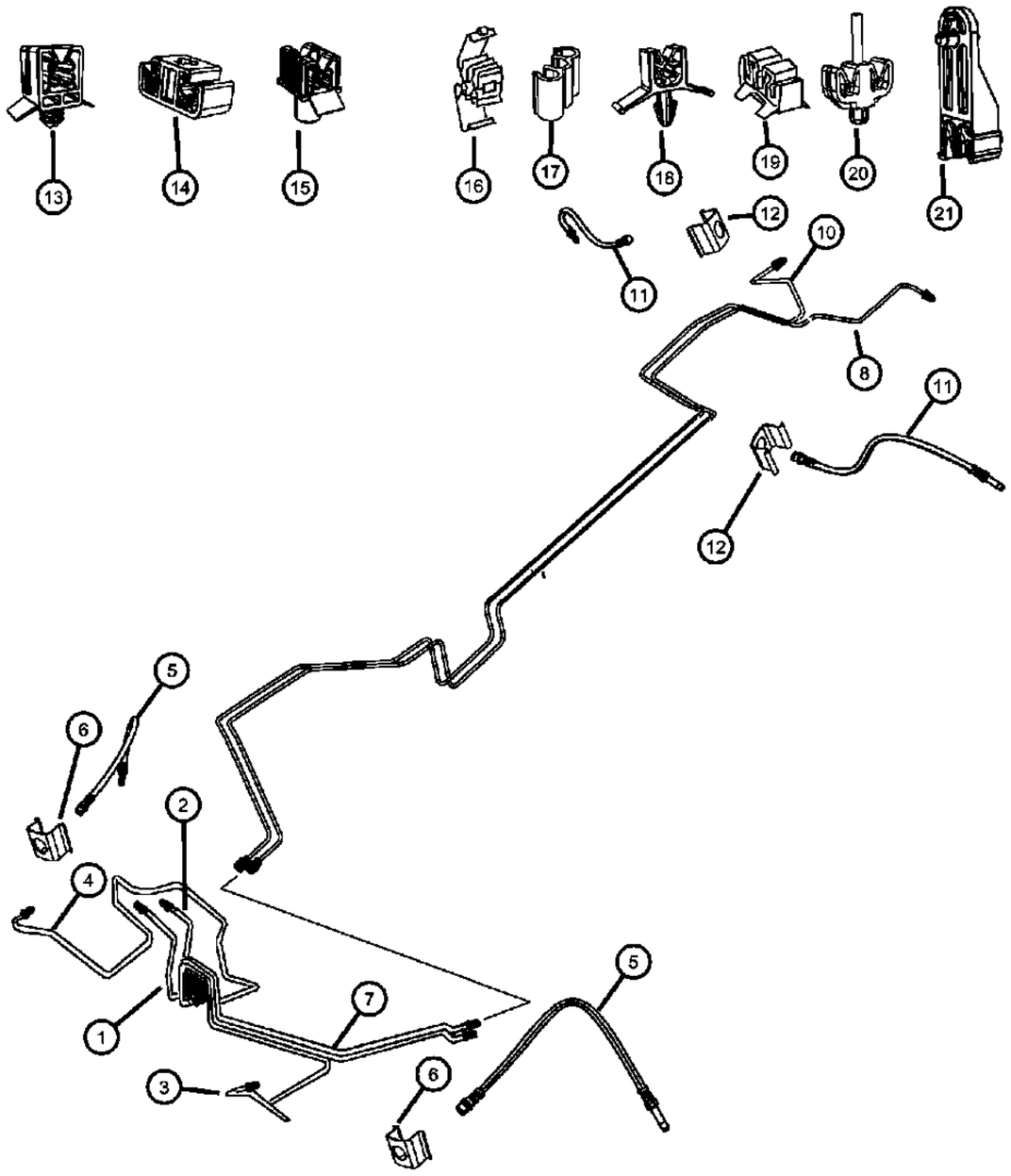

ITEM	PART NUMBER	QTY	LINE	SERIES	BODY	ENGINE	TRANS	TRIM	DESCRIPTION
NOTE:BRAKE LINES ARE TO BE ADAPTED OR MODIFIED TO FIT. BRAKE LINE FITTINGS NOT SERVICED, MUST ORDER BRAKE LINE.									
1	68013575AA	1	2, 3, 6, 7						TUBE, Brake, Master Cylinder To Hydraulic Unit Connection [HZ2] / See Note
2	68013579AA	1	2, 3, 6, 7						TUBE, Brake, Master Cylinder To Hydraulic Unit Connection [HZ1] / See Note
3	05133717AA	1	2, 3, 6, 7						TUBE, Brake, Hydraulic Unit [VL] To Hose Bracket [4.75x0.7x1590 MM] / See Note, Left
4	05136111AA	1	2, 3, 6, 7						TUBE, Brake, Hydraulic Assembly To Hose [RF] / See Note, Right
5	68013581AA	2	2, 3, 6, 7						HOSE, Brake, Brake Hose, Right & Left
6	05098140AA	2	2, 3, 6, 7		13, 15, 17, 53, 55				CLIP, Spring, Brake Hose To Bracket
7	05133712AA	1	2, 3, 6, 7		13, 15, 17, 53, 55				TUBE, Brake, [HL] Hydraulic Unit To Separation Point [4.75x0.7x1395 MM] / See Note, Right & Left, Front
8	04862640AA	1	3, 7		13, 53				TUBE, Brake
-9	05125769AA	1	3, 7						NUT, Brake Line End Nut
10	68013620AA	1	3, 7		15, 17, 55				TUBE, Brake, From Separation Point To Right Rear Axle / See Note, Right
11	68013583AA	2	3, 7						HOSE, BrakeRight & Left
12	05098140AA	2	2, 3, 6, 7		13, 15, 17, 53, 55				CLIP, Spring, Brake Hose To Bracket
13	68011037AA	1	2, 3, 6, 7		13, 15, 17, 53, 55				RETAINER, Brake Line Holder
14	68013615AA	1	2, 3, 6, 7						RETAINER, Brake Line Holder
15	68011033AA	1	2, 3, 6, 7						RETAINER, Brake Line Holder
16	68013611AA	1	2, 3, 6, 7						CLAMP, Brake
17	05119689AA	1	2, 3, 6, 7		13, 15, 17, 53, 55				CLIP, Brake Line, Brake Line Holder
18	05119329AA	4	2, 3, 6, 7		13, 15, 17, 53, 55				CLIP, Brake Line
19	68013612AA	3	2, 3, 6, 7						RETAINER
20	68013613AA	3	2, 3, 6, 7						RETAINER
21	68013614AA	4	2, 3, 6, 7						BRACKET

SPRINTER (VB)

SERIES	LINE	BODY	ENGINE	TRANSMISSION
L = LOWLINE	3 = HD DODGE 2WD 6 = Lt. Duty DODGE 4WD 2 = Med. Duty DODGE 2WD 7 = Med. Duty DODGE 4WD	17 = VAN WHEEL BASE 7 55 = WAGON WHEEL BASE 5 15 = VAN WHEEL BASE 5 53 = 119 WB 13 = 119 WB 05 = CAB CHASSIS WHEEL BASE 5 03 = CAB CHASSIS WHEEL BASE 3	EG2 = 3.5L V6 Gas Engine EXM = 3.0L V6 Turbo Diesel Engine	DGZ = 5-Speed Auto W5A380 Transmission

Brake Tubes,Front
Figure 5-517

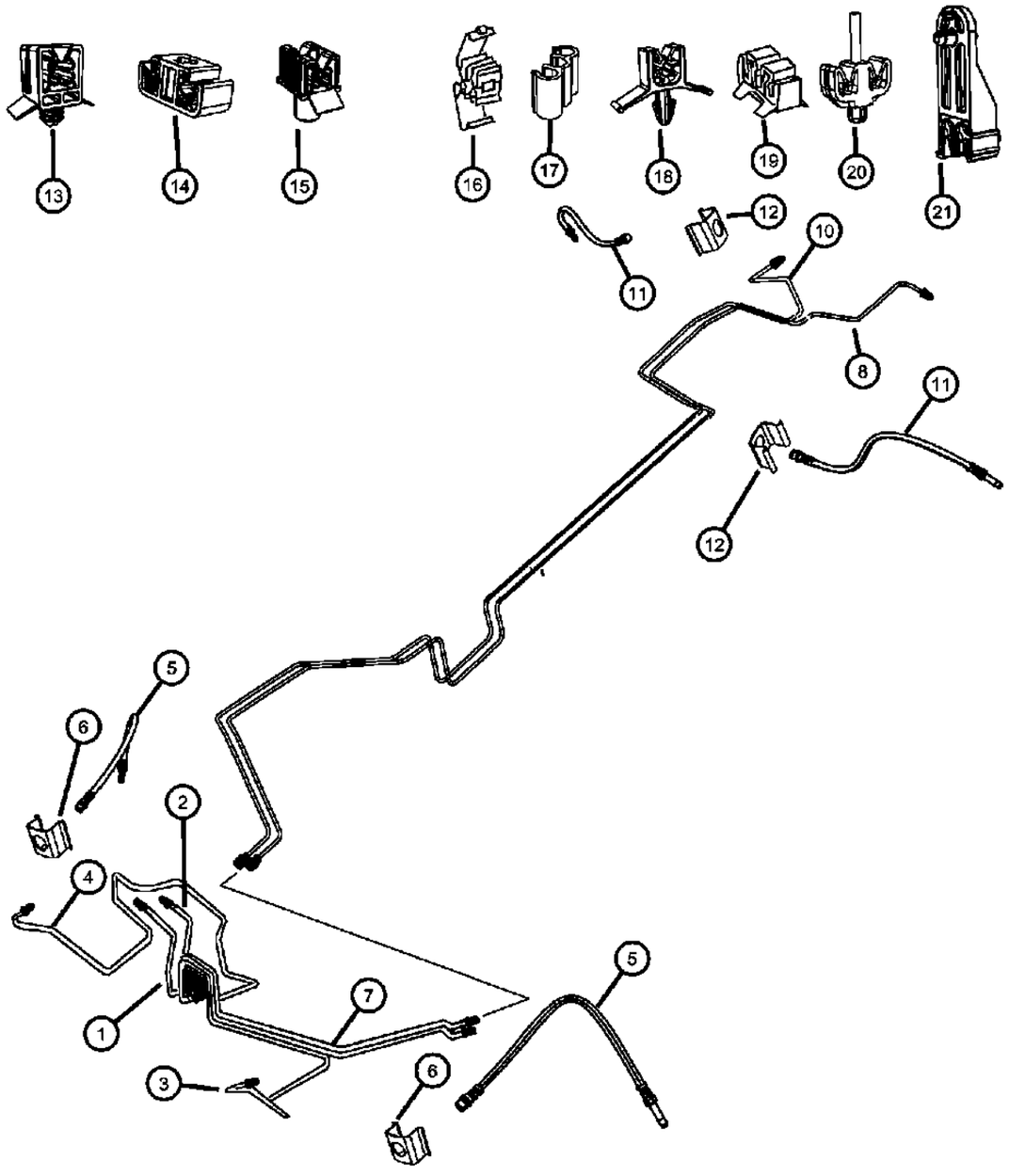

ITEM	PART NUMBER	QTY	LINE	SERIES	BODY	ENGINE	TRANS	TRIM	DESCRIPTION
NOTE:BRAKE LINES ARE TO BE ADAPTED OR MODIFIED TO FIT. BRAKE LINE FITTINGS NOT SERVICED, MUST ORDER BRAKE LINE.									
1	68013575AA	1	2, 3, 6, 7						TUBE, Brake, Master Cylinder To Hydraulic Unit Connection [HZ2] / See Note
2	68013579AA	1	2, 3, 6, 7						TUBE, Brake, Master Cylinder To Hydraulic Unit Connection [HZ1] / See Note
3	05133717AA	1	3, 7		03, 05				TUBE, Brake, Hydraulic Unit [VL] To Hose Bracket [4.75x0.7x1590 MM] / See Note, Left
4	05136111AA	1	3, 7		03, 05				TUBE, Brake, Hydraulic Assembly To Hose [RF] / See Note, Right
5	68013581AA	2	2, 3, 6, 7						HOSE, Brake, Brake Hose, Right & Left
6	05098140AA	2	3, 7		03, 05				CLIP, Spring, Brake Hose To Bracket
7	05133712AA	2	2, 3, 6, 7						TUBE, Brake, [HL] Hydraulic Unit To Separation Point [4.75x0.7x1395 MM] / See Note, Right & Left, Front
8									TUBE, Brake
	68013607AA	1	3, 7		03				Separation Point To Left Rear Axle, Left
	68013608AA	1	3, 7		05				Separation Point To Left Rear Axle, Left
-9	05125769AA	1	3, 7						NUT, Brake Line End Nut
10									TUBE, Brake
	05133729AA	1	3, 7		03				Separation Point To Rear Axle, Right
	05133731AA	1	3, 7		05				Separation Point To Rear Axle, Right
11	68013583AA	2	3, 7						HOSE, BrakeRight & Left
12	68011037AA	1	3, 7		03, 05				RETAINER, Brake Line Holder
13	68013615AA	1	2, 3, 6, 7						RETAINER, Brake Line Holder
14	68013615AA	1	2, 3, 6, 7						RETAINER, Brake Line Holder
15	68011033AA	1	2, 3, 6, 7						RETAINER, Brake Line Holder
16	68013611AA	1	3, 7		03, 05				CLAMP, Brake
17	05119329AA	4	3, 7		03, 05				CLIP, Brake Line, Brake Line Holder
18	68013612AA	3	2, 3, 6, 7						RETAINER, Brake Line Holder
19	68013612AA	3	2, 3, 6, 7						RETAINER

SPRINTER (VB)

SERIES	LINE	BODY	ENGINE	TRANSMISSION
L = LOWLINE	3 = HD DODGE 2WD 6 = Lt. Duty DODGE 4WD 2 = Med. Duty DODGE 2WD 7 = Med. Duty DODGE 4WD	17 = VAN WHEEL BASE 7 55 = WAGON WHEEL BASE 5 15 = VAN WHEEL BASE 5 53 = 119 WB 13 = 119 WB 05 = CAB CHASSIS WHEEL BASE 5 03 = CAB CHASSIS WHEEL BASE 3	EG2 = 3.5L V6 Gas Engine EXM = 3.0L V6 Turbo Diesel Engine	DGZ = 5-Speed Auto W5A380 Transmission

Brake Tubes,Front
Figure 5-517

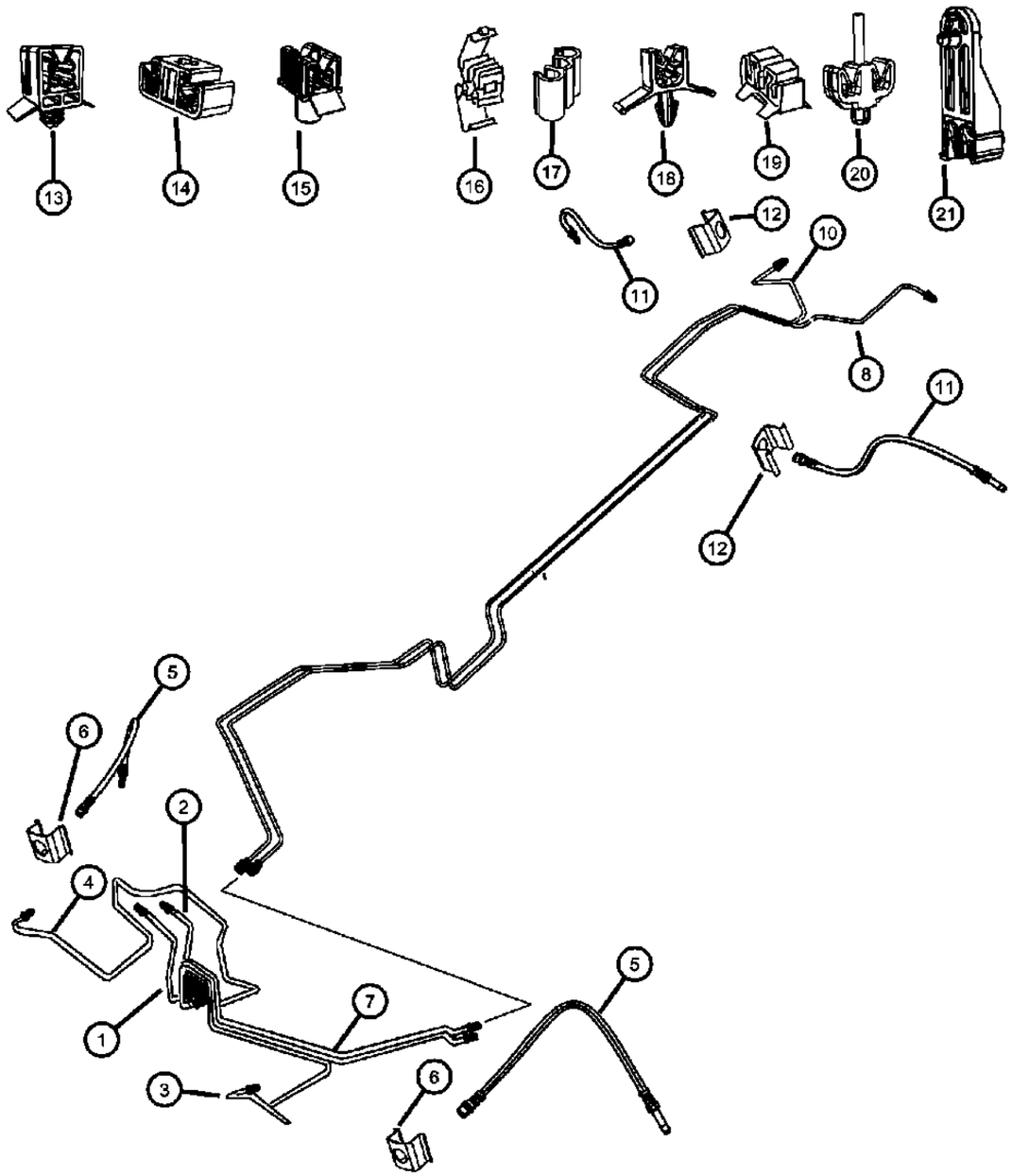

ITEM	PART NUMBER	QTY	LINE	SERIES	BODY	ENGINE	TRANS	TRIM	DESCRIPTION
20	68013613AA	3	2, 3, 6, 7						RETAINER
21	68008614AA	2	2, 3, 6, 7						BRACKET

SPRINTER (VB)

SERIES	LINE	BODY	ENGINE	TRANSMISSION
L = LOWLINE	3 = HD DODGE 2WD 6 = Lt. Duty DODGE 4WD 2 = Med. Duty DODGE 2WD 7 = Med. Duty DODGE 4WD	17 = VAN WHEEL BASE 7 55 = WAGON WHEEL BASE 5 15 = VAN WHEEL BASE 5 53 = 119 WB 13 = 119 WB 05 = CAB CHASSIS WHEEL BASE 5 03 = CAB CHASSIS WHEEL BASE 3	EG2 = 3.5L V6 Gas Engine EXM = 3.0L V6 Turbo Diesel Engine	DGZ = 5-Speed Auto W5A380 Transmission

Brake Tubes,Rear
Figure 5-520

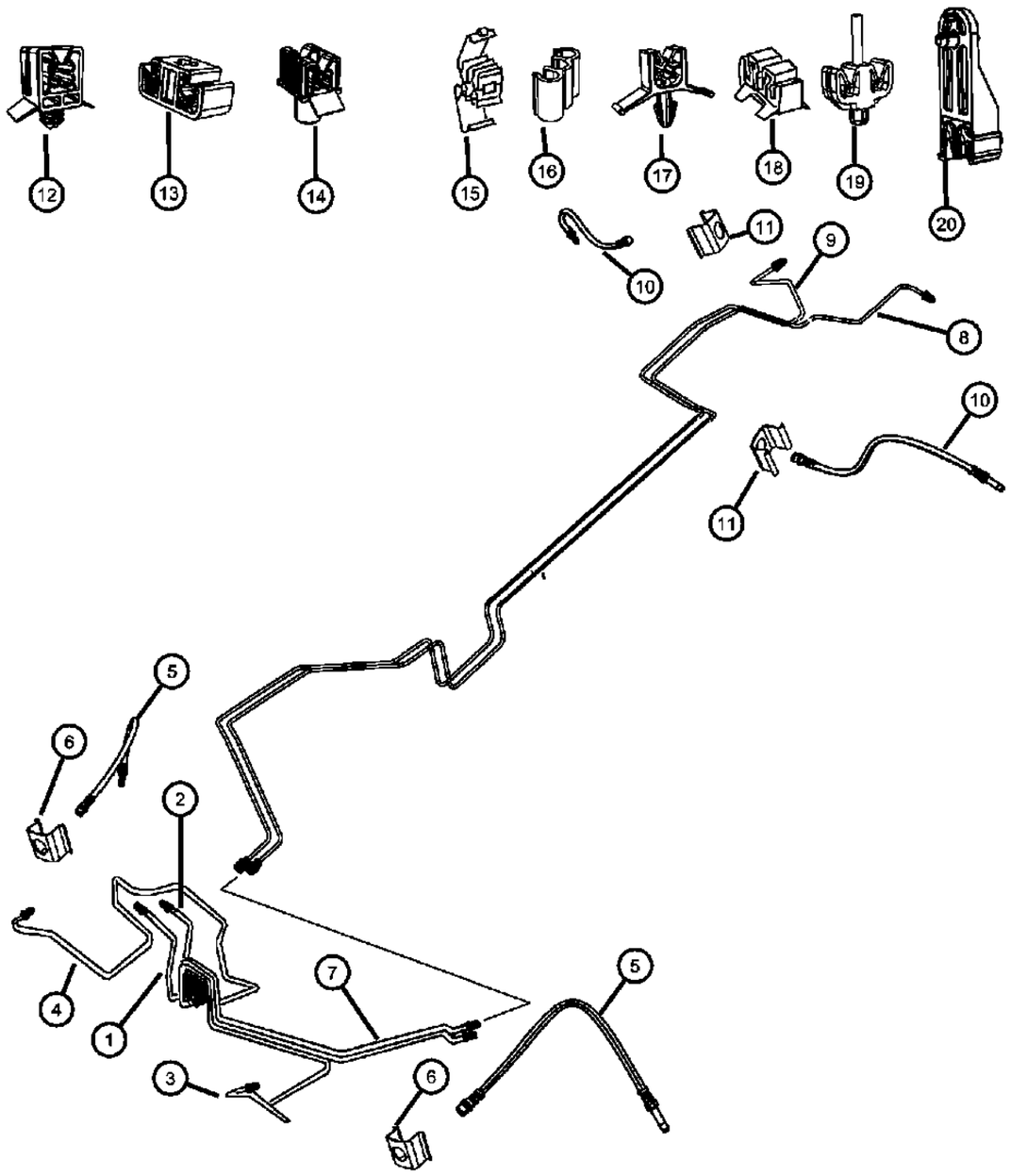

ITEM	PART NUMBER	QTY	LINE	SERIES	BODY	ENGINE	TRANS	TRIM	DESCRIPTION
NOTE:BRAKE LINES ARE TO BE ADAPTED OR MODIFIED TO FIT. BRAKE LINE FITTINGS NOT SERVICED, MUST ORDER BRAKE LINE.									
1	68013575AA	1	2, 3, 6, 7						TUBE, Brake, Master Cylinder To Hydraulic Unit Connection [HZ1] / See Note, Right
2	68013579AA	1	2, 3, 6, 7						TUBE, Brake, Master Cylinder To Hydraulic Unit Connection [HZ1] / See Note, Left
3	05133717AA	1	2, 3, 6, 7						TUBE, Brake, Hydraulic Unit To Hose Bracket [VL] [4.75x7x1590 MM] / See Note, Left
4	05136111AA	1	2, 3, 6, 7						TUBE, Brake, Hydraulic Assembly To Hose Bracket / [RF], Right
5	68013581AA	2	2, 3, 6, 7						HOSE, BrakeRight & Left
6	05098140AA	2	2, 3, 6, 7		13, 15, 17, 53, 55				CLIP, Spring, Brake Hose To Bracket, Right & Left
7	05133712AA	2	2, 3, 6, 7						TUBE, Brake, Hydraulic Unit To Separation Point / [HL] / [4.75x0.7x1395 MM] / See Note, Right & Left
8	68013599AA	1	2, 6		13, 53				TUBE, Brake, From Separation Point At Front To Left Rear Axle
9	68013594AA	1	2, 6		13, 53				TUBE, Brake, From Separation Point At Front To Right Rear Axle
10	68013582AA	2	2, 6		13, 15, 17, 53, 55				HOSE, Brake, Rear Axle Hose, Right & Left
11	05098140AA	2	2, 3, 6, 7		13, 15, 17, 53, 55				CLIP, Spring, Brake Hose To Bracket
12	68011037AA	1	2, 3, 6, 7		13, 15, 17, 53, 55				RETAINER, Brake Line Holder
13	68013615AA	1	2, 3, 6, 7						RETAINER, Brake Line Holder
14	68011033AA	1	2, 3, 6, 7						RETAINER, Brake Line Holder
15	68013611AA	1	2, 3, 6, 7						CLAMP, Brake, Brake Line
16	05119689AA	1	2, 3, 6, 7		13, 15, 17, 53, 55				CLIP, Brake Line
17	05119329AA	4	2, 3, 6, 7		13, 15, 17, 53, 55				CLIP, Brake Line
18	68013612AA	3	2, 3, 6, 7						RETAINER
19	68013613AA	3	2, 3, 6, 7						RETAINER
20	68013614AA	4	2, 3, 6, 7						BRACKET

SPRINTER (VB)

SERIES	LINE	BODY	ENGINE	TRANSMISSION
L = LOWLINE	3 = HD DODGE 2WD 6 = Lt. Duty DODGE 4WD 2 = Med. Duty DODGE 2WD 7 = Med. Duty DODGE 4WD	17 = VAN WHEEL BASE 7 55 = WAGON WHEEL BASE 5 15 = VAN WHEEL BASE 5 53 = 119 WB 13 = 119 WB 05 = CAB CHASSIS WHEEL BASE 5 03 = CAB CHASSIS WHEEL BASE 3	EG2 = 3.5L V6 Gas Engine EXM = 3.0L V6 Turbo Diesel Engine	DGZ = 5-Speed Auto W5A380 Transmission

Brake Tubes,Rear
Figure 5-521

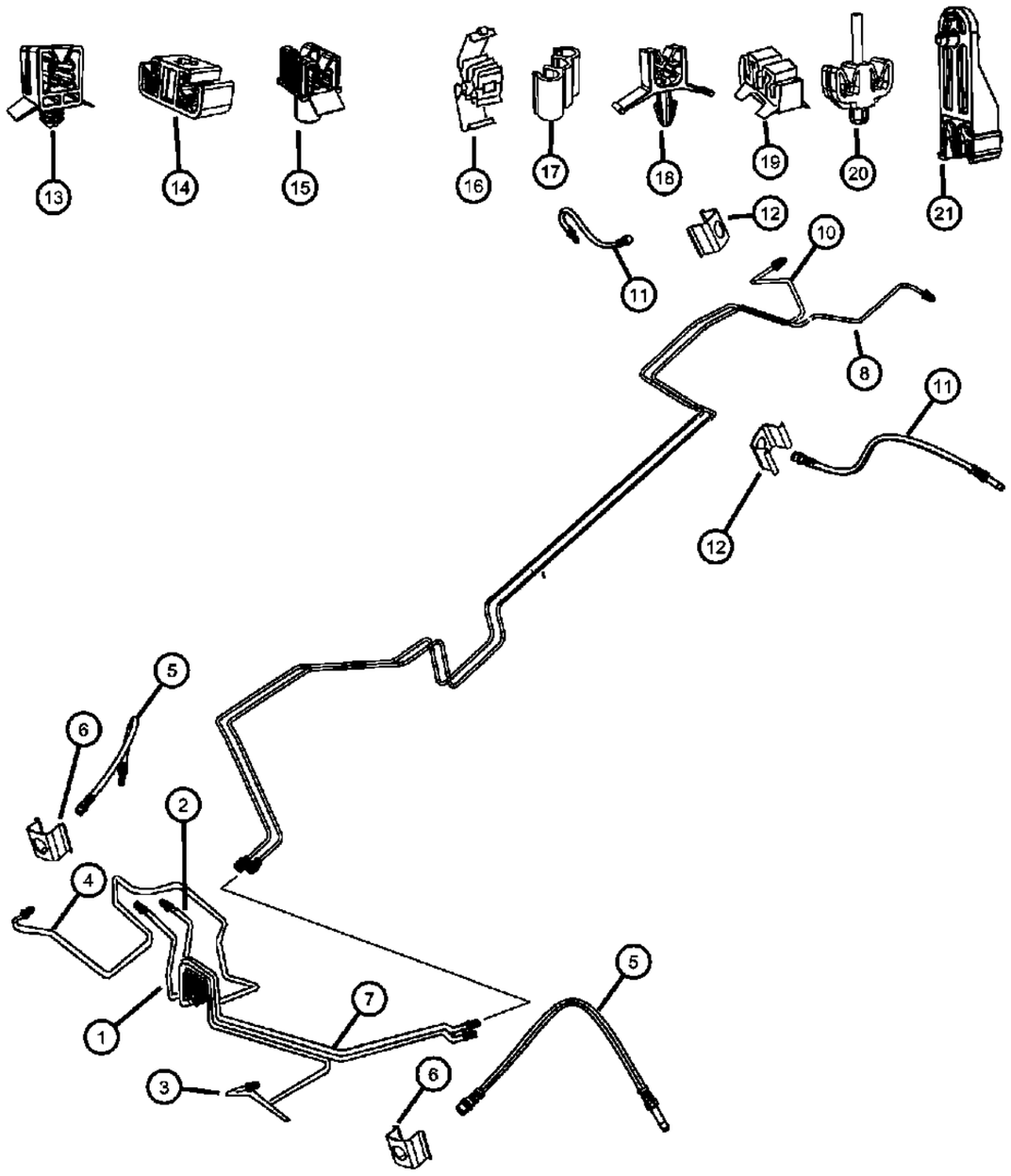

ITEM	PART NUMBER	QTY	LINE	SERIES	BODY	ENGINE	TRANS	TRIM	DESCRIPTION
NOTE:BRAKE LINES ARE TO BE ADAPTED OR MODIFIED TO FIT. BRAKE LINE FITTINGS NOT SERVICED, MUST ORDER BRAKE LINE.									
1	68013575AA	1	2, 3, 6, 7						TUBE, Brake, Master Cylinder To Hydraulic Unit Connection [HZ2] / See Note
2	68013579AA	1	2, 3, 6, 7						TUBE, Brake, Master Cylinder To Hydraulic Unit Connection [HZ1] / See Note
3	05133717AA	1	2, 3, 6, 7						TUBE, Brake, Hydraulic Unit [VL] To Hose Bracket [4.75x0.7x1590 MM] / See Note, Left
4	05136111AA	1	2, 3, 6, 7						TUBE, Brake, Hydraulic Assembly To Hose [RF] / See Note, Right
5	68013581AA	2	2, 3, 6, 7						HOSE, Brake, Brake Hose, Right & Left
6	05098140AA	2	2, 3, 6, 7		13, 15, 17, 53, 55				CLIP, Spring, Brake Hose To Bracket
7	05133712AA	2	2, 3, 6, 7						TUBE, Brake, [HL] Hydraulic Unit To Separation Point [4.75x0.7x1395 MM] / See Note
8	04862640AA	1	3, 7		13, 53				TUBE, Brake
-9	05125769AA	1	3, 7						NUT, Brake Line End Nut
10	68013620AA	1	3, 7		15, 17, 55				TUBE, Brake, From Separation Point To Right Rear Axle / See Note, Right
11	68013583AA	2	3, 7						HOSE, BrakeRight & Left
12	05098140AA	2	2, 3, 6, 7		13, 15, 17, 53, 55				CLIP, Spring, Brake Hose To Bracket
13	68011037AA	1	2, 3, 6, 7		13, 15, 17, 53, 55				RETAINER, Brake Line Holder
14	68013615AA	1	2, 3, 6, 7						RETAINER, Brake Line Holder
15	68011033AA	1	2, 3, 6, 7						RETAINER, Brake Line Holder
16	68013611AA	1	2, 3, 6, 7						CLAMP, Brake
17	05119689AA	1	2, 3, 6, 7		13, 15, 17, 53, 55				CLIP, Brake Line, Brake Line Holder
18	05119329AA	4	2, 3, 6, 7		13, 15, 17, 53, 55				CLIP, Brake Line
19	68013612AA	3	2, 3, 6, 7						RETAINER
20	68013613AA	3	2, 3, 6, 7						RETAINER
21	68013614AA	4	2, 3, 6, 7						BRACKET

SPRINTER (VB)

SERIES	LINE	BODY	ENGINE	TRANSMISSION
L = LOWLINE	3 = HD DODGE 2WD 6 = Lt. Duty DODGE 4WD 2 = Med. Duty DODGE 2WD 7 = Med. Duty DODGE 4WD	17 = VAN WHEEL BASE 7 55 = WAGON WHEEL BASE 5 15 = VAN WHEEL BASE 5 53 = 119 WB 13 = 119 WB 05 = CAB CHASSIS WHEEL BASE 5 03 = CAB CHASSIS WHEEL BASE 3	EG2 = 3.5L V6 Gas Engine EXM = 3.0L V6 Turbo Diesel Engine	DGZ = 5-Speed Auto W5A380 Transmission

Brake Tubes,Rear
Figure 5-522

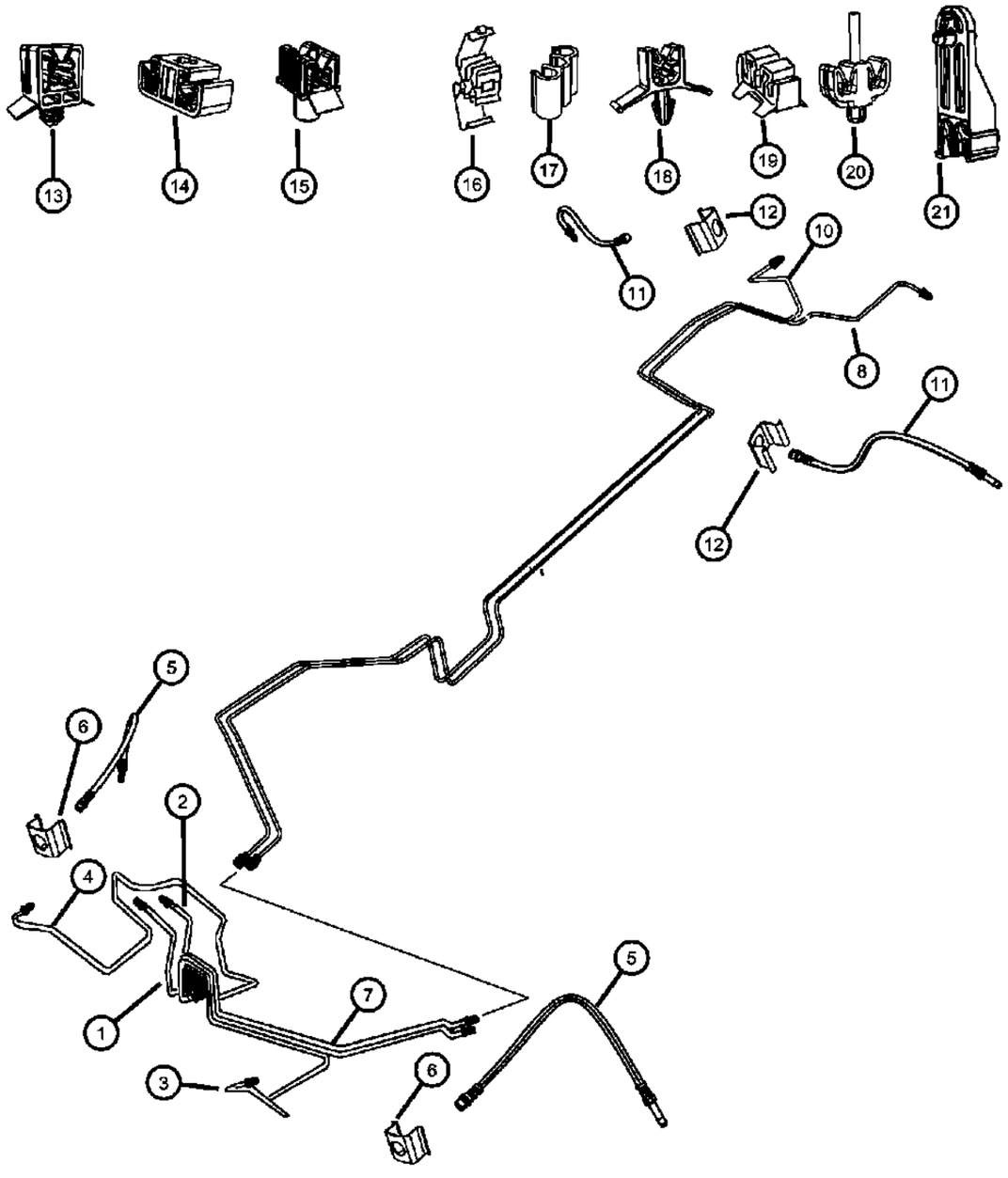

ITEM	PART NUMBER	QTY	LINE	SERIES	BODY	ENGINE	TRANS	TRIM	DESCRIPTION
NOTE:BRAKE LINES ARE TO BE ADAPTED OR MODIFIED TO FIT. BRAKE LINE FITTINGS NOT SERVICED, MUST ORDER BRAKE LINE.									
1	68013575AA	1	2, 3, 6, 7						TUBE, Brake, Master Cylinder To Hydraulic Unit Connection [HZ2] / See Note
2	68013579AA	1	2, 3, 6, 7						TUBE, Brake, Master Cylinder To Hydraulic Unit Connection [HZ1] / See Note
3	05133717AA	1	3, 7		03, 05				TUBE, Brake, Hydraulic Unit [VL] To Hose Bracket [4.75x0.7x1590 MM] / See Note, Left
4	05136111AA	1	3, 7		03, 05				TUBE, Brake, Hydraulic Assembly To Hose [RF] / See Note, Right
5	68013581AA	2	2, 3, 6, 7						HOSE, Brake, Brake Hose, Right & Left
6	05098140AA	2	3, 7		03, 05				CLIP, Spring, Brake Hose To Bracket
7	05133712AA	2	2, 3, 6, 7						TUBE, Brake, [HL] Hydraulic Unit To Separation Point [4.75x0.7x1395 MM] / See Note, Right & Left, Front
8									TUBE, Brake
	68013607AA	1	3, 7		03				Separation Point To Left Rear Axle, Left
	68013608AA	1	3, 7		05				Separation Point To Left Rear Axle, Left
-9	05125769AA	1	3, 7						NUT, Brake Line End Nut
10									TUBE, Brake
	05133729AA	1	3, 7		03				Separation Point To Rear Axle, Right
	05133731AA	1	3, 7		05				Separation Point To Rear Axle, Right
11	68013583AA	2	3, 7						HOSE, BrakeRight & Left
12	68011037AA	1	3, 7		03, 05				RETAINER, Brake Line Holder
13	68013615AA	1	2, 3, 6, 7						RETAINER, Brake Line Holder
14	68013615AA	1	2, 3, 6, 7						RETAINER, Brake Line Holder
15	68011033AA	1	2, 3, 6, 7						RETAINER, Brake Line Holder
16	68013611AA	1	3, 7		03, 05				CLAMP, Brake
17	05119329AA	4	3, 7		03, 05				CLIP, Brake Line, Brake Line Holder
18	68013612AA	3	2, 3, 6, 7						RETAINER, Brake Line Holder
19	68013612AA	3	2, 3, 6, 7						RETAINER

SPRINTER (VB)

SERIES	LINE	BODY	ENGINE	TRANSMISSION
L = LOWLINE	3 = HD DODGE 2WD 6 = Lt. Duty DODGE 4WD 2 = Med. Duty DODGE 2WD 7 = Med. Duty DODGE 4WD	17 = VAN WHEEL BASE 7 55 = WAGON WHEEL BASE 5 15 = VAN WHEEL BASE 5 53 = 119 WB 13 = 119 WB 05 = CAB CHASSIS WHEEL BASE 5 03 = CAB CHASSIS WHEEL BASE 3	EG2 = 3.5L V6 Gas Engine EXM = 3.0L V6 Turbo Diesel Engine	DGZ = 5-Speed Auto W5A380 Transmission

Brake Tubes,Rear
Figure 5-522

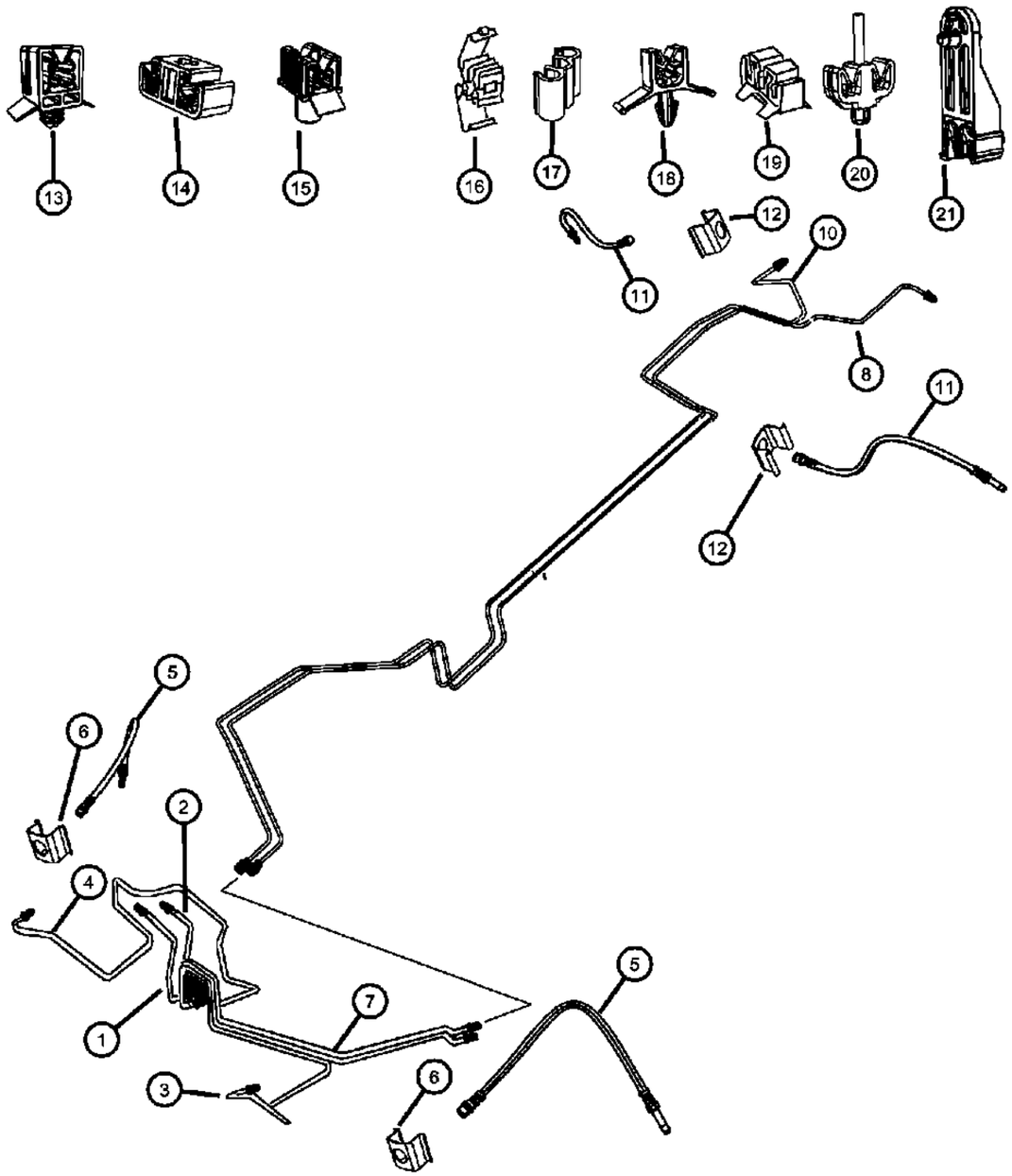

ITEM	PART NUMBER	QTY	LINE	SERIES	BODY	ENGINE	TRANS	TRIM	DESCRIPTION
20	68013613AA	3	2, 3, 6, 7						RETAINER
21	68013614AA	4	2, 3, 6, 7						BRACKET

SPRINTER (VB)

SERIES	LINE	BODY	ENGINE	TRANSMISSION
L = LOWLINE	3 = HD DODGE 2WD 6 = Lt. Duty DODGE 4WD 2 = Med. Duty DODGE 2WD 7 = Med. Duty DODGE 4WD	17 = VAN WHEEL BASE 7 55 = WAGON WHEEL BASE 5 15 = VAN WHEEL BASE 5 53 = 119 WB 13 = 119 WB 05 = CAB CHASSIS WHEEL BASE 5 03 = CAB CHASSIS WHEEL BASE 3	EG2 = 3.5L V6 Gas Engine EXM = 3.0L V6 Turbo Diesel Engine	DGZ = 5-Speed Auto W5A380 Transmission

Pedal,Brake,Auto Trans
Figure 5-605

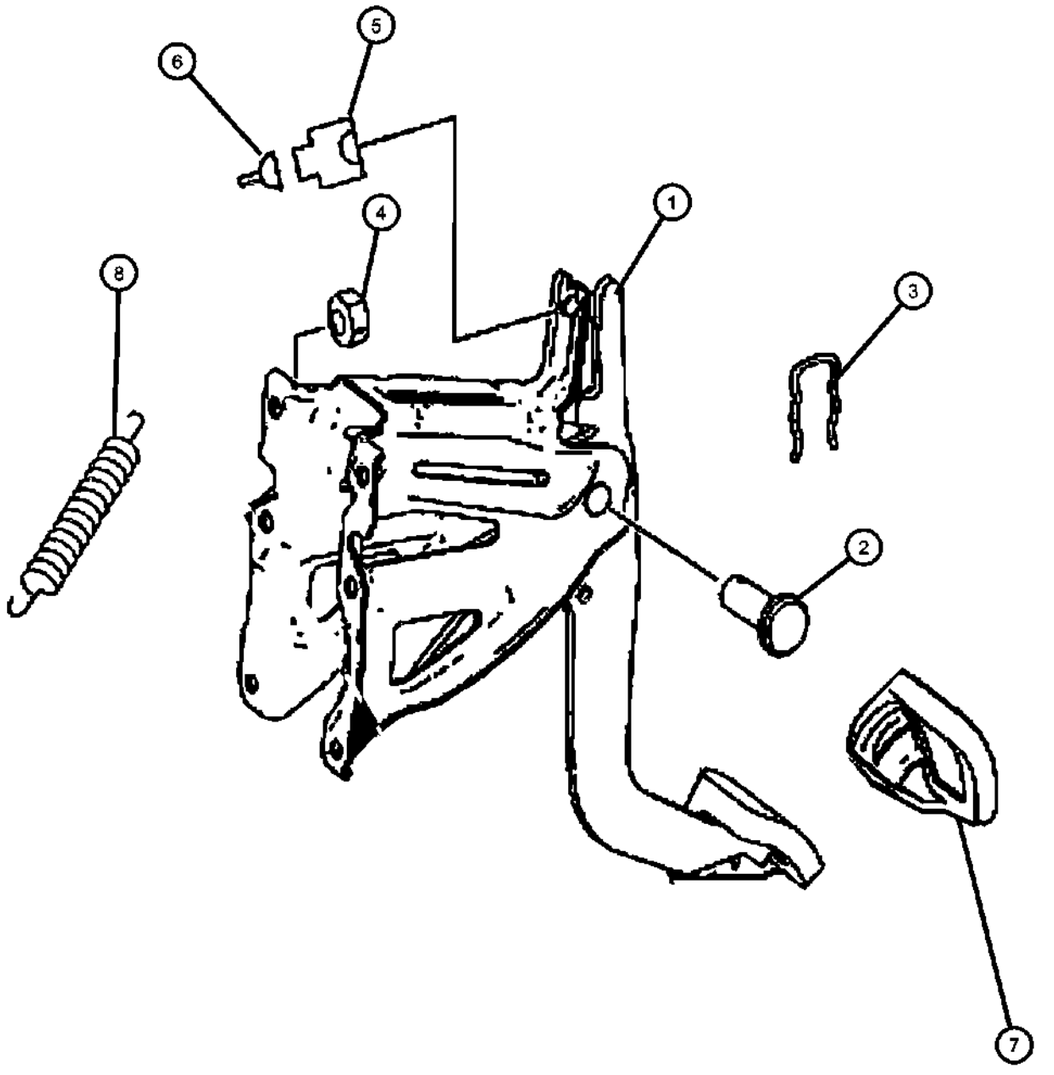

ITEM	PART NUMBER	QTY	LINE	SERIES	BODY	ENGINE	TRANS	TRIM	DESCRIPTION
Note:Mounting Bracket Only Serviced With Brake Pedal									
1	68013455AA	1	2, 3, 6, 7						PEDAL, Brake, Includes Mounting Braket / See Note
2	68013459AA	1	2, 3, 6, 7						PIN, Brake Pedal Pivot Shaft
3	05097670AA	1	2, 3, 6, 7						CLIP, Spring
4	06105169AA	1	2, 3, 6, 7						NUT
5	68011261AA	1	2, 3, 6, 7						CONNECTOR, Stop Light Switch Connectop [S 9/1]
6	05103892AA	1	2, 3, 6, 7						TERMINAL, Terminal Stop Light Switch [0.5/1.0 MM2 MCP: S 9/1]
7	68013457AA	1	2, 3, 6, 7						PAD, Pedal
8	68013458AA	1	2, 3, 6, 7						SPRING

SPRINTER (VB)

SERIES	LINE	BODY	ENGINE	TRANSMISSION
L = LOWLINE	3 = HD DODGE 2WD 6 = Lt. Duty DODGE 4WD 2 = Med. Duty DODGE 2WD 7 = Med. Duty DODGE 4WD	17 = VAN WHEEL BASE 7 55 = WAGON WHEEL BASE 5 15 = VAN WHEEL BASE 5 53 = 119 WB 13 = 119 WB 05 = CAB CHASSIS WHEEL BASE 5 03 = CAB CHASSIS WHEEL BASE 3	EG2 = 3.5L V6 Gas Engine EXM = 3.0L V6 Turbo Diesel Engine	DGZ = 5-Speed Auto W5A380 Transmission

Park Brake Lever and Cables,Front,FWD/RWD/AWD
Figure 5-705

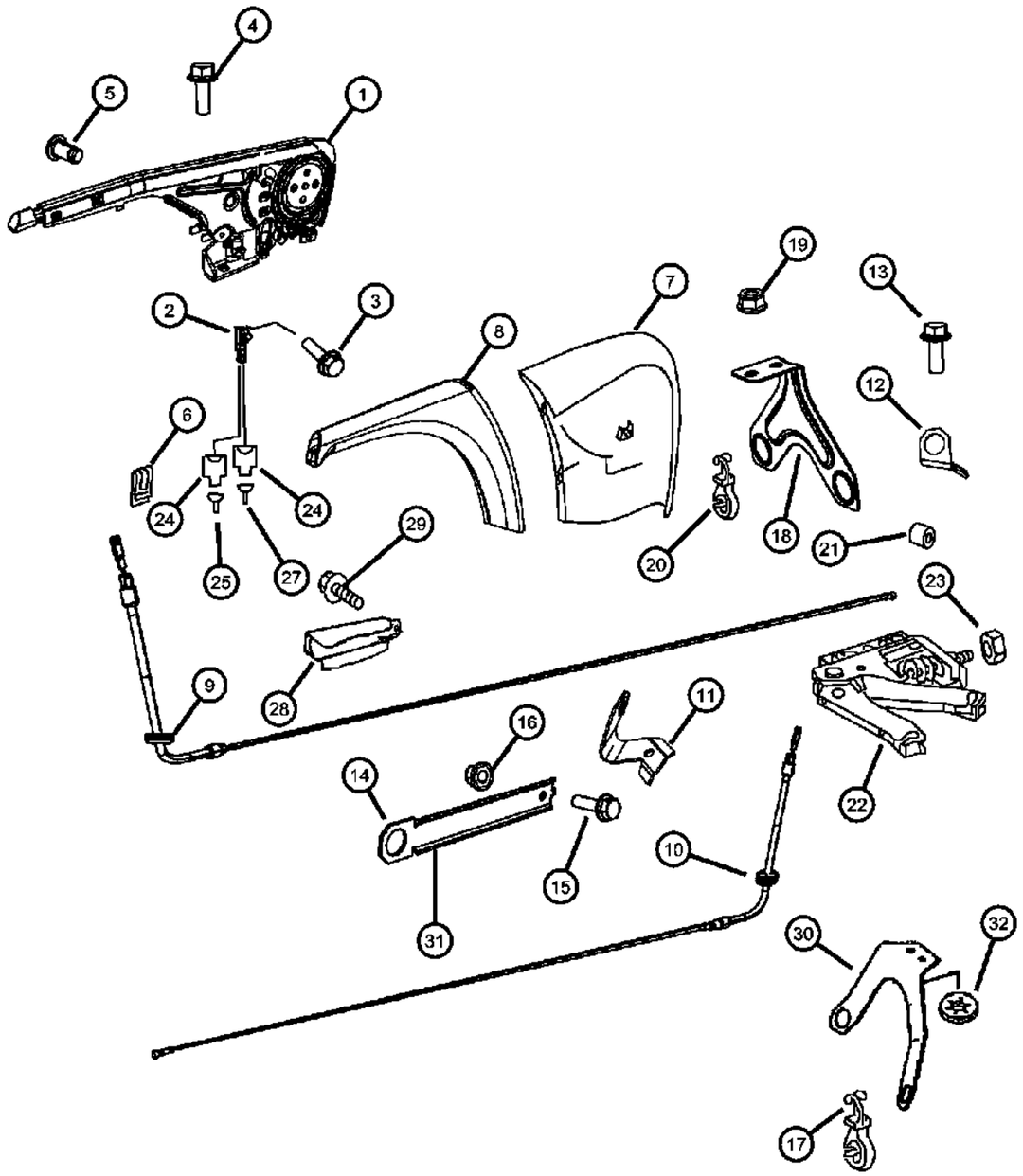

ITEM	PART NUMBER	QTY	LINE	SERIES	BODY	ENGINE	TRANS	TRIM	DESCRIPTION
NOTE:									
Sales Code:									
[DGZ]=5 Speed Automatic Transmission - [W5A380]									
[EGZ]=3.5L V-6 Gas Engine [Mercedes Benz]									
[EXM]=3.0L Turbo Diesel Engine [Mercedes Benz]									
1	68013464AA	1	2, 3, 6, 7						LEVER, Parking Brake
2									SWITCH, Parking Brake
	05103540AA	1	3, 7		03, 05				Hand Brake Tell-Tale Lamp
		1	2, 3, 6, 7		13, 15, 17, 53, 55				Hand Brake Tell-Tale Lamp
3	05175204AA	1	2, 3, 6, 7						SCREW, Switch Fastening [M5x12]
4									BOLT, Hex Flange Head, M10x1.50x25.00
	06104215AA	2	3, 7		03, 05				Mounting, Lever To Seat Frame [M10x25]
		2	2, 3, 6, 7		13, 15, 17, 53, 55				Mounting, Lever To Seat Frame [M10x25]
5	05140886AA	1	2, 3, 6, 7						PIN, Parking Brake Handle, Brake Cable To Hand Brake Lever
6	05126243AA	1	2, 3, 6, 7						CLIP, Retaining, Pin To Hand Brake Lever
7	68013465AA	1	2, 3, 6, 7						COVER
8	68013466AA	1	2, 3, 6, 7						HANDLE
9									CABLE, Parking Brake
	68013473AA	1	2, 3, 6, 7		03, 13, 53				Front
	68013474AA	1	2, 3, 6, 7		05, 15, 17, 55				Front
10	68013780AA	2	2, 6		13, 15, 17, 53, 55				CABLE, Parking Brake
11	68013467AA	1	2, 3, 6, 7						BRACKETLeft
12	68013468AA	1	2, 3, 6, 7						BRACKET
13									NUT
	68004878AA	2	3, 7		03, 05				[M6]
		2	2, 3, 6, 7		13, 15, 17, 53, 55				[M6]
14									BRACKET
	05119274AA	1	3, 7		03, 05				Left
		1	2, 6		13, 15, 17, 53, 55				Left

SPRINTER (VB)

SERIES	LINE	BODY	ENGINE	TRANSMISSION
L = LOWLINE	3 = HD DODGE 2WD 6 = Lt. Duty DODGE 4WD 2 = Med. Duty DODGE 2WD 7 = Med. Duty DODGE 4WD	17 = VAN WHEEL BASE 7 55 = WAGON WHEEL BASE 5 15 = VAN WHEEL BASE 5 53 = 119 WB 13 = 119 WB 05 = CAB CHASSIS WHEEL BASE 5 03 = CAB CHASSIS WHEEL BASE 3	EG2 = 3.5L V6 Gas Engine EXM = 3.0L V6 Turbo Diesel Engine	DGZ = 5-Speed Auto W5A380 Transmission

Park Brake Lever and Cables,Front,FWD/RWD/AWD
Figure 5-705

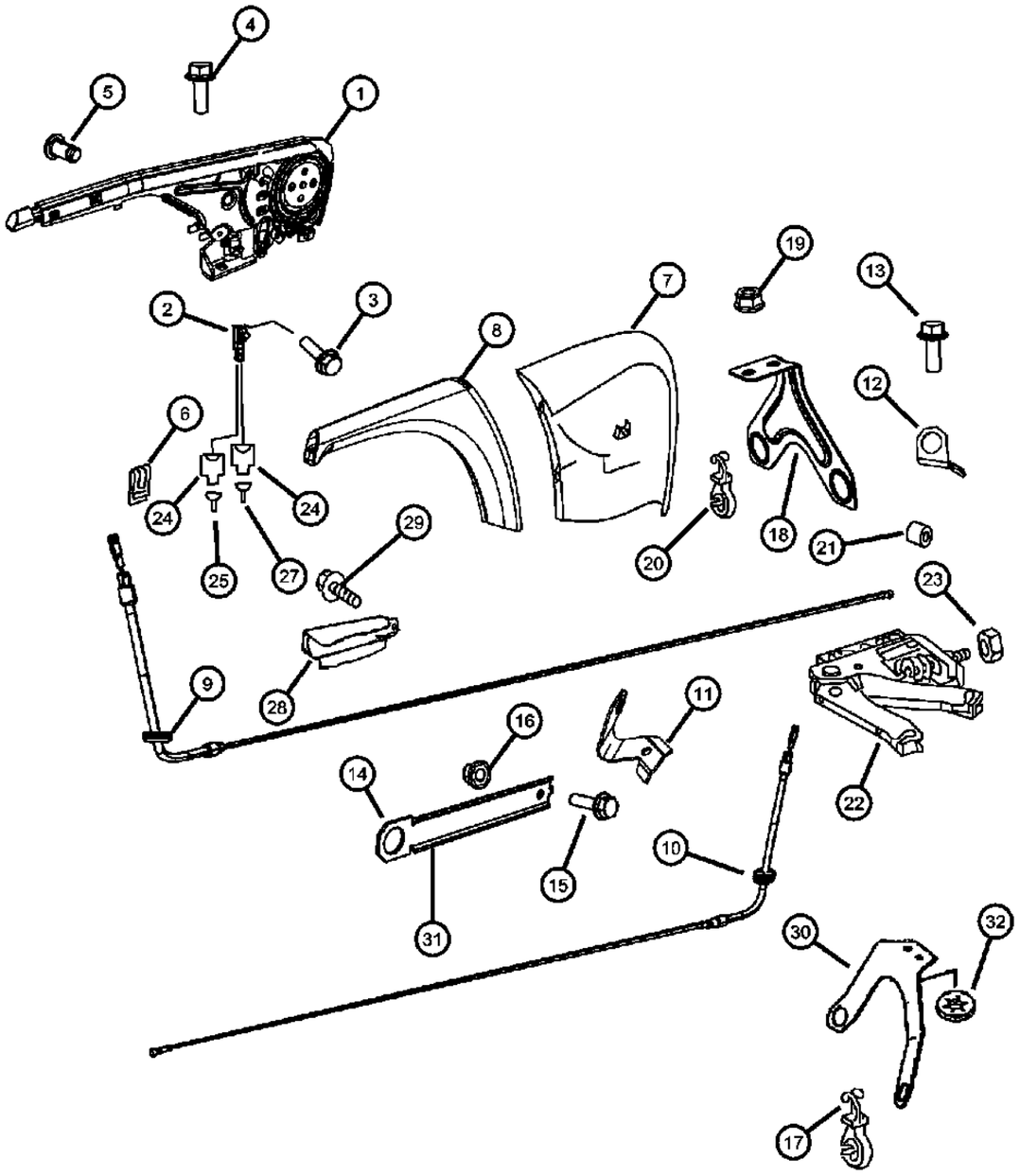

ITEM	PART NUMBER	QTY	LINE	SERIES	BODY	ENGINE	TRANS	TRIM	DESCRIPTION
	05119277AA	1	3, 7		03, 05				Right
		1	2, 6		13, 15, 17, 53, 55				Right
15									SCREW
	05073723AB	2	3, 7		03, 05				Bracket To Shock Absorber Bracket [M8x20]
		2	2, 3, 6, 7		13, 15, 17, 53, 55				Bracket To Shock Absorber Bracket [M8x20]
16	06105169AA	1	2, 3, 6, 7						NUT, Bracket To Shock Absorber Bracket [M8]
17	05119283AA	4	2, 3, 6, 7						CLIP, Parking Brake Cable, At Bracket
18	68013470AA	1	2, 6		13, 53				BRACKET, To Under Floor Center
19									NUT
	68004878AA	2	2, 3, 6, 7		13, 15, 17, 53, 55				Bracket To Substructure [M6]
		2	3, 7		03, 05				Bracket To Substructure [M6]
20	05119283AA	4	2, 3, 6, 7						CLIP, Parking Brake Cable, At Bracket
21									PIN, PIN
	05098414AA	2	2, 6		13, 15, 17, 53, 55				
		2	3, 7		03, 05, 13, 15, 17				
22									ADJUSTER, Parking Brake
	68013478AA	1	2, 3, 6, 7						
	68013479AA	1	3, 7		03, 05				With [2ZD]
		1	3, 7		13, 15, 17				With [2ZD]
23									NUT
	05126206AA	1	2, 3, 6, 7						To Adjuster [M8-8]
	06105170AA	2	2, 3, 6, 7						Adjuster To Bearing Bracket [M10]
24									CONNECTOR
	05120696AA	1	2, 3, 6, 7		03, 05, 13, 15, 17				Parking Brake Inspec tion Switch 1 - Pin [S12]
		1	2, 3, 6, 7		53, 55, 57				Parking Brake Inspec tion Switch 1 - Pin [S12]
25									TERMINAL, Female

SPRINTER (VB)

SERIES	LINE	BODY	ENGINE	TRANSMISSION
L = LOWLINE	3 = HD DODGE 2WD 6 = Lt. Duty DODGE 4WD 2 = Med. Duty DODGE 2WD 7 = Med. Duty DODGE 4WD	17 = VAN WHEEL BASE 7 55 = WAGON WHEEL BASE 5 15 = VAN WHEEL BASE 5 53 = 119 WB 13 = 119 WB 05 = CAB CHASSIS WHEEL BASE 5 03 = CAB CHASSIS WHEEL BASE 3	EG2 = 3.5L V6 Gas Engine EXM = 3.0L V6 Turbo Diesel Engine	DGZ = 5-Speed Auto W5A380 Transmission

Park Brake Lever and Cables,Front,FWD/RWD/AWD
Figure 5-705

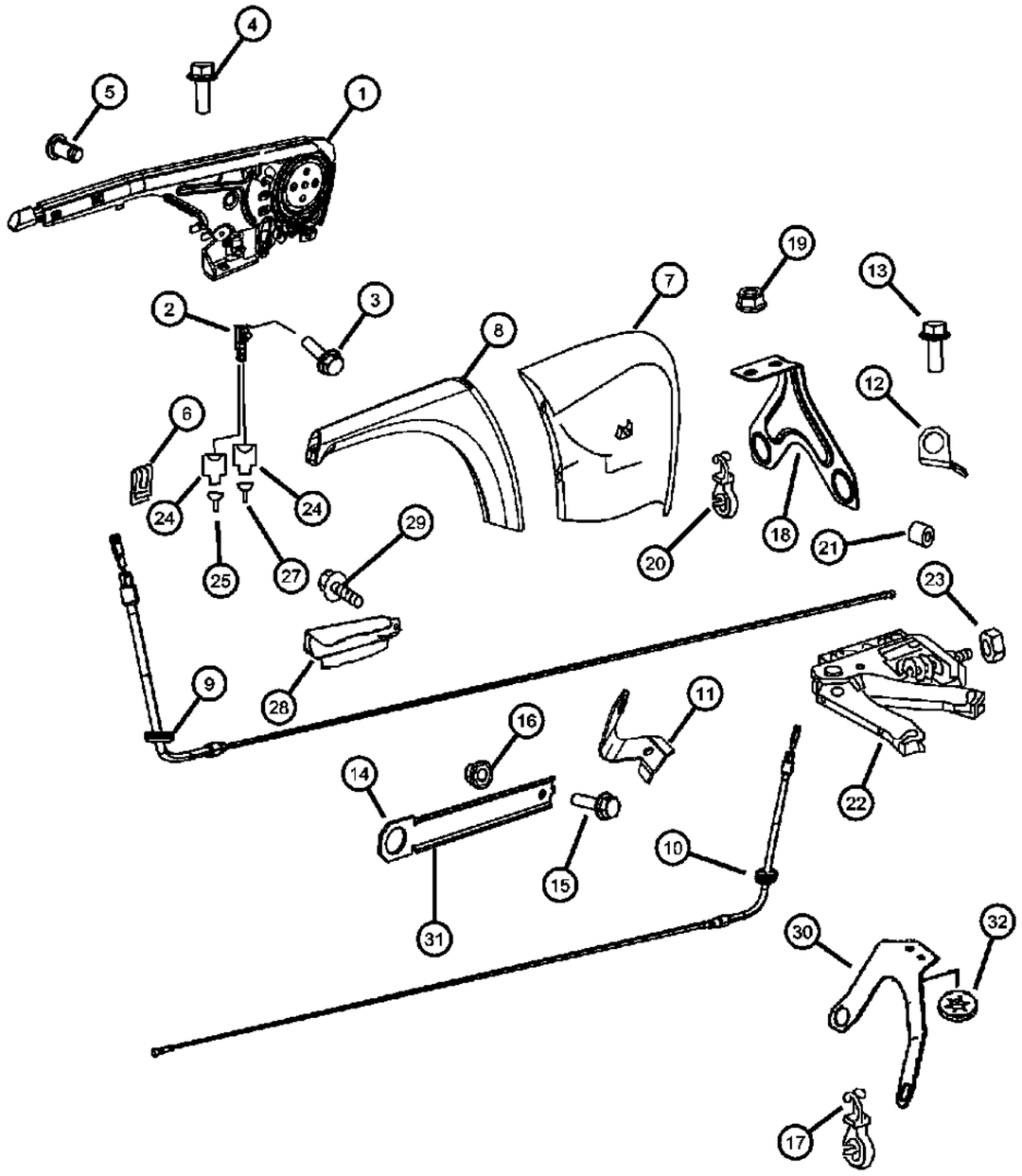

ITEM	PART NUMBER	QTY	LINE	SERIES	BODY	ENGINE	TRANS	TRIM	DESCRIPTION
	05133365AA	1	2, 3, 6, 7		03, 05, 13, 15, 17				[S12]
		1	2, 3, 6, 7		53, 55, 57				[S12]
-26									TERMINAL
	05133504AA	1	2, 3, 6, 7		03, 05, 13, 15, 17				Parking Brake Inspection Switch [S12]
		1	2, 3, 6, 7		53, 55, 57				Parking Brake Inspection Switch [S12]
27									TERMINAL
	05133367AA	1	2, 3, 6, 7		03, 05, 13, 15, 17				Terminal [S12]
		1	2, 3, 6, 7		53, 55, 57				Terminal [S12]
28									BOOT
	68013476AA	1	3, 7						Right
	68013477AA	1	3, 7						Left
29									SCREW
	06104140AA	2	3, 7		03, 05				
		2	2, 3, 6, 7		13, 15, 17, 53, 55				
30	68013471AA	1	3, 7						BRACKET, Cable To Frame
31	68026526AA	2	3, 7						BRACKET, Parking Brake
32	68026526AA	2							WASHER, Lock, (NOT SERVICED)

SPRINTER (VB)

SERIES	LINE	BODY	ENGINE	TRANSMISSION
L = LOWLINE	3 = HD DODGE 2WD 6 = Lt. Duty DODGE 4WD 2 = Med. Duty DODGE 2WD 7 = Med. Duty DODGE 4WD	17 = VAN WHEEL BASE 7 55 = WAGON WHEEL BASE 5 15 = VAN WHEEL BASE 5 53 = 119 WB 13 = 119 WB 05 = CAB CHASSIS WHEEL BASE 5 03 = CAB CHASSIS WHEEL BASE 3	EG2 = 3.5L V6 Gas Engine EXM = 3.0L V6 Turbo Diesel Engine	DGZ = 5-Speed Auto W5A380 Transmission

Park Brake Assemby,Rear Disc,FWD/RWD/AWD
Figure 5-725

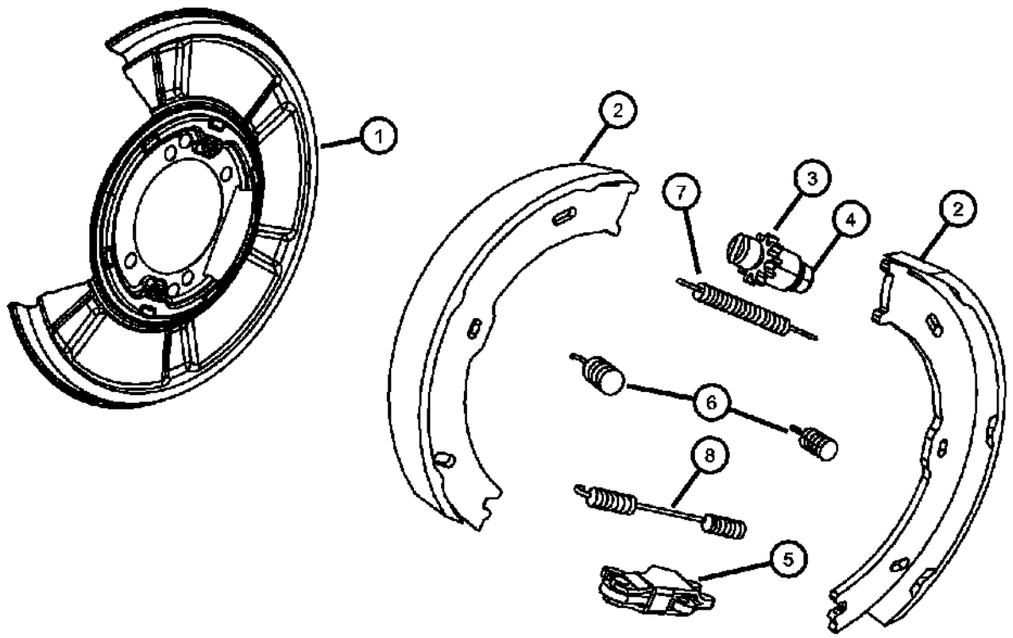

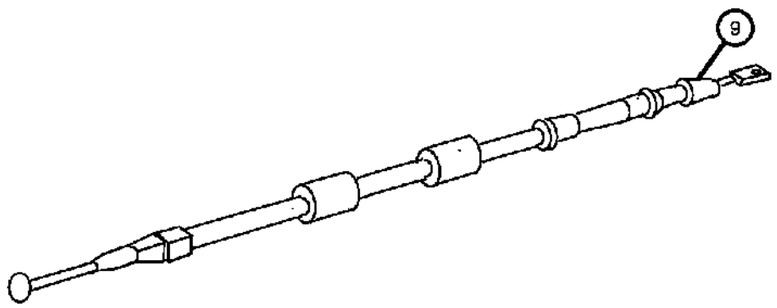

ITEM	PART NUMBER	QTY	LINE	SERIES	BODY	ENGINE	TRANS	TRIM	DESCRIPTION
NOTE: Sales Code: [DGZ]=5 Speed Automatic Transmission - [W5A380] [EGZ]=3.5L V-6 Gas Engine [Mercedes Benz] [EXM]=3.0L Turbo Diesel Engine [Mercedes Benz]									
1	68013766AA	2	2, 6		13, 15, 17, 53, 55				BACKING PLATE, With Special Version Code [42-504012 / 10]
2	68019140AA	1	2, 6		13, 15, 17, 53, 55				SHOE AND LINING, Parking Brake, Includes: All Moving Parts / Special Version Code [42-504016 / 07]
3	05139234AA	2	2, 6		13, 15, 17, 53, 55				ADJUSTER, Parking Brake, With Special Version Code [42-504016 / 07]
4	05139233AA	2	2, 6		13, 15, 17, 53, 55				BUSHING, With Special Version Code [42-504016 / 07]
5	05101691AA	2	2, 6		13, 15, 17, 53, 55				PLATE, Brake Shoe Guide, With Special Version Code [42-504016 / 07]
6	05098005AA	4	2, 6		13, 15, 17, 53, 55				SPRING, Brake Shoe Hold Down, With Special Version Code [42-504016 / 07]
7	05098006AA	2	2, 6		13, 15, 17, 53, 55				SPRING, Brake Shoe to Shoe, With Special Version Code [42-504016 / 07]
8	05139480AA	2	2, 6		13, 15, 17, 53, 55				SPRING, Brake Shoe to Shoe, With Special Version Code [42-504016 / 07]
9	68013780AA	2	2, 6		13, 15, 17, 53, 55				CABLE, Parking Brake, With Special Version Code [42-504013 / 06]
-10	05098414AA	2	2, 6		13, 15, 17, 53, 55				PIN, PIN

SPRINTER (VB)

SERIES	LINE	BODY	ENGINE	TRANSMISSION
L = LOWLINE	3 = HD DODGE 2WD 6 = Lt. Duty DODGE 4WD 2 = Med. Duty DODGE 2WD 7 = Med. Duty DODGE 4WD	17 = VAN WHEEL BASE 7 55 = WAGON WHEEL BASE 5 15 = VAN WHEEL BASE 5 53 = 119 WB 13 = 119 WB 05 = CAB CHASSIS WHEEL BASE 5 03 = CAB CHASSIS WHEEL BASE 3	EG2 = 3.5L V6 Gas Engine EXM = 3.0L V6 Turbo Diesel Engine	DGZ = 5-Speed Auto W5A380 Transmission

Park Brake Assemby,Rear Disc,FWD/RWD/AWD
Figure 5-726

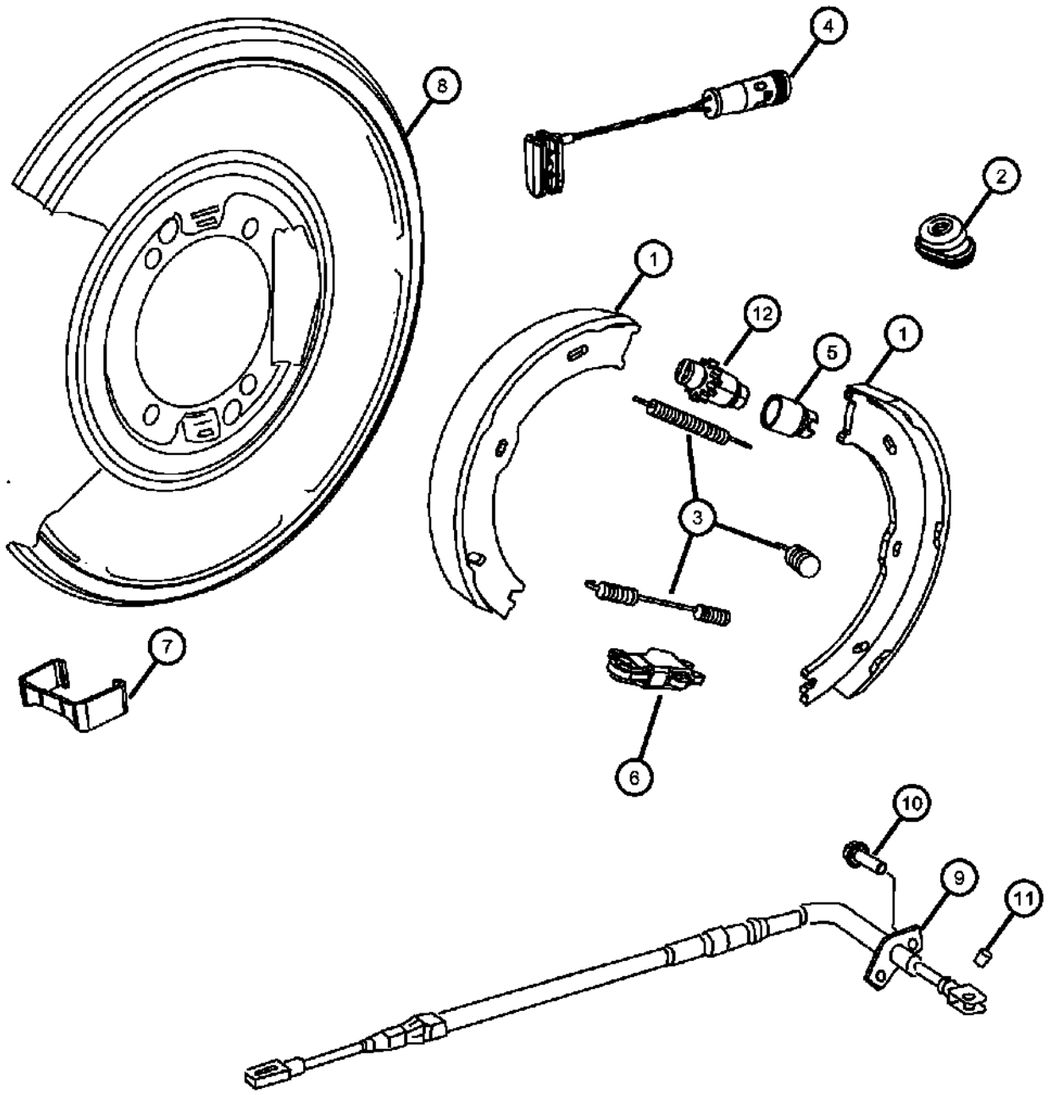

ITEM	PART NUMBER	QTY	LINE	SERIES	BODY	ENGINE	TRANS	TRIM	DESCRIPTION
NOTE:									
Sales Code:									
[DGZ]=5 Speed Automatic Transmission - [W5A380]									
[EGZ]=3.5L V-6 Gas Engine [Mercedes Benz]									
[EXM]=3.0L Turbo Diesel Engine [Mercedes Benz]									
1	68026168AA	1	3, 7		03, 05, 13, 15, 17				SHOE AND LINING, Parking Brake, Note: Shoe Kit Includes Springs, Adjuster & Related Parts, With Special Version Code [42 504016 / 08 / 10]
2	04862657AA	2	3, 7		03, 05, 13, 15, 17				BUSHING, With Special Version Code [42 504016 / 08 / 10]
3	04862656AA	2	3, 7		03, 05, 13, 15, 17				SPRING KIT, Brake Shoe Hold Down, With Special Version Code [42 504016 / 08 / 10]
4	68006717AA	4	3, 7		03, 05, 13, 15, 17				SENSOR, Brake wear
5	68013778AA	2	3, 7		03, 05, 13, 15, 17				BUSHING, With Special Version Code [42 504016 / 08 / 10] & [35 504000 / 04]
6									RETAINER
	04862658AA	1	3, 7		03, 05, 13, 15, 17				With Special Version Code [42 504016 / 08 / 10], Left
	04862660AA	1	3, 7		03, 05, 13, 15, 17				With Special Version Code [42 504016 / 08 / 10], Right
7	68013779AA	1	3, 7		03, 05, 13, 15, 17				PAD, PAD, With Special Version Code [42 504016 / 08 / 10] & [35 504000 / 04]
8									BACKING PLATE
	04862655AA	1	3, 7		03, 05, 13, 15, 17				With Special Version Code [42 504016 / 08 / 10], Left
	04862661AA	1	3, 7		03, 05, 13, 15, 17				With Special Version Code [42 504016 / 08 / 10], Right
9	68013475AA	2	3, 7		03, 05, 13, 15, 17				CABLE, Parking Brake
10	05098124AA	2	3, 7		03, 05, 13, 15, 17				SCREW, With Special Version Code [35 504000/04]
11	05098414AA	2	3, 7		03, 05, 13, 15, 17				PIN, PIN, With Special Version Code [35 504000/04]
12	68013478AA	1	2, 3, 6, 7						ADJUSTER, Parking Brake

SPRINTER (VB)

SERIES	LINE	BODY	ENGINE	TRANSMISSION
L = LOWLINE	3 = HD DODGE 2WD 6 = Lt. Duty DODGE 4WD 2 = Med. Duty DODGE 2WD 7 = Med. Duty DODGE 4WD	17 = VAN WHEEL BASE 7 55 = WAGON WHEEL BASE 5 15 = VAN WHEEL BASE 5 53 = 119 WB 13 = 119 WB 05 = CAB CHASSIS WHEEL BASE 5 03 = CAB CHASSIS WHEEL BASE 3	EG2 = 3.5L V6 Gas Engine EXM = 3.0L V6 Turbo Diesel Engine	DGZ = 5-Speed Auto W5A380 Transmission

Group - 7
Cooling

Group - 7 Cooling

Illustration Title — Group-Fig. No.

Radiator and Related Parts and Turbo Intercooler
Radiator and Related Parts Gas / Diesel ..... Fig. 7 - 105
Fan & Fan Clutch ..... Fig. 7 - 115
Air Charge Cooler ..... Fig. 7 - 175

Water Pump and Related Parts
Water Pump and Related Parts ..... Fig. 7 - 205
Water Pump and Related Parts ..... Fig. 7 - 210

Engine Coolant Reservoir (Bottle)
Coolant Recovery Bottle ..... Fig. 7 - 305
Coolant Recovery Bottle ..... Fig. 7 - 310

Pulleys and Related Parts
Pulleys and Related Parts Gas ..... Fig. 7 - 405
Pulley and Related Parts Diesel ..... Fig. 7 - 410

Drive Belts
Belts, Serpentine and V-Belts ..... Fig. 7 - 505

Transmission Oil Cooler, and Lines
Transmission Oil Cooler and Lines ..... Fig. 7 - 605

007-100 Radiator and Related Parts and Turbo Intercooler	**007-200** Water Pump and Related Parts	**007-300** Engine Coolant Reservoir (Bottle)	**007-400** Pulleys and Related Parts
007-500 Drive Belts	**007-600** Transmission Oil Cooler, and Lines		

Radiator and Related Parts Gas / Diesel
Figure 7-105

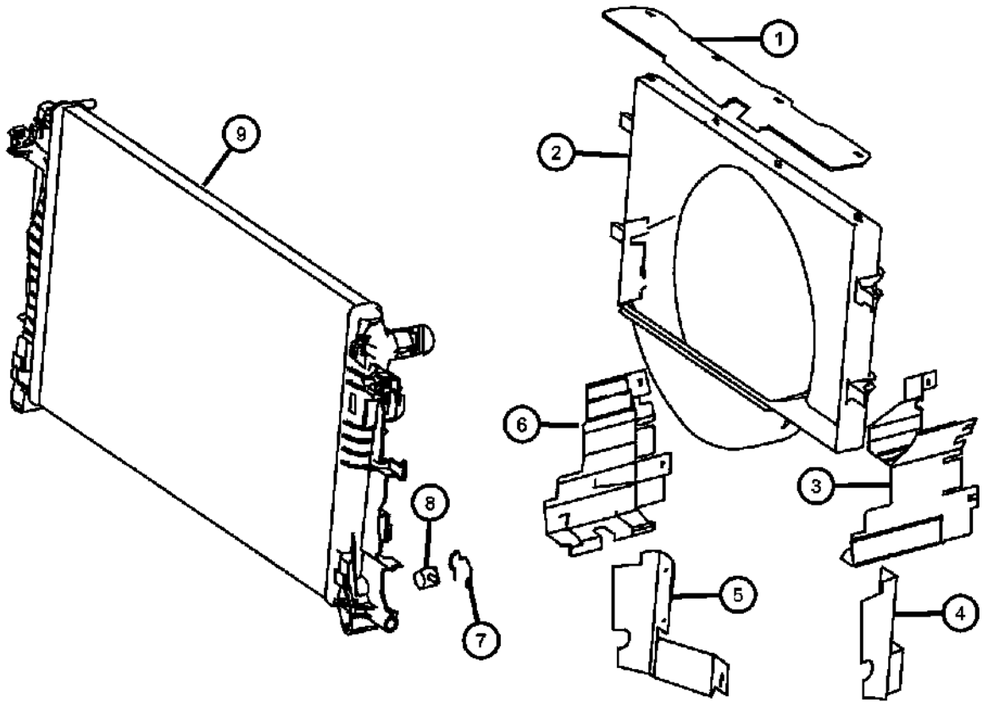

ITEM	PART NUMBER	QTY	LINE	SERIES	BODY	ENGINE	TRANS	TRIM	DESCRIPTION
1									COVER, Radiator
	68013660AA	1	3, 7			EG2, EXM	DGZ		Top
		1	2, 3, 6, 7			EG2, EXM	DGZ		Top
2									SHROUD, Fan
	68013658AA	1	2, 3, 6, 7			EXM	DGZ		
	68013659AA	1	2, 3, 6, 7			EG2	DGZ		
3	68004913AA	1	2, 3, 6, 7			EG2, EXM	DGZ		SHIELD, Side, Radiator CoolingLeft
4									COVER, Radiator
	68004917AA	1	3, 7			EXM	DGZ		Lower Left Hand
		1	2, 3, 6, 7			EXM	DGZ		Lower Left Hand
5									COVER, Radiator
	68004916AA	1	3, 7			EXM	DGZ		Lower Right Hand
		1	2, 3, 6, 7			EXM	DGZ		Lower Right Hand
6	68004914AA	1	2, 3, 6, 7			EG2, EXM	DGZ		SHIELD, Side, Radiator CoolingRight
7	68004816AA	1	2, 3, 6, 7			EG2, EXM	DGZ		CLIP
8	68013632AA	1	2, 3, 6, 7			EG2, EXM	DGZ		DRAINCOCK, Radiator
9	68013630AA	1	2, 3, 6, 7			EG2, EXM	DGZ		RADIATOR

SPRINTER (VB)

SERIES	LINE	BODY	ENGINE	TRANSMISSION
L = LOWLINE	3 = HD DODGE 2WD 6 = Lt. Duty DODGE 4WD 2 = Med. Duty DODGE 2WD 7 = Med. Duty DODGE 4WD	17 = VAN WHEEL BASE 7 55 = WAGON WHEEL BASE 5 15 = VAN WHEEL BASE 5 53 = 119 WB 13 = 119 WB 05 = CAB CHASSIS WHEEL BASE 5 03 = CAB CHASSIS WHEEL BASE 3	EG2 = 3.5L V6 Gas Engine EXM = 3.0L V6 Turbo Diesel Engine	DGZ = 5-Speed Auto W5A380 Transmission

Fan & Fan Clutch
Figure 7-115

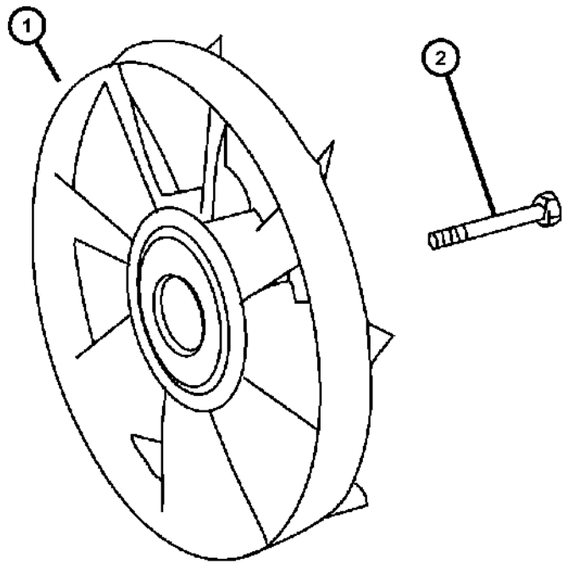

ITEM	PART NUMBER	QTY	LINE	SERIES	BODY	ENGINE	TRANS	TRIM	DESCRIPTION
1									FAN, Cooling
	68012412AA	1	2, 3, 6, 7			EXM	DGZ		VISCOUS FAN
	68012413AA	1	2, 3, 6, 7			EG2	DGZ		VISCOUS FAN
2	05126141AA	1	2, 3, 6, 7			EG2, EXM	DGZ		SCREW, Fan To Water Pump

SPRINTER (VB)

SERIES	LINE	BODY	ENGINE	TRANSMISSION
L = LOWLINE	3 = HD DODGE 2WD 6 = Lt. Duty DODGE 4WD 2 = Med. Duty DODGE 2WD 7 = Med. Duty DODGE 4WD	17 = VAN WHEEL BASE 7 55 = WAGON WHEEL BASE 5 15 = VAN WHEEL BASE 5 53 = 119 WB 13 = 119 WB 05 = CAB CHASSIS WHEEL BASE 5 03 = CAB CHASSIS WHEEL BASE 3	EG2 = 3.5L V6 Gas Engine EXM = 3.0L V6 Turbo Diesel Engine	DGZ = 5-Speed Auto W5A380 Transmission

Air Charge Cooler
Figure 7-175

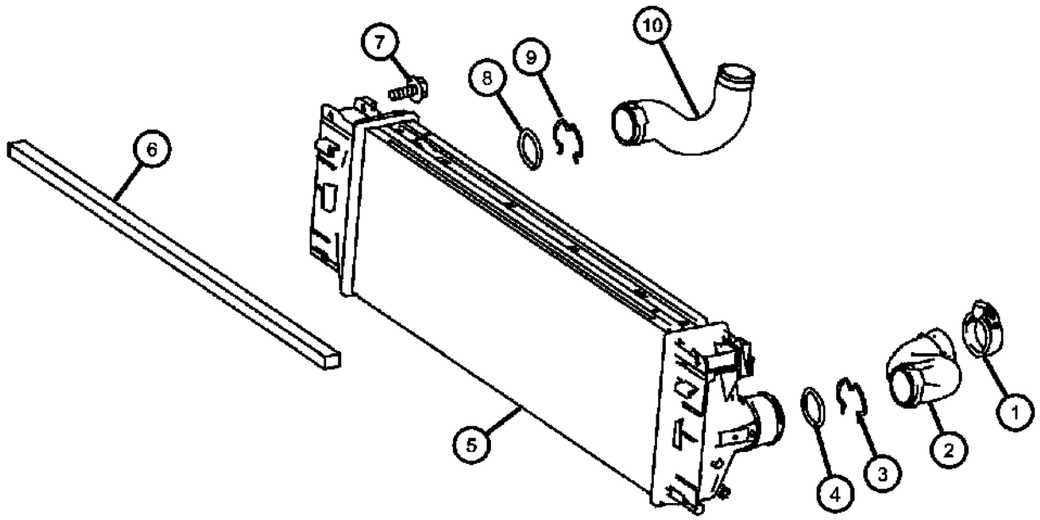

ITEM	PART NUMBER	QTY	LINE	SERIES	BODY	ENGINE	TRANS	TRIM	DESCRIPTION
1	06104788AA	1	2, 3, 6, 7			EXM	DGZ		CLAMP, Hose
2	68013655AA	1	2, 3, 6, 7			EXM	DGZ		HOSE, Charge Air CoolerRight
3	68013654AA	1	2, 3, 6, 7			EXM	DGZ		SPRING
4									SEAL, CHARGE AIR COOLER
	68013653AA	1	3, 7			EXM	DGZ		
		1	2, 3, 6, 7			EXM	DGZ		
5	68013636AA	1	2, 3, 6, 7			EXM	DGZ		INTERCOOLER
6									COVER, Radiator
	68004897AA	1	3, 7			EXM	DGZ		
		1	2, 3, 6, 7			EXM	DGZ		
7	06104014AA	2	2, 3, 6, 7			EG2, EXM	DGZ		BOLT, Torx, M6X1.00X60.00
8									SEAL, CHARGE AIR COOLER
	68013653AA	1	3, 7			EXM	DGZ		
		1	2, 3, 6, 7			EXM	DGZ		
9	68013654AA	1	2, 3, 6, 7			EXM	DGZ		SPRING
10	68013652AA	1	2, 3, 6, 7			EXM	DGZ		HOSE, Turbo to Charge Air Cooler, Bottom

SPRINTER (VB)

SERIES	LINE	BODY	ENGINE	TRANSMISSION
L = LOWLINE	3 = HD DODGE 2WD 6 = Lt. Duty DODGE 4WD 2 = Med. Duty DODGE 2WD 7 = Med. Duty DODGE 4WD	17 = VAN WHEEL BASE 7 55 = WAGON WHEEL BASE 5 15 = VAN WHEEL BASE 5 53 = 119 WB 13 = 119 WB 05 = CAB CHASSIS WHEEL BASE 5 03 = CAB CHASSIS WHEEL BASE 3	EG2 = 3.5L V6 Gas Engine EXM = 3.0L V6 Turbo Diesel Engine	DGZ = 5-Speed Auto W5A380 Transmission

Water Pump and Related Parts
Figure 7-205

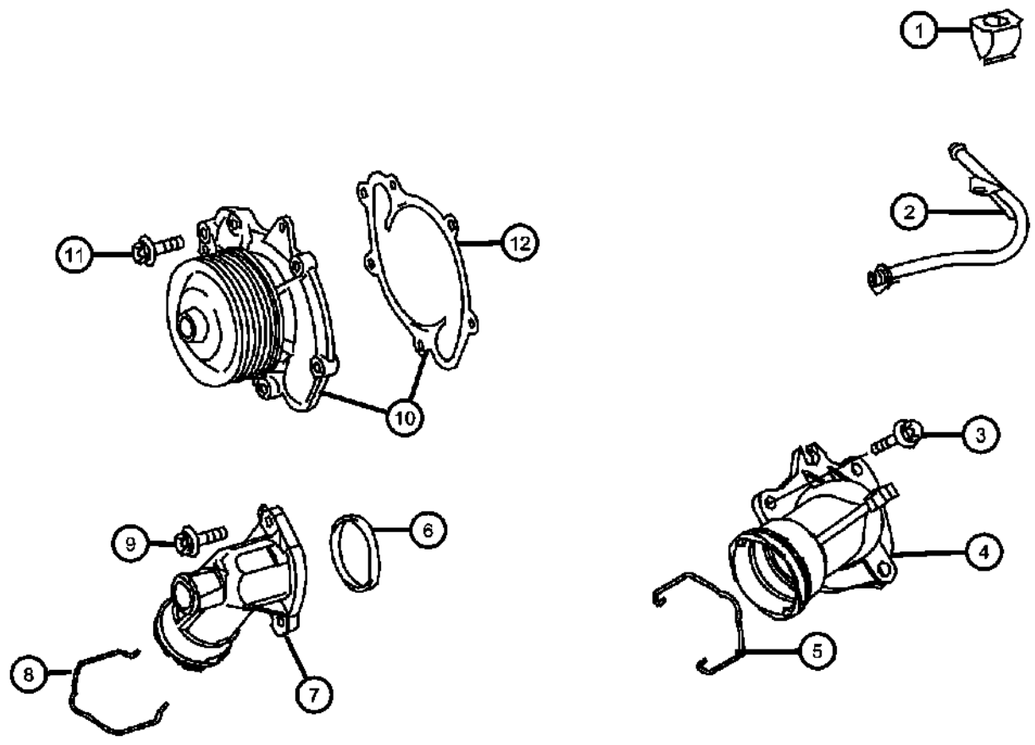

ITEM	PART NUMBER	QTY	LINE	SERIES	BODY	ENGINE	TRANS	TRIM	DESCRIPTION
1	68014052AA	1	2, 3, 6, 7			EXM	DGZ		RETAINER
2	68014047AA	1	2, 3, 6, 7			EXM	DGZ		HOSE
3	06104004AA	1	2, 3, 6, 7			EXM	DGZ		BOLT, Thermostat to Fitting M6x12
4	68014045AA	1	2, 3, 6, 7			EXM	DGZ		THERMOSTAT, Heated
5									CLIP, CLIP-SPRING
	05175821AA	1	3, 7			EG2, EXM	DGZ		26,84
		1	2, 3, 6, 7			EXM	DGZ		26,84
		1	3, 7			EXM	DGZ		26,84
6	05175584AA	1	2, 3, 6, 7			EXM	DGZ		GASKET, Thermostat, Pipe Socket to Cylinder Crankcase
7	68014141AA	1	2, 3, 6, 7			EXM	DGZ		FITTING, Coolant
8									CLIP, CLIP-SPRING
	05175821AA	1	3, 7			EG2, EXM	DGZ		26,84
		1	2, 3, 6, 7			EXM	DGZ		26,84
		1	3, 7			EXM	DGZ		26,84
9	06104006AA	2	2, 3, 6, 7			EXM	DGZ		BOLT, Torx Socket Head, M6X1.00X20.00
10	05175580AA	1	2, 3, 6, 7			EXM	DGZ		PUMP, Water, Parts Kit
11	05175582AA	6	2, 3, 6, 7			EXM	DGZ		BOLT, Torx
12	05175581AA	1	2, 3, 6, 7			EXM	DGZ		GASKET, Water Pump

SPRINTER (VB)

SERIES	LINE	BODY	ENGINE	TRANSMISSION
L = LOWLINE	3 = HD DODGE 2WD 6 = Lt. Duty DODGE 4WD 2 = Med. Duty DODGE 2WD 7 = Med. Duty DODGE 4WD	17 = VAN WHEEL BASE 7 55 = WAGON WHEEL BASE 5 15 = VAN WHEEL BASE 5 53 = 119 WB 13 = 119 WB 05 = CAB CHASSIS WHEEL BASE 5 03 = CAB CHASSIS WHEEL BASE 3	EG2 = 3.5L V6 Gas Engine EXM = 3.0L V6 Turbo Diesel Engine	DGZ = 5-Speed Auto W5A380 Transmission

Water Pump and Related Parts
Figure 7-210

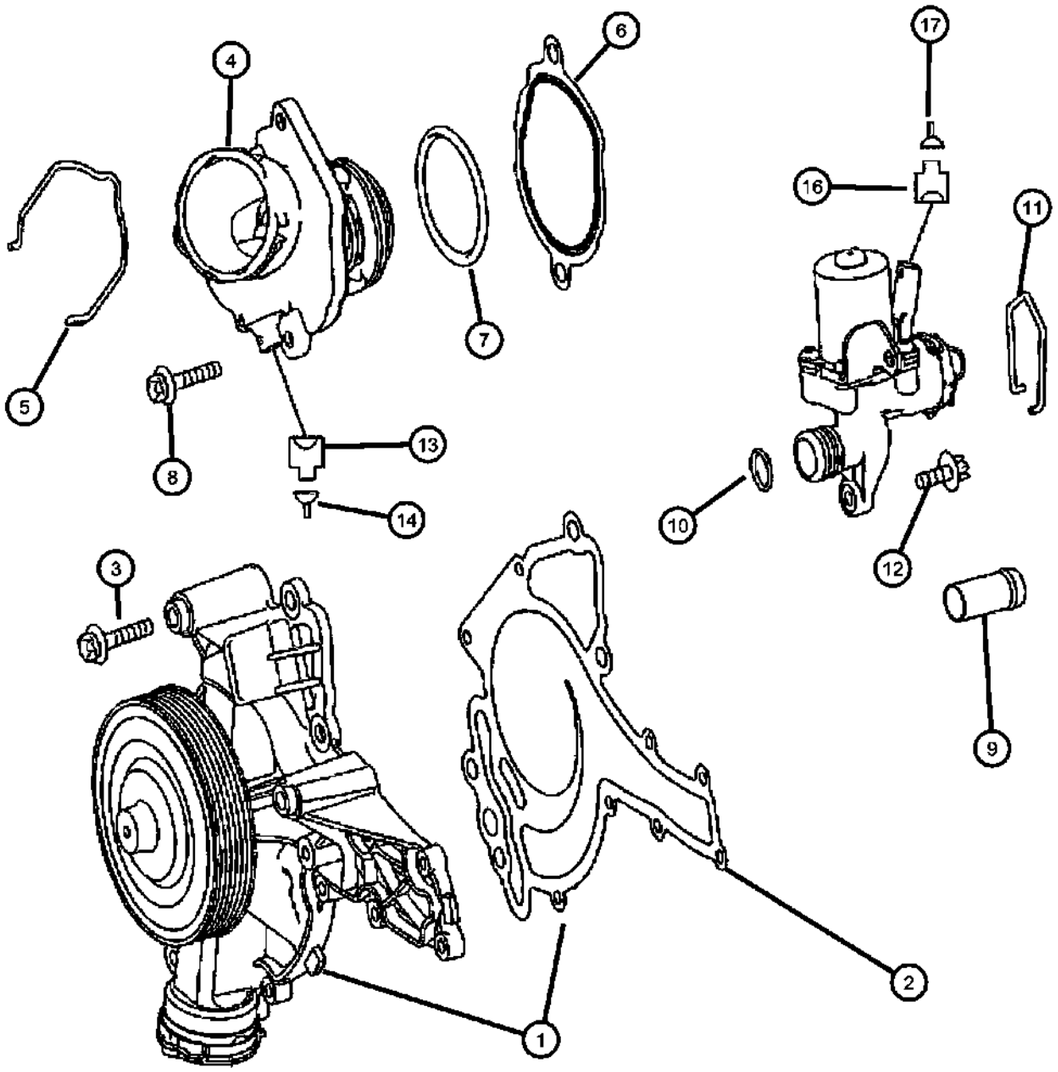

ITEM	PART NUMBER	QTY	LINE	SERIES	BODY	ENGINE	TRANS	TRIM	DESCRIPTION
1	68013932AA	1	2, 3, 6, 7			EG2	DGZ		PUMP, Water, Includes Gasket
2	68013945AA	1	2, 3, 6, 7			EG2	DGZ		GASKET, Water Pump, Also Included With Water Pump
3									SCREW
	05073898AA	8	2, 3, 6, 7			EG2	DGZ		Water Pump To Timing Case
	68013947AA	3	2, 3, 6, 7			EG2	DGZ		[M8x75] Water Pump To Timing Case
4	68013949AA	1	2, 3, 6, 7			EG2	DGZ		THERMOSTAT
5	68013641AA	1	2, 3, 6, 7			EG2	DGZ		SPRING
6	68013950AA	1	2, 3, 6, 7			EG2	DGZ		GASKET, Water Pump
7	68013951AA	1	2, 3, 6, 7			EG2	DGZ		O-RING
8	05073898AA	2	2, 3, 6, 7			EG2	DGZ		SCREW
9	68013953AA	1	2, 3, 6, 7			EG2	DGZ		FITTING
10	68013954AA	2	2, 3, 6, 7			EG2	DGZ		O RING
11	68013955AA	1	2, 3, 6, 7			EG2	DGZ		SPRING
12	06104142AA	2	2, 3, 6, 7			EG2	DGZ		SCREW, Pan Head, M6x1.00x16.00
13	68011798AA	1	2, 3, 6, 7			EG2	DGZ		CONNECTOR, [Y110] Connector
14	68011877AA	AR	2, 3, 6, 7			EG2	DGZ		TERMINAL, Thermostat
-15	68011050AA	AR	2, 3, 6, 7			EG2	DGZ		GASKET, Thermostat Connector
16	68011798AA	1	2, 3, 6, 7			EG2	DGZ		CONNECTOR, [Y12/2] Connector
17	68011877AA	AR	2, 3, 6, 7			EG2	DGZ		TERMINAL, Therminal
-18	68011050AA	AR	2, 3, 6, 7			EG2	DGZ		GASKET

SPRINTER (VB)

SERIES	LINE	BODY	ENGINE	TRANSMISSION
L = LOWLINE	3 = HD DODGE 2WD 6 = Lt. Duty DODGE 4WD 2 = Med. Duty DODGE 2WD 7 = Med. Duty DODGE 4WD	17 = VAN WHEEL BASE 7 55 = WAGON WHEEL BASE 5 15 = VAN WHEEL BASE 5 53 = 119 WB 13 = 119 WB 05 = CAB CHASSIS WHEEL BASE 5 03 = CAB CHASSIS WHEEL BASE 3	EG2 = 3.5L V6 Gas Engine EXM = 3.0L V6 Turbo Diesel Engine	DGZ = 5-Speed Auto W5A380 Transmission

AR = use ase required - = Non illustrrated part

<< RETURN TO GROUP INDEX

Coolant Recovery Bottle
Figure 7-305

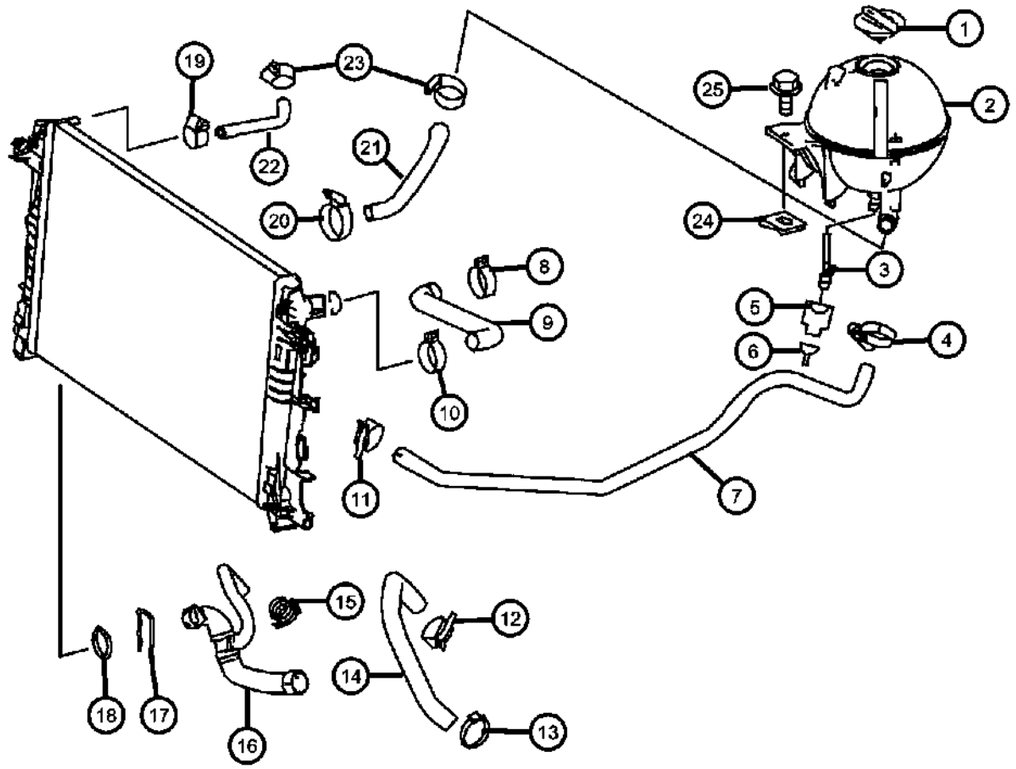

ITEM	PART NUMBER	QTY	LINE	SERIES	BODY	ENGINE	TRANS	TRIM	DESCRIPTION
1	68004911AA	1	2, 3, 6, 7			EG2, EXM	DGZ		CAP, Coolant Recovery Bottle
2	68004910AA	1	2, 3, 6, 7			EXM	DGZ		BOTTLE, Coolant Recovery
3	68013657AA	1	2, 3, 6, 7			EG2, EXM	DGZ		SENSOR, Coolant Level
4	68013657AA	1							CLAMP, (NOT SERVICED)
5	05120273AA	1	2, 3, 6, 7			EG2, EXM	DGZ		HOUSING, Coolant Level 2-Pin,S41
6	05103874AA	1	2, 3, 6, 7			EXM, EG2	DGZ		TERMINAL, 0.75MM2,MQA,S41
7	68013651AA	1	2, 3, 6, 7			EXM	DGZ		HOSE, Engine Breathing
8	06105105AA	1	2, 3, 6, 7			EXM	DGZ		CLAMP, HOSE CLAMP, Hose to Thermostat
9	68013638AA	1	2, 3, 6, 7			EXM	DGZ		HOSE, RadiatorUpper
10	68013642AA	1	2, 3, 6, 7			EG2, EXM	DGZ		CLAMP, Hose to Radiator
11									CLAMP
	05133496AA	1	3, 7			EXM	DGZ		Fluid Reservoir Breather Hose 14-24/8.3MM
		1	2, 3, 6, 7			EXM	DGZ		Fluid Reservoir Breather Hose 14-24/8.3MM
12									CLAMP, HOSE CLAMP
	06104813AA	1	2, 3, 6, 7			EG2, EXM	DGZ		Heating By Cooling Water 32/12MM
		1	3, 7			EG2, EXM	DGZ		Heating By Cooling Water 32/12MM
13	06105105AA	1	2, 3, 6, 7			EXM	DGZ		CLAMP, HOSE CLAMP, Cooling Water Hose to Water Pump
14	68025114AA	1	2, 3, 6, 7			EXM	DGZ		HOSE, Radiator
15	06104806AA	1	2, 3, 6, 7			EXM	DGZ		CLAMP, Heating Hose to Heating Pipe, Return 23-26MM
16	68025109AA	1	2, 3, 6, 7			EXM	DGZ		HOSE, Radiator
17	05175821AA	1	2, 3, 6, 7			EXM	DGZ		CLIP, CLIP-SPRING, 26,84
18	68013648AA	1	2, 3, 6, 7			EXM	DGZ		SEAL
19	68004905AA	1	2, 3, 6, 7			EG2, EXM	DGZ		CLAMP, Filling Hose to Radiator
20	05133496AA	1	2, 3, 6, 7			EXM	DGZ		CLAMP, Radiator De-Aeration Hose 14-24/8.3MM
21	68004902AA	1	2, 3, 6, 7			EG2, EXM	DGZ		HOSE, Coolant, Heating Hose to Radiator Breathing Hose
22									HOSE, Coolant
	68013650AA	1	3, 7			EG2, EXM	DGZ		Cooling-Water-Line Breathing
		1	2, 3, 6, 7			EG2, EXM	DGZ		Cooling-Water-Line Breathing

SPRINTER (VB)

SERIES	LINE	BODY	ENGINE	TRANSMISSION
L = LOWLINE	3 = HD DODGE 2WD 6 = Lt. Duty DODGE 4WD 2 = Med. Duty DODGE 2WD 7 = Med. Duty DODGE 4WD	17 = VAN WHEEL BASE 7 55 = WAGON WHEEL BASE 5 15 = VAN WHEEL BASE 5 53 = 119 WB 13 = 119 WB 05 = CAB CHASSIS WHEEL BASE 5 03 = CAB CHASSIS WHEEL BASE 3	EG2 = 3.5L V6 Gas Engine EXM = 3.0L V6 Turbo Diesel Engine	DGZ = 5-Speed Auto W5A380 Transmission

Coolant Recovery Bottle
Figure 7-305

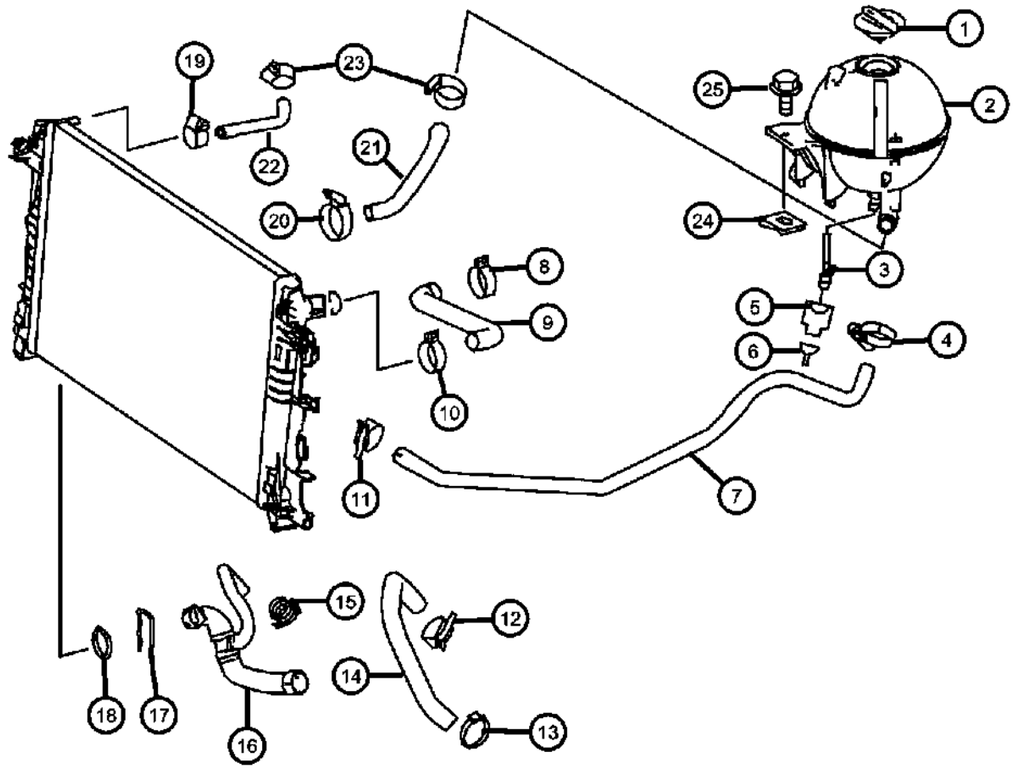

ITEM	PART NUMBER	QTY	LINE	SERIES	BODY	ENGINE	TRANS	TRIM	DESCRIPTION
23	06104813AA	1	2, 3, 6, 7			EG2, EXM	DGZ		CLAMP, HOSE CLAMP, Filling Hose to Expansion Tank 32/12MM
24									CLIP
	06104748AA	1	3, 7			EG2, EXM	DGZ		Reservoir to Support
		1	2, 3, 6, 7			EG2, EXM	DGZ		Reservoir to Support
25	05161856AB	1	2, 3, 6, 7			EG2, EXM	DGZ		SCREW

SPRINTER (VB)

SERIES	LINE	BODY	ENGINE	TRANSMISSION
L = LOWLINE	3 = HD DODGE 2WD 6 = Lt. Duty DODGE 4WD 2 = Med. Duty DODGE 2WD 7 = Med. Duty DODGE 4WD	17 = VAN WHEEL BASE 7 55 = WAGON WHEEL BASE 5 15 = VAN WHEEL BASE 5 53 = 119 WB 13 = 119 WB 05 = CAB CHASSIS WHEEL BASE 5 03 = CAB CHASSIS WHEEL BASE 3	EG2 = 3.5L V6 Gas Engine EXM = 3.0L V6 Turbo Diesel Engine	DGZ = 5-Speed Auto W5A380 Transmission

Coolant Recovery Bottle
Figure 7-310

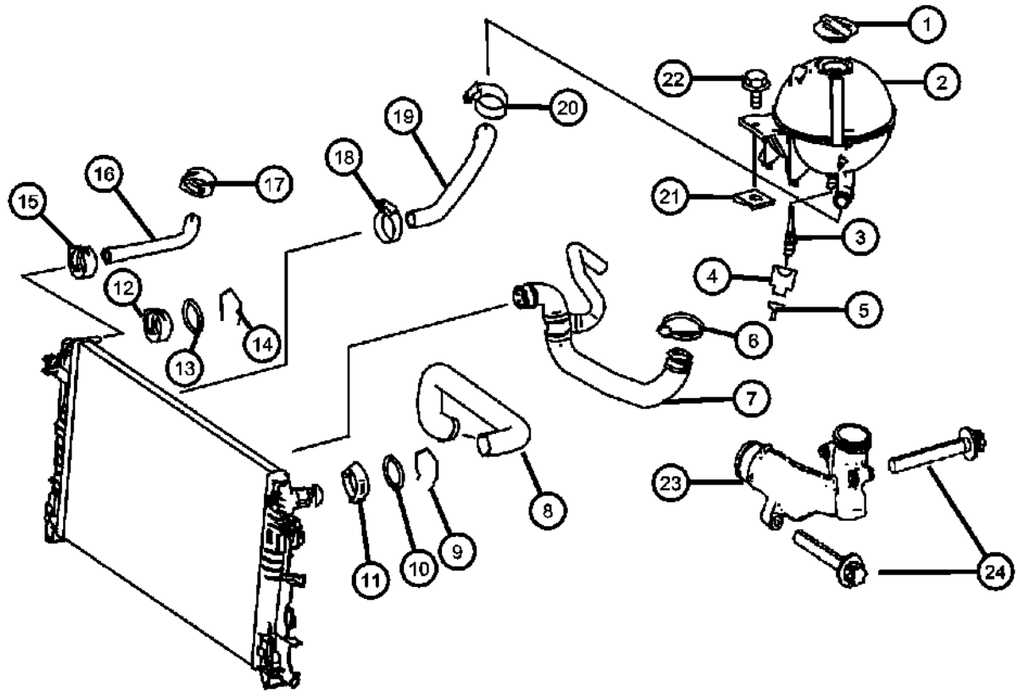

ITEM	PART NUMBER	QTY	LINE	SERIES	BODY	ENGINE	TRANS	TRIM	DESCRIPTION
1	68004911AA	1	2, 3, 6, 7			EG2, EXM	DGZ		CAP, Coolant Recovery Bottle
2	68013656AA	1	2, 3, 6, 7			EG2	DGZ		BOTTLE, Coolant Recovery
3	68013657AA	1	2, 3, 6, 7			EG2, EXM	DGZ		SENSOR, Coolant Level
4	05120273AA	1	2, 3, 6, 7			EG2, EXM	DGZ		HOUSING, Coolant Level 2-PIN,S41
5	05103874AA	1	2, 3, 6, 7			EG2, EXM	DGZ		TERMINAL
6	06105105AA	1	2, 6			EG2, EXM	DGZ		CLAMP, HOSE CLAMP, Cooling Water Hose to Water Pump
7	68013647AA	1	2, 3, 6, 7			EG2	DGZ		HOSE, RadiatorLower
8	68013639AA	1	2, 3, 6, 7			EG2	DGZ		HOSE, RadiatorUpper
9	68013641AA	1	2, 3, 6, 7			EG2	DGZ		SPRING, 27,43MM
10	68013640AA	1	2, 3, 6, 7			EG2	DGZ		SEAL, 36,3MM
11	68013642AA	1	2, 3, 6, 7			EG2, EXM	DGZ		CLAMP, Hose to Radiator
12	06104813AA	1	2, 3, 6, 7			EG2	DGZ		CLAMP, HOSE CLAMP, Heating By Cooling Water 32/12MM
13	68013648AA	1	2, 3, 6, 7			EG2	DGZ		SEAL
14									CLIP, CLIP-SPRING
	05175821AA	1	3, 7			EG2	DGZ		
		1	2, 6			EG2	DGZ		
15	68004905AA	1	2, 3, 6, 7			EG2, EXM	DGZ		CLAMP, Filling Hose to Radiator
16									HOSE, Coolant
	68013650AA	1	3, 7			EG2, EXM	DGZ		Cooling-Water-Line Breathing
		1	2, 3, 6, 7			EG2, EXM	DGZ		Cooling-Water-Line Breathing
17									CLAMP, HOSE CLAMP
	06104813AA	1	2, 3, 6, 7			EG2	DGZ		Filling Hose to Expansion Tank 32/12MM
		1	2, 6			EG2	DGZ		Filling Hose to Expansion Tank 32/12MM
18	05133494AA	1	2, 3, 6, 7			EG2	DGZ		CLAMP, Radiator De-Aeration Hose 14-24/8.3MM
19	68004902AA	1	2, 3, 6, 7			EG2, EXM	DGZ		HOSE, Coolant, Heating Hose to Radiator Breathing Hose
20	68004902AA	1							CLAMP, (NOT SERVICED)
21									CLIP
	06104748AA	1	3, 7			EG2, EXM	DGZ		Reservoir to Support
		1	2, 3, 6, 7			EG2, EXM	DGZ		Reservoir to Support

SPRINTER (VB)

SERIES	LINE	BODY	ENGINE	TRANSMISSION
L = LOWLINE	3 = HD DODGE 2WD 6 = Lt. Duty DODGE 4WD 2 = Med. Duty DODGE 2WD 7 = Med. Duty DODGE 4WD	17 = VAN WHEEL BASE 7 55 = WAGON WHEEL BASE 5 15 = VAN WHEEL BASE 5 53 = 119 WB 13 = 119 WB 05 = CAB CHASSIS WHEEL BASE 5 03 = CAB CHASSIS WHEEL BASE 3	EG2 = 3.5L V6 Gas Engine EXM = 3.0L V6 Turbo Diesel Engine	DGZ = 5-Speed Auto W5A380 Transmission

Coolant Recovery Bottle
Figure 7-310

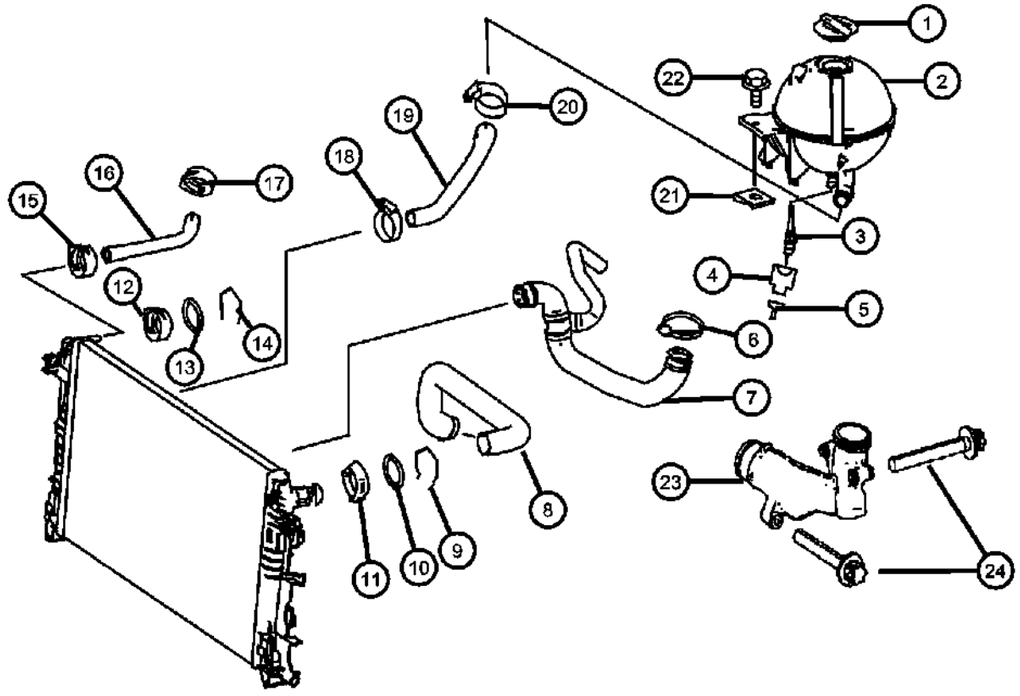

ITEM	PART NUMBER	QTY	LINE	SERIES	BODY	ENGINE	TRANS	TRIM	DESCRIPTION
22	05161856AB	2	2, 3, 6, 7			EG2, EXM	DGZ		SCREW
23	68012406AA	1	2, 3, 6, 7			EG2	DGZ		MANIFOLD, Water Elbow
24									SCREW
	06104687AA	2	3, 7			EG2	DGZ		[M6x43]
		2	2, 6			EG2	DGZ		[M6x43]

SPRINTER (VB)

SERIES	LINE	BODY	ENGINE	TRANSMISSION
L = LOWLINE	3 = HD DODGE 2WD 6 = Lt. Duty DODGE 4WD 2 = Med. Duty DODGE 2WD 7 = Med. Duty DODGE 4WD	17 = VAN WHEEL BASE 7 55 = WAGON WHEEL BASE 5 15 = VAN WHEEL BASE 5 53 = 119 WB 13 = 119 WB 05 = CAB CHASSIS WHEEL BASE 5 03 = CAB CHASSIS WHEEL BASE 3	EG2 = 3.5L V6 Gas Engine EXM = 3.0L V6 Turbo Diesel Engine	DGZ = 5-Speed Auto W5A380 Transmission

Pulleys and Related Parts Gas
Figure 7-405

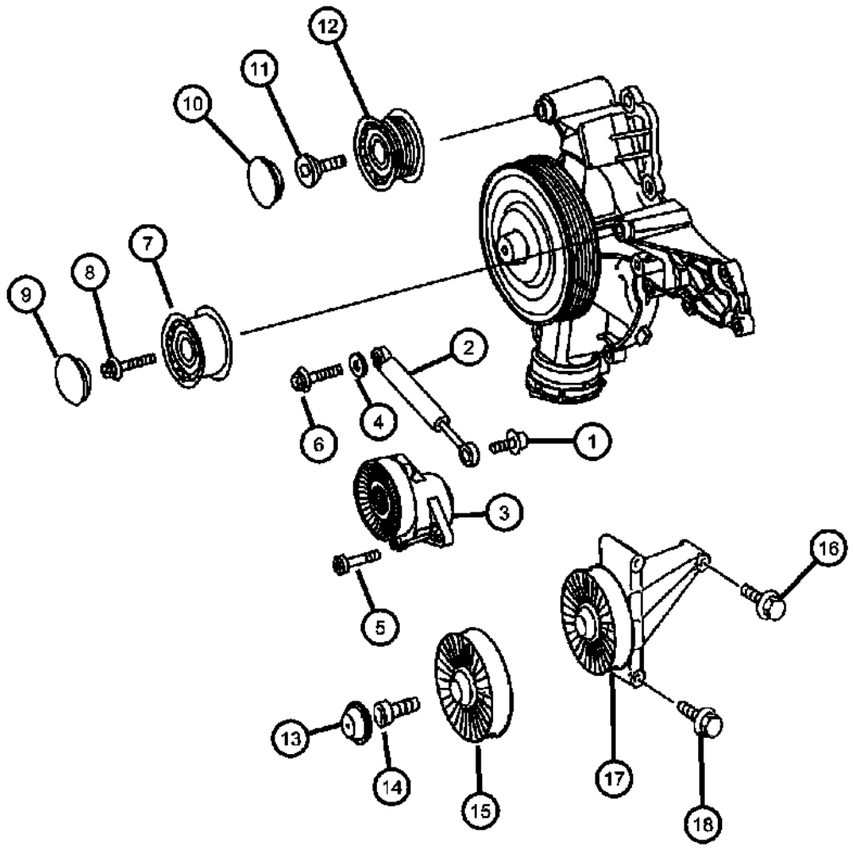

ITEM	PART NUMBER	QTY	LINE	SERIES	BODY	ENGINE	TRANS	TRIM	DESCRIPTION
1	05097832AA	1	2, 3, 6, 7			EG2	DGZ		BOLT, Torx
2	68020887AA	1	2, 3, 6, 7			EG2	DGZ		ABSORBER, Shock, To Belt Tensioner & Water Pump
3	04862624AA	1	2, 3, 6, 7			EG2	DGZ		TENSIONER, Belt
4									WASHER, Flat
	05098108AA	4	3, 7			EG2, EXM	DGZ		Shock Absorber on Water Pump
		4	2, 3, 6, 7			EG2, EXM	DGZ		Shock Absorber on Water Pump
5	05073680AA	1	2, 3, 6, 7			EG2	DGZ		SCREW, Belt Tightener to Timing Case
6	06104697AA	2	2, 3, 6, 7			EG2	DGZ		BOLT, Shock Absorber on Water Pump M8x34
7	68020889AA	1	2, 3, 6, 7			EG2	DGZ		PULLEY, Tensioner
8	04862626AA	1	2, 3, 6, 7			EG2	DGZ		SCREW, Sheave Pulley at Water Pump
9	05080250AA	1	2, 3, 6, 7			EG2	DGZ		CAP, CAP
10	05080250AA	1	2, 3, 6, 7			EG2	DGZ		CAP, CAP
11	05073717AA	1	2, 3, 6, 7			EG2	DGZ		SCREW
12	68023936AA	1	2, 3, 6, 7			EG2	DGZ		PULLEY, Tensioner
13	05125553AA	1	2, 3, 6, 7			EG2	DGZ		CAP, Screw Cover
14	05126143AA	1	2, 3, 6, 7			EG2	DGZ		SCREW, [M10x50 - 10.9]
15	05117690AA	1	2, 3, 6, 7			EG2	DGZ		PULLEY, Tensioner
16	06104035AA	3	2, 3, 6, 7			EG2	DGZ		BOLT, Hex Flange Head, M8X1.25X90.00
17	05117673AA	1	2, 3, 6, 7			EG2	DGZ		PULLEY, Tensioner
18	06104031AA	1	2, 3, 6, 7			EG2	DGZ		SCREW

SPRINTER (VB)

SERIES	LINE	BODY	ENGINE	TRANSMISSION
L = LOWLINE	3 = HD DODGE 2WD 6 = Lt. Duty DODGE 4WD 2 = Med. Duty DODGE 2WD 7 = Med. Duty DODGE 4WD	17 = VAN WHEEL BASE 7 55 = WAGON WHEEL BASE 5 15 = VAN WHEEL BASE 5 53 = 119 WB 13 = 119 WB 05 = CAB CHASSIS WHEEL BASE 5 03 = CAB CHASSIS WHEEL BASE 3	EG2 = 3.5L V6 Gas Engine EXM = 3.0L V6 Turbo Diesel Engine	DGZ = 5-Speed Auto W5A380 Transmission

Pulley and Related Parts Diesel
Figure 7-410

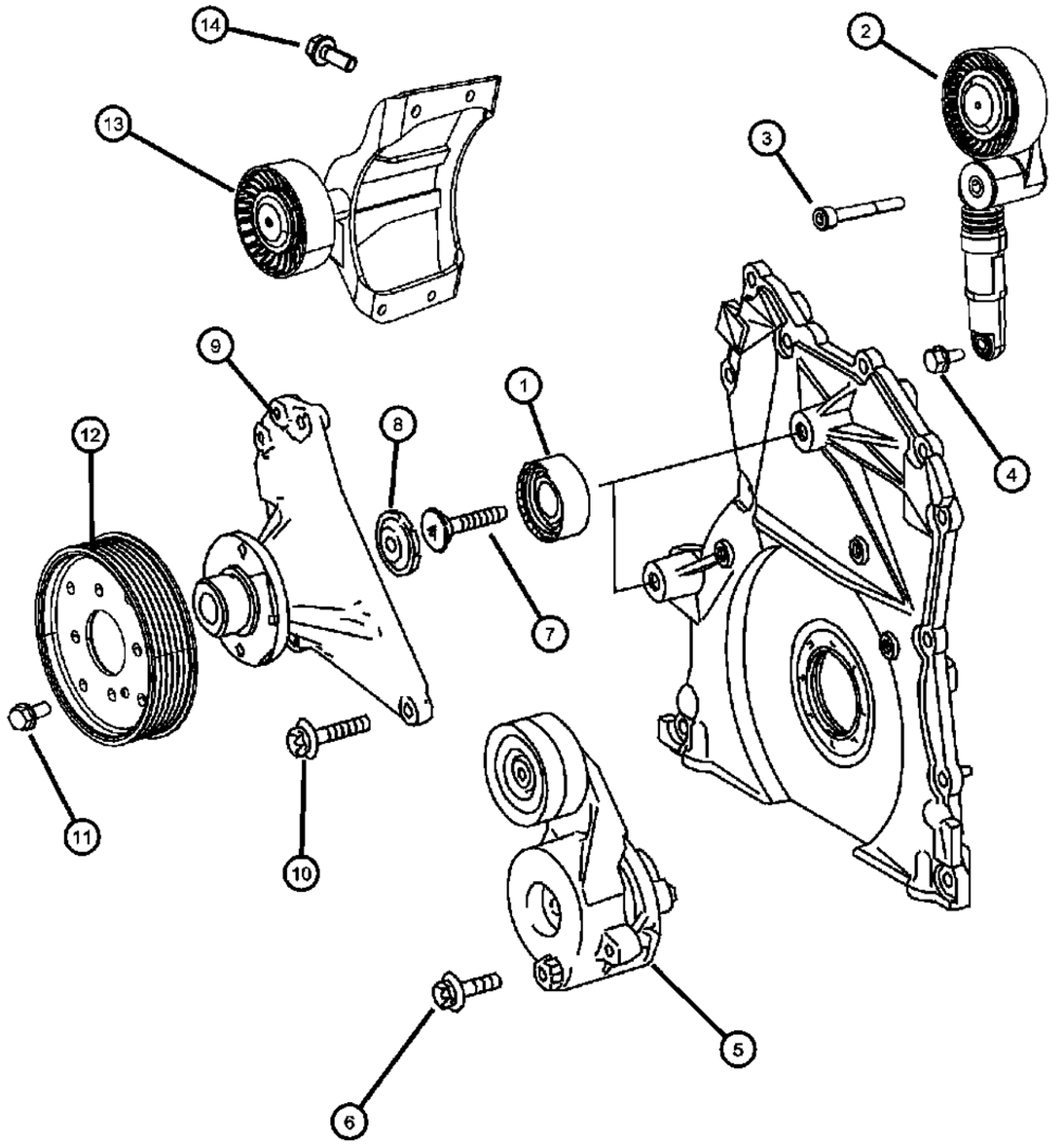

ITEM	PART NUMBER	QTY	LINE	SERIES	BODY	ENGINE	TRANS	TRIM	DESCRIPTION
1	05175589AB	2	2, 3, 6, 7			EXM	DGZ		PULLEY, Idler
2	68021256AA	1	2, 3, 6, 7			EXM	DGZ		PULLEY, Tensioner
3	68012417AA	1	2, 3, 6, 7			EXM	DGZ		SCREW
4	05126229AA	1	2, 3, 6, 7			EXM	DGZ		SCREW
5	05175588AA	1	2, 3, 6, 7			EXM	DGZ		TENSIONER, Belt
6	06104226AA	2	2, 3, 6, 7			EG2, EXM	DGZ		BOLT, Hex Flange Head, M10X1.50X90.00
7	05073902AA	2	2, 3, 6, 7			EXM	DGZ		BOLT
8	05080250AA	2	2, 3, 6, 7			EXM	DGZ		CAP, CAP
9	68014055AA	1	2, 3, 6, 7			EXM	DGZ		BRACKET
10	06104684AA	1	2, 3, 6, 7			EXM	DGZ		BOLT, [M6x28]
11	05183964AA	4	2, 3, 6, 7			EXM	DGZ		BOLT, Hex Flange Head, M6x1.00x10.90
12	68012421AA	1	2, 3, 6, 7			EXM	DGZ		PULLEY, Tensioner
13	68012463AA	1	2, 3, 6, 7			EXM	DGZ		PULLEY
14	68012459AA	4	2, 3, 6, 7			EXM	DGZ		BOLT

SPRINTER (VB)

SERIES	LINE	BODY	ENGINE	TRANSMISSION
L = LOWLINE	3 = HD DODGE 2WD 6 = Lt. Duty DODGE 4WD 2 = Med. Duty DODGE 2WD 7 = Med. Duty DODGE 4WD	17 = VAN WHEEL BASE 7 55 = WAGON WHEEL BASE 5 15 = VAN WHEEL BASE 5 53 = 119 WB 13 = 119 WB 05 = CAB CHASSIS WHEEL BASE 5 03 = CAB CHASSIS WHEEL BASE 3	EG2 = 3.5L V6 Gas Engine EXM = 3.0L V6 Turbo Diesel Engine	DGZ = 5-Speed Auto W5A380 Transmission

AR = use ase required - = Non illustrrated part

<< RETURN TO GROUP INDEX

Belts, Serpentine and V-Belts
Figure 7-505

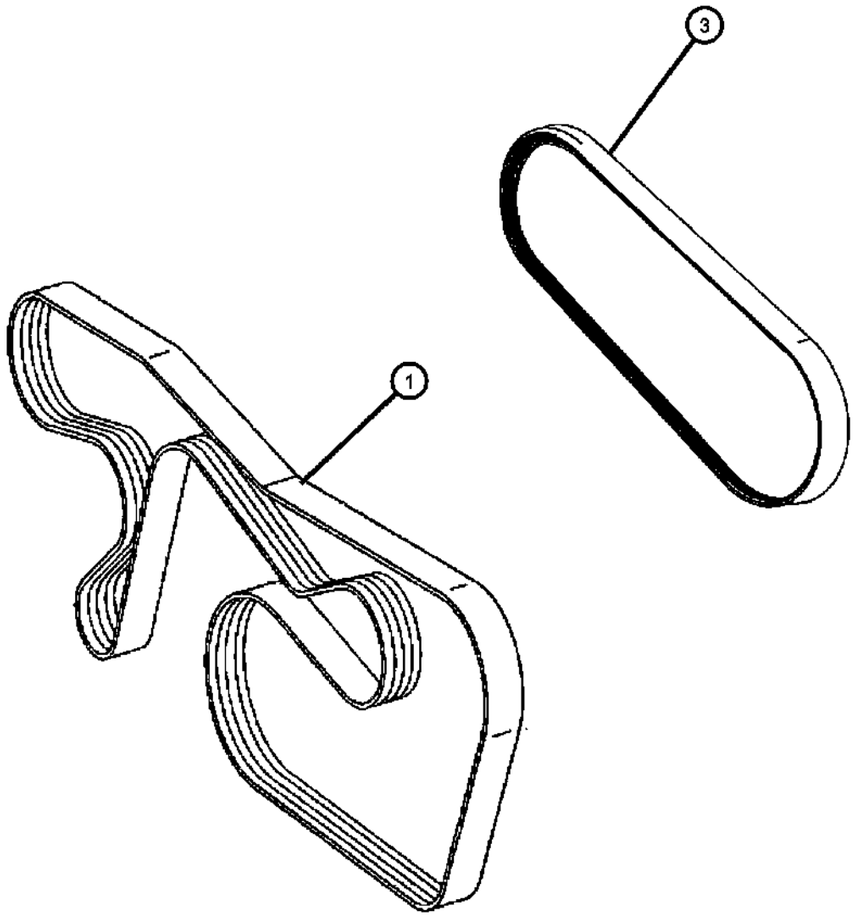

ITEM	PART NUMBER	QTY	LINE	SERIES	BODY	ENGINE	TRANS	TRIM	DESCRIPTION
1									BELT, Accessory Drive
	68012426AA	1	2, 3, 6, 7			EXM	DGZ		With [HBD]
	68012429AA	1	2, 3, 6, 7			EG2	DGZ		With [HAB]
	68012436AA	1	2, 6			EG2	DGZ		With [HBD]
-2	04891587AA	1	2, 3, 6, 7			EXM	DGZ		BELT, Serpentine, With [HAB]
3	68012438AA	1	2, 3, 6, 7			EXM	DGZ		BELT, Accessory Drive, Dummy Belt

SPRINTER (VB)

SERIES	LINE	BODY	ENGINE	TRANSMISSION
L = LOWLINE	3 = HD DODGE 2WD 6 = Lt. Duty DODGE 4WD 2 = Med. Duty DODGE 2WD 7 = Med. Duty DODGE 4WD	17 = VAN WHEEL BASE 7 55 = WAGON WHEEL BASE 5 15 = VAN WHEEL BASE 5 53 = 119 WB 13 = 119 WB 05 = CAB CHASSIS WHEEL BASE 5 03 = CAB CHASSIS WHEEL BASE 3	EG2 = 3.5L V6 Gas Engine EXM = 3.0L V6 Turbo Diesel Engine	DGZ = 5-Speed Auto W5A380 Transmission

Transmission Oil Cooler and Lines
Figure 7-605

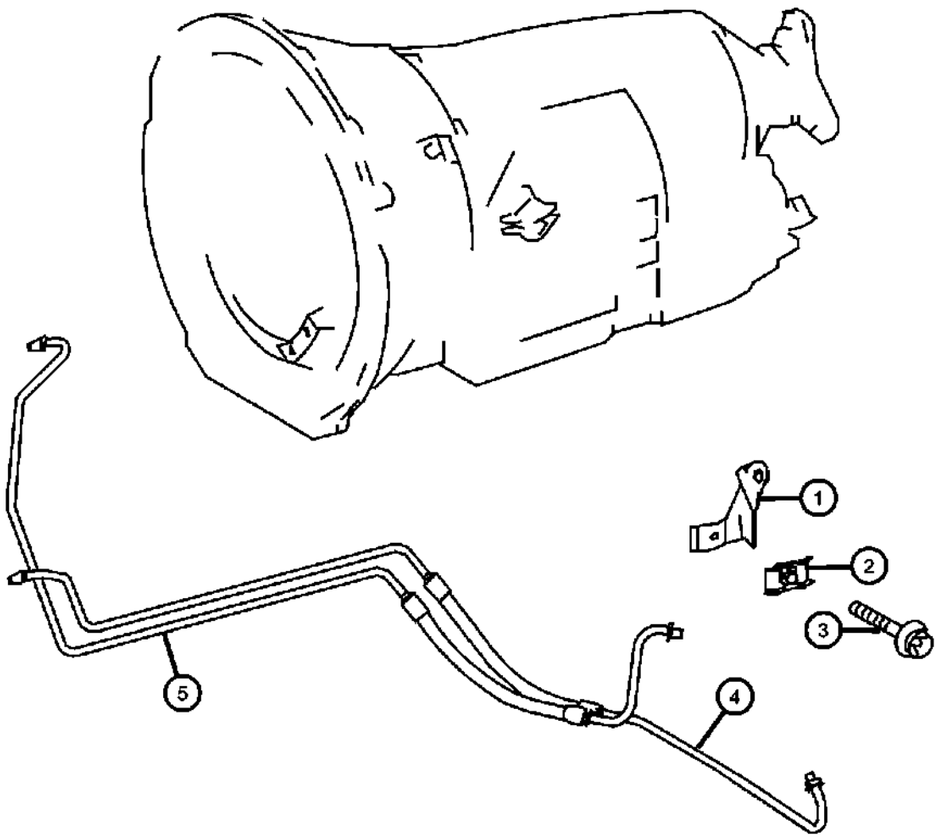

ITEM	PART NUMBER	QTY	LINE	SERIES	BODY	ENGINE	TRANS	TRIM	DESCRIPTION
1	68004975AA	1	2, 3, 6, 7			EG2, EXM	DGZ		BRACKET
2	05137249AA	1	2, 3, 6, 7			EG2, EXM	DGZ		CLAMP, Lines to Bracket
3									SCREW
	06104681AA	1	2, 3, 6, 7			EG2	DGZ		M6x15
		1	2, 3, 6, 7			EXM	DGZ		M6x15
4	68006215AA	1	2, 3, 6, 7			EG2, EXM	DGZ		TUBE AND HOSE, Oil Cooler, Feed
5	68006237AA	1	2, 3, 6, 7			EG2, EXM	DGZ		TUBE AND HOSE, Oil CoolerReturn

SPRINTER (VB)

SERIES	LINE	BODY	ENGINE	TRANSMISSION
L = LOWLINE	3 = HD DODGE 2WD 6 = Lt. Duty DODGE 4WD 2 = Med. Duty DODGE 2WD 7 = Med. Duty DODGE 4WD	17 = VAN WHEEL BASE 7 55 = WAGON WHEEL BASE 5 15 = VAN WHEEL BASE 5 53 = 119 WB 13 = 119 WB 05 = CAB CHASSIS WHEEL BASE 5 03 = CAB CHASSIS WHEEL BASE 3	EG2 = 3.5L V6 Gas Engine EXM = 3.0L V6 Turbo Diesel Engine	DGZ = 5-Speed Auto W5A380 Transmission

AR = use ase required - = Non illustrrated part

<< RETURN TO GROUP INDEX

Group - 8

Electrical

008-100 Starters	**008-1000** Battery, Battery Tray and Cables	**008-1100** Lamps-Interior and Exterior	**008-1300** Wiring-Headlamp to Dash
008-1400 Wiring-Instrument Panel	**008-1500** Wiring-Body and Accessories	**008-1600** Wiring and Repair	**008-1900** Ignition - Spark Plugs, Cables, Coils, and Glow Plugs

008-200 Generators / Alternators	**008-2000** Instrument Panel	**008-2100** Instrument Panel Cluster	**008-2200** Radio, Antenna, Speakers, DVD, and Video systems
008-2500 Telecommunication	**008-2600** Park Assist	**008-400** Modules and Engine Controllers	**008-500** Power Distribution Center, Fuse Block, Junction Block, Relays and Fuses
008-600 Sensors	**008-800** Switches	**008-900** Horns	

Group - 8 Electrical

Illustration Title — Group-Fig. No.

Starters
Starter and Related Parts ..... Fig. 8 - 105

Generators / Alternators
Generator/Alternator and Related Parts ..... Fig. 8 - 205

Modules and Engine Controllers
Modules Engine Compartment ..... Fig. 8 - 405
Modules Engine Compartment ..... Fig. 8 - 406
Modules Body ..... Fig. 8 - 407
Modules Body ..... Fig. 8 - 408
Modules Body ..... Fig. 8 - 409
Modules Body ..... Fig. 8 - 410
Modules Body ..... Fig. 8 - 420
Modules Body ..... Fig. 8 - 425

Power Distribution Center, Fuse Block, Junction Block, Relays and Fuses
Fuse Block Fuses and Relays ..... Fig. 8 - 510

Sensors
Sensors, Gas Engine ..... Fig. 8 - 605
Sensors Diesel Engine ..... Fig. 8 - 610
Sensors Brakes ..... Fig. 8 - 625
Sensor Body ..... Fig. 8 - 635
Sensors Temperature ..... Fig. 8 - 645

Switches
Switches Instrument Panel ..... Fig. 8 - 805
Switches Instrument Panel ..... Fig. 8 - 806
Switches Doors, Decklid, and Liftgate ..... Fig. 8 - 815
Switches Steering Column and Wheel ..... Fig. 8 - 830

Horns
Horns ..... Fig. 8 - 905
Audible Reverse Signal Horn ..... Fig. 8 - 906
Siren Alarm System ..... Fig. 8 - 910

Battery, Battery Tray and Cables
Battery Tray and Support ..... Fig. 8 - 1005
Auxilary Battery Tray, Battery Cable & Contactor ..... Fig. 8 - 1010

Lamps-Interior and Exterior
Lamps Front ..... Fig. 8 - 1105
Lamps Rear ..... Fig. 8 - 1109
Lamps Rear ..... Fig. 8 - 1111
Lamps, Interior ..... Fig. 8 - 1115
Clearance Roof Lamps ..... Fig. 8 - 1120

Wiring-Headlamp to Dash
Headlamp To Dash / Body Harness ..... Fig. 8 - 1302

Wiring-Instrument Panel
Wiring Instrument Panel ..... Fig. 8 - 1405
Wiring Instrument Panel ..... Fig. 8 - 1410

Wiring-Body and Accessories
Wiring Body ..... Fig. 8 - 1505
Wiring Body ..... Fig. 8 - 1506
Wiring Body ..... Fig. 8 - 1507
Wiring Body ..... Fig. 8 - 1508
Wiring Door, Deck Lid, and Liftgate ..... Fig. 8 - 1515
Wiring Door, Deck Lid, and Liftgate ..... Fig. 8 - 1516
Wiring Body ..... Fig. 8 - 1517
Wiring Body ..... Fig. 8 - 1518

Wiring and Repair
Wiring Harness Tie Straps & Related Parts ..... Fig. 8 - 1610

Ignition - Spark Plugs, Cables, Coils, and Glow Plugs
Ignition System ..... Fig. 8 - 1905

Instrument Panel
Instrument Panel And Structure ..... Fig. 8 - 2005
Instrument Panel ..... Fig. 8 - 2006
Instrument Panel ..... Fig. 8 - 2007
Instrument Panel ..... Fig. 8 - 2010

Instrument Panel Cluster
Instrument Panel Cluster ..... Fig. 8 - 2105

Radio, Antenna, Speakers, DVD, and Video systems
Radio ..... Fig. 8 - 2205
Antenna ..... Fig. 8 - 2210
Speakers ..... Fig. 8 - 2220

Telecommunication
Carphone / Telecommunication ..... Fig. 8 - 2505

Park Assist
Park Assist ..... Fig. 8 - 2605
Park Assist ..... Fig. 8 - 2610

Starter and Related Parts
Figure 8-105

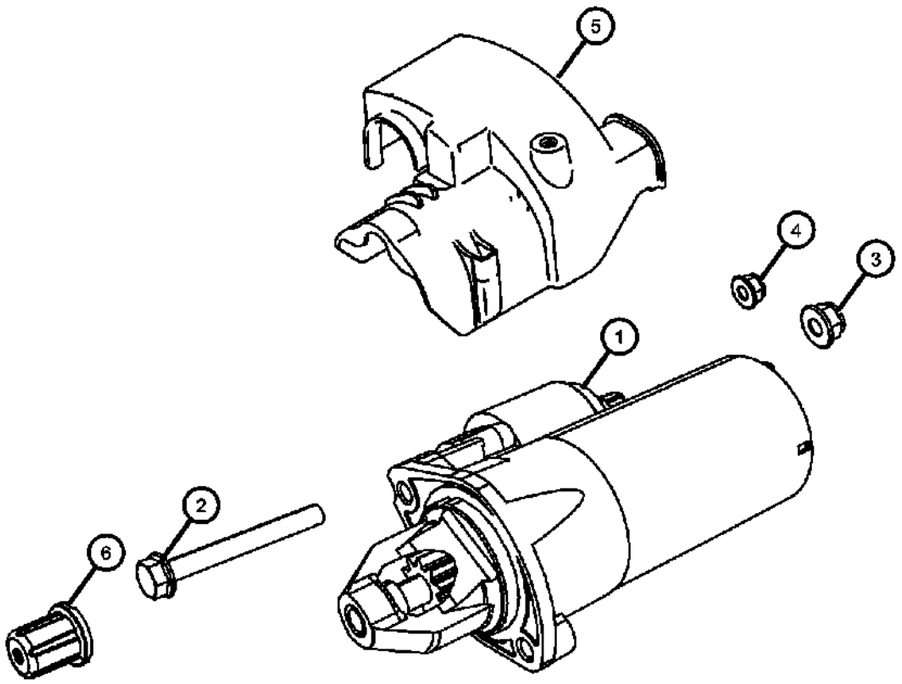

ITEM	PART NUMBER	QTY	LINE	SERIES	BODY	ENGINE	TRANS	TRIM	DESCRIPTION
Note:									
Sales Codes:									
1									STARTER, Engine
	68011829AB	1	2, 3, 6, 7	L		EG2	DGZ		[Bosch] Brand
	68012448AB	1	2, 3, 6, 7	L		EXM	DGZ		[Bosch] Brand
2	06104226AA	2	2, 3, 6, 7	L		EG2, EXM	DGZ		BOLT, Hex Flange Head, M10X1.50X90.00, Starter To Engine Block
3	05097674AA	1	2, 3, 6, 7	L	13, 15, 17, 53, 55	EG2, EXM	DGZ		NUT, Hex, Wiring Harness To Starter / Circuit [50] [M6]
4									NUT, Hex Flange, M8x1.25
	06104709AA	2	3, 7	L	03, 05	EG2, EXM	DGZ		Wiring Harness To Starter / Circuit [30] [M8]
		2	2, 3, 6, 7	L	13, 15, 17, 53, 55	EG2, EXM	DGZ		Wiring Harness To Starter / Circuit [30] [M8]
5	68012494AA	1	2, 3, 6, 7	L		EXM	DGZ		COVER, Starter, Wiring Harness To Starter / [Circuit [30/50]
6									CAP, Protective
	05099209AB	1	3, 7	L	03, 05	EG2, EXM	DGZ		Wiring Harness To Starter / Circuit [30]
		1	2, 6	L	13, 15, 17, 53, 55	EG2, EXM	DGZ		Wiring Harness To Starter / Circuit [30]

SPRINTER (VB)

SERIES	LINE	BODY	ENGINE	TRANSMISSION
L = LOWLINE	3 = HD DODGE 2WD 6 = Lt. Duty DODGE 4WD 2 = Med. Duty DODGE 2WD 7 = Med. Duty DODGE 4WD	17 = VAN WHEEL BASE 7 55 = WAGON WHEEL BASE 5 15 = VAN WHEEL BASE 5 53 = 119 WB 13 = 119 WB 05 = CAB CHASSIS WHEEL BASE 5 03 = CAB CHASSIS WHEEL BASE 3	EG2 = 3.5L V6 Gas Engine EXM = 3.0L V6 Turbo Diesel Engine	DGZ = 5-Speed Auto W5A380 Transmission

Generator/Alternator and Related Parts
Figure 8-205

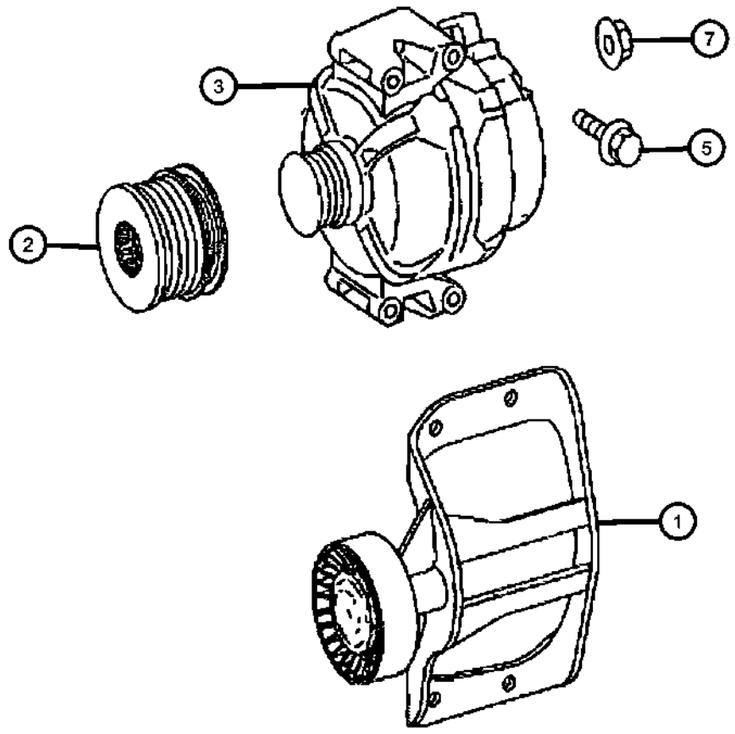

ITEM	PART NUMBER	QTY	LINE	SERIES	BODY	ENGINE	TRANS	TRIM	DESCRIPTION
1	68012463AA	1	2, 3, 6, 7	L		EXM	DGZ		PULLEY
2	05175811AA	1	2, 3, 6, 7	L		EXM			PULLEY, Alternator
3									ALTERNATOR
	68011841AB	1	2, 3, 6, 7	L		EG2	DGZ		Bosch 14V/180A;14V/180A / With [BAD]
	68011843AA	1	2, 3, 6, 7	L		EG2	DGZ		Bosch 14V/220A With [BAJ]
	68022877AB	1	2, 3, 6, 7	L		EXM	DGZ		With [BAJ Or HBD]
-4	04801250AC	1	2, 3, 6, 7	L		EXM	DGZ		ALTERNATOR, Engine, Valeo 14V/180A;14V/180A
5	06104035AA	4	2, 3, 6, 7	L		EG2	DGZ		BOLT, Hex Flange Head, M8X1.25X90.00
-6	68012459AA	4	2, 3, 6, 7	L		EXM	DGZ		BOLT
7									NUT, Hex Flange, M8x1.25
	06104709AA	1	2, 3, 6, 7	L	13, 15, 17, 53, 55	EXM, EG2	DGZ		
		1	3, 7	L	03, 05	EG2, EXM	DGZ		

SPRINTER (VB)

SERIES	LINE	BODY	ENGINE	TRANSMISSION
L = LOWLINE	3 = HD DODGE 2WD 6 = Lt. Duty DODGE 4WD 2 = Med. Duty DODGE 2WD 7 = Med. Duty DODGE 4WD	17 = VAN WHEEL BASE 7 55 = WAGON WHEEL BASE 5 15 = VAN WHEEL BASE 5 53 = 119 WB 13 = 119 WB 05 = CAB CHASSIS WHEEL BASE 5 03 = CAB CHASSIS WHEEL BASE 3	EG2 = 3.5L V6 Gas Engine EXM = 3.0L V6 Turbo Diesel Engine	DGZ = 5-Speed Auto W5A380 Transmission

Modules Engine Compartment
Figure 8-405

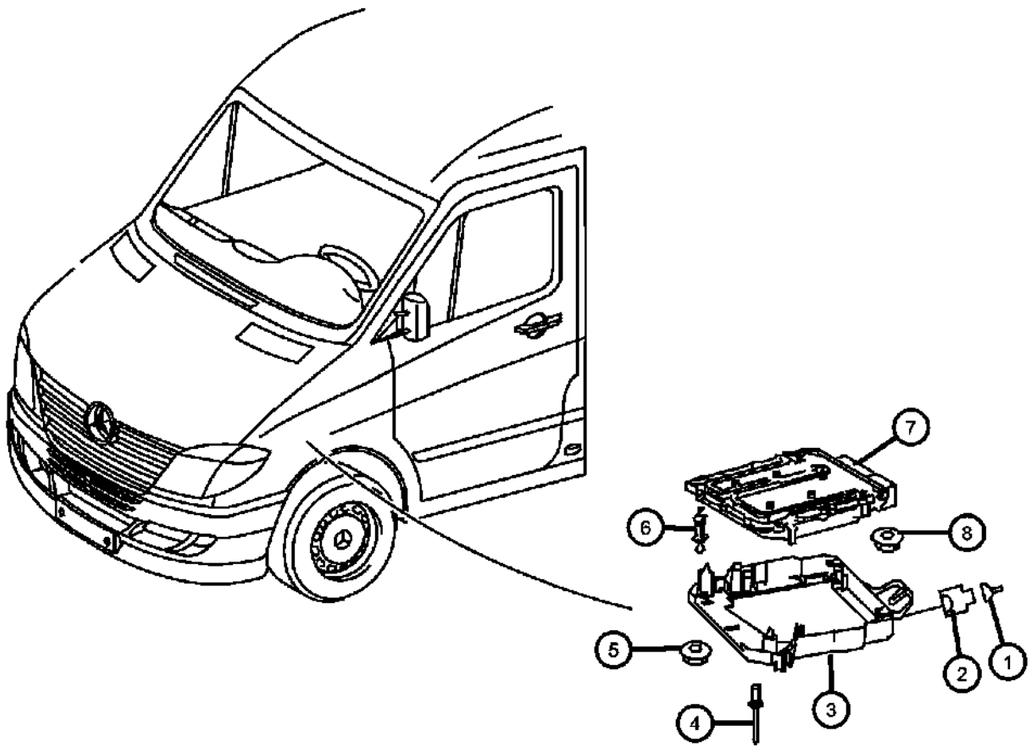

ITEM	PART NUMBER	QTY	LINE	SERIES	BODY	ENGINE	TRANS	TRIM	DESCRIPTION
1									TERMINAL
	05103873AA	3	3, 7	L	03, 05	EG2, EXM	DGZ		
		3	2, 3, 6, 7	L	13, 15, 17, 53, 55	EG2, EXM	DGZ		
2	05120278AA	1	2, 3, 6, 7	L		EG2, EXM	DGZ		CONNECTOR
3	68013397AA	1	2, 3, 6, 7	L		EXM	DGZ		BRACKET, Engine Control Module
4	68013397AA	1							RIVET, (NOT SERVICED)
5									NUT
	68004878AA	1	2, 3, 6, 7	L	13, 15, 17, 53, 55	EG2, EXM	DGZ		Bracket to Body M6
		1	3, 7	L	03, 05	EXM	DGZ		Bracket to Body M6
6	68011848AA	2	2, 3, 6, 7	L		EG2	DGZ		RETAINER, Engine Control Module
7									MODULE, Powertrain Control
	68022860AA	1	2, 3, 6, 7	L		EG2			
	68028085AA	1	2, 3, 6, 7	L		EXM	DGZ		
8	68004878AA	4	2, 3, 6, 7	L	13, 15, 17, 53, 55	EG2, EXM	DGZ		NUT, Control Unit Fixture M6

SPRINTER (VB)

SERIES	LINE	BODY	ENGINE	TRANSMISSION
L = LOWLINE	3 = HD DODGE 2WD 6 = Lt. Duty DODGE 4WD 2 = Med. Duty DODGE 2WD 7 = Med. Duty DODGE 4WD	17 = VAN WHEEL BASE 7 55 = WAGON WHEEL BASE 5 15 = VAN WHEEL BASE 5 53 = 119 WB 13 = 119 WB 05 = CAB CHASSIS WHEEL BASE 5 03 = CAB CHASSIS WHEEL BASE 3	EG2 = 3.5L V6 Gas Engine EXM = 3.0L V6 Turbo Diesel Engine	DGZ = 5-Speed Auto W5A380 Transmission

Modules Engine Compartment
Figure 8-406

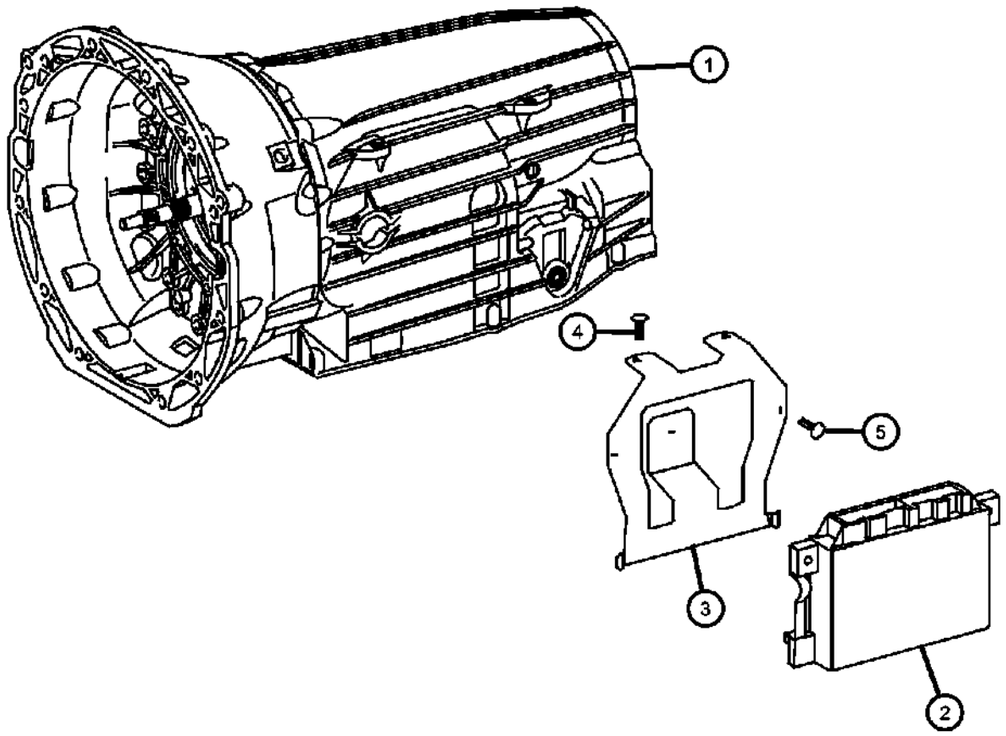

ITEM	PART NUMBER	QTY	LINE	SERIES	BODY	ENGINE	TRANS	TRIM	DESCRIPTION
1	68004878AA	4							TRANSMISSION, See Transmission Section, (NOT SERVICED)
2									MODULE, Transmission Control
	68035952AA	1	3, 7	L	03, 05	EG2, EXM	DGZ		
		1	2, 3, 6, 7	L	13, 15, 17, 53, 55	EG2, EXM	DGZ		
3	68013402AA	1	2, 3, 6, 7	L		EG2, EXM	DGZ		BRACKET, Module
4									SCREW, Tapping
	06104566AA	3	3, 7	L	03, 05	EG2, EXM	DGZ		Bracket Mounting 4.2x13
		3	2, 3, 6, 7	L	13, 15, 17, 53, 55	EG2, EXM	DGZ		Bracket Mounting 4.2x13
5									SCREW
	06104567AA	2	3, 7	L	03, 05	EG2, EXM	DGZ		Control Unit to Bracket 4.2x16
		2	2, 3, 6, 7	L	13, 15, 17, 53, 55	EG2, EXM	DGZ		Control Unit to Bracket 4.2x16
-6									CONNECTOR
	05120838AA	1	2, 3, 6, 7	L		EG2, EXM	DGZ		[18 Pin N15/3]
	05120839AA	1	2, 3, 6, 7	L		EG2, EXM	DGZ		[12 Pin N15/3]
	68011208AA	1	2, 3, 6, 7	L		EG2, EXM	DGZ		[N15/3] COnnector At Transmission Control Unit

SPRINTER (VB)

SERIES	LINE	BODY	ENGINE	TRANSMISSION
L = LOWLINE	3 = HD DODGE 2WD 6 = Lt. Duty DODGE 4WD 2 = Med. Duty DODGE 2WD 7 = Med. Duty DODGE 4WD	17 = VAN WHEEL BASE 7 55 = WAGON WHEEL BASE 5 15 = VAN WHEEL BASE 5 53 = 119 WB 13 = 119 WB 05 = CAB CHASSIS WHEEL BASE 5 03 = CAB CHASSIS WHEEL BASE 3	EG2 = 3.5L V6 Gas Engine EXM = 3.0L V6 Turbo Diesel Engine	DGZ = 5-Speed Auto W5A380 Transmission

Modules Body
Figure 8-407

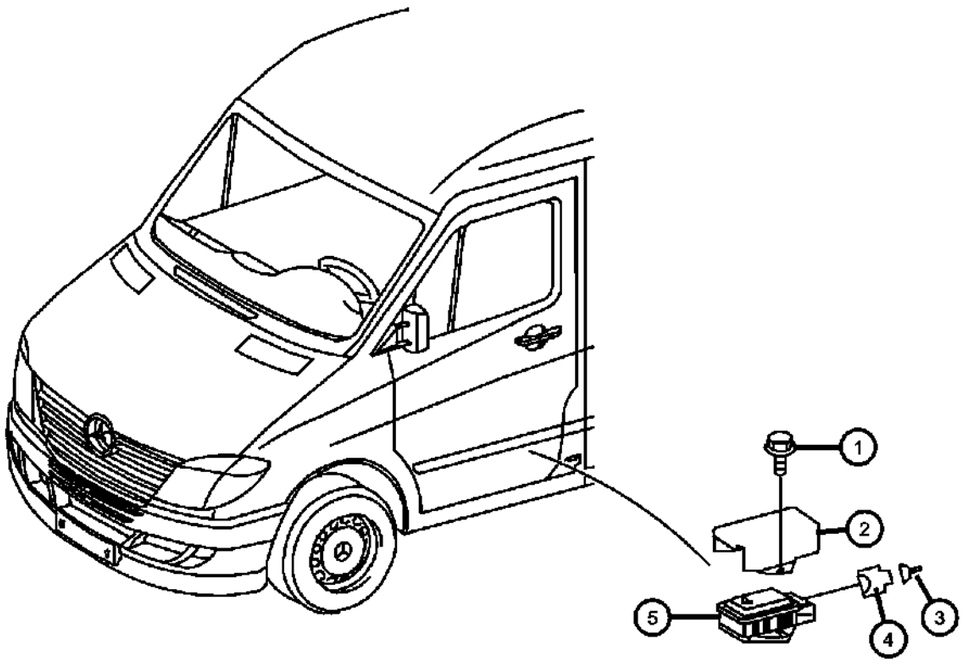

ITEM	PART NUMBER	QTY	LINE	SERIES	BODY	ENGINE	TRANS	TRIM	DESCRIPTION
1									SCREW, Pan Head, M6x1.00x16.00
	06104142AA	2	3, 7	L	03, 05	EG2, EXM	DGZ		
		2	2, 3, 6, 7	L	13, 15, 17, 53, 55	EG2, EXM	DGZ		
2	05129653AA	1	2, 3, 6, 7	L		EG2, EXM	DGZ		COVER, Fuseblock, Turn Rate Sensor
3									TERMINAL
	05103873AA	3	3, 7	L	03, 05	EG2, EXM	DGZ		0.75 MM2,MQS;B24/15
		3	2, 3, 6, 7	L	13, 15, 17, 53, 55	EG2, EXM	DGZ		0.75 MM2,MQS;B24/15
4	68011286AA	1	2, 3, 6, 7	L		EG2, EXM	DGZ		CONNECTOR, Turn Rate Sensor 4-PIN,B24/15
5	68013423AA	1	2, 3, 6, 7	L		EG2, EXM	DGZ		SENSOR, Yaw Rate, Turn Rate Sensor

SPRINTER (VB)

SERIES	LINE	BODY	ENGINE	TRANSMISSION
L = LOWLINE	3 = HD DODGE 2WD 6 = Lt. Duty DODGE 4WD 2 = Med. Duty DODGE 2WD 7 = Med. Duty DODGE 4WD	17 = VAN WHEEL BASE 7 55 = WAGON WHEEL BASE 5 15 = VAN WHEEL BASE 5 53 = 119 WB 13 = 119 WB 05 = CAB CHASSIS WHEEL BASE 5 03 = CAB CHASSIS WHEEL BASE 3	EG2 = 3.5L V6 Gas Engine EXM = 3.0L V6 Turbo Diesel Engine	DGZ = 5-Speed Auto W5A380 Transmission

Modules Body
Figure 8-408

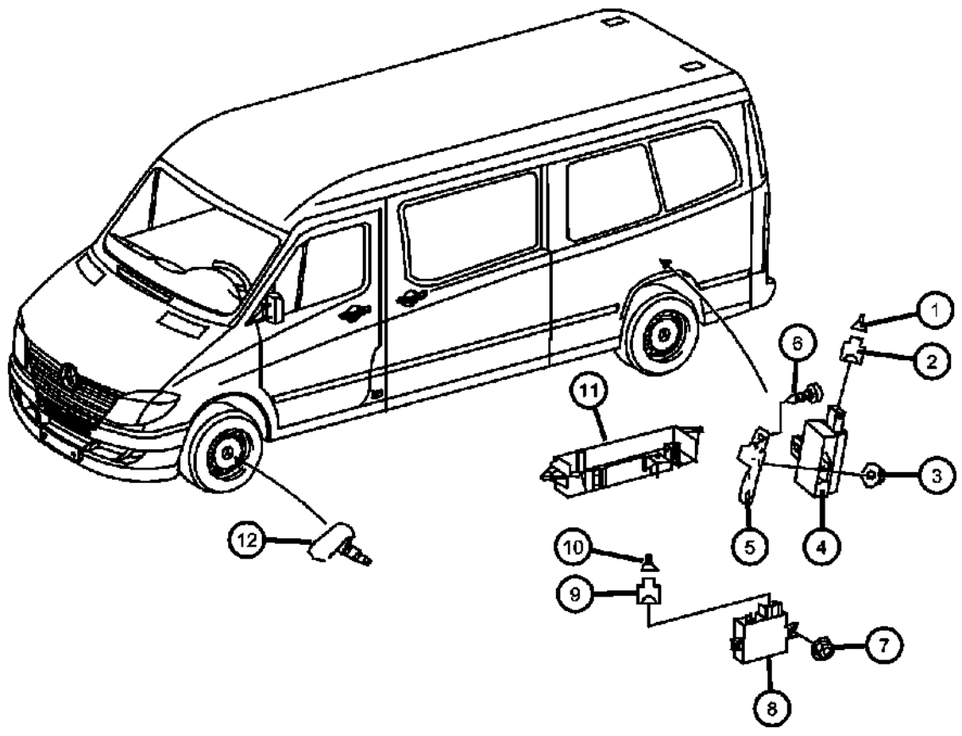

ITEM	PART NUMBER	QTY	LINE	SERIES	BODY	ENGINE	TRANS	TRIM	DESCRIPTION
1	05103874AA	1	2, 3, 6, 7	L		EG2, EXM	DGZ		TERMINAL
2	68011286AA	1	2, 3, 6, 7	L		EG2, EXM	DGZ		CONNECTOR
3									NUT
	68004878AA	2	3, 7	L	03, 05	EG2, EXM	DGZ		Bracket to Floor M6
		2	2, 3, 6, 7	L	13, 15, 17, 53, 55	EG2, EXM	DGZ		Bracket to Floor M6
	68026696AA	2	2, 6	L	13, 15, 17, 53, 55	EG2, EXM	DGZ		Bracket To Floor
4	68013414AA	2	2, 6	L		EG2, EXM	DGZ		MODULE, Low Tire Pressure Warning
5	68013426AA	1	2, 6	L		EG2, EXM	DGZ		BRACKET, Antenna
6	06104566AA	2	2, 3, 6, 7	L		EG2, EXM	DGZ		SCREW, Tapping, Protective Cap to Bracket 4.2x13
7									NUT
	68004878AA	2	3, 7	L	03, 05	EXM	DGZ		Control Unit Fixture M6
		2	3, 7	L	13, 15, 17, 53, 55	EXM	DGZ		Control Unit Fixture M6
8	68019246AA	1	2, 6	L		EG2, EXM	DGZ		MODULE, Low Tire Pressure Warning
9	05103750AA	1	2, 3, 6, 7	L		EG2, EXM	DGZ		CONNECTOR, Tire Pressure Monitor Control Module 18-PIN;N88/1
10									TERMINAL
	05103873AA	3	3, 7	L	03, 05	EG2, EXM	DGZ		0.75 MM2 MQS;N88/1
		3	2, 3, 6, 7	L	13, 15, 17, 53, 55	EG2, EXM	DGZ		0.75 MM2 MQS;N88/1
11	68004810AA	1	2, 3, 6, 7	L		EG2, EXM	DGZ		COVER, Antenna
12	68006771AA	4	2, 6	L		EG2, EXM	DGZ		SENSOR, Tire Pressure, Valve stem

SPRINTER (VB)

SERIES	LINE	BODY	ENGINE	TRANSMISSION
L = LOWLINE	3 = HD DODGE 2WD 6 = Lt. Duty DODGE 4WD 2 = Med. Duty DODGE 2WD 7 = Med. Duty DODGE 4WD	17 = VAN WHEEL BASE 7 55 = WAGON WHEEL BASE 5 15 = VAN WHEEL BASE 5 53 = 119 WB 13 = 119 WB 05 = CAB CHASSIS WHEEL BASE 5 03 = CAB CHASSIS WHEEL BASE 3	EG2 = 3.5L V6 Gas Engine EXM = 3.0L V6 Turbo Diesel Engine	DGZ = 5-Speed Auto W5A380 Transmission

Modules Body
Figure 8-409

ITEM	PART NUMBER	QTY	LINE	SERIES	BODY	ENGINE	TRANS	TRIM	DESCRIPTION
1									BOLT, Torx Head, M6x1.0x55.00
	06104188AA	2	3, 7	L	03, 05	EG2, EXM	DGZ		
		2	2, 3, 6, 7	L	13, 15, 17, 53, 55	EG2, EXM	DGZ		
2	68013424AA	2	2, 3, 6, 7	L		EG2, EXM	DGZ		SENSOR, Side Airbag Impact
3	68011282AA	2	2, 3, 6, 7	L		EG2, EXM	DGZ		CONNECTOR, Sensor Sidebag 2-PIN;A53,A54
4	05103874AA	1	2, 3, 6, 7	L		EG2, EXM	DGZ		TERMINAL, 0.75MM2,MQS,A53,A54
5	68023545AA	1	2, 3, 6, 7	L		EG2, EXM	DGZ		MODULE, Air Bag Control

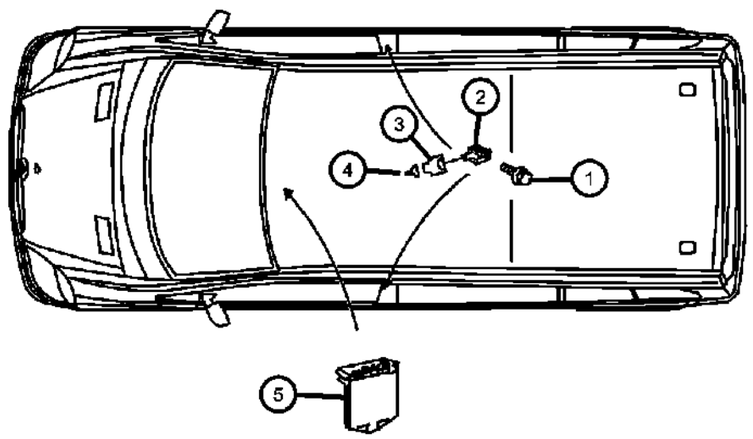

SPRINTER (VB)

SERIES	LINE	BODY	ENGINE	TRANSMISSION
L = LOWLINE	3 = HD DODGE 2WD 6 = Lt. Duty DODGE 4WD 2 = Med. Duty DODGE 2WD 7 = Med. Duty DODGE 4WD	17 = VAN WHEEL BASE 7 55 = WAGON WHEEL BASE 5 15 = VAN WHEEL BASE 5 53 = 119 WB 13 = 119 WB 05 = CAB CHASSIS WHEEL BASE 5 03 = CAB CHASSIS WHEEL BASE 3	EG2 = 3.5L V6 Gas Engine EXM = 3.0L V6 Turbo Diesel Engine	DGZ = 5-Speed Auto W5A380 Transmission

Modules Body
Figure 8-410

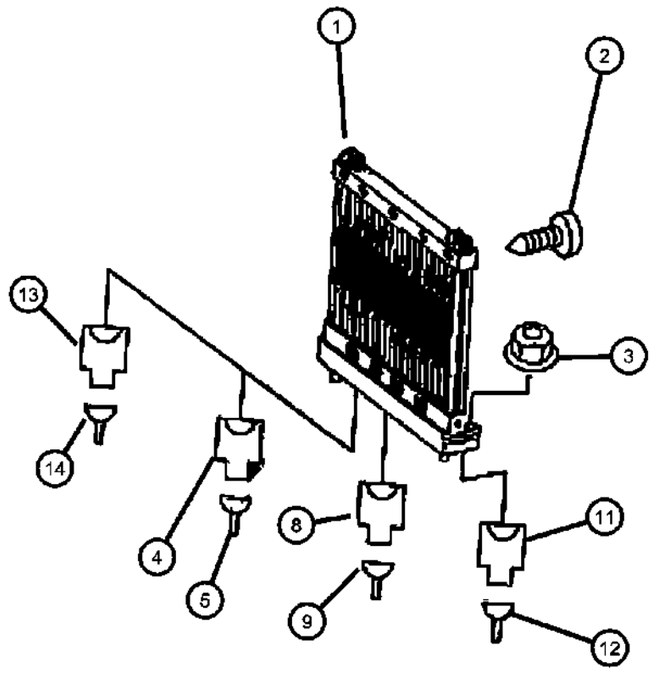

ITEM	PART NUMBER	QTY	LINE	SERIES	BODY	ENGINE	TRANS	TRIM	DESCRIPTION
1	68012665AA	1	2, 3, 6, 7	L		EG2, EXM	DGZ		HEATER, Electric Power Heater Control Module / With [HB9]
2	68012630AA	2	2, 3, 6, 7	L		EG2, EXM	DGZ		SCREW
3	06105169AA	2	2, 3, 6, 7	L		EG2, EXM	DGZ		NUT, Heater Module Mounting [M8]
4	05133296AA	1	2, 3, 6, 7	L		EG2, EXM	DGZ		CONNECTOR, [N33/2]
5									TERMINAL
	05103880AA	AR	2, 3, 6, 7	L		EG2, EXM	DGZ		[0.5 - 1.0 MM2 / JPT;N33/2]
	05133370AA	2	2, 3, 6, 7	L		EG2, EXM	DGZ		[1.5 - 2.5 MM2 JPT; N33/2]
-6									GASKET
	05103661AA	1	2, 3, 6, 7	L		EG2, EXM	DGZ		[0.5 - 1.0 MM; N33/2]
	05120833AA	2	2, 3, 6, 7	L		EG2, EXM	DGZ		[1.0 - 2.5 MM; N33/2]
-7	05120833AA	2	2, 3, 6, 7	L		EG2, EXM	DGZ		GASKET, [N33/2]
8	68011286AA	1	2, 3, 6, 7	L		EG2, EXM	DGZ		CONNECTOR, [4 Pin / N33/2]
9	05103874AA	1	2, 3, 6, 7	L		EG2, EXM	DGZ		TERMINAL, [.75 MM2, MQS; N33/2]
-10	05120860AA	1	2, 3, 6, 7	L		EG2, EXM	DGZ		GASKET, [1.6 - 1.9 MM2; N33/2]
11	05120277AA	1	2, 3, 6, 7	L		EG2, EXM	DGZ		CONNECTOR, Wiring Repair, Temperature Sensor / [2 Pin B10/6]]
12	05120860AA	1	2, 3, 6, 7	L		EG2, EXM	DGZ		GASKET, [1.6 - 1.9 MM2; B10/6]
13	68011231AA	1	2, 3, 6, 7	L		EG2, EXM	DGZ		CONNECTOR, [PTC] Heater Booster / 4 Pin N33/4
14	05103873AA	3	2, 3, 6, 7	L	13, 15, 17, 53, 55	EG2, EXM	DGZ		TERMINAL, [.75 MM2 MQS; N33/4]

SPRINTER (VB)

SERIES	LINE	BODY	ENGINE	TRANSMISSION
L = LOWLINE	3 = HD DODGE 2WD 6 = Lt. Duty DODGE 4WD 2 = Med. Duty DODGE 2WD 7 = Med. Duty DODGE 4WD	17 = VAN WHEEL BASE 7 55 = WAGON WHEEL BASE 5 15 = VAN WHEEL BASE 5 53 = 119 WB 13 = 119 WB 05 = CAB CHASSIS WHEEL BASE 5 03 = CAB CHASSIS WHEEL BASE 3	EG2 = 3.5L V6 Gas Engine EXM = 3.0L V6 Turbo Diesel Engine	DGZ = 5-Speed Auto W5A380 Transmission

Modules Body
Figure 8-420

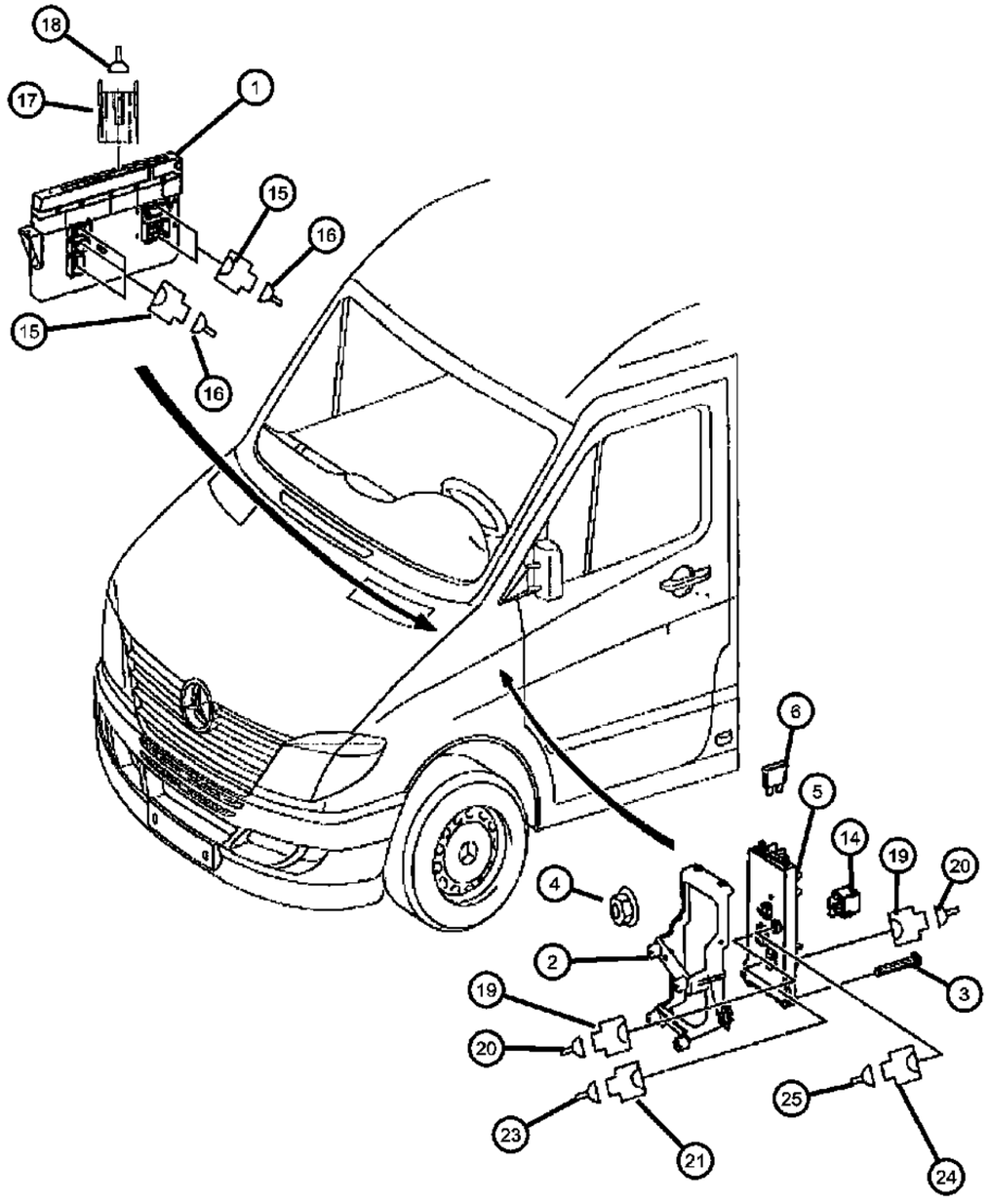

ITEM	PART NUMBER	QTY	LINE	SERIES	BODY	ENGINE	TRANS	TRIM	DESCRIPTION
1	68013368AA	1	2, 3, 6, 7	L		EG2, EXM	DGZ		MODULE, Body Controller
2	68013376AA	1	2, 3, 6, 7	L		EG2, EXM	DGZ		BRACKET, Central Electrical System
3	68013376AA	1							SCREW, (NOT SERVICED)
4									NUT
	68004878AA	4	3, 7	L	03, 05	EG2, EXM	DGZ		Mounting, Electrical Center [M6]
		4	2, 3, 6, 7	L	13, 15, 17, 53, 55	EG2, EXM	DGZ		Mounting, Electrical Center [M6]
5	68013375AA	1	2, 3, 6, 7	L		EG2, EXM	DGZ		BLOCK, Fuse
6									FUSE, Mini, 5 Amp, Tan
	05101465AA	99	3, 7	L	03, 05	EG2, EXM	DGZ		
		99	2, 3, 6, 7	L	13, 15, 17, 53, 55	EG2, EXM	DGZ		
-7									FUSE, Blade Type, 7.5 AMP
	05101466AA	99	3, 7	L	03, 05	EG2, EXM	DGZ		
		99	2, 3, 6, 7	L	13, 15, 17, 53, 55	EG2, EXM	DGZ		
-8									FUSE, Standard, 10 AMP, Red
	05104643AA	99	3, 7	L	03, 05	EG2, EXM	DGZ		
		99	2, 3, 6, 7	L	13, 15, 17, 53, 55	EXM, EG2	DGZ		
-9									FUSE, Standard, 15 AMP, Light Blue
	05101467AA	99	3, 7	L	03, 05	EG2, EXM	DGZ		
		99	2, 3, 6, 7	L	13, 15, 17, 53, 55	EG2, EXM	DGZ		
-10									FUSE, Blade Type, 20 AMP, Yellow
	05101468AA	99	3, 7	L	03, 05	EG2, EXM	DGZ		
		99	2, 3, 6, 7	L	13, 15, 17, 53, 55	EG2, EXM	DGZ		
-11									FUSE
	05104644AA	99	3, 7	L	03, 05	EG2, EXM	DGZ		[25 Amps]
		99	2, 3, 6, 7	L	13, 15, 17, 53, 55	EG2, EXM	DGZ		[25 Amps]
-12									FUSE
	05101469AA	99	3, 7	L	03, 05	EG2, EXM	DGZ		[30 Amp]
		99	2, 3, 6, 7	L	13, 15, 17, 53, 55	EG2, EXM	DGZ		[30 Amp]

SPRINTER (VB)

SERIES	LINE	BODY	ENGINE	TRANSMISSION
L = LOWLINE	3 = HD DODGE 2WD 6 = Lt. Duty DODGE 4WD 2 = Med. Duty DODGE 2WD 7 = Med. Duty DODGE 4WD	17 = VAN WHEEL BASE 7 55 = WAGON WHEEL BASE 5 15 = VAN WHEEL BASE 5 53 = 119 WB 13 = 119 WB 05 = CAB CHASSIS WHEEL BASE 5 03 = CAB CHASSIS WHEEL BASE 3	EG2 = 3.5L V6 Gas Engine EXM = 3.0L V6 Turbo Diesel Engine	DGZ = 5-Speed Auto W5A380 Transmission

Modules Body
Figure 8-420

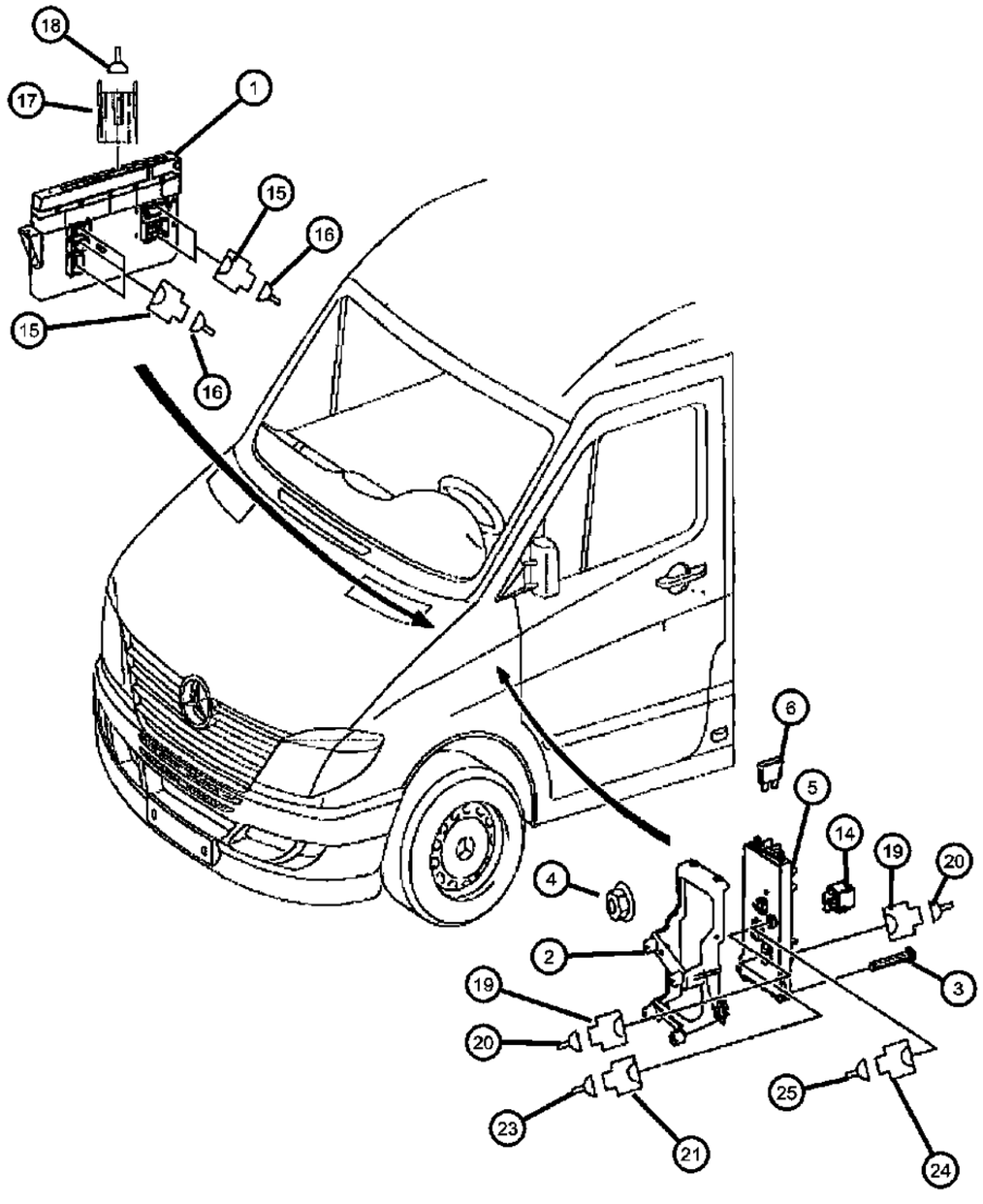

ITEM	PART NUMBER	QTY	LINE	SERIES	BODY	ENGINE	TRANS	TRIM	DESCRIPTION
-13	68005061AA	AR	2, 3, 6, 7	L		EG2, EXM	DGZ		TERMINAL, [25 Amp]
14									RELAY
	05101505AA	1	3, 7	L	03, 05	EG2, EXM	DGZ		Windshield Wiper [On / Off]
		1	3, 7	L	03, 05	EG2, EXM	DGZ		Starter Motor / Terminal [50]
		1	2, 3, 6, 7	L	13, 15, 17, 53, 55	EG2, EXM	DGZ		Starter Motor / Terminal [50]
		1	2, 3, 6, 7	L	13, 15, 17, 53, 55	EG2, EXM	DGZ		Windshield Wiper [On / Off]
		1	2, 3, 6, 7	L	13, 15, 17, 53, 55	EG2, EXM	DGZ		Windshield Wiper Stage [1 / 2]
		1	3, 7	L	03, 05	EG2, EXM	DGZ		Windshield Wiper Stage [1 / 2]
	05103560AA	1	2, 3, 6, 7	L	13, 15, 17, 53, 55	EG2, EXM	DGZ		Fuel Pump & Horn
	05120360AA	1	3, 7	L	03, 05	EG2, EXM	DGZ		Circuit [15R]
		1	3, 7	L	03, 05	EG2, EXM	DGZ		Engine Control / Terminal [87]
		1	2, 6	L	13, 15, 17, 53, 55	EG2	DGZ		Ignition / Terminal [15]
		1	2, 3, 6, 7	L	13, 15, 17, 53, 55	EG2, EXM	DGZ		Ignition / Terminal [15]
		1	2, 3, 6, 7	L	13, 15, 17, 53, 55	EG2, EXM	DGZ		Engine Control / Terminal [87]
		1	2, 3, 6, 7	L	13, 15, 17, 53, 55	EG2, EXM	DGZ		Circuit [15R]
15									CONNECTOR
	05103750AA	1	2, 3, 6, 7	L		EG2, EXM	DGZ		[18 Pin / N10]
	05120753AA	1	2, 3, 6, 7	L		EG2, EXM	DGZ		[24 Pin / N10]
	05120754AA	1	2, 3, 6, 7	L		EG2, EXM	DGZ		[52 Pin / N10]
	68011229AA	1	2, 3, 6, 7	L		EG2, EXM	DGZ		[6 Pin / N10]
	68011289AA	1	2, 3, 6, 7	L		EXM, EG2	DGZ		[20 Pin / N10]
16									TERMINAL
	05103873AA	3	3, 7	L	03, 05	EG2, EXM	DGZ		[0.75 MM2 / MQS N10]
		3	2, 3, 6, 7	L	13, 15, 17, 53, 55	EG2, EXM	DGZ		[0.75 MM2 / MQS N10]
17	05133407AA	1	2, 3, 6, 7	L		EG2, EXM	DGZ		BLOCK, Fuse, Fuse Holder / Air Conditioner [F69]
18	68016737AA	AR	2, 3, 6, 7	L		EG2, EXM	DGZ		TERMINAL, [6.0 - 10.0 MM2]
19									CONNECTOR

SPRINTER (VB)

SERIES	LINE	BODY	ENGINE	TRANSMISSION
L = LOWLINE	3 = HD DODGE 2WD 6 = Lt. Duty DODGE 4WD 2 = Med. Duty DODGE 2WD 7 = Med. Duty DODGE 4WD	17 = VAN WHEEL BASE 7 55 = WAGON WHEEL BASE 5 15 = VAN WHEEL BASE 5 53 = 119 WB 13 = 119 WB 05 = CAB CHASSIS WHEEL BASE 5 03 = CAB CHASSIS WHEEL BASE 3	EG2 = 3.5L V6 Gas Engine EXM = 3.0L V6 Turbo Diesel Engine	DGZ = 5-Speed Auto W5A380 Transmission

Modules Body
Figure 8-420

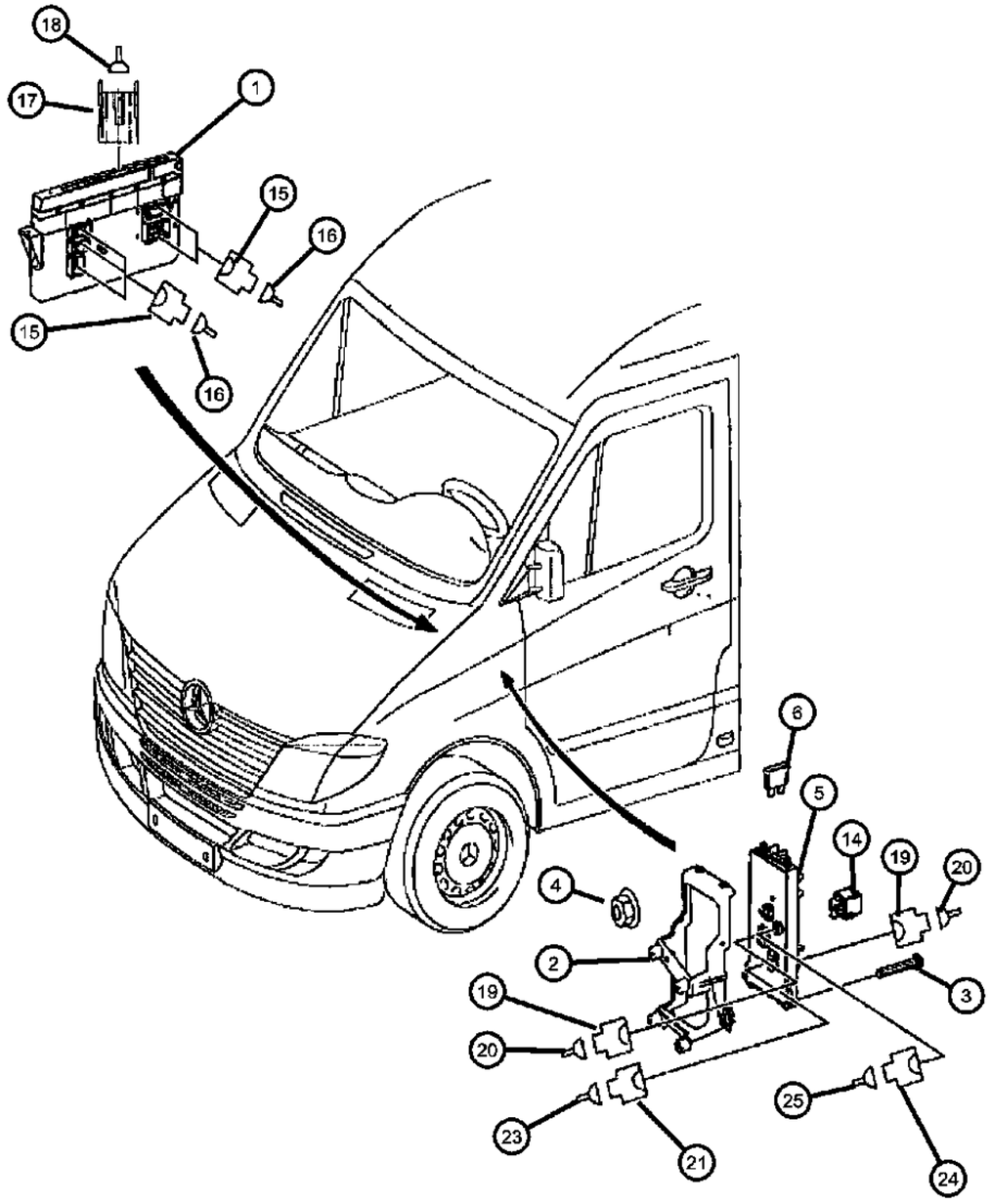

ITEM	PART NUMBER	QTY	LINE	SERIES	BODY	ENGINE	TRANS	TRIM	DESCRIPTION
	68011348AA	1	2, 3, 6, 7	L		EG2, EXM	DGZ		[15 Pin K40/9]
	68011398AA	1	2, 3, 6, 7	L		EG2, EXM	DGZ		[18 Pin K40/9]
20									TERMINAL
	05103893AA	AR	2, 3, 6, 7	L		EG2, EXM	DGZ		[1.5 - 2.5 MM2;K40/9]
	05103892AA	1	2, 3, 6, 7	L		EG2, EXM	DGZ		[0.5 - 1.0 MM2 MCP;K40/9]
21									CONNECTOR
	68011273AA	1	2, 3, 6, 7	L		EG2, EXM	DGZ		[3 Pin; K40/9]
	68016735AA	1	2, 3, 6, 7	L		EG2, EXM	DGZ		[14 Pin; K40/9]
-22	68016736AA	1	2, 3, 6, 7	L		EG2, EXM	DGZ		COVER, Fuseblock, [K40/9]
23	68011163AA	AR	2, 3, 6, 7	L		EG2, EXM	DGZ		TERMINAL, [16-25 QMM; K40/9]
24	05103873AA	AR	2, 3, 6, 7	L		EG2, EXM	DGZ		TERMINAL, [.075 MM2: MQ2 K40/9]
25									TERMINAL
	05103873AA	3	3, 7	L	03, 05	EG2, EXM	DGZ		[.075 MM2: MQ2 K40/9]
		3	2, 3, 6, 7	L	13, 15, 17, 53, 55	EG2, EXM	DGZ		[.075 MM2: MQ2 K40/9]

SPRINTER (VB)

SERIES	LINE	BODY	ENGINE	TRANSMISSION
L = LOWLINE	3 = HD DODGE 2WD 6 = Lt. Duty DODGE 4WD 2 = Med. Duty DODGE 2WD 7 = Med. Duty DODGE 4WD	17 = VAN WHEEL BASE 7 55 = WAGON WHEEL BASE 5 15 = VAN WHEEL BASE 5 53 = 119 WB 13 = 119 WB 05 = CAB CHASSIS WHEEL BASE 5 03 = CAB CHASSIS WHEEL BASE 3	EG2 = 3.5L V6 Gas Engine EXM = 3.0L V6 Turbo Diesel Engine	DGZ = 5-Speed Auto W5A380 Transmission

AR = use ase required - = Non illustrrated part

<< RETURN TO GROUP INDEX

Modules Body
Figure 8-425

ITEM	PART NUMBER	QTY	LINE	SERIES	BODY	ENGINE	TRANS	TRIM	DESCRIPTION
1	05104609AA	4	2, 3, 6, 7	L		EG2, EXM	DGZ		SCREW
2	05127261AA	1	2, 3, 6, 7	L		EG2, EXM	DGZ		CONNECTOR, 7 Way

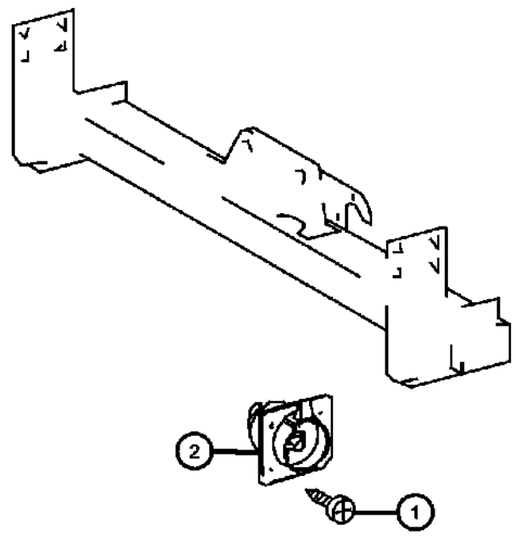

SPRINTER (VB)

SERIES	LINE	BODY	ENGINE	TRANSMISSION
L = LOWLINE	3 = HD DODGE 2WD 6 = Lt. Duty DODGE 4WD 2 = Med. Duty DODGE 2WD 7 = Med. Duty DODGE 4WD	17 = VAN WHEEL BASE 7 55 = WAGON WHEEL BASE 5 15 = VAN WHEEL BASE 5 53 = 119 WB 13 = 119 WB 05 = CAB CHASSIS WHEEL BASE 5 03 = CAB CHASSIS WHEEL BASE 3	EG2 = 3.5L V6 Gas Engine EXM = 3.0L V6 Turbo Diesel Engine	DGZ = 5-Speed Auto W5A380 Transmission

Fuse Block Fuses and Relays
Figure 8-510

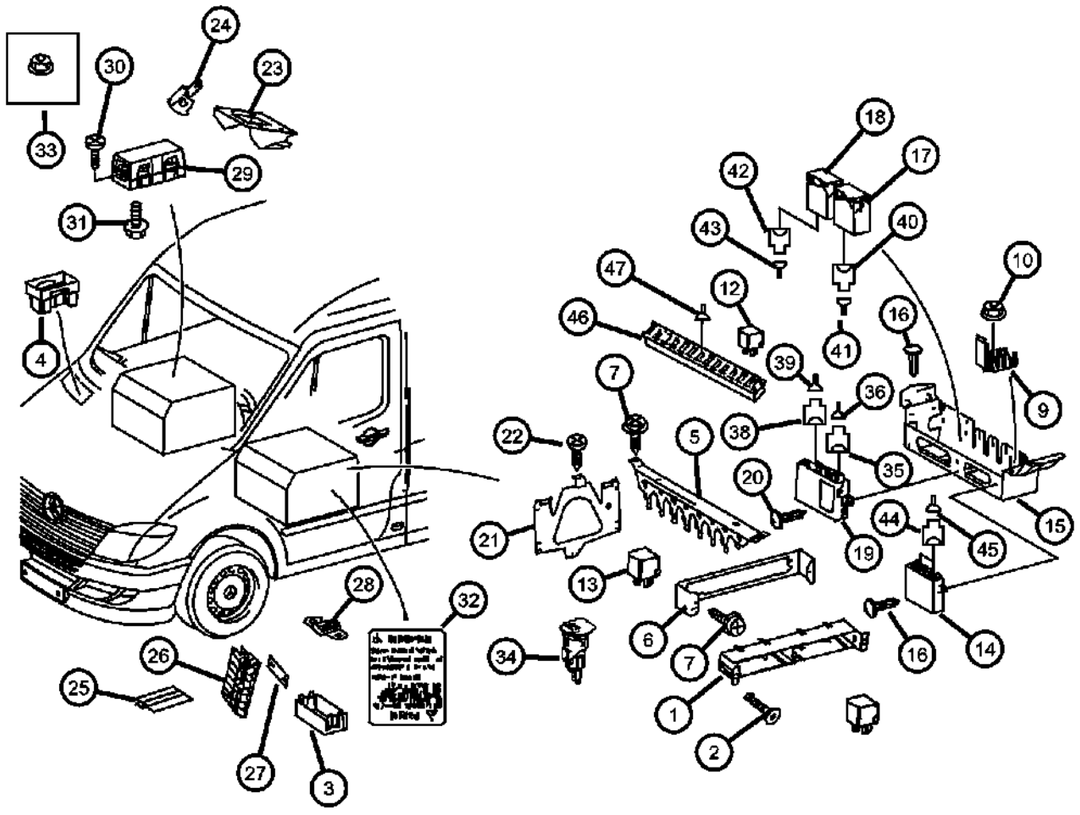

ITEM	PART NUMBER	QTY	LINE	SERIES	BODY	ENGINE	TRANS	TRIM	DESCRIPTION
1	05120507AA	1	2, 3, 6, 7	L		EG2, EXM	DGZ		CONNECTOR
2	68033265AA	2	2, 3, 6, 7	L		EG2, EXM	DGZ		SCREW
3	68013387AA	1	2, 3, 6, 7	L		EG2, EXM	DGZ		BRACKET
4	05139184AA	1	2, 3, 6, 7	L	13, 15, 17, 53, 55	EG2, EXM	DGZ		CONNECTOR
5	68011039AA	1	2, 3, 6, 7	L		EG2, EXM	DGZ		BRACKET, Relay
6	68011038AA	1	2, 3, 6, 7	L		EG2, EXM	DGZ		BRACKET, Relay
7	06104527AA	6	2, 3, 6, 7	L	13, 15, 17, 53, 55	EG2, EXM	DGZ		SCREW
-8	06104566AA	2	2, 3, 6, 7	L		EG2, EXM	DGZ		SCREW, Tapping, [4.2x13]
9	05120249AA	2	2, 3, 6, 7	L		EG2, EXM	DGZ		RETAINER
10	05097674AA	2	2, 3, 6, 7	L	13, 15, 17, 53, 55	EXM, EG2	DGZ		NUT, Hex, Terminal Block To Seat Box [M6]
-11	05104660AA	4	2, 3, 6, 7	L	13, 15, 17, 53, 55	EG2, EXM	DGZ		NUT, Terminal Block To Seat Box [M4]
12									RELAY
	05103560AA	1	2, 3, 6, 7	L	13, 15, 17, 53, 55	EG2, EXM	DGZ		[HDC / HDB / 3JV / XG3 / HAB] / [K15/3 Pos. 7]
		1	2, 3, 6, 7	L	13, 15, 17, 53, 55	EG2, EXM	DGZ		[3EN] / Circuit [15 K88, Pos1]
13									RELAY
	05101505AA	1	2, 3, 6, 7	L	13, 15, 17, 53, 55	EG2, EXM	DGZ		With [GBG]
		1	2, 3, 6, 7	L	13, 15, 17, 53, 55	EG2, EXM	DGZ		With [HDB] And Or [XG3] + [HAB]
		1	2, 3, 6, 7	L	13, 15, 17, 53, 55	EG2, EXM	DGZ		With [BNB]
		1	2, 3, 6, 7	L	13, 15, 17, 53, 55	EG2, EXM	DGZ		With [GFA] Or With [GFA + LSA]
	05120360AB	1	2, 3, 6, 7	L		EG2	DGZ		With [GBG, XFK, DGZ, XEY, 3EN, XBE, XA3, NHX, CK7, XFM, NXF, GEH]
		1	2, 3, 6, 7	L		EG2, EXM	DGZ		Secondary Air Pump [EG2]
14	68013383AB	1	2, 3, 6, 7	L		EG2, EXM	DGZ		MODULE, With [XCF, NXF]
15	68013390AA	1	2, 3, 6, 7	L		EG2, EXM	DGZ		BLOCK, Fuse, Control Unit Holder
16	06104566AA	3	2, 3, 6, 7	L	13, 15, 17, 53, 55	EG2, EXM	DGZ		SCREW, Tapping, [4.2x13]
17	05139996AA	1	2, 3, 6, 7	L	13, 15, 17, 53, 55	EG2, EXM	DGZ		FLASHER MODULE, FLASHER MODULE-TURN SIGNAL
18	68013386AA	1	2, 3, 6, 7	L		EG2, EXM	DGZ		MODULE, HID Ballast

SPRINTER (VB)

SERIES	LINE	BODY	ENGINE	TRANSMISSION
L = LOWLINE	3 = HD DODGE 2WD 6 = Lt. Duty DODGE 4WD 2 = Med. Duty DODGE 2WD 7 = Med. Duty DODGE 4WD	17 = VAN WHEEL BASE 7 55 = WAGON WHEEL BASE 5 15 = VAN WHEEL BASE 5 53 = 119 WB 13 = 119 WB 05 = CAB CHASSIS WHEEL BASE 5 03 = CAB CHASSIS WHEEL BASE 3	EG2 = 3.5L V6 Gas Engine EXM = 3.0L V6 Turbo Diesel Engine	DGZ = 5-Speed Auto W5A380 Transmission

Fuse Block Fuses and Relays
Figure 8-510

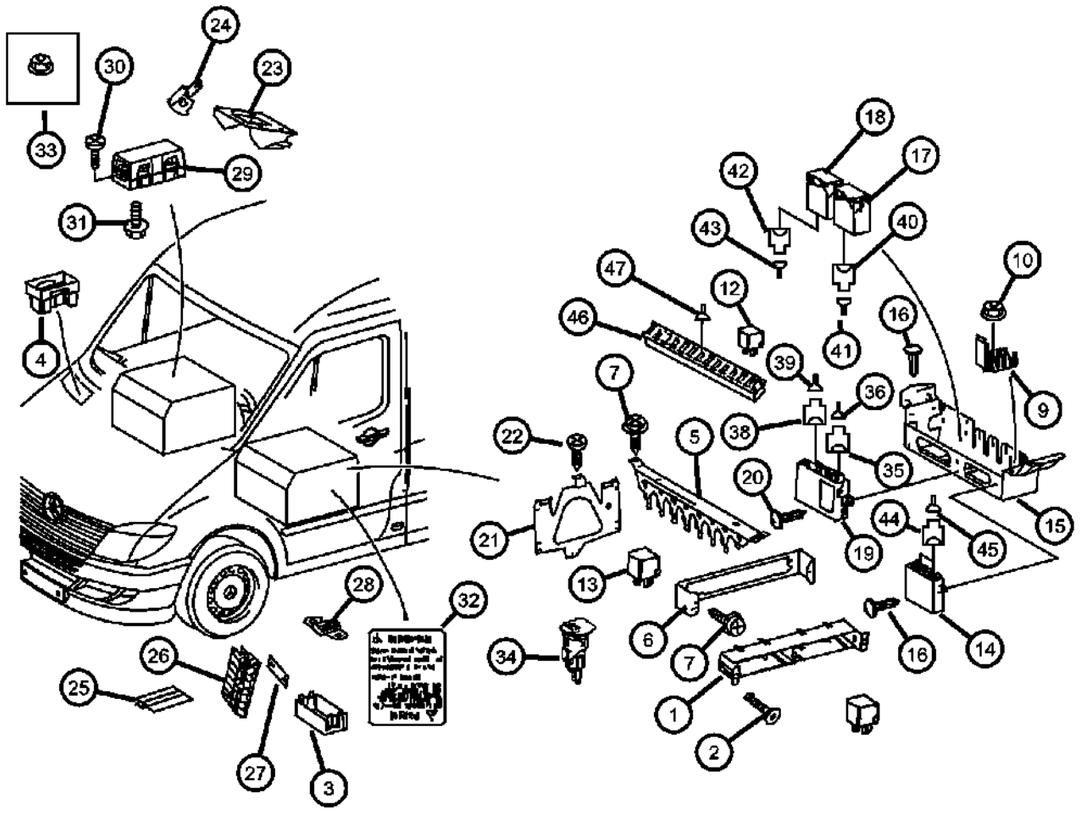

ITEM	PART NUMBER	QTY	LINE	SERIES	BODY	ENGINE	TRANS	TRIM	DESCRIPTION
19	68013388AA	1	2, 3, 6, 7	L	13, 15, 17, 53, 55	EG2, EXM	DGZ		MODULE, Trailer Tow
20	06104566AA	2	2, 3, 6, 7	L	13, 15, 17, 53, 55	EG2, EXM	DGZ		SCREW, Tapping, [4.2x13]
21	68013405AA	1	2, 3, 6, 7	L	13, 15, 17, 53, 55	EG2, EXM	DGZ		BRACKET
22	06104566AA	2	2, 3, 6, 7	L		EG2, EXM	DGZ		SCREW, Tapping
23	68020664AA	1	2, 3, 6, 7	L		EG2, EXM	DGZ		BRACKET, Prefuse Box
24	68018580AA	1	2, 3, 6, 7	L		EG2, EXM	DGZ		BRACKET, Prefuse Box Bracket Suport
25	68015892AA	1	2, 3, 6, 7	L		EG2, EXM	DGZ		COVER, Prefuse Box Cover
26	68015893AA	1	2, 3, 6, 7	L		EG2, EXM	DGZ		HOLDER, Fuse, Prefuse / Fuse Box
27	68015894AA	1	2, 3, 6, 7	L		EG2, EXM	DGZ		FUSE, Holder, Contact Rail / Prefuse Box
28									FUSE
	05104596AA	1	2, 3, 6, 7	L		EG2, EXM	DGZ		[200A]
	68011191AA	AR	2, 3, 6, 7	L		EG2, EXM	DGZ		[40A / F59]
	68011192AA	AR	2, 3, 6, 7	L		EXM, EG2	DGZ		[80A / F59]
	68011194AA	99	2, 3, 6, 7	L		EG2, EXM	DGZ		[150A / F59]
29	68025370AA	1	2, 3, 6, 7	L		EG2, EXM	DGZ		COVER, Fuse Box
30	06104566AA	2	2, 3, 6, 7	L		EG2, EXM	DGZ		SCREW, Tapping
31	06104709AA	2	2, 3, 6, 7	L	13, 15, 17, 53, 55	EG2, EXM	DGZ		NUT, Hex Flange, M8x1.25
32									LABEL, Warning
	05121112AA	1	2, 3, 6, 7	L	13, 15, 17, 53, 55	EG2	DGZ		
	68006926AA	1	2, 3, 6, 7	L		EXM	DGZ		
33	68004878AA	2	2, 3, 6, 7	L	13, 15, 17, 53, 55	EG2, EXM	DGZ		NUT
34	68011041AA	2	2, 3, 6, 7	L	53, 55	EG2, EXM	DGZ		POWER OUTLET
35									CONNECTOR
	68011235AA	1	2, 3, 6, 7	L		EG2, EXM	DGZ		[4 Pin: N28/1]
	68011247AA	1	2, 3, 6, 7	L		EG2, EXM	DGZ		[4 Pin: N28/1] Control Unit Trailer Recognition Connector
36	68011247AA	1	2, 3, 6, 7	L		EG2, EXM	DGZ		CONNECTOR, Terminal, Terminal / [0.75 - 1.0 MM2; SLK N28/1]

SPRINTER (VB)

SERIES	LINE	BODY	ENGINE	TRANSMISSION
L = LOWLINE	3 = HD DODGE 2WD 6 = Lt. Duty DODGE 4WD 2 = Med. Duty DODGE 2WD 7 = Med. Duty DODGE 4WD	17 = VAN WHEEL BASE 7 55 = WAGON WHEEL BASE 5 15 = VAN WHEEL BASE 5 53 = 119 WB 13 = 119 WB 05 = CAB CHASSIS WHEEL BASE 5 03 = CAB CHASSIS WHEEL BASE 3	EG2 = 3.5L V6 Gas Engine EXM = 3.0L V6 Turbo Diesel Engine	DGZ = 5-Speed Auto W5A380 Transmission

Fuse Block Fuses and Relays
Figure 8-510

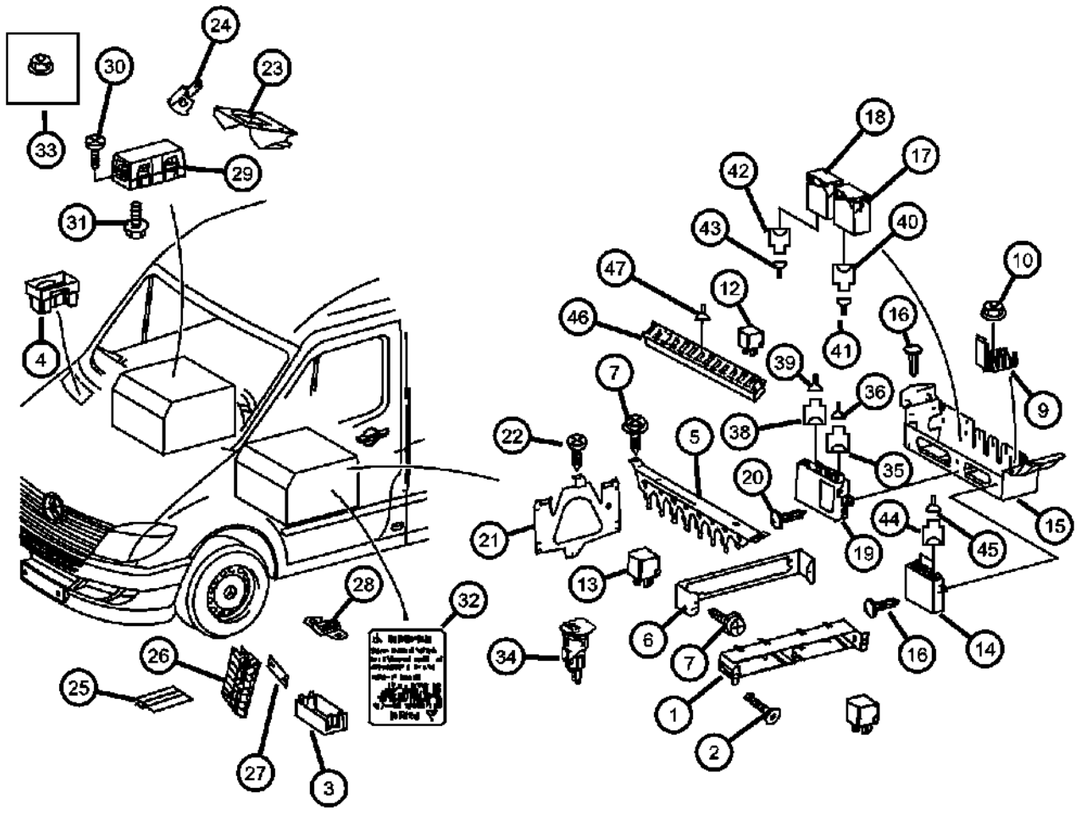

ITEM	PART NUMBER	QTY	LINE	SERIES	BODY	ENGINE	TRANS	TRIM	DESCRIPTION
-37	05143897AA	AR	2, 3, 6, 7	L		EG2, EXM	DGZ		TERMINAL, [1.5 - 2.5 MM2; SLK; N28/1]
38	68011195AA	1	2, 3, 6, 7	L		EG2, EXM	DGZ		CONNECTOR, [8 Pin; N28/1] Control Unit Recognition Connector
39	05103873AA	3	2, 3, 6, 7	L	13, 15, 17, 53, 55	EG2, EXM	DGZ		TERMINAL, [0.75 MM2 MQS; N28/1]
40	68011399AA	1	2, 3, 6, 7	L		EG2, EXM	DGZ		CONNECTOR
41									TERMINAL
	05103892AA	1	2, 3, 6, 7	L		EG2, EXM	DGZ		[0.5 - 1.0 MM2 MCP; N9/1]
	05103893AA	AR	2, 3, 6, 7	L		EG2, EXM	DGZ		[1.5 - 2.5 MM2 MCP; N9/1]
42	68011083AA	1	2, 3, 6, 7	L		EG2, EXM	DGZ		CONNECTOR
43	05103873AA	AR	2, 3, 6, 7	L		EG2, EXM	DGZ		TERMINAL, [0.75 MM2 MQS; N71]
44	68011399AA	1	2, 3, 6, 7	L		EG2, EXM	DGZ		CONNECTOR
45									TERMINAL
	05103882AA	1	2, 3, 6, 7	L					[0.5 - 1.0 MM2 MCP; N26/15]
	05103893AA	AR	2, 3, 6, 7	L		EG2, EXM	DGZ		[1.5 - 2.5 MM2 MCP; N26/15]
46	05120374AA	1	2, 3, 6, 7	L		EG2, EXM	DGZ		CONNECTOR, Relay Support
47									TERMINAL, Female
	05133362AA	AR	2, 3, 6, 7	L		EG2, EXM	DGZ		[1 - 2.5 MM2; K100/1]
	05133360AA	AR	2, 3, 6, 7	L		EG2, EXM	DGZ		[K100/1]

SPRINTER (VB)

SERIES	LINE	BODY	ENGINE	TRANSMISSION
L = LOWLINE	3 = HD DODGE 2WD 6 = Lt. Duty DODGE 4WD 2 = Med. Duty DODGE 2WD 7 = Med. Duty DODGE 4WD	17 = VAN WHEEL BASE 7 55 = WAGON WHEEL BASE 5 15 = VAN WHEEL BASE 5 53 = 119 WB 13 = 119 WB 05 = CAB CHASSIS WHEEL BASE 5 03 = CAB CHASSIS WHEEL BASE 3	EG2 = 3.5L V6 Gas Engine EXM = 3.0L V6 Turbo Diesel Engine	DGZ = 5-Speed Auto W5A380 Transmission

AR = use ase required - = Non illustrrated part

<< RETURN TO GROUP INDEX

Sensors, Gas Engine
Figure 8-605

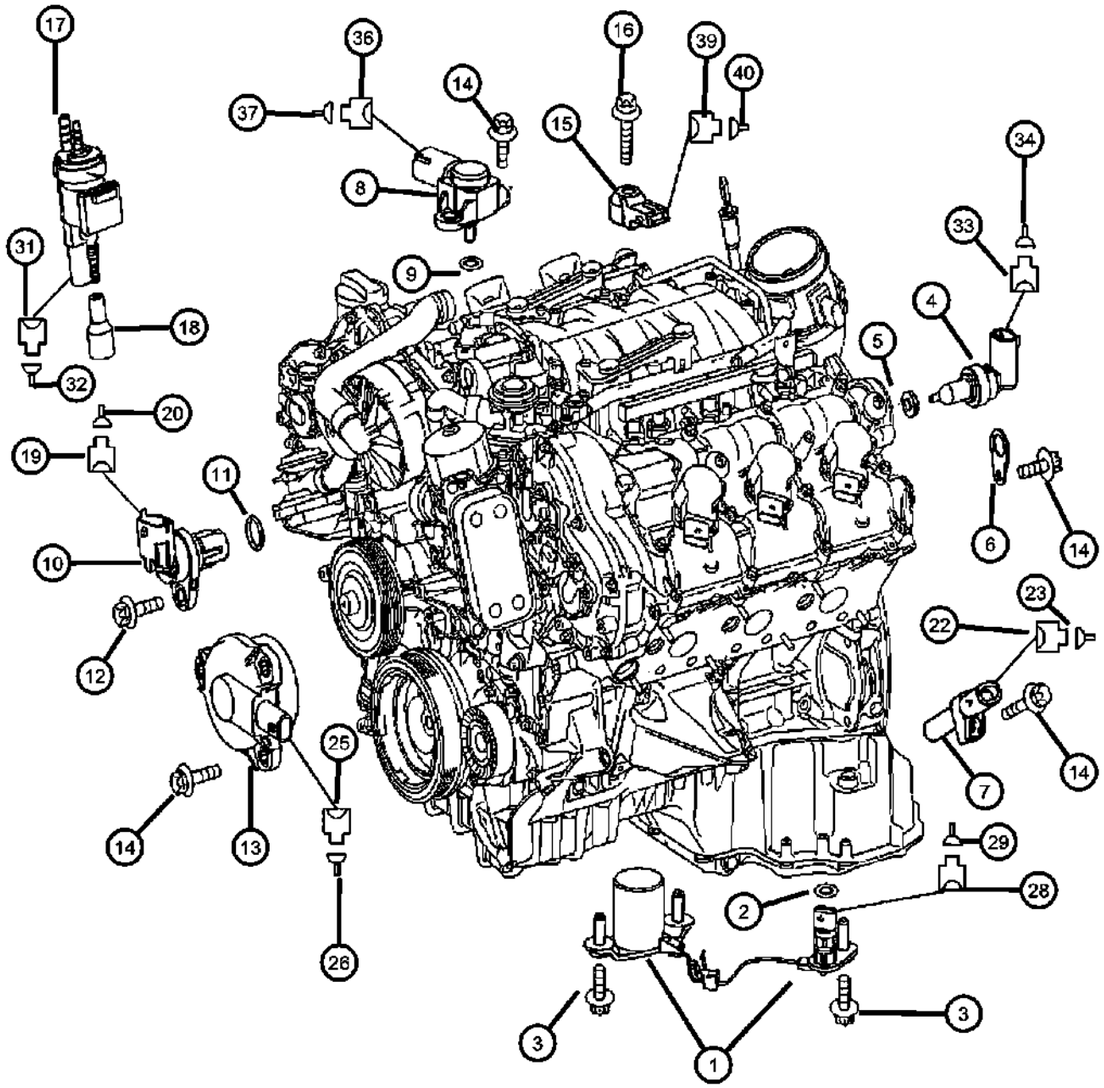

ITEM	PART NUMBER	QTY	LINE	SERIES	BODY	ENGINE	TRANS	TRIM	DESCRIPTION
1	05175760AA	1	2, 3, 6, 7	L		EG2, EXM	DGZ		SENSOR, Oil Level
2	05175761AA	1	2, 3, 6, 7	L		EG2	DGZ		O RING
3	06104682AA	2	2, 3, 6, 7	L		EG2	DGZ		BOLT, Oil Lever Contactor To Oil Pan & Plug To Oil Pan [M6x19]
4	05175764AA	1	2, 3, 6, 7	L		EG2, EXM	DGZ		SENSOR, Air Temperature
5	05080148AA	1	2, 3, 6, 7	L		EG2	DGZ		O RING
6	68011850AA	1	2, 3, 6, 7	L		EG2	DGZ		BRACKET
7	05175763AA	1	2, 3, 6, 7	L		EG2, EXM	DGZ		SENSOR, Crankshaft Position
8	05101120AB	1	2, 3, 6, 7	L		EG2	DGZ		SENSOR, Air Pressure, Cylinder Cover, Right
9	05101160AA	1	2, 3, 6, 7	L		EG2	DGZ		O RING
10	05137706AA	4	2, 3, 6, 7	L		EG2	DGZ		SENSOR, Camshaft, Cylinder Cover, Left
11	05101153AA	4	2, 3, 6, 7	L		EG2	DGZ		O RING
12	06104076AA	4	2, 3, 6, 7	L		EG2	DGZ		BOLT, Torx, M6X1.00X16.00
13	68011851AA	4	2, 3, 6, 7	L		EG2	DGZ		ADJUSTER, Camshaft Adjuster
14	06104142AA	1	2, 3, 6, 7	L		EG2	DGZ		SCREW, Pan Head, M6x1.00x16.00, Sensor To Engine [M6x16]
15	68011852AA	2	2, 3, 6, 7	L		EG2	DGZ		SENSOR, Knock
16	06104089AA	2	2, 3, 6, 7	L		EG2	DGZ		BOLT
17	05099822AA	1	2, 3, 6, 7	L		EG2	DGZ		SOLENOID, Vacuum
18	05097188AA	1	2, 3, 6, 7	L		EG2	DGZ		BOOT, Air Injection Valve
19									CONNECTOR
	05138030AA	4	2, 3, 6, 7	L		EG2	DGZ		Hall Type Sensor Camshaft [3 PIN ; B6/4 - B6/7]
	05143908AA	4	2, 3, 6, 7	L		EG2	DGZ		Hall Type Sensor Camshaft [B6/4 - B6/7]
20	05133353AA	AR	2, 3, 6, 7	L		EG2	DGZ		TERMINAL, [0.5 - 1.0 MM2; B6/4 - B6/7]
-21	05103663AA	AR	2, 3, 6, 7	L		EG2	DGZ		GROMMET, [0.25 - 1.0 MMS; B6/4 - B6/7]
22									CONNECTOR
	05138030AA	1	2, 3, 6, 7	L		EG2	DGZ		[3 Pin L5]
	05143908AA	1	2, 3, 6, 7	L		EG2	DGZ		[L5]
23	05133353AA	AR	2, 3, 6, 7	L		EG2	DGZ		TERMINAL, [0.5 - 1.0 MM2; L5]
-24	05103663AA	AR	2, 3, 6, 7	L		EG2	DGZ		GROMMET, [0.25 - 1.0 MM2; L5]

SPRINTER (VB)

SERIES	LINE	BODY	ENGINE	TRANSMISSION
L = LOWLINE	3 = HD DODGE 2WD 6 = Lt. Duty DODGE 4WD 2 = Med. Duty DODGE 2WD 7 = Med. Duty DODGE 4WD	17 = VAN WHEEL BASE 7 55 = WAGON WHEEL BASE 5 15 = VAN WHEEL BASE 5 53 = 119 WB 13 = 119 WB 05 = CAB CHASSIS WHEEL BASE 5 03 = CAB CHASSIS WHEEL BASE 3	EG2 = 3.5L V6 Gas Engine EXM = 3.0L V6 Turbo Diesel Engine	DGZ = 5-Speed Auto W5A380 Transmission

AR = use ase required - = Non illustrrated part

<< RETURN TO GROUP INDEX

Sensors, Gas Engine
Figure 8-605

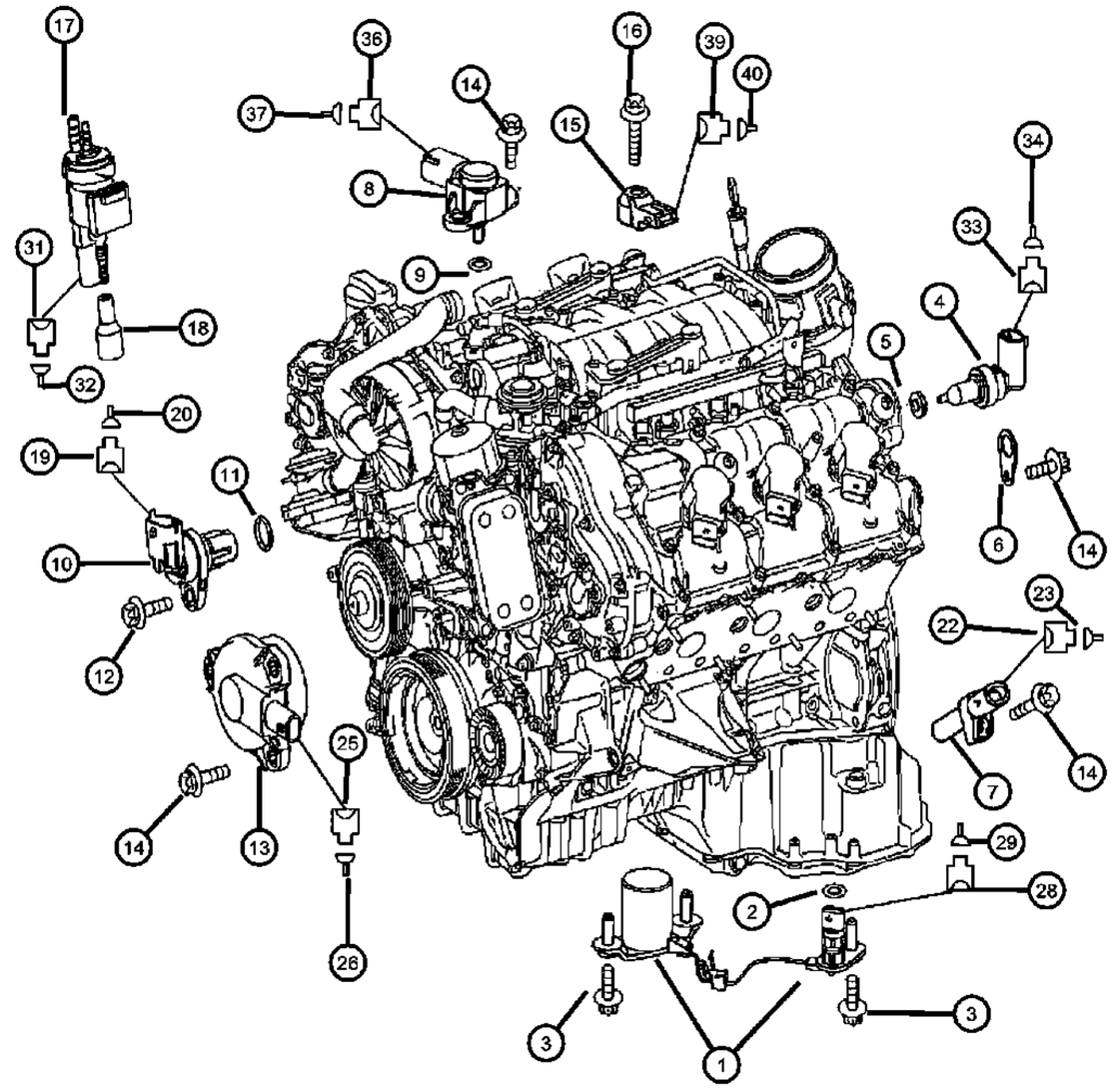

ITEM	PART NUMBER	QTY	LINE	SERIES	BODY	ENGINE	TRANS	TRIM	DESCRIPTION
25	68011798AA	4	2, 3, 6, 7	L		EG2	DGZ		CONNECTOR, [Y49/4 - Y49/7]
26	68011877AA	AR	2, 3, 6, 7	L		EG2	DGZ		TERMINAL, [Y49/4 - Y49-7]
-27	68011050AA	AR	2, 3, 6, 7	L		EG2	DGZ		GASKET, [Y49/4 - Y49/7]
28	68011243AA	1	2, 3, 6, 7	L		EG2	DGZ		CONNECTOR, Oil Lever Sending Unit [S43]
29	68011878AA	AR	2, 3, 6, 7	L		EG2, EXM	DGZ		TERMINAL, [0.22 - 0.5 MM2; S43]
-30	68011050AA	AR	2, 3, 6, 7	L		EG2	DGZ		GASKET, Oil Sending Unit [S43]
31	05120277AA	1	2, 3, 6, 7	L		EG2, EXM	DGZ		CONNECTOR, Wiring Repair, [2 Pin: Y59/2]
32	05138861AA	AR	2, 3, 6, 7	L		EG2, EXM	DGZ		TERMINAL
33	05120277AA	1	2, 3, 6, 7	L		EG2, EXM	DGZ		CONNECTOR, Wiring Repair, [2 Pin; B11/4]
34	05138861AA	AR	2, 3, 6, 7	L		EG2, EXM	DGZ		TERMINAL
-35	05120859AA	99	2, 3, 6, 7	L		EG2	DGZ		GASKET, [0.9 - 1.3; MM2 B11/4]
36	05120278AA	1	2, 3, 6, 7	L		EG2, EXM	DGZ		CONNECTOR
37	05138861AA	AR	2, 3, 6, 7	L		EG2, EXM	DGZ		TERMINAL
-38	05120859AA	99	2, 3, 6, 7	L		EG2	DGZ		GASKET, [0.9 - 1.3 MM2; B28]
39	05143904AA	2	2, 3, 6, 7	L		EG2	DGZ		CONNECTOR, [2 Pin, A16/1, A16/2]
40	05133353AA	AR	2, 3, 6, 7	L		EG2	DGZ		TERMINAL, [0.5 - 1.0 MM2, A16/1 / A16/2]
-41	05103663AA	AR	2, 3, 6, 7	L		EG2	DGZ		GROMMET, [0.25 - 1.0 MM2; A16/1 A16/2]
-42	05159404AA	1	2, 3, 6, 7	L		EG2	DGZ		STRAP, Ground

SPRINTER (VB)

SERIES	LINE	BODY	ENGINE	TRANSMISSION
L = LOWLINE	3 = HD DODGE 2WD 6 = Lt. Duty DODGE 4WD 2 = Med. Duty DODGE 2WD 7 = Med. Duty DODGE 4WD	17 = VAN WHEEL BASE 7 55 = WAGON WHEEL BASE 5 15 = VAN WHEEL BASE 5 53 = 119 WB 13 = 119 WB 05 = CAB CHASSIS WHEEL BASE 5 03 = CAB CHASSIS WHEEL BASE 3	EG2 = 3.5L V6 Gas Engine EXM = 3.0L V6 Turbo Diesel Engine	DGZ = 5-Speed Auto W5A380 Transmission

AR = use ase required - = Non illustrrated part

Sensors Diesel Engine
Figure 8-610

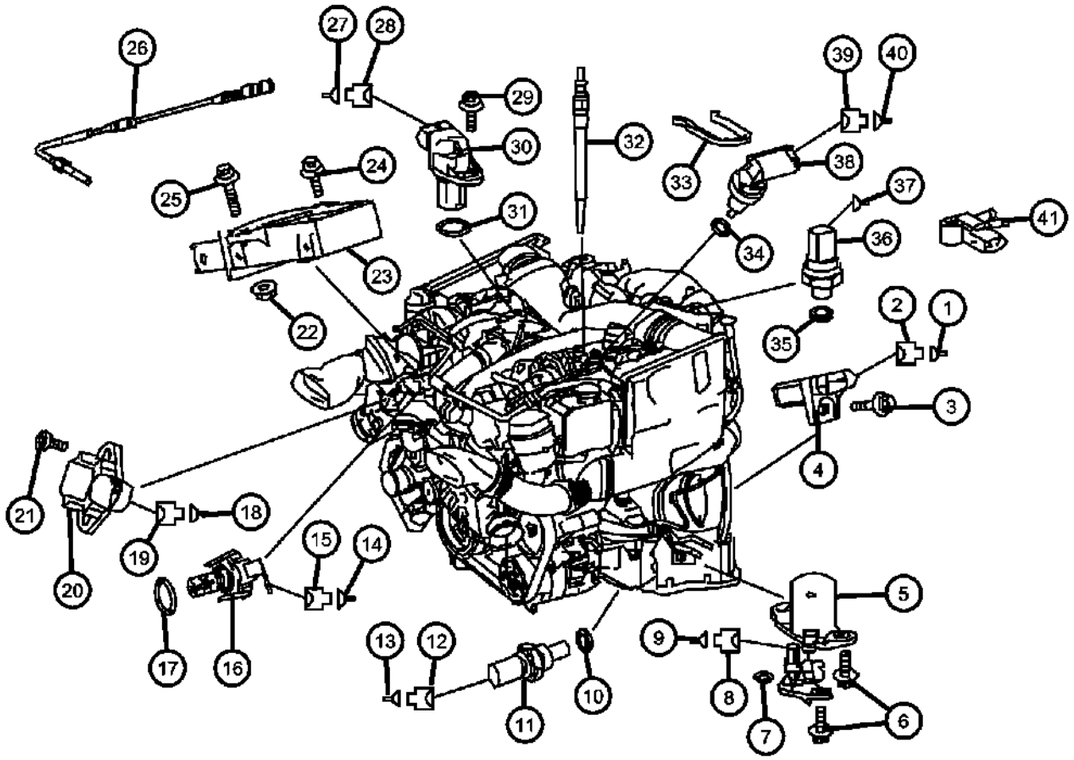

ITEM	PART NUMBER	QTY	LINE	SERIES	BODY	ENGINE	TRANS	TRIM	DESCRIPTION
1	05133353AA	AR	2, 3, 6, 7	L		EXM	DGZ		TERMINAL, [0.25 - 0.50 MM2;L5]
2	05138030AA	4	2, 3, 6, 7	L		EXM	DGZ		CONNECTOR, [3 Pin L5]
3	05179387AA	1	2, 3, 6, 7	L		EXM	DGZ		SCREW, Sender Unit to Cylinder Crankcase [6x16]
4	05175763AA	1	2, 3, 6, 7	L		EG2, EXM	DGZ		SENSOR, Crankshaft Position
5	05137394AB	1	2, 3, 6, 7	L		EXM	DGZ		SENSOR, Oil Level
6	06104682AA	3	2, 3, 6, 7	L		EXM	DGZ		BOLT, Sender Unit To Oil Pan [M6x19]
7	05103567AA	1	2, 3, 6, 7	L		EXM	DGZ		SEAL RING
8	05120278AA	1	2, 3, 6, 7	L		EG2, EXM	DGZ		CONNECTOR
9	68011878AA	AR	2, 3, 6, 7	L		EG2, EXM	DGZ		TERMINAL, [0.22 - 0.5 MM2;S43]
10	06507454AA	1	2, 3, 6, 7	L		EXM	DGZ		SEAL
11	05103534AB	1	2, 3, 6, 7	L		EXM	DGZ		SENDING UNIT, Temperature Gauge
12	05120277AA	1	2, 3, 6, 7	L		EG2, EXM	DGZ		CONNECTOR, Wiring Repair
13	05138861AA	AR	2, 3, 6, 7	L		EG2, EXM	DGZ		TERMINAL, [0.5 MM2 MQS; B 1]
14	05138861AA	AR	2, 3, 6, 7	L		EG2, EXM	DGZ		TERMINAL, [0.5 MM2 MQS; B17]
15	05120277AA	1	2, 3, 6, 7	L		EG2, EXM	DGZ		CONNECTOR, Wiring Repair, Intake Air Temperature Sensor 2-PIN;B17
16	04862635AA	1	2, 3, 6, 7	L		EXM	DGZ		SENSOR, Temperature
17	05179491AA	1	2, 3, 6, 7	L		EXM	DGZ		O RING, [11x2.0MM]
18	05138861AA	AR	2, 3, 6, 7	L		EG2, EXM	DGZ		TERMINAL, [.5 MM2 MQS]
19	05120278AA	1	2, 3, 6, 7	L		EG2, EXM	DGZ		CONNECTOR, [3 PIN]
20	05117545AB	1	2, 3, 6, 7	L		EXM	DGZ		SENSOR, MAP
21	06104649AB	2	2, 3, 6, 7	L	13, 15, 17	EG2, EXM	DGZ		SCREW, Pressure Sensor Attachment [K60x16]
22	05097674AA	1	2, 3, 6, 7	L		EXM	DGZ		NUT, Hex
23	68013182AA	1	2, 3, 6, 7	L		EXM	DGZ		MODULE, Glow Plug
24	06104005AA	4	2, 3, 6, 7	L		EXM	DGZ		BOLT, 6 Lobe External Head, M6X1.00X16.00, Bracket to Cylinder Head M6x16
25	06104012AA	1	2, 3, 6, 7	L		EXM	DGZ		SCREW, Torx, M6X1.00X50
26	68014084AA	1	2, 3, 6, 7	L		EXM	DGZ		SENSOR, Temperature
27	05133353AA	AR	2, 3, 6, 7	L		EXM	DGZ		TERMINAL, [0.25 - 0.5 MM2; B6/1]
28	05138030AA	4	2, 3, 6, 7	L		EXM	DGZ		CONNECTOR, [3 PIN; B6/1]

SPRINTER (VB)

SERIES	LINE	BODY	ENGINE	TRANSMISSION
L = LOWLINE	3 = HD DODGE 2WD 6 = Lt. Duty DODGE 4WD 2 = Med. Duty DODGE 2WD 7 = Med. Duty DODGE 4WD	17 = VAN WHEEL BASE 7 55 = WAGON WHEEL BASE 5 15 = VAN WHEEL BASE 5 53 = 119 WB 13 = 119 WB 05 = CAB CHASSIS WHEEL BASE 5 03 = CAB CHASSIS WHEEL BASE 3	EG2 = 3.5L V6 Gas Engine EXM = 3.0L V6 Turbo Diesel Engine	DGZ = 5-Speed Auto W5A380 Transmission

AR = use ase required - = Non illustrrated part

<< RETURN TO GROUP INDEX

Sensors Diesel Engine
Figure 8-610

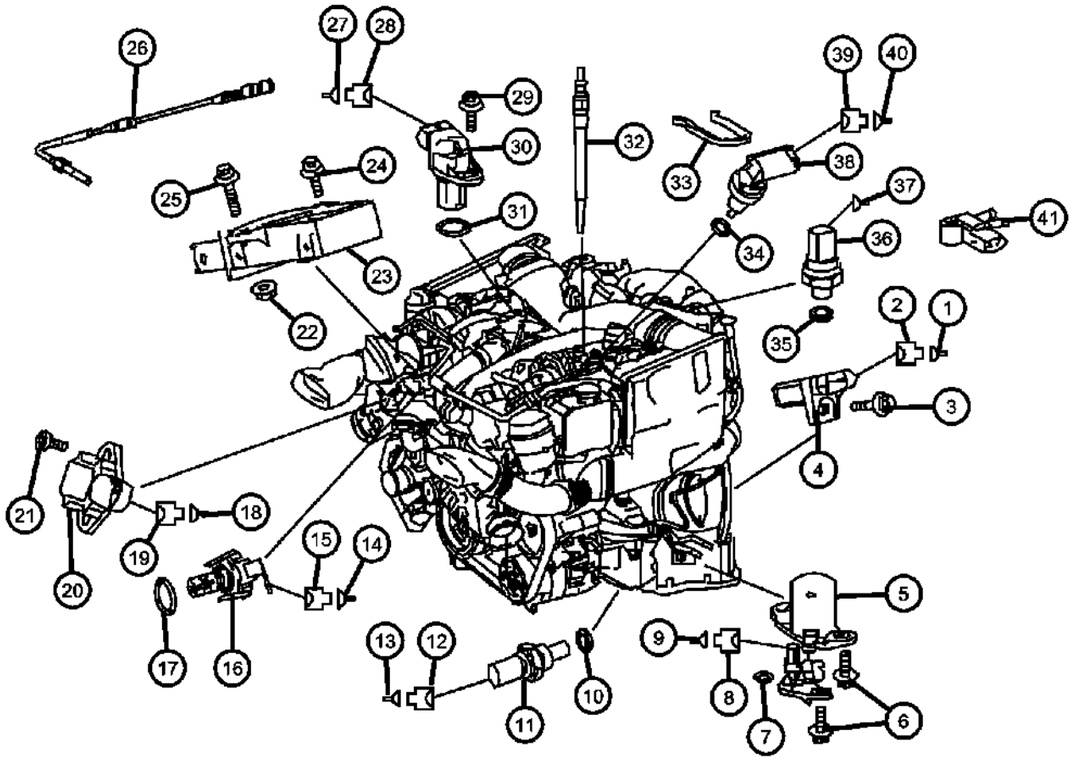

ITEM	PART NUMBER	QTY	LINE	SERIES	BODY	ENGINE	TRANS	TRIM	DESCRIPTION
29	06104682AA	1	2, 3, 6, 7	L		EXM	DGZ		BOLT, [M6x19]
30	05175762AA	1	2, 3, 6, 7	L		EXM	DGZ		SENSOR, Camshaft
31	05183535AA	1	2, 3, 6, 7	L		EXM	DGZ		O RING
32	05175756AA	6	2, 3, 6, 7	L		EXM	DGZ		GLOW PLUG
33	05080149AA	1	2, 3, 6, 7	L		EXM	DGZ		CLIP
34	05080148AA	1	2, 3, 6, 7	L		EXM	DGZ		O RING
35	05104683AB	1	2, 3, 6, 7	L		EXM	DGZ		O RING, Pressure Sensor
36	05175812AA	1	2, 3, 6, 7	L		EXM	DGZ		SENSOR, Pressure, Exhaust Back Pressure
37	05138861AA	AR	2, 3, 6, 7	L		EG2, EXM	DGZ		TERMINAL, [MM2 MQS B60]
38	05175764AA	1	2, 3, 6, 7	L		EG2, EXM	DGZ		SENSOR, Air Temperature, Cooling Water
39	05120277AA	1	2, 3, 6, 7	L		EG2, EXM	DGZ		CONNECTOR, Wiring Repair, Refrigerant Temperature Sensor 2-PIN
40	05138861AA	AR	2, 3, 6, 7	L		EG2, EXM	DGZ		TERMINAL, [0.5 MM2 MQS; B 11/4]
41	68012053AA	1	2, 3, 6, 7	L		EXM	DGZ		SENSOR, Pressure, Air Cleaner Maintenance Indication

SPRINTER (VB)

SERIES	LINE	BODY	ENGINE	TRANSMISSION
L = LOWLINE	3 = HD DODGE 2WD 6 = Lt. Duty DODGE 4WD 2 = Med. Duty DODGE 2WD 7 = Med. Duty DODGE 4WD	17 = VAN WHEEL BASE 7 55 = WAGON WHEEL BASE 5 15 = VAN WHEEL BASE 5 53 = 119 WB 13 = 119 WB 05 = CAB CHASSIS WHEEL BASE 5 03 = CAB CHASSIS WHEEL BASE 3	EG2 = 3.5L V6 Gas Engine EXM = 3.0L V6 Turbo Diesel Engine	DGZ = 5-Speed Auto W5A380 Transmission

AR = use ase required - = Non illustrrated part

<< RETURN TO GROUP INDEX

Sensors Brakes
Figure 8-625

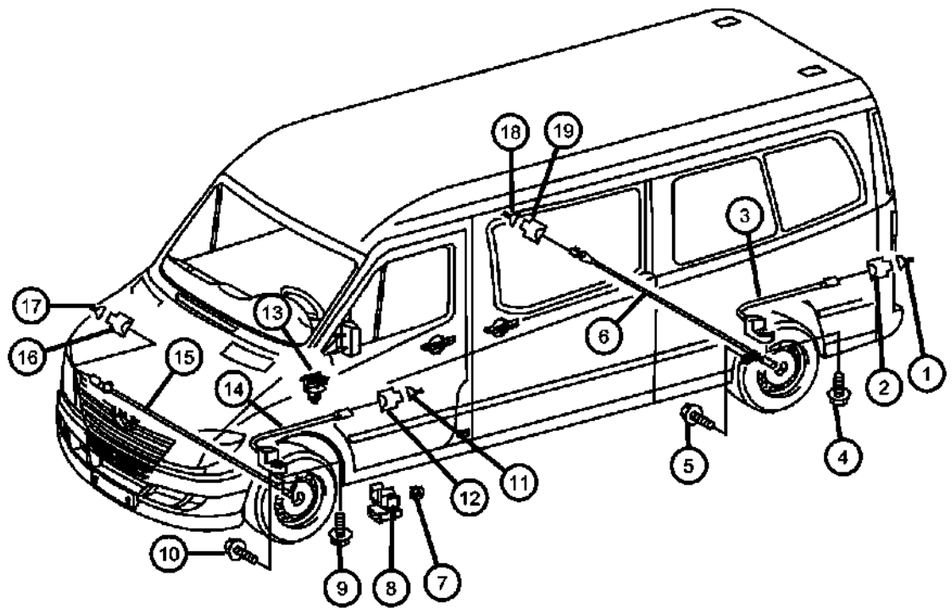

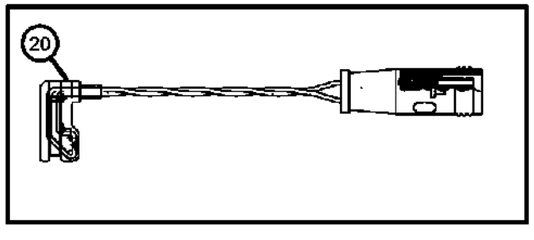

ITEM	PART NUMBER	QTY	LINE	SERIES	BODY	ENGINE	TRANS	TRIM	DESCRIPTION
1	05103874AA	1	2, 3, 6, 7	L		EG2, EXM	DGZ		TERMINAL
2	68011299AA	4	2, 3, 6, 7	L		EG2, EXM	DGZ		CONNECTOR, Rear Axle Brake Lining Wear Indicator 2-PIN;X88/15;X88/16
3									WIRING, Brake Indicator
	68013838AA	2	2, 6	L		EG2, EXM	DGZ		On Rear Axle
	68013839AA	2	3, 7	L		EG2, EXM	DGZ		On Rear Axle
4	06104076AA	2	2, 3, 6, 7	L		EG2, EXM	DGZ		BOLT, Torx, M6X1.00X16.00, Fastening Sensor to Rear Axle M6x16
5	06104076AA	2	2, 3, 6, 7	L		EG2, EXM	DGZ		BOLT, Torx, M6X1.00X16.00, Sensor to Rear Axle M6x16
6									SENSOR, Wheel Speed
	68013831AA	1	3, 7	L	03, 05, 13, 15, 17	EG2, EXM	DGZ		Rear Left
	68013832AA	1	2, 6	L	13, 15, 17, 53, 55	EG2, EXM	DGZ		Rear, Right
	68013833AA	1	3, 7	L	03, 05, 13, 15, 17	EG2, EXM	DGZ		Rear, Right
	68013830AA	1	2, 6	L	13, 15, 17, 53, 55	EG2, EXM	DGZ		Rear Left
7									NUT, Hex
	05097674AA	2	3, 7	L	03, 05	EG2, EXM	DGZ		Fastening Bracket Left M6
		2	2, 3, 6, 7	L	13, 15, 17, 53, 55	EG2, EXM	DGZ		Fastening Bracket Left M6
8	68013737AA	4	2, 3, 6, 7	L		EG2, EXM	DGZ		BRACKET, Cable Harness to Support
9	06104076AA	2	2, 3, 6, 7	L		EG2, EXM	DGZ		BOLT, Torx, M6X1.00X16.00, Fastening Sensor to Rear Axle M6x16
10	06104076AA	2	2, 3, 6, 7	L		EG2, EXM	DGZ		BOLT, Torx, M6X1.00X16.00, Fastening Sensor to Front Axle M6x16
11	05103874AA	1	2, 3, 6, 7	L		EG2, EXM	DGZ		TERMINAL
12	68011299AA	4	2, 3, 6, 7	L		EG2, EXM	DGZ		CONNECTOR, Front Axle Brake Lining Wear Indicator 2-PIN;X88/13;X88/14
13									CLIP, Retainer
	68013413AA	1	2, 3, 6, 7	L	13, 15, 17, 53, 55	EG2, EXM	DGZ		
		1	3, 7	L	03, 05	EG2, EXM	DGZ		

SPRINTER (VB)

SERIES	LINE	BODY	ENGINE	TRANSMISSION
L = LOWLINE	3 = HD DODGE 2WD 6 = Lt. Duty DODGE 4WD 2 = Med. Duty DODGE 2WD 7 = Med. Duty DODGE 4WD	17 = VAN WHEEL BASE 7 55 = WAGON WHEEL BASE 5 15 = VAN WHEEL BASE 5 53 = 119 WB 13 = 119 WB 05 = CAB CHASSIS WHEEL BASE 5 03 = CAB CHASSIS WHEEL BASE 3	EG2 = 3.5L V6 Gas Engine EXM = 3.0L V6 Turbo Diesel Engine	DGZ = 5-Speed Auto W5A380 Transmission

Sensors Brakes
Figure 8-625

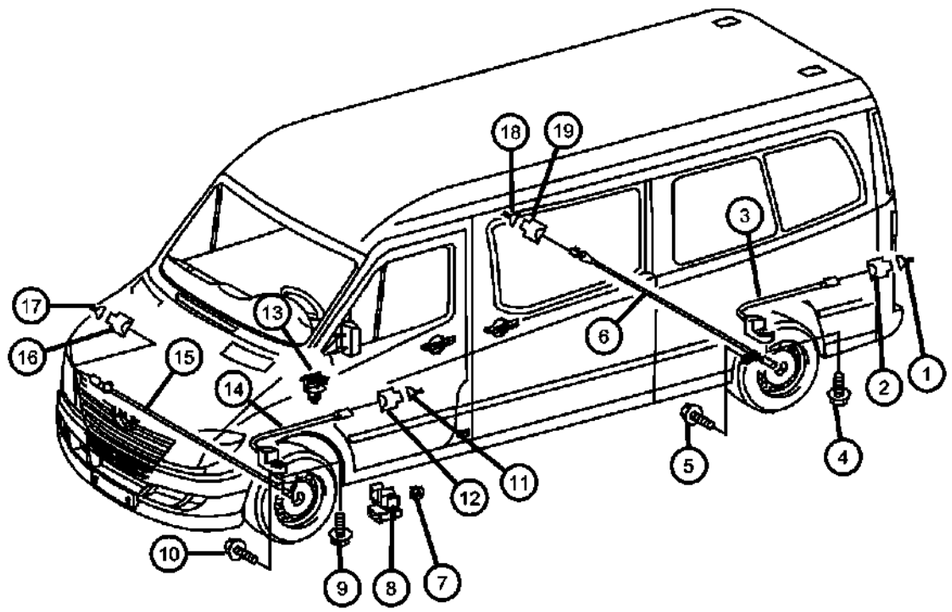

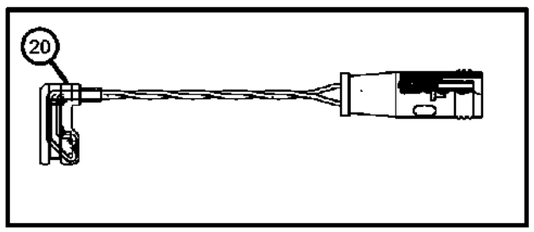

ITEM	PART NUMBER	QTY	LINE	SERIES	BODY	ENGINE	TRANS	TRIM	DESCRIPTION
14	68013736AA	2	2, 3, 6, 7	L		EG2, EXM	DGZ		WIRING, Brake Indicator, Front Axle Brake Lining Wear Indicator
15	68013735AA	2	2, 3, 6, 7	L		EG2, EXM	DGZ		SENSOR, Wheel Speed, Front Axle
16	05120277AA	1	2, 3, 6, 7	L		EG2, EXM	DGZ		CONNECTOR, Wiring Repair, Left Front RPM Sensor Connector 2-PIN;X62/26;X62/27
17	05103874AA	1	2, 3, 6, 7	L		EG2, EXM	DGZ		TERMINAL
18	05103874AA	1	2, 3, 6, 7	L		EG2, EXM	DGZ		TERMINAL
19	05120277AA	1	2, 3, 6, 7	L		EXM, EG2	DGZ		CONNECTOR, Wiring Repair
20									SENSOR, Brake wear
	68006717AA	4	3, 7	L	03, 05, 13, 15, 17	EG2, EXM	DGZ		[3500] Only / Front & Rear Brake Wear Sensors, Front And Rear
		2	2, 6	L	13, 15, 17, 53, 55	EG2, EXM	DGZ		[2500] Series Front Brake Wear Sensor, Front
	68013762AA	4	2, 6	L	13, 15, 17, 53, 55	EG2, EXM	DGZ		[2500] Only / Rear Brake Wear Sensors, Rear

SPRINTER (VB)

SERIES	LINE	BODY	ENGINE	TRANSMISSION
L = LOWLINE	3 = HD DODGE 2WD 6 = Lt. Duty DODGE 4WD 2 = Med. Duty DODGE 2WD 7 = Med. Duty DODGE 4WD	17 = VAN WHEEL BASE 7 55 = WAGON WHEEL BASE 5 15 = VAN WHEEL BASE 5 53 = 119 WB 13 = 119 WB 05 = CAB CHASSIS WHEEL BASE 5 03 = CAB CHASSIS WHEEL BASE 3	EG2 = 3.5L V6 Gas Engine EXM = 3.0L V6 Turbo Diesel Engine	DGZ = 5-Speed Auto W5A380 Transmission

Sensor Body
Figure 8-635

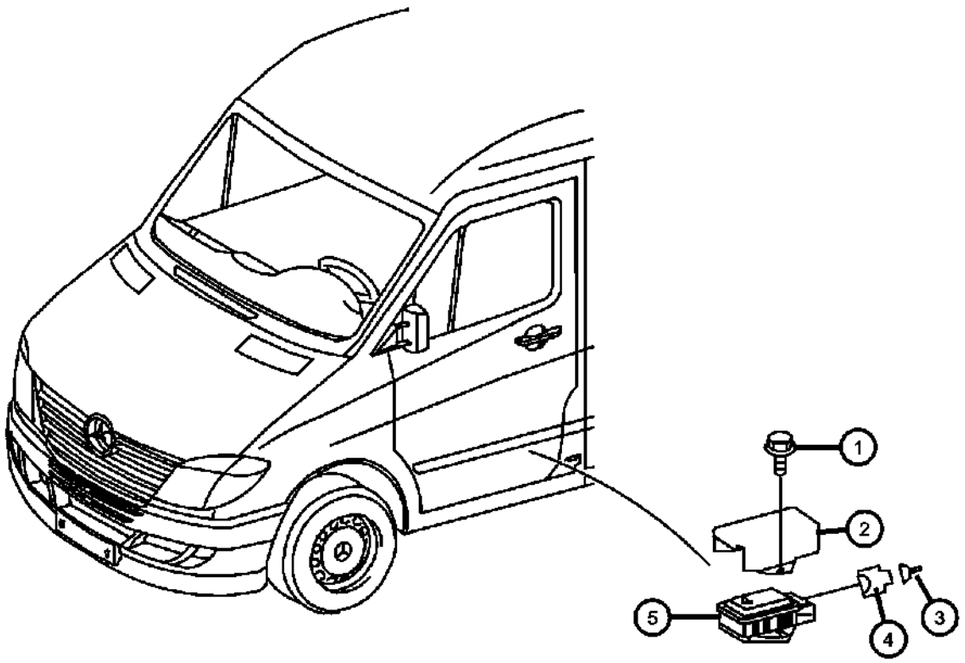

ITEM	PART NUMBER	QTY	LINE	SERIES	BODY	ENGINE	TRANS	TRIM	DESCRIPTION
1									SCREW, Pan Head, M6x1.00x16.00
	06104142AA	2	3, 7	L	03, 05	EG2, EXM	DGZ		
		2	2, 3, 6, 7	L	13, 15, 17, 53, 55	EG2, EXM	DGZ		
2	05129653AA	1	2, 3, 6, 7	L		EG2, EXM	DGZ		COVER, Fuseblock, Turn Rate Sensor
3									TERMINAL
	05103873AA	3	3, 7	L	03, 05	EG2, EXM	DGZ		0.75 MM2,MQS;B24/15
		3	2, 3, 6, 7	L	13, 15, 17, 53, 55	EG2, EXM	DGZ		0.75 MM2,MQS;B24/15
4	68011286AA	1	2, 3, 6, 7	L		EG2, EXM	DGZ		CONNECTOR, Turn Rate Sensor 4-PIN,B24/15
5	68013423AA	1	2, 3, 6, 7	L		EG2, EXM	DGZ		SENSOR, Yaw Rate, Turn Rate Sensor

SPRINTER (VB)

SERIES	LINE	BODY	ENGINE	TRANSMISSION
L = LOWLINE	3 = HD DODGE 2WD 6 = Lt. Duty DODGE 4WD 2 = Med. Duty DODGE 2WD 7 = Med. Duty DODGE 4WD	17 = VAN WHEEL BASE 7 55 = WAGON WHEEL BASE 5 15 = VAN WHEEL BASE 5 53 = 119 WB 13 = 119 WB 05 = CAB CHASSIS WHEEL BASE 5 03 = CAB CHASSIS WHEEL BASE 3	EG2 = 3.5L V6 Gas Engine EXM = 3.0L V6 Turbo Diesel Engine	DGZ = 5-Speed Auto W5A380 Transmission

Sensors Temperature
Figure 8-645

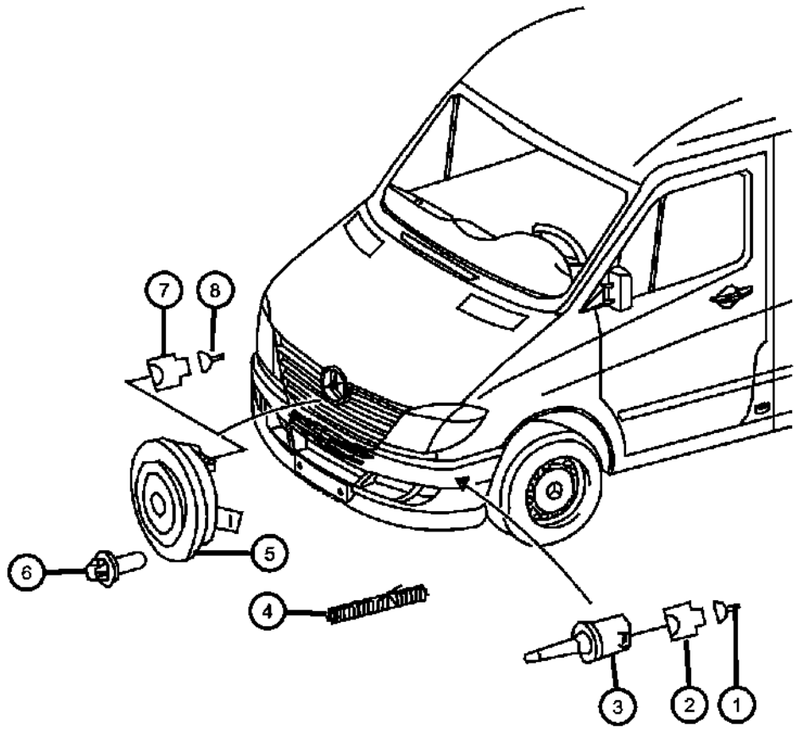

ITEM	PART NUMBER	QTY	LINE	SERIES	BODY	ENGINE	TRANS	TRIM	DESCRIPTION
1	05103873AA	AR	2, 3, 6, 7	L		EG2, EXM	DGZ		TERMINAL, 0.75 MM2,MQS;B14
2	05120277AA	1	2, 3, 6, 7	L		EG2, EXM	DGZ		CONNECTOR, Wiring Repair, Sensor of Outside Temperature Indicator 2-PIN,B14
3									SENSOR, Ambient Temperature
	05101096AA	1	3, 7	L	03, 05	EG2, EXM	DGZ		Outboard Temperature Feeler
		1	2, 3, 6, 7	L	13, 15, 17, 53, 55	EG2, EXM	DGZ		Outboard Temperature Feeler
4	05133388AA	1	2, 3, 6, 7	L		EG2, EXM	DGZ		TUBE, Heat Shrink, H1,H18,H18/1
5									HORN
	05120370AA	1	3, 7	L	03, 05	EG2, EXM	DGZ		
		1	2, 3, 6, 7	L	13, 15, 17, 53, 55	EG2, EXM	DGZ		
6									SCREW
	05073723AB	2	3, 7	L	03, 05	EG2, EXM	DGZ		Horn Mounting M8x20
		6	2, 3, 6, 7	L	13, 15, 17, 53, 55	EG2, EXM	DGZ		Horn Mounting M8x20
7	05166277AA	1	2, 3, 6, 7	L		EG2, EXM	DGZ		CONNECTOR, 2-PIN,H1
8	68011404AA	AR	2, 3, 6, 7	L		EG2, EXM	DGZ		TERMINAL, H1

SPRINTER (VB)

SERIES	LINE	BODY	ENGINE	TRANSMISSION
L = LOWLINE	3 = HD DODGE 2WD 6 = Lt. Duty DODGE 4WD 2 = Med. Duty DODGE 2WD 7 = Med. Duty DODGE 4WD	17 = VAN WHEEL BASE 7 55 = WAGON WHEEL BASE 5 15 = VAN WHEEL BASE 5 53 = 119 WB 13 = 119 WB 05 = CAB CHASSIS WHEEL BASE 5 03 = CAB CHASSIS WHEEL BASE 3	EG2 = 3.5L V6 Gas Engine EXM = 3.0L V6 Turbo Diesel Engine	DGZ = 5-Speed Auto W5A380 Transmission

AR = use ase required - = Non illustrrated part

<< RETURN TO GROUP INDEX

Switches Instrument Panel
Figure 8-805

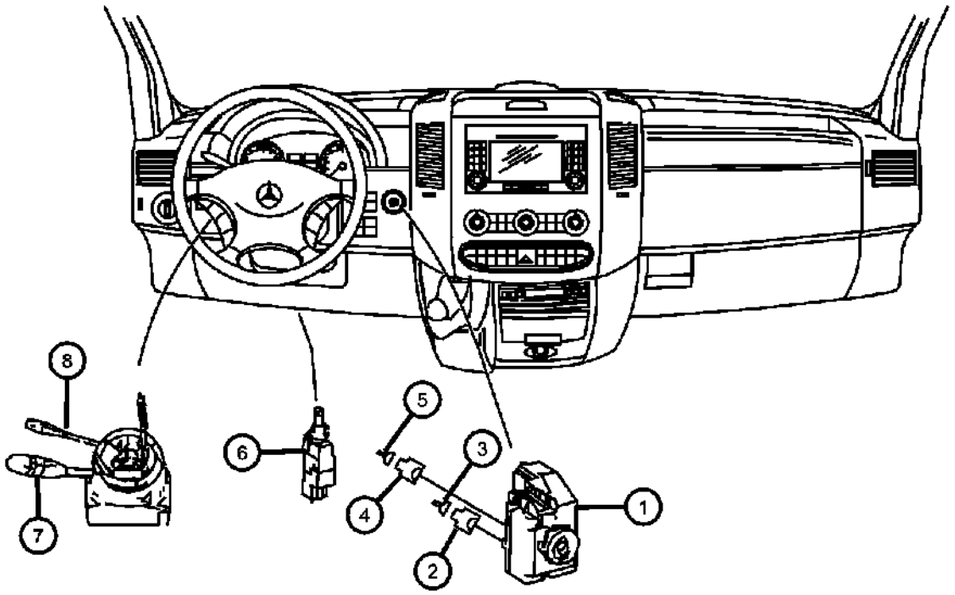

ITEM	PART NUMBER	QTY	LINE	SERIES	BODY	ENGINE	TRANS	TRIM	DESCRIPTION
1	68023969AA	1	2, 3, 6, 7	L		EG2, EXM	DGZ		CYLINDER, Ignition Lock
2									CONNECTOR
	68011195AA	1	2, 3, 6, 7	L		EG2, EXM	DGZ		Ignition Starter Switch Black 8-PIN;N73
	68011198AA	1	2, 3, 6, 7	L		EG2, EXM	DGZ		Ignition Starter Switch Transparent 8-PIN,N73
	68011212AA	1	2, 3, 6, 7	L		EG2, EXM	DGZ		Ignition Starter Switch Blue 8-PIN;COD.C;N73
3									TERMINAL
	05103873AA	3	3, 7	L	03, 05	EG2, EXM	DGZ		
		3	2, 3, 6, 7	L	13, 15, 17, 53, 55	EG2, EXM	DGZ		
4	68011266AA	1	2, 3, 6, 7	L		EG2, EXM	DGZ		CONNECTOR, Ignition Starter Switch Black 5-PIN;N73
5	68016713AA	AR	2, 3, 6, 7	L		EG2, EXM	DGZ		TERMINAL
6	68022569AA	1	2, 3, 6, 7	L		EG2, EXM	DGZ		SWITCH, Stop Lamp
7									SWITCH, Multifunction
	68010448AA	1	2, 3, 6, 7	L		EG2, EXM	DGZ		Without [NHM]
	68010449AA	1	2, 3, 6, 7	L		EG2, EXM	DGZ		With [NHM]
	68026805AA	1	2, 3, 6, 7	L	13, 15, 17, 53, 55	EG2, EXM	DGZ		With [GEH]
	68026806AA	1	2, 3, 6, 7	L		EG2, EXM	DGZ		Without [GEH]
8	68010454AA	1	2, 3, 6, 7	L		EG2, EXM	DGZ		SWITCH, Speed Control, Cruise Control Tempomat

SPRINTER (VB)

SERIES	LINE	BODY	ENGINE	TRANSMISSION
L = LOWLINE	3 = HD DODGE 2WD 6 = Lt. Duty DODGE 4WD 2 = Med. Duty DODGE 2WD 7 = Med. Duty DODGE 4WD	17 = VAN WHEEL BASE 7 55 = WAGON WHEEL BASE 5 15 = VAN WHEEL BASE 5 53 = 119 WB 13 = 119 WB 05 = CAB CHASSIS WHEEL BASE 5 03 = CAB CHASSIS WHEEL BASE 3	EG2 = 3.5L V6 Gas Engine EXM = 3.0L V6 Turbo Diesel Engine	DGZ = 5-Speed Auto W5A380 Transmission

Switches Instrument Panel
Figure 8-806

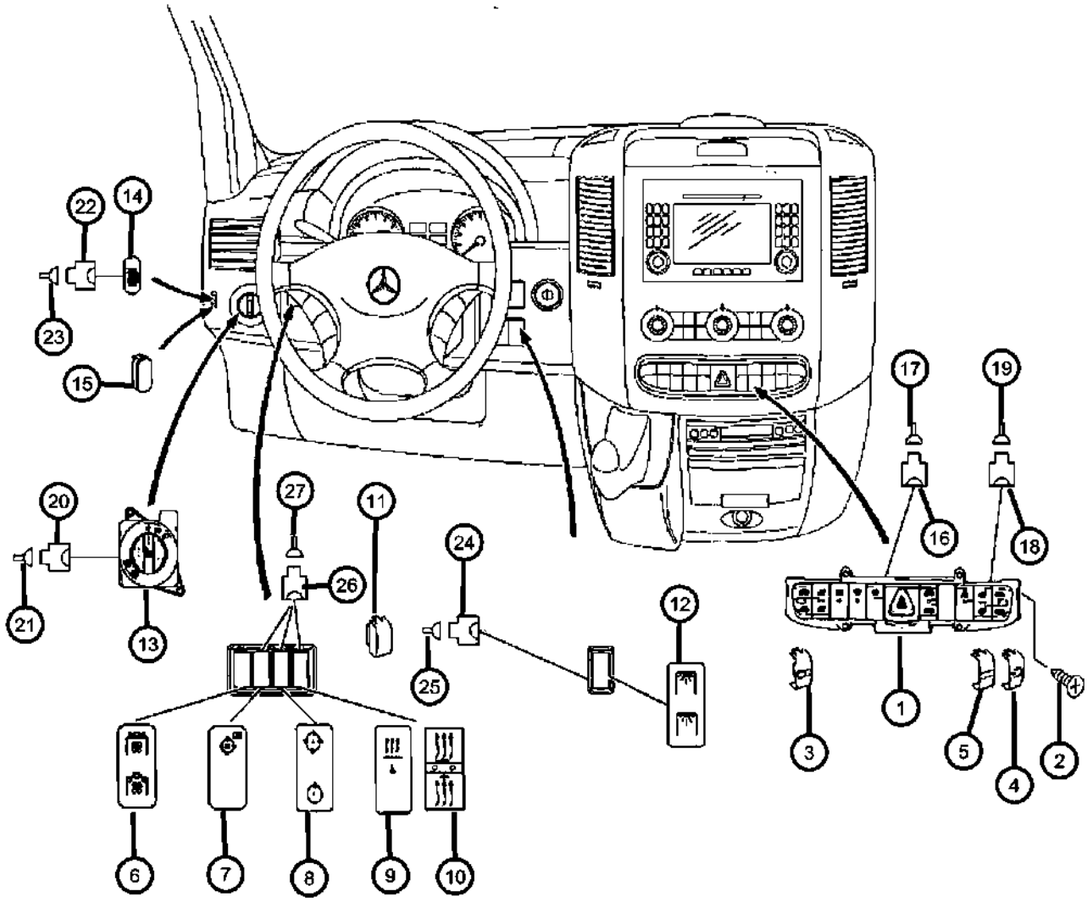

ITEM	PART NUMBER	QTY	LINE	SERIES	BODY	ENGINE	TRANS	TRIM	DESCRIPTION
1									SWITCH, Hazard Warning
	68010484AA	1	3, 7	L	03, 05	EG2, EXM	DGZ		With [BNB]
	68010514AA	1	2, 3, 6, 7	L	13, 15, 17, 53, 55	EG2, EXM	DGZ		
	68010515AA	1	2, 6	L	13, 15, 17	EG2, EXM	DGZ		With [46B]
		1	3, 7	L	05	EG2, EXM			With [46B]
2									SCREW, Tapping
	05098128AA	4	3, 7	L	03, 05	EG2, EXM	DGZ		
		4	2, 3, 6, 7	L	13, 15, 17, 53, 55	EG2, EXM	DGZ		
3	68010487AA	1	2, 3, 6, 7	L		EG2, EXM	DGZ		COVER, Switch Opening
4	68010488AA	1	2, 3, 6, 7	L		EG2, EXM	DGZ		COVER, Switch Opening
5	68010489AA	AR	2, 3, 6, 7	L		EG2, EXM	DGZ		COVER, Switch Opening
6	68010516AA	1	2, 3, 6, 7	L	13, 15, 17	EG2, EXM	DGZ		SWITCH, Instrument Panel, With [NHX]
7	68010492AA	1	2, 3, 6, 7	L		EG2, EXM	DGZ		SWITCH, With [XFM % NXF]
8	68010496AA	1	2, 3, 6, 7	L		EG2, EXM	DGZ		SWITCH, With [NXF]
9	68010500AA	1	2, 3, 6, 7	L		EG2, EXM	DGZ		SWITCH
10	68010499AA	1	2, 3, 6, 7	L		EG2, EXM	DGZ		SWITCH, Instrument Panel, With [HDB % XG3]
11	68010502AA	7	2, 3, 6, 7	L		EG2, EXM	DGZ		COVER, Switch Opening, Blind Cover
12									SWITCH, Instrument Panel
	68010494AA	1	3, 7	L	03, 05	EG2, EXM	DGZ		With [XZG]
	68010501AA	1	3, 7	L	03, 05	EG2, EXM	DGZ		With [XBE]
	68010517AA	1	2, 3, 6, 7	L	13, 15, 17, 53, 55	EG2, EXM	DGZ		With [LCQ]
13									SWITCH, Headlamp
	68010503AA	1	2, 3, 6, 7	L		EG2, EXM	DGZ		With [LNJ + NHM + 42B]
	68010507AA	1	2, 3, 6, 7	L		EG2, EXM	DGZ		With [NHM + 42B]
	68010510AA	1	2, 3, 6, 7	L		EG2, EXM	DGZ		
	68010505AA	1	2, 3, 6, 7	L		EG2, EXM	DGZ		With [LNJ + 42B]
14	68010511AA	1	2, 3, 6, 7	L		EG2, EXM	DGZ		SWITCH, Headlamp Leveling
15	68010512AA	1	2, 3, 6, 7	L		EXM, EG2	DGZ		COVER, Switch Opening
16	68010053AA	1	2, 3, 6, 7	L		EG2, EXM	DGZ		CONNECTOR, Upper Control Panel [8 Fach; N72/1]

SPRINTER (VB)

SERIES	LINE	BODY	ENGINE	TRANSMISSION
L = LOWLINE	3 = HD DODGE 2WD 6 = Lt. Duty DODGE 4WD 2 = Med. Duty DODGE 2WD 7 = Med. Duty DODGE 4WD	17 = VAN WHEEL BASE 7 55 = WAGON WHEEL BASE 5 15 = VAN WHEEL BASE 5 53 = 119 WB 13 = 119 WB 05 = CAB CHASSIS WHEEL BASE 5 03 = CAB CHASSIS WHEEL BASE 3	EG2 = 3.5L V6 Gas Engine EXM = 3.0L V6 Turbo Diesel Engine	DGZ = 5-Speed Auto W5A380 Transmission

Switches Instrument Panel
Figure 8-806

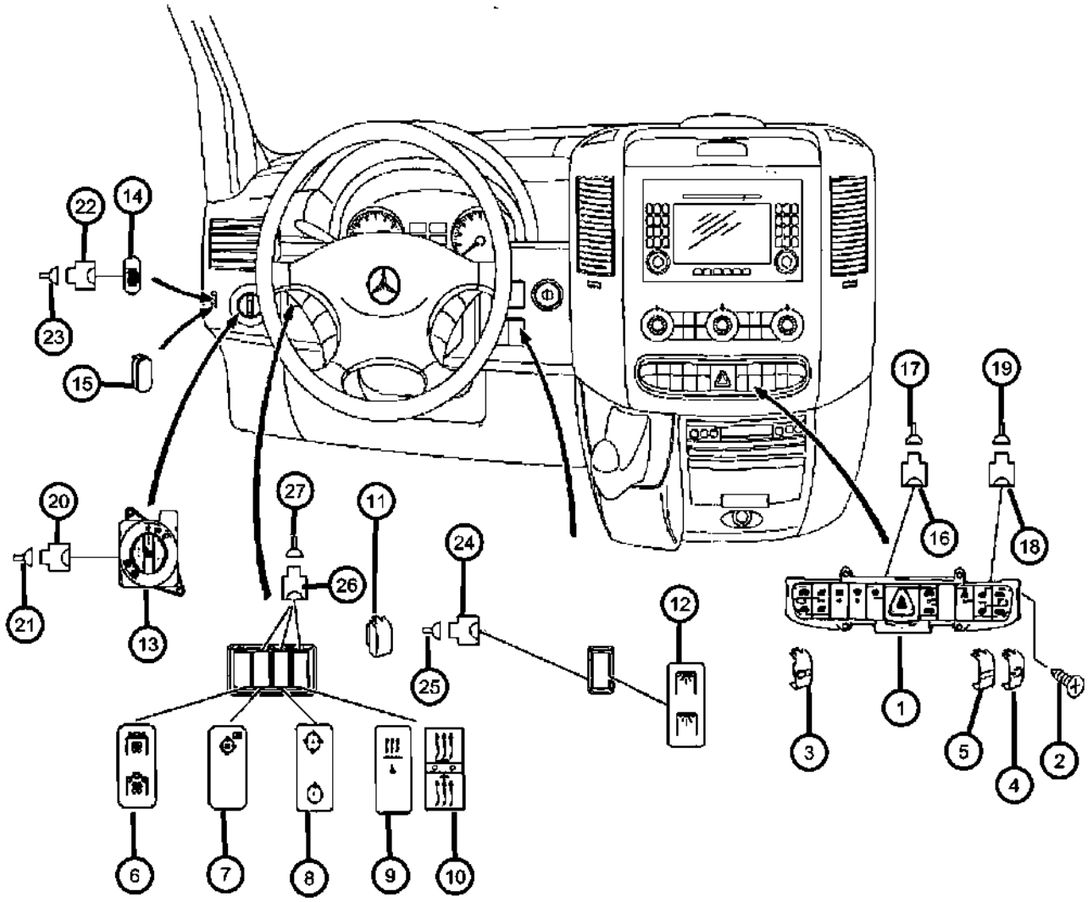

ITEM	PART NUMBER	QTY	LINE	SERIES	BODY	ENGINE	TRANS	TRIM	DESCRIPTION
17	05103873AA	AR	2, 3, 6, 7	L		EG2, EXM	DGZ		TERMINAL, [0.75 MM2 MQS; N72/1]
18	68011226AA	1	2, 3, 6, 7	L		EG2, EXM	DGZ		CONNECTOR, Upper Control Panel [4 Pin; N72/1]
19	05103882AA	1	2, 3, 6, 7	L					TERMINAL, [0.5 - 1.0 MM2 JPT; N72/1]
20	68011195AA	1	2, 3, 6, 7	L		EG2, EXM	DGZ		CONNECTOR, Light Rotary Switch [8PIN / S1]
21	05103873AA	AR	2, 3, 6, 7	L		EG2, EXM	DGZ		TERMINAL, [0.75 MM2 MQS; S1]
22	05120633AA	AR	2, 3, 6, 7	L		EG2, EXM	DGZ		CONNECTOR, Light Range Regulator [10 Pin S1/1]
23	05103882AA	1	2, 3, 6, 7	L					TERMINAL, [0.5 - 1.0 MM2 JPT; S1/1]
24	05120633AA	AR	2, 3, 6, 7	L		EG2, EXM	DGZ		CONNECTOR, [10 Pin]
25	05103882AA	1	2, 3, 6, 7	L					TERMINAL, [0.5 - 1.0 MM2]
26	05120633AA	AR	2, 3, 6, 7	L		EG2, EXM	DGZ		CONNECTOR, [10 Pin]
27	05103882AA	1	2, 3, 6, 7	L					TERMINAL, [0.5 - 1.0 MM2]

SPRINTER (VB)

SERIES	LINE	BODY	ENGINE	TRANSMISSION
L = LOWLINE	3 = HD DODGE 2WD 6 = Lt. Duty DODGE 4WD 2 = Med. Duty DODGE 2WD 7 = Med. Duty DODGE 4WD	17 = VAN WHEEL BASE 7 55 = WAGON WHEEL BASE 5 15 = VAN WHEEL BASE 5 53 = 119 WB 13 = 119 WB 05 = CAB CHASSIS WHEEL BASE 5 03 = CAB CHASSIS WHEEL BASE 3	EG2 = 3.5L V6 Gas Engine EXM = 3.0L V6 Turbo Diesel Engine	DGZ = 5-Speed Auto W5A380 Transmission

Switches Doors, Decklid, and Liftgate
Figure 8-815

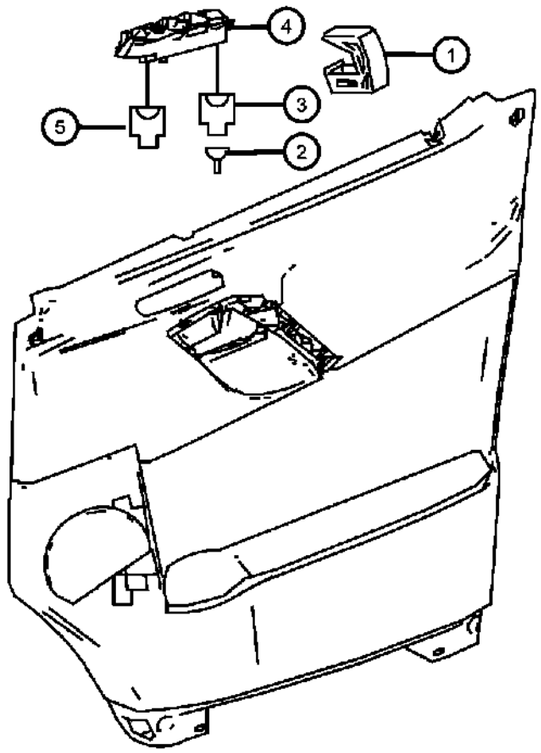

ITEM	PART NUMBER	QTY	LINE	SERIES	BODY	ENGINE	TRANS	TRIM	DESCRIPTION
1	68010052AA	1	2, 3, 6, 7	L		EXM, EG2	DGZ		BRACKET
2	68010054AA	AR	2, 3, 6, 7	L		EG2, EXM	DGZ		TERMINAL
3									CONNECTOR
	05120717AA	1	3, 7	L	03, 05	EG2, EXM	DGZ		Triple 3-PIN,COD.A
		1	2, 3, 6, 7	L	13, 15, 17, 53, 55	EG2, EXM	DGZ		Triple 3-PIN,COD.A
4									SWITCH, Power Window
	68010048AA	1	2, 3, 6, 7	L		EG2, EXM	DGZ		Left
	68010050AA	1	2, 3, 6, 7	L		EG2, EXM	DGZ		With [GTB], Left
	68010117AA	1	2, 3, 6, 7	L		EG2, EXM	DGZ		Right
5	68010053AA	1	2, 3, 6, 7	L		EG2, EXM	DGZ		CONNECTOR

SPRINTER (VB)

SERIES	LINE	BODY	ENGINE	TRANSMISSION
L = LOWLINE	3 = HD DODGE 2WD 6 = Lt. Duty DODGE 4WD 2 = Med. Duty DODGE 2WD 7 = Med. Duty DODGE 4WD	17 = VAN WHEEL BASE 7 55 = WAGON WHEEL BASE 5 15 = VAN WHEEL BASE 5 53 = 119 WB 13 = 119 WB 05 = CAB CHASSIS WHEEL BASE 5 03 = CAB CHASSIS WHEEL BASE 3	EG2 = 3.5L V6 Gas Engine EXM = 3.0L V6 Turbo Diesel Engine	DGZ = 5-Speed Auto W5A380 Transmission

Switches Steering Column and Wheel
Figure 8-830

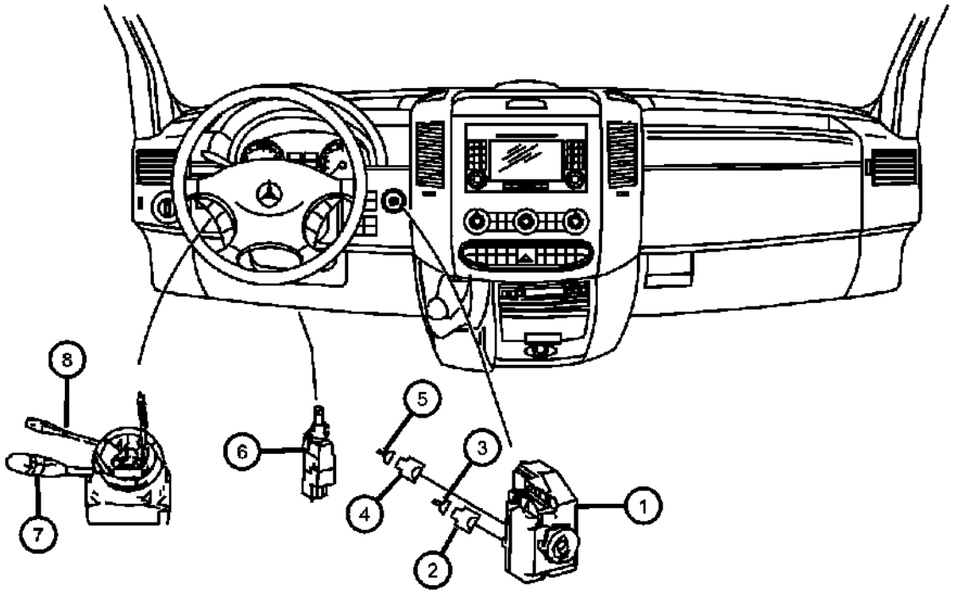

ITEM	PART NUMBER	QTY	LINE	SERIES	BODY	ENGINE	TRANS	TRIM	DESCRIPTION
1	68023969AA	1	2, 3, 6, 7	L		EG2, EXM	DGZ		CYLINDER, Ignition Lock
2									CONNECTOR
	68011195AA	1	2, 3, 6, 7	L		EG2, EXM	DGZ		Ignition Starter Switch Black 8-PIN;N73
	68011198AA	1	2, 3, 6, 7	L		EG2, EXM	DGZ		Ignition Starter Switch Transparent 8-PIN,N73
	68011212AA	1	2, 3, 6, 7	L		EG2, EXM	DGZ		Ignition Starter Switch Blue 8-PIN;COD.C;N73
3									TERMINAL
	05103873AA	3	3, 7	L	03, 05	EG2, EXM	DGZ		
		3	2, 3, 6, 7	L	13, 15, 17, 53, 55	EG2, EXM	DGZ		
4	68011266AA	1	2, 3, 6, 7	L		EG2, EXM	DGZ		CONNECTOR, Ignition Starter Switch Black 5-PIN;N73
5	68016713AA	AR	2, 3, 6, 7	L		EG2, EXM	DGZ		TERMINAL
6	68022569AA	1	2, 3, 6, 7	L		EG2, EXM	DGZ		SWITCH, Stop Lamp
7									SWITCH, Multifunction
	68010448AA	1	2, 3, 6, 7	L		EG2, EXM	DGZ		Without [NHM]
	68010449AA	1	2, 3, 6, 7	L		EG2, EXM	DGZ		With [NHM]
	68026805AA	1	2, 3, 6, 7	L	13, 15, 17, 53, 55	EG2, EXM	DGZ		With [GEH]
	68026806AA	1	2, 3, 6, 7	L		EG2, EXM	DGZ		Without [GEH]
8	68010454AA	1	2, 3, 6, 7	L		EG2, EXM	DGZ		SWITCH, Speed Control, Cruise Control Tempomat

SPRINTER (VB)

SERIES	LINE	BODY	ENGINE	TRANSMISSION
L = LOWLINE	3 = HD DODGE 2WD 6 = Lt. Duty DODGE 4WD 2 = Med. Duty DODGE 2WD 7 = Med. Duty DODGE 4WD	17 = VAN WHEEL BASE 7 55 = WAGON WHEEL BASE 5 15 = VAN WHEEL BASE 5 53 = 119 WB 13 = 119 WB 05 = CAB CHASSIS WHEEL BASE 5 03 = CAB CHASSIS WHEEL BASE 3	EG2 = 3.5L V6 Gas Engine EXM = 3.0L V6 Turbo Diesel Engine	DGZ = 5-Speed Auto W5A380 Transmission

Horns
Figure 8-905

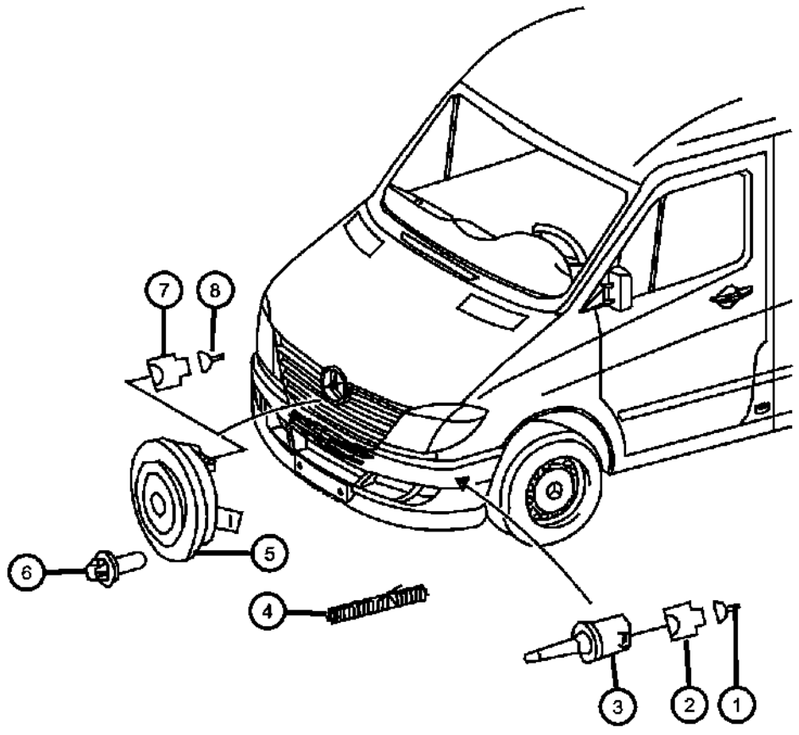

ITEM	PART NUMBER	QTY	LINE	SERIES	BODY	ENGINE	TRANS	TRIM	DESCRIPTION
1									TERMINAL
	05103873AA	3	3, 7	L	03, 05	EG2, EXM	DGZ		0.75 MM2,MQS;B14
		3	2, 3, 6, 7	L	13, 15, 17, 53, 55	EG2, EXM	DGZ		0.75 MM2,MQS;B14
2	05120277AA	1	2, 3, 6, 7	L		EG2, EXM	DGZ		CONNECTOR, Wiring Repair, Sensor of Outside Temperature Indicator 2-PIN,B14
3									SENSOR, Ambient Temperature
	05101096AA	1	3, 7	L	03, 05	EG2, EXM	DGZ		Outboard Temperature Feeler
		1	2, 3, 6, 7	L	13, 15, 17, 53, 55	EG2, EXM	DGZ		Outboard Temperature Feeler
4	05133388AA	1	2, 3, 6, 7	L		EG2, EXM	DGZ		TUBE, Heat Shrink, H1,H18,H18/1
5									HORN
	05120370AA	1	3, 7	L	03, 05	EG2, EXM	DGZ		
		1	2, 3, 6, 7	L	13, 15, 17, 53, 55	EG2, EXM	DGZ		
6	05073723AB	1	2, 3, 6, 7	L		EXM	DGZ		SCREW, Horn Mounting M8x20
7	05166277AA	1	2, 3, 6, 7	L		EG2, EXM	DGZ		CONNECTOR, 2-PIN,H1
8	68011404AA	AR	2, 3, 6, 7	L		EG2, EXM	DGZ		TERMINAL, H1

SPRINTER (VB)

SERIES	LINE	BODY	ENGINE	TRANSMISSION
L = LOWLINE	3 = HD DODGE 2WD 6 = Lt. Duty DODGE 4WD 2 = Med. Duty DODGE 2WD 7 = Med. Duty DODGE 4WD	17 = VAN WHEEL BASE 7 55 = WAGON WHEEL BASE 5 15 = VAN WHEEL BASE 5 53 = 119 WB 13 = 119 WB 05 = CAB CHASSIS WHEEL BASE 5 03 = CAB CHASSIS WHEEL BASE 3	EG2 = 3.5L V6 Gas Engine EXM = 3.0L V6 Turbo Diesel Engine	DGZ = 5-Speed Auto W5A380 Transmission

Audible Reverse Signal Horn
Figure 8-906

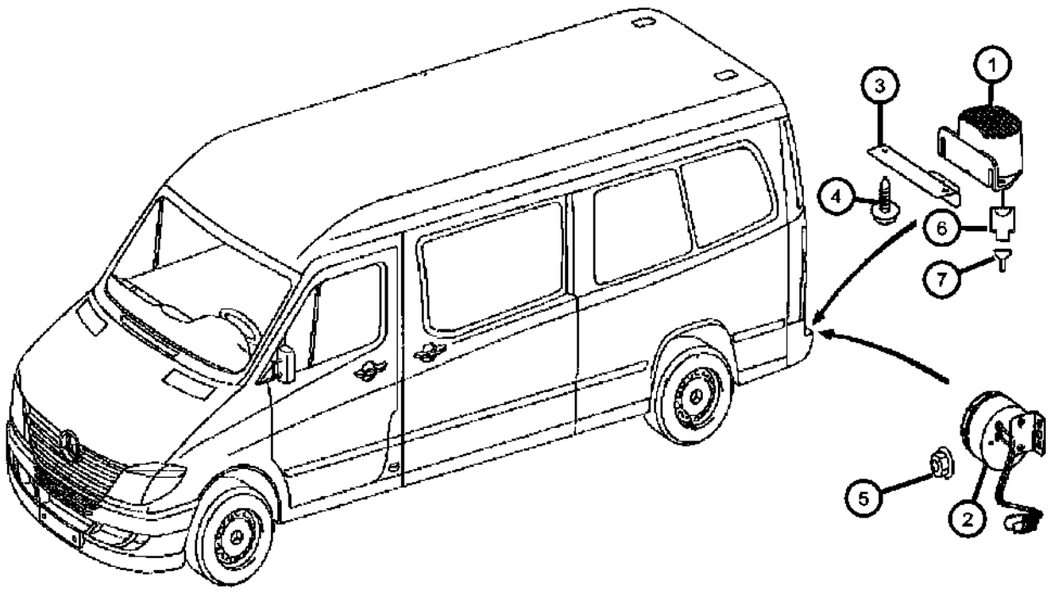

ITEM	PART NUMBER	QTY	LINE	SERIES	BODY	ENGINE	TRANS	TRIM	DESCRIPTION
1	05135946AA	1	2, 3, 6, 7	L	13, 15, 17, 53, 55	EG2, EXM	DGZ		HORN, End Crossmember Inner / With [XAW] Sales Codes
2	68024748AA	1	2, 3, 6, 7	L		EG2, EXM	DGZ		HORN, End Of Crossmember Inner / Pulse Sender Unit
3	05135596AA	1	2, 3, 6, 7	L	13, 15, 17, 53, 55	EG2, EXM	DGZ		BRACKET, Horn
4	06104565AA	2	2, 3, 6, 7	L		EG2, EXM	DGZ		SCREW, [4.2x9.5]
5	68004878AA	1	2, 3, 6, 7	L	13, 15, 17, 53, 55	EG2, EXM	DGZ		NUT, [M6]
6	05120277AA	1	2, 3, 6, 7	L		EG2, EXM	DGZ		CONNECTOR, Wiring Repair, [2 Pin / H3/4]
7	05103874AA	1	2, 3, 6, 7	L		EG2, EXM	DGZ		TERMINAL, [0.75 MM2; MQS; H3/4]
-8	05120860AA	1	2, 3, 6, 7	L		EG2, EXM	DGZ		GASKET, [1.6 - 1.9 MM2; H3/4]

SPRINTER (VB)

SERIES	LINE	BODY	ENGINE	TRANSMISSION
L = LOWLINE	3 = HD DODGE 2WD 6 = Lt. Duty DODGE 4WD 2 = Med. Duty DODGE 2WD 7 = Med. Duty DODGE 4WD	17 = VAN WHEEL BASE 7 55 = WAGON WHEEL BASE 5 15 = VAN WHEEL BASE 5 53 = 119 WB 13 = 119 WB 05 = CAB CHASSIS WHEEL BASE 5 03 = CAB CHASSIS WHEEL BASE 3	EG2 = 3.5L V6 Gas Engine EXM = 3.0L V6 Turbo Diesel Engine	DGZ = 5-Speed Auto W5A380 Transmission

Siren Alarm System
Figure 8-910

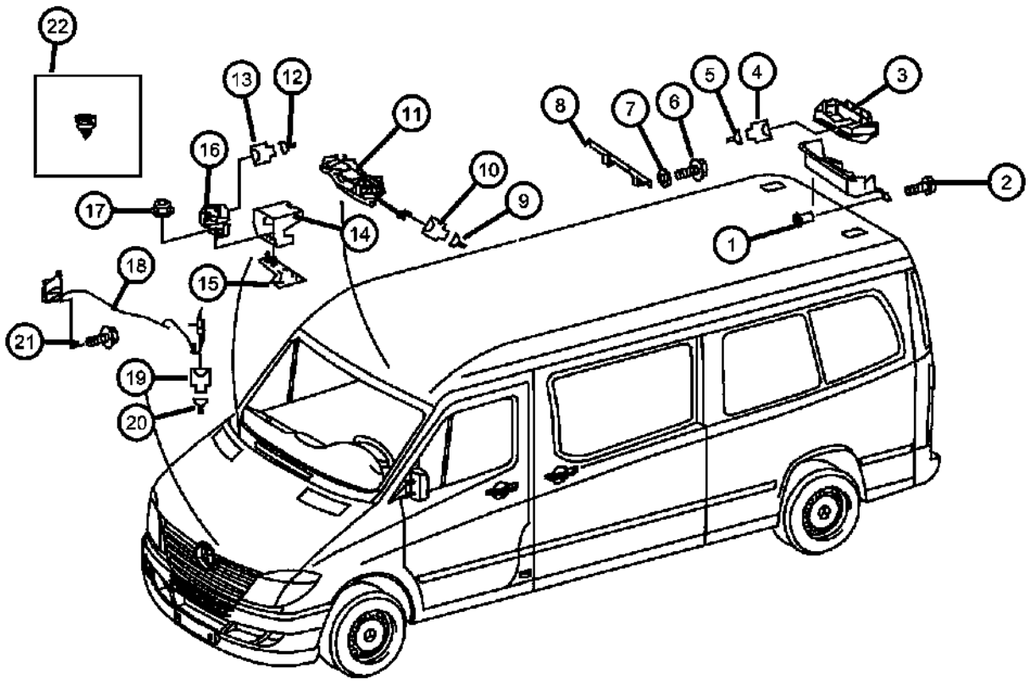

ITEM	PART NUMBER	QTY	LINE	SERIES	BODY	ENGINE	TRANS	TRIM	DESCRIPTION
1									RIVET, NONE, SPRINTER
	05174643AA	2	2, 3, 6, 7	L	13, 15, 17, 53, 55	EG2, EXM	DGZ		
		2	2, 3, 6, 7	L	53, 55	EG2, EXM	DGZ		
2	68013429AA	1	2, 3, 6, 7	L		EG2, EXM	DGZ		BRACKET
3	0ZF50RC3AA	2	2, 3, 6, 7	L	13, 15, 17, 53, 55	EG2, EXM	DGZ		SWITCH, Loading Compartment
4	05120636AA	1	2, 3, 6, 7	L		EG2, EXM	DGZ		CONNECTOR, Interior Motion Sensor 4-PINB44/2
5	68016730AA	AR	2, 3, 6, 7	L		EG2, EXM	DGZ		TERMINAL
6	68010354AA	1	2, 3, 6, 7	L	13, 15, 17, 53, 55	EG2, EXM	DGZ		SCREW
7									WASHER
	05104639AA	2	2, 3, 6, 7	L	13, 15, 17, 53, 55	EG2, EXM	DGZ		
		2	2, 3, 6, 7	L	13, 15, 17	EXM, EG2	DGZ		
8	68013428AA	1	2, 3, 6, 7	L		EG2, EXM	DGZ		BRACKET
9	68016730AA	AR	2, 3, 6, 7	L		EG2, EXM	DGZ		TERMINAL
10	05120636AA	1	2, 3, 6, 7	L		EG2, EXM	DGZ		CONNECTOR, Interior Motion Sensor
11	68017615AA	1	2, 3, 6, 7	L		EG2, EXM	DGZ		SENSOR, Interior Sensor
12	68016719AA	AR	2, 3, 6, 7	L		EG2, EXM	DGZ		TERMINAL, H3/1
13	68011397AA	1	2, 3, 6, 7	L		EG2, EXM	DGZ		CONNECTOR, Wiring, Alarm Horn H3/1
14	68029376AA	1	2, 3, 6, 7	L		EG2, EXM	DGZ		COVER, Anti-Theft Alarm System
15	68004682AA	1	2, 3, 6, 7	L		EG2, EXM	DGZ		BRACKET
16	68013410AA	1	2, 3, 6, 7	L		EG2, EXM	DGZ		SIREN, Alarm
17									NUT
	68004878AA	3	2, 3, 6, 7	L	13, 15, 17, 53, 55	EG2, EXM	DGZ		Alarm Siren to A-Pillar
		3	3, 7	L	03, 05	EG2, EXM	DGZ		Alarm Siren to A-Pillar
18	68034236AA	1	2, 3, 6, 7	L		EG2, EXM	DGZ		SWITCH, Underhood
19	05120277AA	1	2, 3, 6, 7	L		EG2, EXM	DGZ		CONNECTOR, Wiring Repair
20	68016719AA	AR	2, 3, 6, 7	L		EG2, EXM	DGZ		TERMINAL
21	06104634AA	2	2, 3, 6, 7	L		EG2, EXM	DGZ		SCREW, Console
22	68013413AA	1	2, 3, 6, 7	L	13, 15, 17, 53, 55	EG2, EXM	DGZ		CLIP, Retainer

SPRINTER (VB)

SERIES	LINE	BODY	ENGINE	TRANSMISSION
L = LOWLINE	3 = HD DODGE 2WD 6 = Lt. Duty DODGE 4WD 2 = Med. Duty DODGE 2WD 7 = Med. Duty DODGE 4WD	17 = VAN WHEEL BASE 7 55 = WAGON WHEEL BASE 5 15 = VAN WHEEL BASE 5 53 = 119 WB 13 = 119 WB 05 = CAB CHASSIS WHEEL BASE 5 03 = CAB CHASSIS WHEEL BASE 3	EG2 = 3.5L V6 Gas Engine EXM = 3.0L V6 Turbo Diesel Engine	DGZ = 5-Speed Auto W5A380 Transmission

Battery Tray and Support
Figure 8-1005

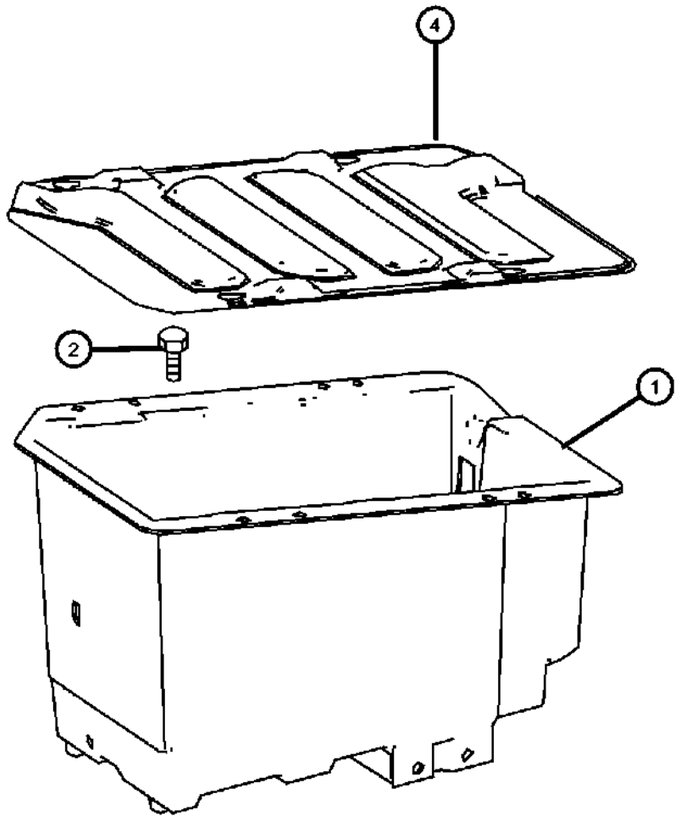

ITEM	PART NUMBER	QTY	LINE	SERIES	BODY	ENGINE	TRANS	TRIM	DESCRIPTION
1	68006357AA	1	2, 3, 6, 7	L		EG2, EXM	DGZ		TRAY, Battery, In Passenger Compartment
2	05126197AA	2	2, 3, 6, 7	L		EG2, EXM	DGZ		SCREW
-3									SCREW, Hex Head, M6x12
	06104120AA	1	3, 7	L	03, 05	EG2, EXM	DGZ		
		1	2, 3, 6, 7	L	13, 15, 17, 53, 55	EG2, EXM	DGZ		
4	68006358AA	1	2, 3, 6, 7	L		EG2, EXM	DGZ		COVER, Battery Cover

SPRINTER (VB)

SERIES	LINE	BODY	ENGINE	TRANSMISSION
L = LOWLINE	3 = HD DODGE 2WD 6 = Lt. Duty DODGE 4WD 2 = Med. Duty DODGE 2WD 7 = Med. Duty DODGE 4WD	17 = VAN WHEEL BASE 7 55 = WAGON WHEEL BASE 5 15 = VAN WHEEL BASE 5 53 = 119 WB 13 = 119 WB 05 = CAB CHASSIS WHEEL BASE 5 03 = CAB CHASSIS WHEEL BASE 3	EG2 = 3.5L V6 Gas Engine EXM = 3.0L V6 Turbo Diesel Engine	DGZ = 5-Speed Auto W5A380 Transmission

Auxilary Battery Tray, Battery Cable & Contactor
Figure 8-1010

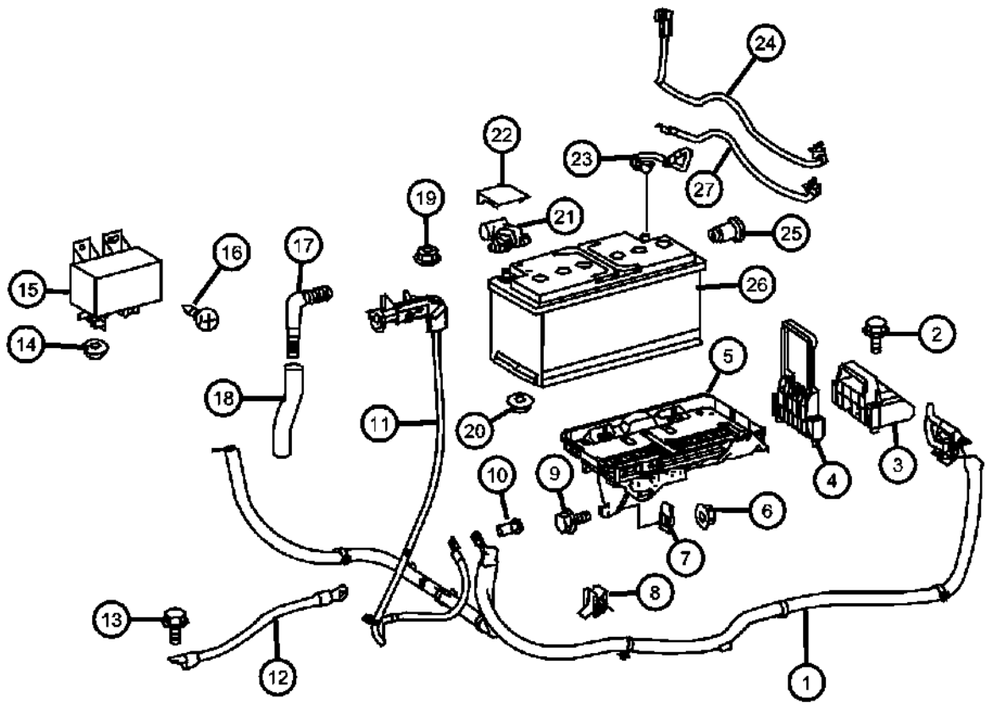

ITEM	PART NUMBER	QTY	LINE	SERIES	BODY	ENGINE	TRANS	TRIM	DESCRIPTION
1									HARNESS, Wiring
	68011460AA	1	2, 3, 6, 7	L		EXM	DGZ		
	68011461AA	1	2, 3, 6, 7	L		EG2	DGZ		
2									BOLT, Hex Flange Head, M6x1.00x70.00
	06104191AA	2	3, 7	L	03, 05	EG2, EXM	DGZ		Battery Fastening
		2	2, 3, 6, 7	L	13, 15, 17, 53, 55	EG2, EXM	DGZ		Battery Fastening
3	68011030AA	1	2, 3, 6, 7	L		EG2, EXM	DGZ		BRACKET, Battery
4	68011031AA	1	2, 3, 6, 7	L		EG2, EXM	DGZ		BRACKET, Battery
5	68011034AA	1	2, 3, 6, 7	L		EG2, EXM	DGZ		TRAY, Battery, Auxilary Battery Tray With Sales Code [BC1]
6									NUT
	68004878AA	1	3, 7	L	03, 05	EG2, EXM	DGZ		Support to Firewall M6
		1	3, 6, 2, 7	L	13, 15, 17, 53, 55	EG2, EXM	DGZ		Support to Firewall M6
7	06104736AA	6	2, 3, 6, 7	L		EG2, EXM	DGZ		NUT, Clip-On, M6
8									RETAINER
	68011037AA	1	3, 7	L	03, 05	EG2, EXM	DGZ		Drain Hose
		1	2, 3, 6, 7	L	13, 15, 17, 53, 55	EG2, EXM	DGZ		Drain Hose
9	05183964AA	1	2, 3, 6, 7	L		EXM	DGZ		BOLT, Hex Flange Head, M6x1.00x10.90
10	68011453AA	1	2, 3, 6, 7	L		EG2, EXM	DGZ		NUT
11									HARNESS, Wiring
	68011449AA	1	2, 3, 6, 7	L		EXM	DGZ		Jump Starting Point
	68011450AA	1	3, 7	L	03, 05	EG2	DGZ		Jump Starting Point
		1	2, 6	L	13, 15, 17, 53, 55	EG2	DGZ		Jump Starting Point
12	05120226AA	1	2, 3, 6, 7	L		EG2, EXM	DGZ		STRAP, Ground, Engine Support,Left to Longtudinal Member
13	06104022AB	2	3, 7	L	03, 05	EG2, EXM	DGZ		SCREW, Ground Strap Mounting M8x16
14									NUT
	68004878AA	2	3, 7	L	03, 05	EG2, EXM	DGZ		
		2	2, 3, 6, 7	L	13, 15, 17, 53, 55	EG2, EXM	DGZ		

SPRINTER (VB)

SERIES	LINE	BODY	ENGINE	TRANSMISSION
L = LOWLINE	3 = HD DODGE 2WD 6 = Lt. Duty DODGE 4WD 2 = Med. Duty DODGE 2WD 7 = Med. Duty DODGE 4WD	17 = VAN WHEEL BASE 7 55 = WAGON WHEEL BASE 5 15 = VAN WHEEL BASE 5 53 = 119 WB 13 = 119 WB 05 = CAB CHASSIS WHEEL BASE 5 03 = CAB CHASSIS WHEEL BASE 3	EG2 = 3.5L V6 Gas Engine EXM = 3.0L V6 Turbo Diesel Engine	DGZ = 5-Speed Auto W5A380 Transmission

Auxilary Battery Tray, Battery Cable & Contactor
Figure 8-1010

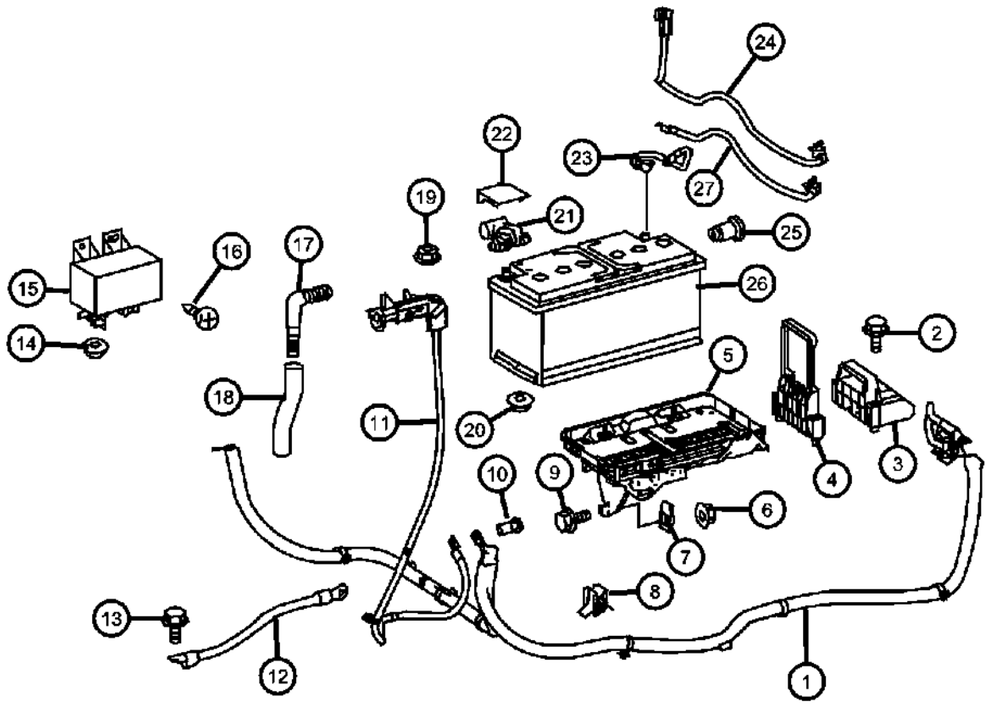

ITEM	PART NUMBER	QTY	LINE	SERIES	BODY	ENGINE	TRANS	TRIM	DESCRIPTION
15									RELAY
	05120361AA	1	3, 7	L	03, 05	EG2, EXM	DGZ		Cut-Off Relay
		1	2, 3, 6, 7	L	13, 15, 17, 53, 55	EXM, EG2	DGZ		Cut-Off Relay
16	06104566AA	2	2, 3, 6, 7	L		EG2, EXM	DGZ		SCREW, Tapping
17									ELBOW, Male Adapter
	05125802AA	1	2, 3, 6, 7	L	13, 15, 17, 53, 55	EG2, EXM	DGZ		To Battery
		1	2, 3, 6, 7	L	03, 05	EG2, EXM	DGZ		To Battery
18	05125962AA	40	2, 3, 6, 7	L		EG2, EXM	DGZ		HOSE, Battery Vent, 5x1MM
19	06105169AA	1	2, 3, 6, 7	L		EG2, EXM	DGZ		NUT, Fuse Box to Battery Case M8
20									NUT
	68004878AA	2	2, 3, 6, 7	L	17, 53, 55, 13, 15	EG2, EXM	DGZ		Battery Mounting M6
		2	3, 7	L	03, 05	EG2, EXM	DGZ		Battery Mounting M6
21									TERMINAL, Battery
	05120949AA	1	2, 3, 6, 7	L		EG2, EXM	DGZ		Heavy Duty
	68011027AA	1	2, 3, 6, 7	L		EG2, EXM	DGZ		
22									COVER, Battery Terminal
	05098850AA	1	3, 7	L	03, 05	EG2, EXM	DGZ		
		1	2, 3, 6, 7	L	13, 15, 17, 53, 55	EG2, EXM	DGZ		
23	68011458AA	1	2, 3, 6, 7	L		EG2, EXM	DGZ		STRAP, Ground, Additional Battery
24	68011454AA	1	2, 3, 6, 7	L		EG2, EXM	DGZ		HARNESS, Wiring, From Battery to Frame
25									PLUG
	05099303AA	1	3, 7	L	03, 05	EG2, EXM	DGZ		To Battery 6x8MM
		1	2, 3, 6, 7	L	13, 15, 17, 53, 55	EG2, EXM	DGZ		To Battery 6x8MM
26									BATTERY
	05133941AA	1	3, 7	L	03, 05	EG2, EXM	DGZ		12V/100AH / Auxilary Battery
	BB049850AA								Mopar Replacement Battery (72 Series)
		1	2, 3, 6, 7	L	13, 15, 17, 53, 55	EG2, EXM	DGZ		12V/100AH / Auxilary Battery
	BB049850AA								Mopar Replacement Battery (72 Series)

SPRINTER (VB)

SERIES	LINE	BODY	ENGINE	TRANSMISSION
L = LOWLINE	3 = HD DODGE 2WD 6 = Lt. Duty DODGE 4WD 2 = Med. Duty DODGE 2WD 7 = Med. Duty DODGE 4WD	17 = VAN WHEEL BASE 7 55 = WAGON WHEEL BASE 5 15 = VAN WHEEL BASE 5 53 = 119 WB 13 = 119 WB 05 = CAB CHASSIS WHEEL BASE 5 03 = CAB CHASSIS WHEEL BASE 3	EG2 = 3.5L V6 Gas Engine EXM = 3.0L V6 Turbo Diesel Engine	DGZ = 5-Speed Auto W5A380 Transmission

Auxilary Battery Tray, Battery Cable & Contactor
Figure 8-1010

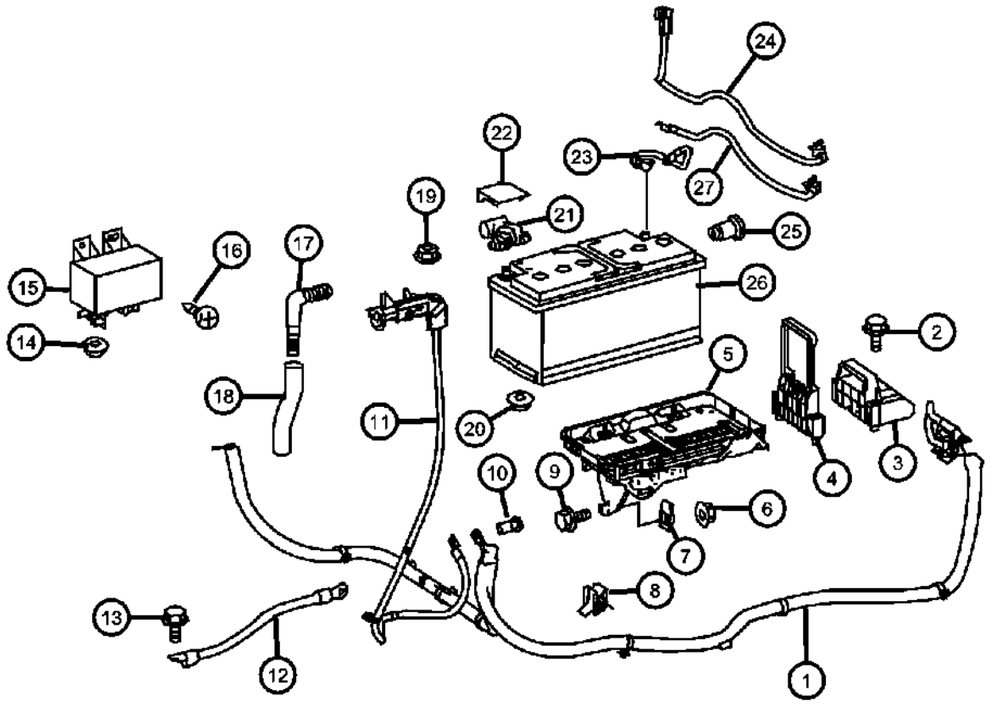

ITEM	PART NUMBER	QTY	LINE	SERIES	BODY	ENGINE	TRANS	TRIM	DESCRIPTION
	05134258AA	1	2, 3, 6, 7	L		EG2, EXM	DGZ		Starter Battery
27	68011464AA	1	2, 3, 6, 7	L		EG2, EXM	DGZ		STRAP, Ground, Ground to Frame

SPRINTER (VB)

SERIES	LINE	BODY	ENGINE	TRANSMISSION
L = LOWLINE	3 = HD DODGE 2WD 6 = Lt. Duty DODGE 4WD 2 = Med. Duty DODGE 2WD 7 = Med. Duty DODGE 4WD	17 = VAN WHEEL BASE 7 55 = WAGON WHEEL BASE 5 15 = VAN WHEEL BASE 5 53 = 119 WB 13 = 119 WB 05 = CAB CHASSIS WHEEL BASE 5 03 = CAB CHASSIS WHEEL BASE 3	EG2 = 3.5L V6 Gas Engine EXM = 3.0L V6 Turbo Diesel Engine	DGZ = 5-Speed Auto W5A380 Transmission

AR = use ase required - = Non illustrrated part

<< RETURN TO GROUP INDEX

Lamps Front
Figure 8-1105

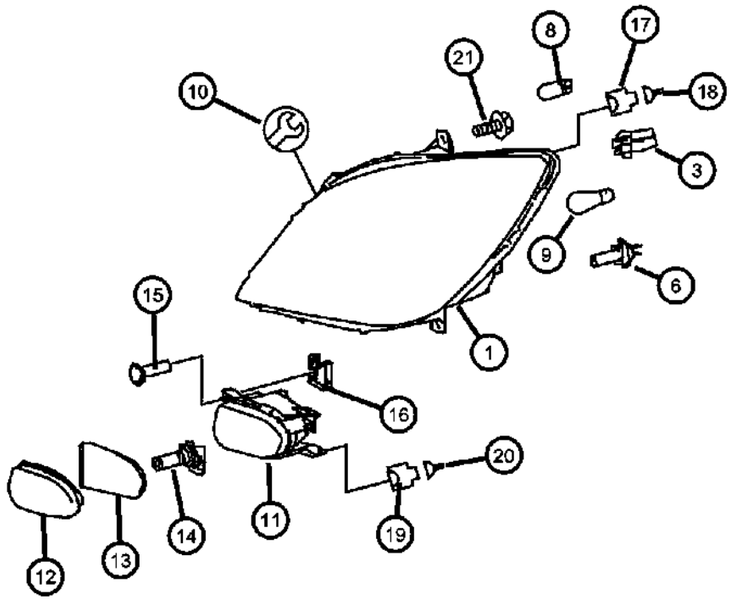

ITEM	PART NUMBER	QTY	LINE	SERIES	BODY	ENGINE	TRANS	TRIM	DESCRIPTION
1									LAMP, Headlamp Park And Turn
	68004882AA	1	2, 3, 6, 7	L		EG2, EXM	DGZ		With [LM2], Right
	68004883AA	1	2, 3, 6, 7	L		EG2, EXM	DGZ		With [LM2], Left
	68012120AA	1	2, 3, 6, 7	L		EG2, EXM	DGZ		Without [LM2], Right
	68012121AA	1	2, 3, 6, 7	L		EG2, EXM	DGZ		Without [LM2], Left
-2	68012126AA	2	2, 3, 6, 7	L		EG2, EXM	DGZ		MOTOR, Light Range Adjuster
3	05133959AA	2	2, 3, 6, 7	L		EG2, EXM	DGZ		SOCKET, Lamp
-4	68012127AA	2	2, 3, 6, 7	L		EG2, EXM	DGZ		MODULE
-5	68012128AA	2	2, 3, 6, 7	L		EG2, EXM	DGZ		SOCKET, Lamp
6	05104684AA	4	2, 3, 6, 7	L		EG2, EXM	DGZ		BULB, Headlamp, H-7
-7	68012130AA	2	2, 3, 6, 7	L		EG2, EXM	DGZ		BULB
8	68012129AA	2	2, 3, 6, 7	L		EG2, EXM	DGZ		BULB, Parking Lamp [12V / 5W]
9	05179070AA	2	2, 3, 6, 7	L		EG2, EXM	DGZ		BULB
10									BRACKET
	68012122AA	1	2, 3, 6, 7	L		EG2, EXM	DGZ		Headlamp Mounting Tabs Kit, Right
	68012123AA	1	2, 3, 6, 7	L		EG2, EXM	DGZ		Headlamp Mounting Tabs Kit, Left
11									LAMP, Fog
	68024973AA	1	2, 3, 6, 7	L		EG2, EXM	DGZ		Left
	68024972AA	1	2, 3, 6, 7	L		EG2, EXM	DGZ		Right
12									LENS
	68012132AA	1	2, 3, 6, 7	L		EG2, EXM	DGZ		Left
	68012137AA	1	2, 3, 6, 7	L		EG2, EXM	DGZ		Right
13	68012133AA	2	2, 3, 6, 7	L		EG2, EXM	DGZ		SEALRight & Left
14	05104684AA	4	2, 3, 6, 7	L		EG2, EXM	DGZ		BULB, Headlamp, H-7
15	06104599AA	4	2, 3, 6, 7	L		EG2, EXM	DGZ		SCREW, Tapping, [4.8x19]
16	68012139AA	4	2, 3, 6, 7	L		EG2, EXM	DGZ		RETAINER
17	05103896AA	2	2, 3, 6, 7	L		EG2, EXM	DGZ		CONNECTOR, [E1, E1/6, E2,E2/6], Right & Left
18	05103898AA	AR	2, 3, 6, 7	L		EG2, EXM	DGZ		TERMINAL, Female, [0.5 - 1.0 MM2]
19	68011295AA	2	2, 3, 6, 7	L		EG2, EXM	DGZ		CONNECTOR, Wiring, Fog Lamp [2 Pin; E5/1, E5/2], Right & Left
20									TERMINAL

SPRINTER (VB)

SERIES	LINE	BODY	ENGINE	TRANSMISSION
L = LOWLINE	3 = HD DODGE 2WD 6 = Lt. Duty DODGE 4WD 2 = Med. Duty DODGE 2WD 7 = Med. Duty DODGE 4WD	17 = VAN WHEEL BASE 7 55 = WAGON WHEEL BASE 5 15 = VAN WHEEL BASE 5 53 = 119 WB 13 = 119 WB 05 = CAB CHASSIS WHEEL BASE 5 03 = CAB CHASSIS WHEEL BASE 3	EG2 = 3.5L V6 Gas Engine EXM = 3.0L V6 Turbo Diesel Engine	DGZ = 5-Speed Auto W5A380 Transmission

Lamps Front
Figure 8-1105

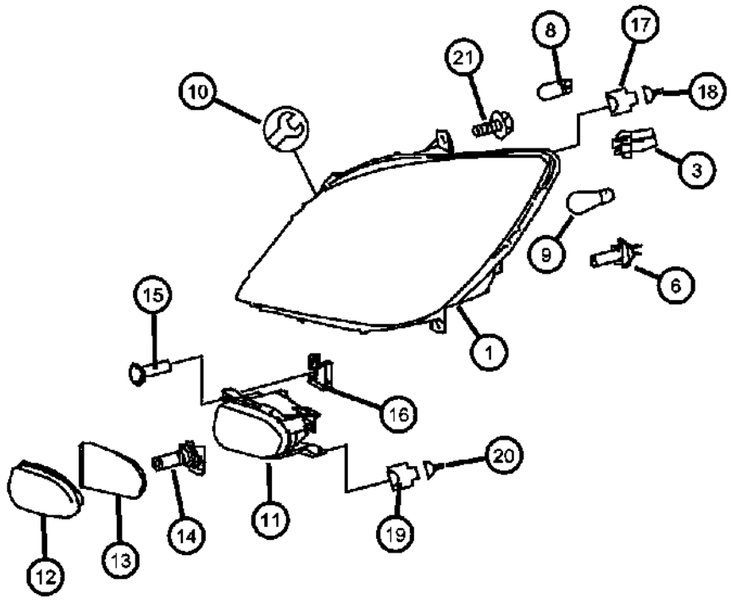

ITEM	PART NUMBER	QTY	LINE	SERIES	BODY	ENGINE	TRANS	TRIM	DESCRIPTION
	05133353AA	AR	2, 3, 6, 7	L		EG2	DGZ		[0.5 - 1.0 MM2]
		AR	2, 3, 6, 7	L		EXM	DGZ		[0.5 - 1.0 MM2]
21	68004879AA	8	2, 3, 6, 7	L		EG2, EXM	DGZ		SCREW, Headlamp Mounting

SPRINTER (VB)

SERIES	LINE	BODY	ENGINE	TRANSMISSION
L = LOWLINE	3 = HD DODGE 2WD 6 = Lt. Duty DODGE 4WD 2 = Med. Duty DODGE 2WD 7 = Med. Duty DODGE 4WD	17 = VAN WHEEL BASE 7 55 = WAGON WHEEL BASE 5 15 = VAN WHEEL BASE 5 53 = 119 WB 13 = 119 WB 05 = CAB CHASSIS WHEEL BASE 5 03 = CAB CHASSIS WHEEL BASE 3	EG2 = 3.5L V6 Gas Engine EXM = 3.0L V6 Turbo Diesel Engine	DGZ = 5-Speed Auto W5A380 Transmission

Lamps Rear
Figure 8-1109

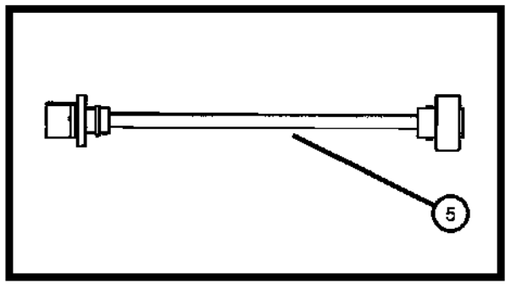

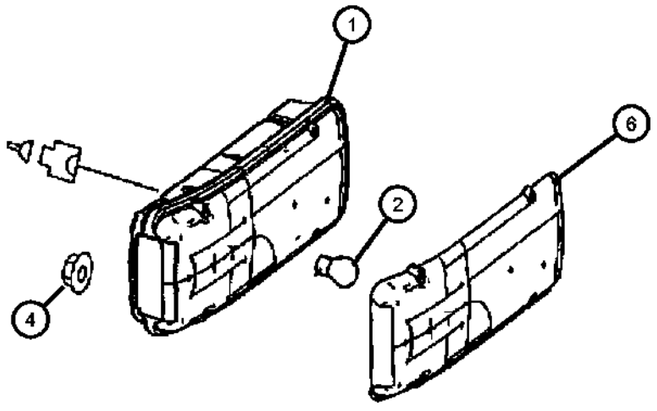

ITEM	PART NUMBER	QTY	LINE	SERIES	BODY	ENGINE	TRANS	TRIM	DESCRIPTION
1									LAMP, Tail Stop Turn
	68012140AA	1	3, 7	L	03, 05	EG2, EXM	DGZ		Right
	68012141AA	1	3, 7	L	03, 05	EG2, EXM	DGZ		Left
2	05104649AA	2	2, 3, 6, 7	L		EG2, EXM	DGZ		BULB, [12V - 5W]
-3	L0007506	2	2, 3, 6, 7	L		EG2, EXM	DGZ		BULB, 7506
4	06105169AA	4	3, 7	L	03, 05	EG2, EXM	DGZ		NUT
5	68016790AA	2	3, 7	L	03, 05	EG2, EXM	DGZ		WIRING
6									LENS, Taillamp
	68031562AA	1	3, 7	L	03, 05	EG2, EXM	DGZ		Left
	68031563AA	1	3, 7	L	03, 05	EG2, EXM	DGZ		Right

SPRINTER (VB)

SERIES	LINE	BODY	ENGINE	TRANSMISSION
L = LOWLINE	3 = HD DODGE 2WD 6 = Lt. Duty DODGE 4WD 2 = Med. Duty DODGE 2WD 7 = Med. Duty DODGE 4WD	17 = VAN WHEEL BASE 7 55 = WAGON WHEEL BASE 5 15 = VAN WHEEL BASE 5 53 = 119 WB 13 = 119 WB 05 = CAB CHASSIS WHEEL BASE 5 03 = CAB CHASSIS WHEEL BASE 3	EG2 = 3.5L V6 Gas Engine EXM = 3.0L V6 Turbo Diesel Engine	DGZ = 5-Speed Auto W5A380 Transmission

Lamps Rear
Figure 8-1111

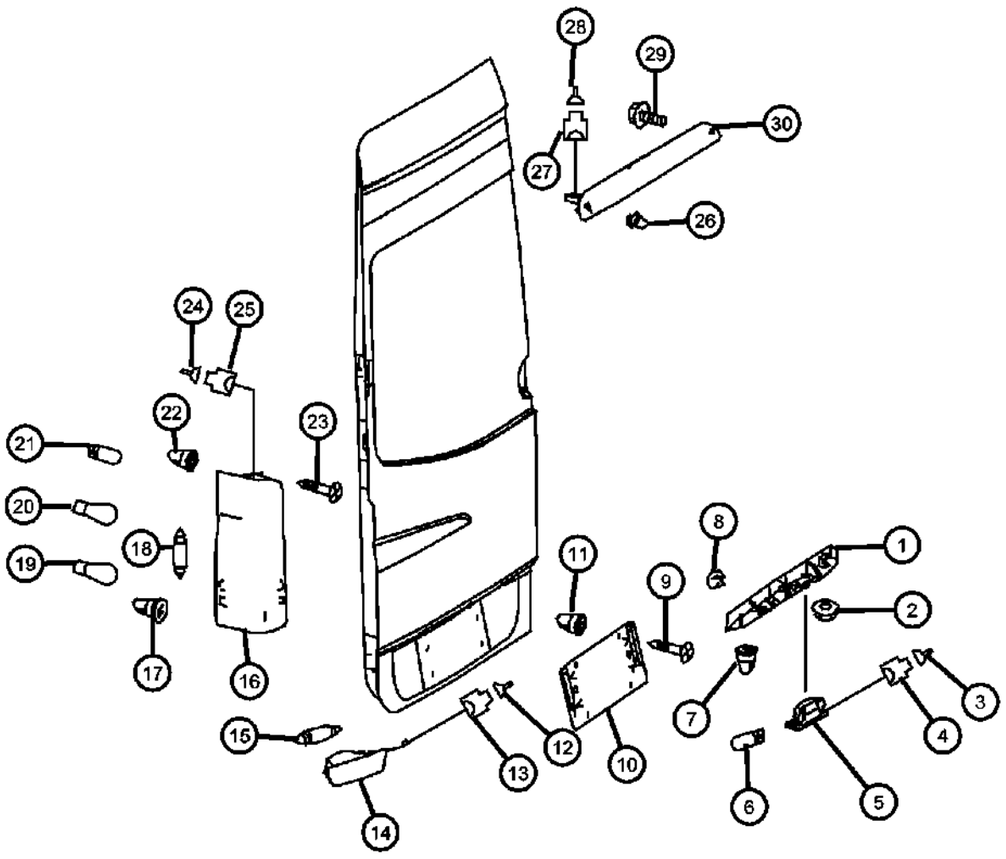

ITEM	PART NUMBER	QTY	LINE	SERIES	BODY	ENGINE	TRANS	TRIM	DESCRIPTION
1	1HE84XDVAA	1	2, 3, 6, 7	L	13, 15, 17, 53, 55	EG2, EXM	DGZ		COVER, Lamp
2	68006505AA	2	2, 3, 6, 7	L	13, 15, 17, 53, 55	EG2, EXM	DGZ		NUT
3	05138912AA	AR	2, 3, 6, 7	L		EG2, EXM	DGZ		TERMINAL, E19/1.E19/2
4	68011339AA	2	2, 3, 6, 7	L		EG2, EXM	DGZ		CONNECTOR, E19/2
5	68006502AA	2	2, 3, 6, 7	L	13, 15, 17, 53, 55	EG2, EXM	DGZ		LAMP, License
6	05104608AA	1	2, 3, 6, 7	L	13, 15, 17, 53, 55	EG2, EXM	DGZ		BULB, 12V 5W, License Plate Lamp 12V-5W
7	68006507AA	4	2, 3, 6, 7	L	13, 15, 17, 53, 55	EG2, EXM	DGZ		RETAINER, Covering to Door
8	68006504AA	3	2, 3, 6, 7	L		EXM, EG2	DGZ		RETAINER, Covering to Door
9									SCREW, Hex Head
	06104632AA	1	2, 3, 6, 7	L	53, 55	EG2, EXM	DGZ		
		4	2, 3, 6, 7	L	13, 15, 17, 53, 55	EG2, EXM	DGZ		
10	68006506AA	1	2, 3, 6, 7	L	13, 15, 17, 53, 55	EG2, EXM	DGZ		BRACKET, Rear License Plate Fastening
11	68006507AA	4	2, 3, 6, 7	L	13, 15, 17, 53, 55	EG2, EXM	DGZ		RETAINER, Rear License Plate Fastening
12	05120860AA	1	2, 3, 6, 7	L		EG2, EXM	DGZ		GASKET
13	05120277AA	1	2, 3, 6, 7	L		EG2, EXM	DGZ		CONNECTOR, Wiring Repair
14									REFLECTOR, NONE, SPRINTER
	68012886AA	1	2, 3, 6, 7	L	13, 15, 17, 53, 55	EG2, EXM	DGZ		Right
	68012887AA	1	2, 3, 6, 7	L	13, 15, 17, 53, 55	EG2, EXM	DGZ		Left
15	L0007506	2	2, 3, 6, 7	L		EG2, EXM	DGZ		BULB, 7506
16									LAMP, Tail Stop Turn
	68012882AA	1	2, 6	L	13, 15, 53, 55, 57	EG2, EXM	DGZ		Right
	68012883AA	1	2, 6	L	13, 15, 53, 55, 57	EG2, EXM	DGZ		Left
17	68012881AA	6	2, 3, 6, 7	L	13, 15, 17, 53, 55	EG2, EXM	DGZ		RETAINER, Attachment Tail Lamp
18	05104647AA	2	2, 3, 6, 7	L	13, 15, 17, 53, 55	EG2, EXM	DGZ		BULB, TAIL LAMP
19	05179070AA	2	2, 3, 6, 7	L		EG2, EXM	DGZ		BULB
20	L0007506	2	2, 3, 6, 7	L		EG2, EXM	DGZ		BULB, 7506

SPRINTER (VB)

SERIES	LINE	BODY	ENGINE	TRANSMISSION
L = LOWLINE	3 = HD DODGE 2WD 6 = Lt. Duty DODGE 4WD 2 = Med. Duty DODGE 2WD 7 = Med. Duty DODGE 4WD	17 = VAN WHEEL BASE 7 55 = WAGON WHEEL BASE 5 15 = VAN WHEEL BASE 5 53 = 119 WB 13 = 119 WB 05 = CAB CHASSIS WHEEL BASE 5 03 = CAB CHASSIS WHEEL BASE 3	EG2 = 3.5L V6 Gas Engine EXM = 3.0L V6 Turbo Diesel Engine	DGZ = 5-Speed Auto W5A380 Transmission

AR = use ase required - = Non illustrrated part

<< RETURN TO GROUP INDEX

Lamps Rear
Figure 8-1111

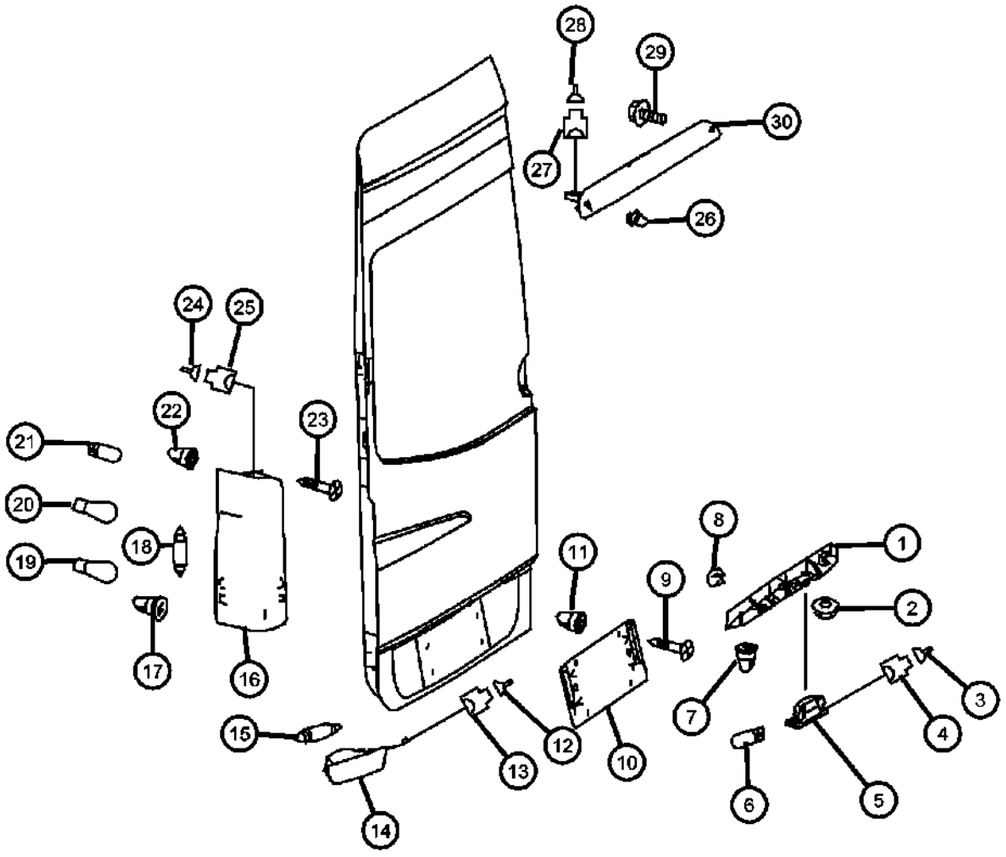

ITEM	PART NUMBER	QTY	LINE	SERIES	BODY	ENGINE	TRANS	TRIM	DESCRIPTION
21	05104649AA	2	2, 3, 6, 7	L		EG2, EXM	DGZ		BULB, Tail Light 12V-5W
22	05098837AB	4	2, 3, 6, 7	L		EG2, EXM	DGZ		NUT, Plastic Snap-in
23	05104609AA	6	2, 3, 6, 7	L	13, 15, 17, 53, 55	EG2, EXM	DGZ		SCREW, Tail Lamp to Body 4.8x13
24	05103892AA	1	2, 3, 6, 7	L		EG2, EXM	DGZ		TERMINAL
25	05138860AA	2	2, 3, 6, 7	L	13, 15, 17, 53, 55	EG2, EXM	DGZ		CONNECTOR, Taillamps 8-PIN;E3,E4, Right & Left
26	05098837AB	2	2, 3, 6, 7	L		EG2, EXM	DGZ		NUT, Plastic Snap-in
27	05138029AA	1	2, 3, 6, 7	L		EG2, EXM	DGZ		CONNECTOR, 3rd.Stop Lamp 2-PIN;E21
28	05103873AA	3	2, 3, 6, 7	L	13, 15, 17, 53, 55	EG2, EXM	DGZ		TERMINAL
29	06104505AA	2	2, 3, 6, 7	L	13, 15, 17, 53, 55	EG2, EXM	DGZ		SCREW, Auxiliary Stop Lamp to Body 4.8x13
30	68012885AA	1	2, 3, 6, 7	L	13, 15, 17, 53, 55	EG2, EXM	DGZ		LAMP, Center High Mounted Stop

SPRINTER (VB)

SERIES	LINE	BODY	ENGINE	TRANSMISSION
L = LOWLINE	3 = HD DODGE 2WD 6 = Lt. Duty DODGE 4WD 2 = Med. Duty DODGE 2WD 7 = Med. Duty DODGE 4WD	17 = VAN WHEEL BASE 7 55 = WAGON WHEEL BASE 5 15 = VAN WHEEL BASE 5 53 = 119 WB 13 = 119 WB 05 = CAB CHASSIS WHEEL BASE 5 03 = CAB CHASSIS WHEEL BASE 3	EG2 = 3.5L V6 Gas Engine EXM = 3.0L V6 Turbo Diesel Engine	DGZ = 5-Speed Auto W5A380 Transmission

Lamps, Interior
Figure 8-1115

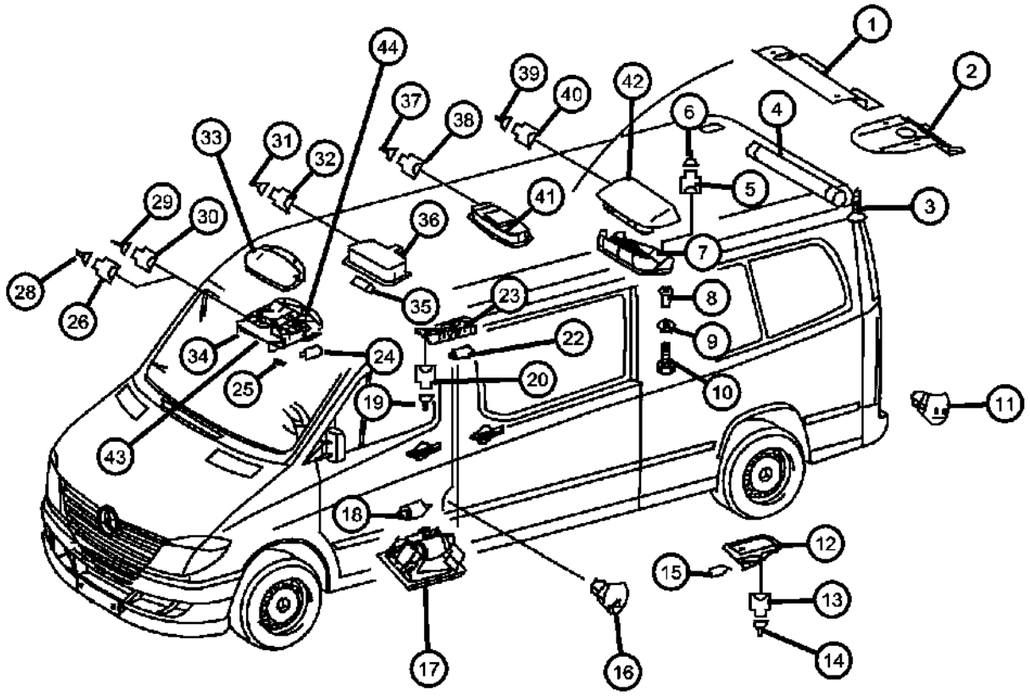

ITEM	PART NUMBER	QTY	LINE	SERIES	BODY	ENGINE	TRANS	TRIM	DESCRIPTION
1	68009780AA	2	2, 3, 6, 7	L	13, 15, 17, 53, 55	EG2, EXM	DGZ		BRACKET, Cargo Lamp
2	68009779AA	2	2, 3, 6, 7	L	15, 17	EG2, EXM	DGZ		BRACKET, Cargo Lamp
3	06104527AA	6	2, 3, 6, 7	L	13, 15, 17, 53, 55	EG2, EXM	DGZ		SCREW
4	05133563AA	2	2, 3, 6, 7	L	13, 15, 17, 53, 55	EG2, EXM	DGZ		BULB, 12V 8W
5	68011322AA	2	2, 3, 6, 7	L		EG2, EXM	DGZ		ISOLATOR, [E17/9 Or E17/10] Front Door Lamp
6	05103871AA	AR	2, 3, 6, 7	L		EG2, EXM	DGZ		TERMINAL, Female
7	68017617AA	1	2, 3, 6, 7	L	13, 15, 17	EG2, EXM	DGZ		BRACKET
8									RIVET, NONE, SPRINTER
	05174643AA	2	2, 3, 6, 7	L	13, 15, 17, 53, 55	EG2, EXM	DGZ		
		2	2, 3, 6, 7	L	53, 55	EG2, EXM	DGZ		
9	05104639AA	1	2, 3, 6, 7	L	13, 15, 17, 53, 55	EG2, EXM	DGZ		WASHER
10	68010354AA	1	2, 3, 6, 7	L	13, 15, 17, 53, 55	EG2, EXM	DGZ		SCREW
11	68011041AA	1	2, 3, 6, 7	L		EG2, EXM	DGZ		POWER OUTLET
12	05103765AA	2	2, 3, 6, 7	L	13, 15, 17, 53, 55	EG2, EXM	DGZ		LAMP, Courtesy
13	05120749AA	1	2, 3, 6, 7	L		EG2, EXM	DGZ		CONNECTOR, Courtesy Lamp 2-PIN
14	05103880AA	AR	2, 3, 6, 7	L		EG2, EXM	DGZ		TERMINAL
15	05104608AA	1	2, 3, 6, 7	L	13, 15, 17, 53, 55	EG2, EXM	DGZ		BULB, 12V 5W, 12V-5W
16	68011041AA	1	2, 3, 6, 7	L		EG2, EXM	DGZ		POWER OUTLET, Seat Case Left,Front
17	68017601AA	2	2, 3, 6, 7	L		EG2, EXM	DGZ		LAMP, Courtesy
18	05096968AB	1	2, 3, 6, 7	L		EG2, EXM	DGZ		BULB, 12V 5W
19	05103920AA	1	2, 3, 6, 7	L		EG2, EXM	DGZ		LINK, Load Sensing
20	05120514AA	AR	2, 3, 6, 7	L		EG2, EXM	DGZ		TERMINAL, Female
-21	68011232AA	1	2, 3, 6, 7	L		EG2, EXM	DGZ		CONNECTOR, Wiring, [4 Pin / E15/3; E15/38]
22	68017600AA	AR	2, 3, 6, 7	L	13, 15, 17, 53, 55	EG2, EXM	DGZ		BULB
23	68017599AA	1	2, 3, 6, 7	L	13, 15, 17, 53, 55	EG2, EXM	DGZ		LAMP, Courtesy
24	05175455AA	4	2, 3, 6, 7	L	13, 15, 17, 53, 55	EG2, EXM	DGZ		BULB, 12V 6W

SPRINTER (VB)

SERIES	LINE	BODY	ENGINE	TRANSMISSION
L = LOWLINE	3 = HD DODGE 2WD 6 = Lt. Duty DODGE 4WD 2 = Med. Duty DODGE 2WD 7 = Med. Duty DODGE 4WD	17 = VAN WHEEL BASE 7 55 = WAGON WHEEL BASE 5 15 = VAN WHEEL BASE 5 53 = 119 WB 13 = 119 WB 05 = CAB CHASSIS WHEEL BASE 5 03 = CAB CHASSIS WHEEL BASE 3	EG2 = 3.5L V6 Gas Engine EXM = 3.0L V6 Turbo Diesel Engine	DGZ = 5-Speed Auto W5A380 Transmission

AR = use ase required - = Non illustrrated part

<< RETURN TO GROUP INDEX

Lamps, Interior
Figure 8-1115

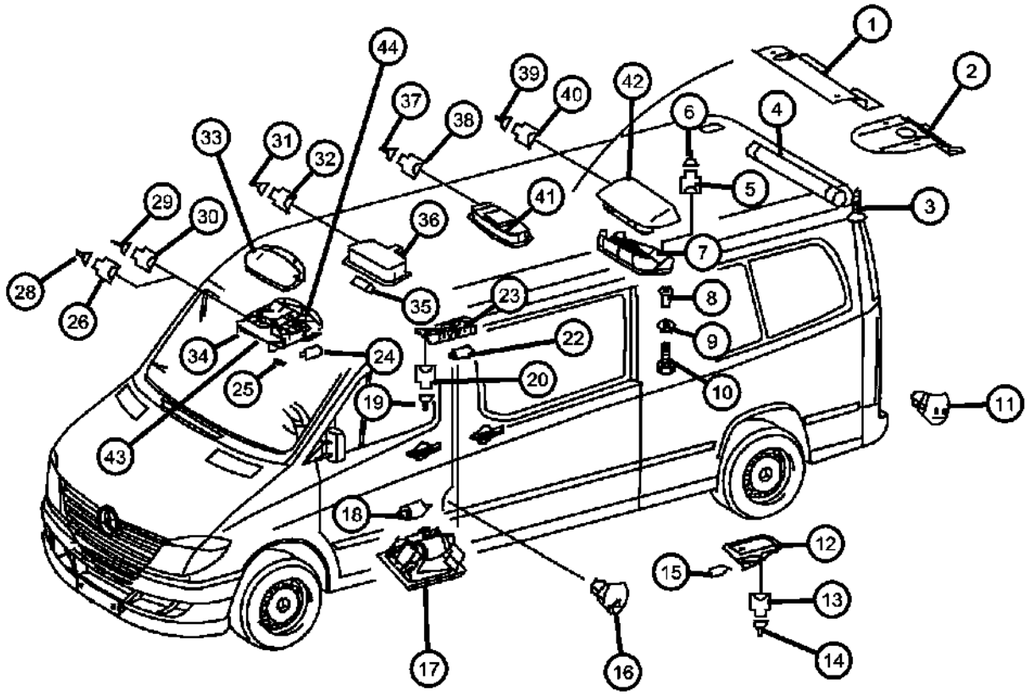

ITEM	PART NUMBER	QTY	LINE	SERIES	BODY	ENGINE	TRANS	TRIM	DESCRIPTION
25	05101488AA	4	2, 3, 6, 7	L	13, 15, 17, 53, 55	EG2, EXM	DGZ		SOCKET, Instrument Cluster
26									CONNECTOR, Wiring
	68011262AA	1	2, 3, 6, 7	L		EG2, EXM	DGZ		Overhead Control Panel, Blue
	68011265AA	1	2, 3, 6, 7	L		EG2, EXM	DGZ		Overhead Control Panel,Transparent
-27	68011264AA	1	2, 3, 6, 7	L		EG2, EXM	DGZ		CONNECTOR, [6 Pin N70]
28									TERMINAL
	05103873AA	3	3, 7	L	03, 05	EG2, EXM	DGZ		
		3	2, 3, 6, 7	L	13, 15, 17, 53, 55	EG2, EXM	DGZ		
29									TERMINAL
	05103873AA	3	3, 7	L	03, 05	EG2, EXM	DGZ		
		3	2, 3, 6, 7	L	13, 15, 17, 53, 55	EG2, EXM	DGZ		
30	05101166AA	1	2, 3, 6, 7	L		EG2, EXM	DGZ		CONNECTOR
31	05103882AA	1	2, 3, 6, 7	L					TERMINAL
32	05120545AA	1	2, 3, 6, 7	L		EXM, EG2	DGZ		CONNECTOR, Dome Lamp,Front
33	68017602AA	1	2, 3, 6, 7	L		EG2, EXM	DGZ		COVER
34	68017604AA	1	2, 3, 6, 7	L		EG2, EXM	DGZ		LAMP, Front Combination
35	05104645AA	1	2, 3, 6, 7	L	13, 15, 17, 53, 55	EG2, EXM	DGZ		BULB
36	05104459AA	1	2, 3, 6, 7	L		EG2, EXM	DGZ		LAMP, Cargo
37	05120514AA	AR	2, 3, 6, 7	L		EG2, EXM	DGZ		TERMINAL, Female
38	68011322AA	2	2, 3, 6, 7	L		EG2, EXM	DGZ		ISOLATOR, [E15/35] Loading Compartment Lamp
39									TERMINAL
	05103873AA	3	3, 7	L	03, 05	EG2, EXM	DGZ		
		3	2, 3, 6, 7	L	13, 15, 17, 53, 55	EG2, EXM	DGZ		
40	68011235AA	1	2, 3, 6, 7	L		EG2, EXM	DGZ		CONNECTOR, [6 Pin / B27/1]
41	68017598AA	1	2, 3, 6, 7	L	13, 15, 17, 53, 55	EG2, EXM	DGZ		LAMP, Courtesy
42	68017616AA	1	2, 3, 6, 7	L	13, 15, 17	EG2, EXM	DGZ		SENSOR, Loading Compartment Lamp
43	04862636AA	1	2, 3, 6, 7	L		EG2, EXM	DGZ		LAMP, Front Combination, With [CUN+NHW]

SPRINTER (VB)

SERIES	LINE	BODY	ENGINE	TRANSMISSION
L = LOWLINE	3 = HD DODGE 2WD 6 = Lt. Duty DODGE 4WD 2 = Med. Duty DODGE 2WD 7 = Med. Duty DODGE 4WD	17 = VAN WHEEL BASE 7 55 = WAGON WHEEL BASE 5 15 = VAN WHEEL BASE 5 53 = 119 WB 13 = 119 WB 05 = CAB CHASSIS WHEEL BASE 5 03 = CAB CHASSIS WHEEL BASE 3	EG2 = 3.5L V6 Gas Engine EXM = 3.0L V6 Turbo Diesel Engine	DGZ = 5-Speed Auto W5A380 Transmission

AR = use ase required - = Non illustrrated part

<< RETURN TO GROUP INDEX

Lamps, Interior
Figure 8-1115

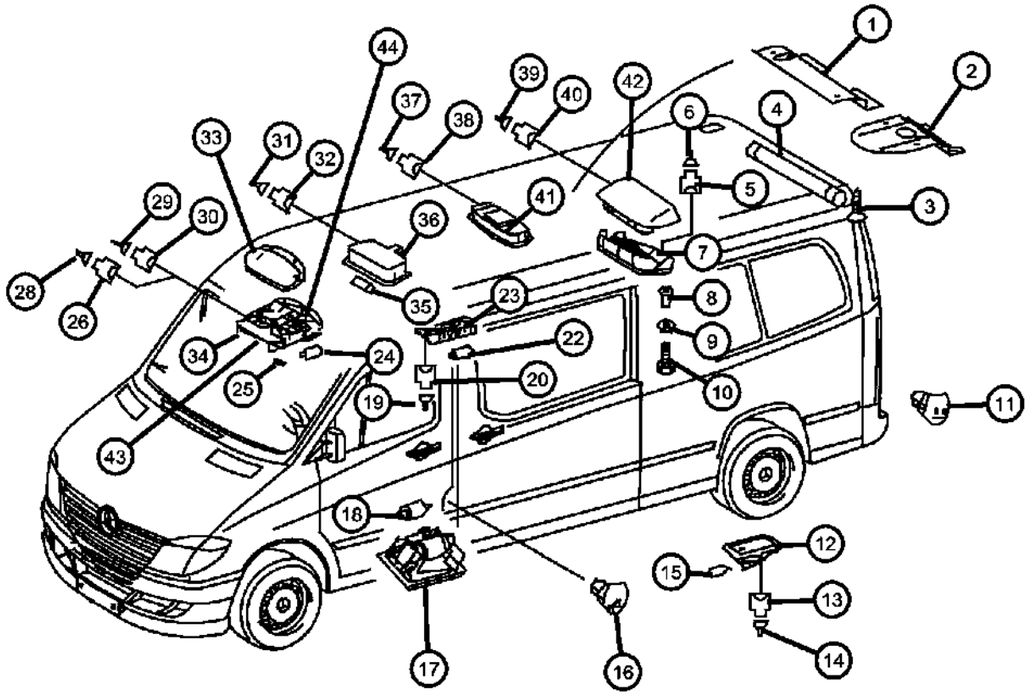

ITEM	PART NUMBER	QTY	LINE	SERIES	BODY	ENGINE	TRANS	TRIM	DESCRIPTION
44									CONSOLE, Overhead
	68004968AA	1	2, 3, 6, 7	L		EG2, EXM	DGZ		With [GWA Or GW9+NHW Or CUN]
	68004970AA	1	2, 3, 6, 7	L		EG2, EXM	DGZ		With [CUN+NHW+LSA]
	68004971AA	1	2, 3, 6, 7	L		EG2, EXM	DGZ		With [GWA Or GW9+LSA+NHW+CUN]

SPRINTER (VB)

SERIES	LINE	BODY	ENGINE	TRANSMISSION
L = LOWLINE	3 = HD DODGE 2WD 6 = Lt. Duty DODGE 4WD 2 = Med. Duty DODGE 2WD 7 = Med. Duty DODGE 4WD	17 = VAN WHEEL BASE 7 55 = WAGON WHEEL BASE 5 15 = VAN WHEEL BASE 5 53 = 119 WB 13 = 119 WB 05 = CAB CHASSIS WHEEL BASE 5 03 = CAB CHASSIS WHEEL BASE 3	EG2 = 3.5L V6 Gas Engine EXM = 3.0L V6 Turbo Diesel Engine	DGZ = 5-Speed Auto W5A380 Transmission

Clearance Roof Lamps
Figure 8-1120

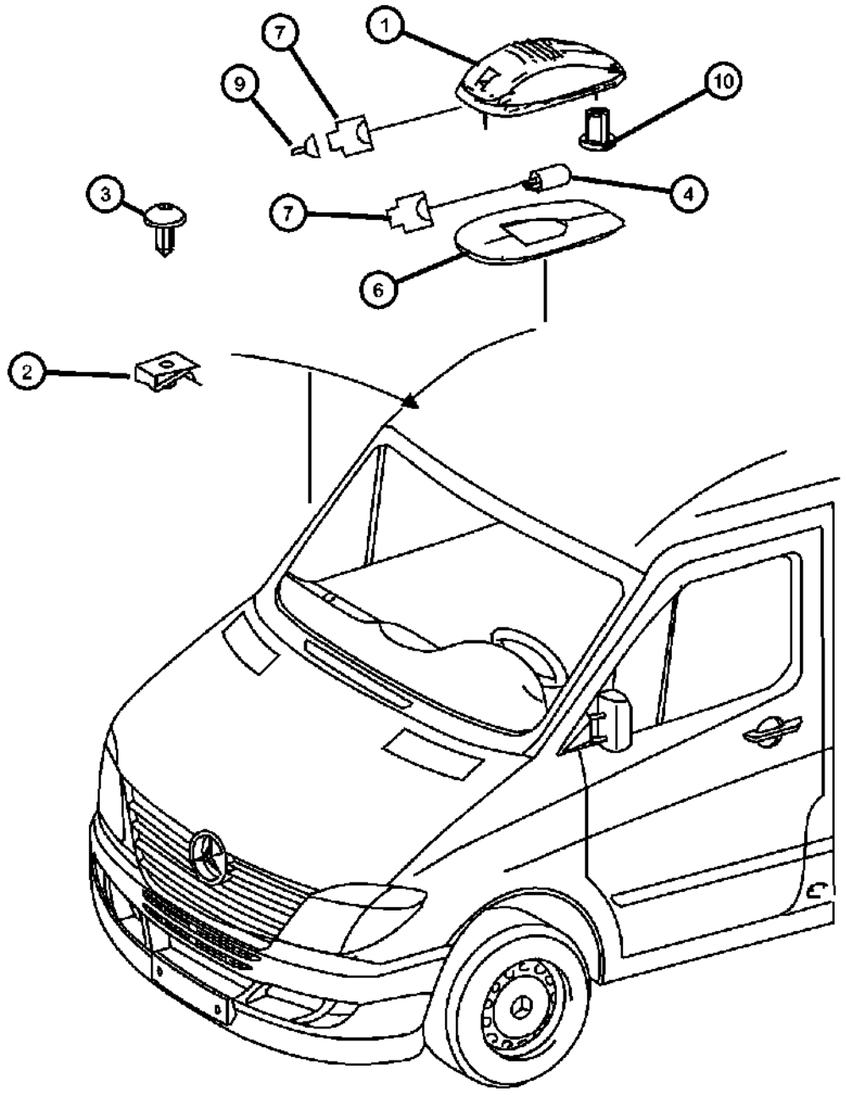

ITEM	PART NUMBER	QTY	LINE	SERIES	BODY	ENGINE	TRANS	TRIM	DESCRIPTION
1	55077559AD	3	3, 7	L	03, 05	EG2, EXM	DGZ		LAMP, Cab
2	55077559AD	3							CLIP, Instrument Panel, (NOT SERVICED)
3	06104565AA	2	2, 3, 6, 7	L		EG2, EXM	DGZ		SCREW
4	05104608AA	5	3, 7	L	03, 05	EG2, EXM	DGZ		BULB, 12V 5W
-5	68012129AA	2	2, 3, 6, 7	L		EG2, EXM	DGZ		BULB
6	68012156AA	5	3, 7	L	03, 05	EG2, EXM	DGZ		GASKET
7	05103655AA	6	3, 7	L	03, 05	EG2, EXM	DGZ		SOCKET, Roof Lamp
-8	05103754AA	1	2, 3, 6, 7	L		EG2, EXM	DGZ		INSULATOR, 2 Way Female
9	05133359AA	AR	2, 3, 6, 7	L		EG2, EXM	DGZ		TERMINAL, Female, [0.5 - 1.0 MM2; 6.3; E46/1, E46/2, E46/3]
10	68038097AA	6	3, 7	L	03, 05	EG2, EXM	DGZ		RETAINER

SPRINTER (VB)

SERIES	LINE	BODY	ENGINE	TRANSMISSION
L = LOWLINE	3 = HD DODGE 2WD 6 = Lt. Duty DODGE 4WD 2 = Med. Duty DODGE 2WD 7 = Med. Duty DODGE 4WD	17 = VAN WHEEL BASE 7 55 = WAGON WHEEL BASE 5 15 = VAN WHEEL BASE 5 53 = 119 WB 13 = 119 WB 05 = CAB CHASSIS WHEEL BASE 5 03 = CAB CHASSIS WHEEL BASE 3	EG2 = 3.5L V6 Gas Engine EXM = 3.0L V6 Turbo Diesel Engine	DGZ = 5-Speed Auto W5A380 Transmission

AR = use ase required - = Non illustrrated part

Headlamp To Dash / Body Harness
Figure 8-1302

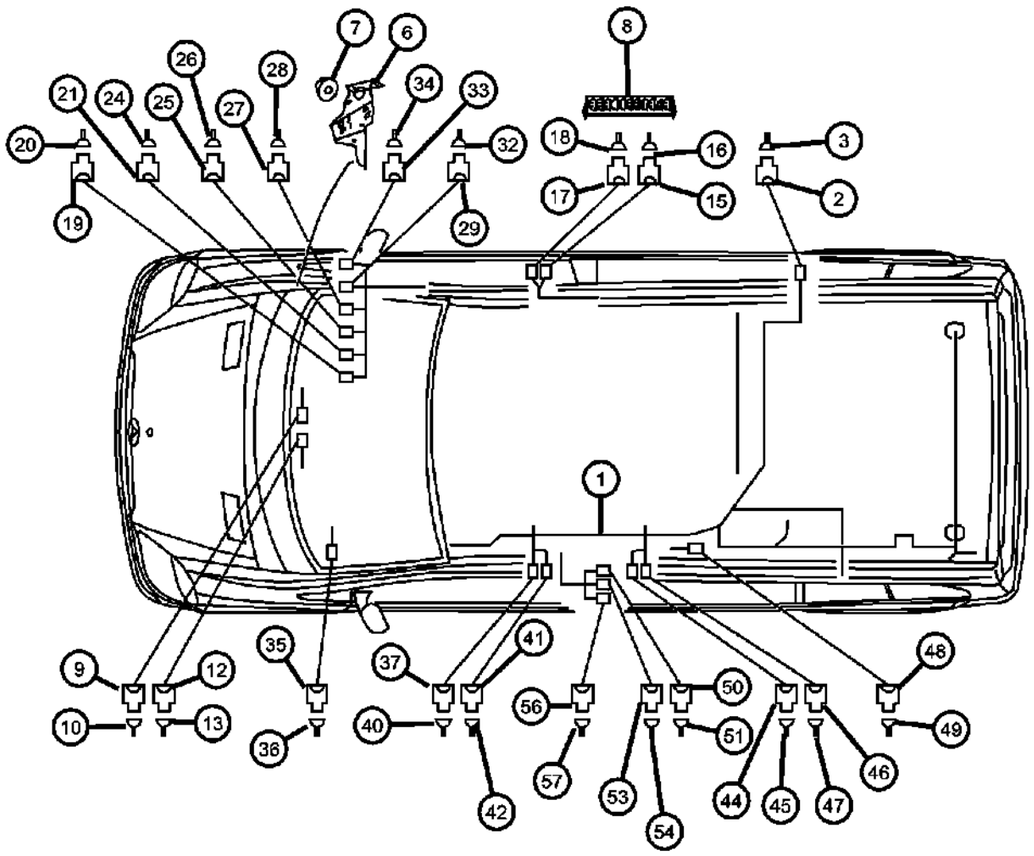

ITEM	PART NUMBER	QTY	LINE	SERIES	BODY	ENGINE	TRANS	TRIM	DESCRIPTION
1	68013432AA	1	2, 3, 6, 7	L		EG2, EXM	DGZ		WIRING, Body
2	68011283AA	1	2, 3, 6, 7	L		EG2, EXM	DGZ		CONNECTOR, Tank Connector [8 Pin SLK 2.8, X25/15]
3									TERMINAL
	05133353AA	AR	2, 3, 6, 7	L		EG2	DGZ		[0.75 - 1.0 MM2 SLK 2.8 X25/15]
		AR	2, 3, 6, 7	L		EXM	DGZ		[0.75 - 1.0 MM2 SLK 2.8 X25/15]
-4									TERMINAL
	05103877AA	AR	2, 3, 6, 7	L		EG2	DGZ		[1.5 - 2.5 MM2 SLK 2.8, X25 / 15]
		AR	2, 3, 6, 7	L		EXM	DGZ		[1.5 - 2.5 MM2 SLK 2.8, X25 / 15]
-5	05103663AA	AR	2, 3, 6, 7	L		EG2	DGZ		GROMMET
6	68013391AA	1	2, 3, 6, 7	L		EG2, EXM	DGZ		BRACKET, Can Connector To [A] Pillar Right
7									NUT
	68004878AA	3	2, 3, 6, 7	L	53, 55	EG2, EXM	DGZ		
		2	2, 3, 6, 7	L	13, 15, 17, 53, 55	EG2, EXM	DGZ		
8	68015320AA	1	2, 3, 6, 7	L		EXM, EG2	DGZ		CONNECTOR, Potential Distribuitor [22 Pin]
9	05120277AA	1	2, 3, 6, 7	L		EG2, EXM	DGZ		CONNECTOR, Wiring Repair, Connector Transmission Neutral [2 Pin MQS; X162]
10	05103874AA	1	2, 3, 6, 7	L		EG2, EXM	DGZ		TERMINAL, [0.75 MM2]
-11	05120860AA	1	2, 3, 6, 7	L		EG2, EXM	DGZ		GASKET, [1.6 - 1.9 MM2, X162]
12	05142197AA	2	2, 3, 6, 7	L		EG2, EXM	DGZ		INSULATOR, 2 Way, Connector Transmission Neutral [2 Pin, X162]
13	05142198AA	1	2, 3, 6, 7	L		EG2, EXM	DGZ		TERMINAL, [0.75 MM2]
-14	05120860AA	1	2, 3, 6, 7	L		EG2, EXM	DGZ		GASKET, [1.6 - 1.9 MM2, X162]
15	05101166AA	1	2, 3, 6, 7	L		EG2, EXM	DGZ		CONNECTOR, Can [B] Voltage Distributor [2 Pin MQS, X30]
16	05103873AA	AR	2, 3, 6, 7	L		EG2, EXM	DGZ		TERMINAL, [0.75 MM2]
17									CONNECTOR
	68011269AA	1	2, 3, 6, 7	L		EG2, EXM	DGZ		Can Bus [C] [2 Pin MQS, X30]
	68011270AA	1	2, 3, 6, 7	L		EG2, EXM	DGZ		Can Bus [C] [3 Pin MQS, X30]
18	05103873AA	AR	2, 3, 6, 7	L		EG2, EXM	DGZ		TERMINAL, [0.75 MM2]
19	05120260AA	1	2, 3, 6, 7	L	13, 15, 17, 53, 55	EG2, EXM	DGZ		INSULATOR, 6 Way, Cockpit Interior Plug Connector [6 Pin, X169/7]

SPRINTER (VB)

SERIES	LINE	BODY	ENGINE	TRANSMISSION
L = LOWLINE	3 = HD DODGE 2WD 6 = Lt. Duty DODGE 4WD 2 = Med. Duty DODGE 2WD 7 = Med. Duty DODGE 4WD	17 = VAN WHEEL BASE 7 55 = WAGON WHEEL BASE 5 15 = VAN WHEEL BASE 5 53 = 119 WB 13 = 119 WB 05 = CAB CHASSIS WHEEL BASE 5 03 = CAB CHASSIS WHEEL BASE 3	EG2 = 3.5L V6 Gas Engine EXM = 3.0L V6 Turbo Diesel Engine	DGZ = 5-Speed Auto W5A380 Transmission

AR = use ase required - = Non illustrrated part

<< RETURN TO GROUP INDEX

Headlamp To Dash / Body Harness
Figure 8-1302

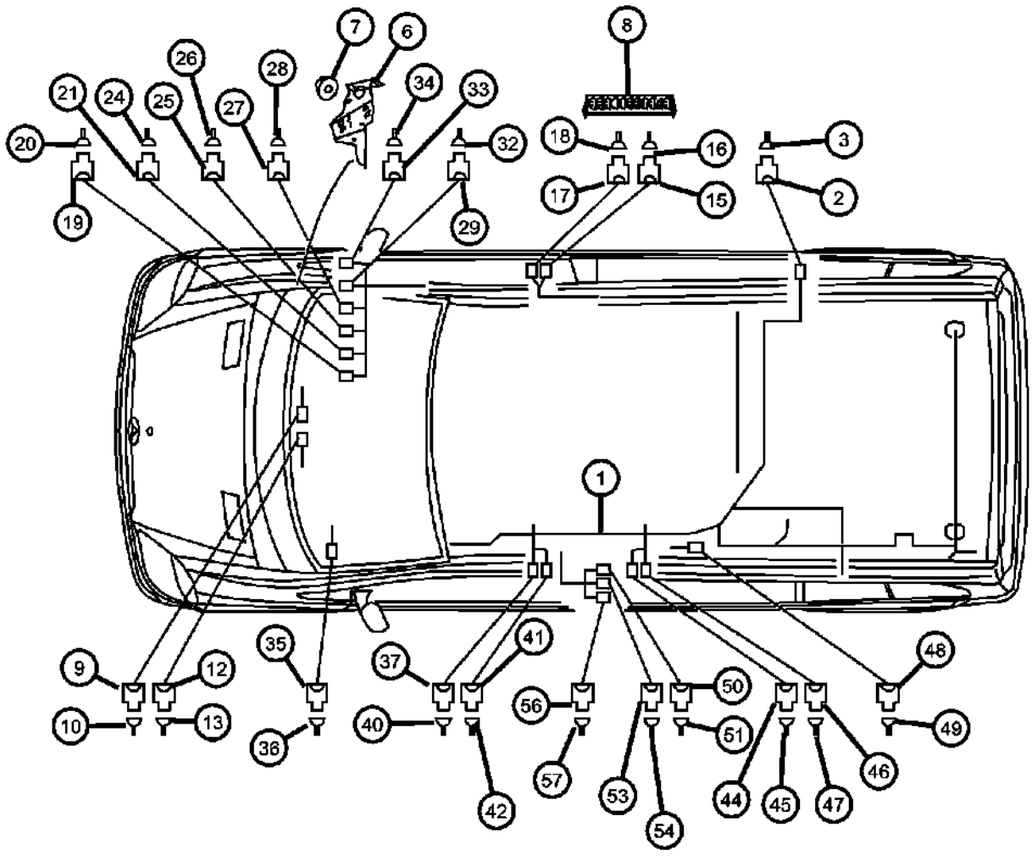

ITEM	PART NUMBER	QTY	LINE	SERIES	BODY	ENGINE	TRANS	TRIM	DESCRIPTION
20	05103873AA	AR	2, 3, 6, 7	L		EG2, EXM	DGZ		TERMINAL, [0.75 MM2]
21	68011209AA	1	2, 3, 6, 7	L		EG2, EXM	DGZ		CONNECTOR, Cockpit Interior Plug Connector [28 Pin MQS, X18/56]
-22	68016738AA	1	2, 3, 6, 7	L		EG2, EXM	DGZ		CONNECTOR, Cover For Call Out [21]
-23	68016739AA	1	2, 3, 6, 7	L		EG2, EXM	DGZ		CONNECTOR, Wiring, Cap For Callout [21]
24	05103873AA	AR	2, 3, 6, 7	L		EG2, EXM	DGZ		TERMINAL, [0.75 MM2]
25	68011252AA	1	2, 3, 6, 7	L		EG2, EXM	DGZ		CONNECTOR, Cockpit Interior Connector [14 Pin, X18/49]
26	68016713AA	AR	2, 3, 6, 7	L		EG2, EXM	DGZ		TERMINAL, [4.0 MM2; SLK 2.8, X18/49]
27	05120727AA	1	2, 3, 6, 7	L		EG2, EXM	DGZ		CONNECTOR, Cockpit Interior Plug Connector [18 Pin MQS; X18/55]
28	05103873AA	AR	2, 3, 6, 7	L		EG2, EXM	DGZ		TERMINAL, [0.75 MM2]
29	68016716AA	1	2, 3, 6, 7	L		EG2, EXM	DGZ		CONNECTOR, Wiring, Cockpit Interior Plug Connector [10 Pin; X18/60]
-30	68016717AA	1	2, 3, 6, 7	L		EG2, EXM	DGZ		COVER, Cover For Callout [29]
-31	68016718AA	1	2, 3, 6, 7	L		EG2, EXM	DGZ		CONNECTOR, Contact Carrier [10 Pin MQS] For Callout [29]
32	05103873AA	AR	2, 3, 6, 7	L		EG2, EXM	DGZ		TERMINAL, [0.75 MM2]
33	68011253AA	1	2, 3, 6, 7	L		EG2, EXM	DGZ		CONNECTOR, Cockpit Interior Plug Connector [4 Pin SLK 2.8; X18/64]
34	05143897AA	AR	2, 3, 6, 7	L		EG2, EXM	DGZ		TERMINAL, [1.5 - 2.5 MM2; SLK 2.8, X18/64]
35	05143907AA	1	2, 3, 6, 7	L		EG2, EXM	DGZ		CONNECTOR, Cockpit Plug Connector [1 Pin SLK 8, X4/49]
36	68016737AA	AR	2, 3, 6, 7	L		EG2, EXM	DGZ		TERMINAL, [6.0 - 10.0 MM2; X4/49]
37	68011209AA	1	2, 3, 6, 7	L		EG2, EXM	DGZ		CONNECTOR, Interior Roof Connector [28 Pin; MQS, X18/52]
-38	68016738AA	1	2, 3, 6, 7	L		EG2, EXM	DGZ		CONNECTOR, Cover For Callout [37]
-39	68016739AA	1	2, 3, 6, 7	L		EG2, EXM	DGZ		CONNECTOR, Wiring, Cap For Callout [37]
40	05133990AA	99	2, 3, 6, 7	L	13, 15, 17, 53, 55	EG2, EXM	DGZ		TERMINAL, Male, [0.75 MM2]

SPRINTER (VB)

SERIES	LINE	BODY	ENGINE	TRANSMISSION
L = LOWLINE	3 = HD DODGE 2WD 6 = Lt. Duty DODGE 4WD 2 = Med. Duty DODGE 2WD 7 = Med. Duty DODGE 4WD	17 = VAN WHEEL BASE 7 55 = WAGON WHEEL BASE 5 15 = VAN WHEEL BASE 5 53 = 119 WB 13 = 119 WB 05 = CAB CHASSIS WHEEL BASE 5 03 = CAB CHASSIS WHEEL BASE 3	EG2 = 3.5L V6 Gas Engine EXM = 3.0L V6 Turbo Diesel Engine	DGZ = 5-Speed Auto W5A380 Transmission

AR = use ase required - = Non illustrrated part

<< RETURN TO GROUP INDEX

Headlamp To Dash / Body Harness
Figure 8-1302

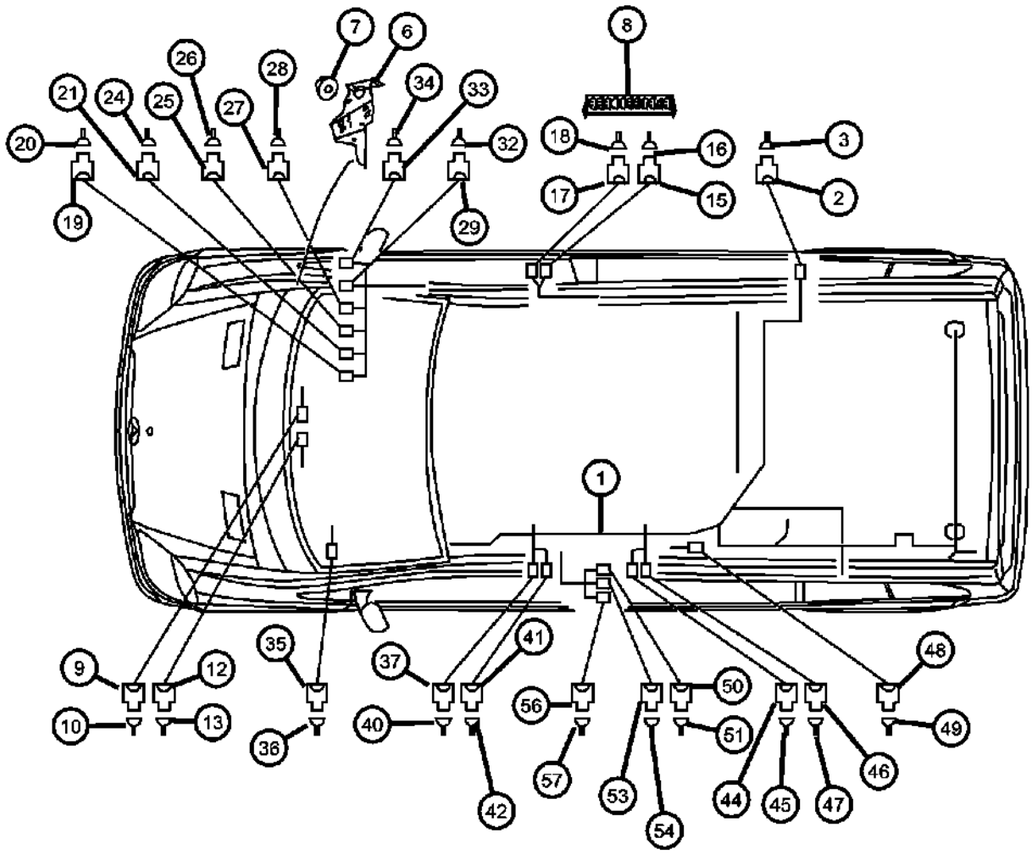

ITEM	PART NUMBER	QTY	LINE	SERIES	BODY	ENGINE	TRANS	TRIM	DESCRIPTION
41	68011252AA	1	2, 3, 6, 7	L		EG2, EXM	DGZ		CONNECTOR, Interior Roof Connector [14 Pin; X18/53]
42	05133945AA	AR	2, 3, 6, 7	L		EG2, EXM	DGZ		TERMINAL, [0.75 - 1.0 MM2]
-43	68016713AA	AR	2, 3, 6, 7	L		EG2, EXM	DGZ		TERMINAL, [4.0 MM2; SLK 2.8, X18/53]
44	05143907AA	1	2, 3, 6, 7	L		EG2, EXM	DGZ		CONNECTOR, Connector Roof Air Conditiontioning [1 Pin]
45	68016737AA	AR	2, 3, 6, 7	L		EG2, EXM	DGZ		TERMINAL, [6.0 - 10.0 MM2; X53/8]
46	05143907AA	1	2, 3, 6, 7	L		EG2, EXM	DGZ		CONNECTOR, Connector Roof Airconditioner [1 Pin; LSK 8, X53/8]
47	68016737AA	AR	2, 3, 6, 7	L		EG2, EXM	DGZ		TERMINAL, [6.0 - 10.0 MM2; X53/9]
48	05120618AA	2	2, 3, 6, 7	L		EG2, EXM	DGZ		INSULATOR, Stationary Heater Plug Connector [7 Pin; X72/10]
49	05133386AA	1	2, 3, 6, 7	L		EG2, EXM	DGZ		TERMINAL, Female, Contact Spring
50	05143912AA	1	2, 3, 6, 7	L		EG2, EXM	DGZ		CONNECTOR, Connector Low Frame [6 Pin, X176/1]
51	05103874AA	1	2, 3, 6, 7	L		EG2, EXM	DGZ		TERMINAL, [0.75 MM2 MQS, X176/1]
-52	05120860AA	1	2, 3, 6, 7	L		EG2, EXM	DGZ		GASKET, [1.6 - 1.9 MM2; X176/1]
53	68011301AA	1	2, 3, 6, 7	L		EG2, EXM	DGZ		CONNECTOR, Connector Low Frame [6 Pin, COD. [B] X176/2]
54	05103874AA	1	2, 3, 6, 7	L		EG2, EXM	DGZ		TERMINAL, [0.75 MM2]
-55	05120860AA	1	2, 3, 6, 7	L		EG2, EXM	DGZ		GASKET, [1.6 - 1.9 MM2; X176/2]
56	05120768AA	1	2, 3, 6, 7	L		EG2, EXM	DGZ		INSULATOR, FEMALE, Connector Low Frame [18P] [X176/3]
57	05174907AA	99	2, 3, 6, 7	L		EG2, EXM	DGZ		TERMINAL, [0.75 - 1.0 MM2; X176/3]
-58	05103663AA	AR	2, 3, 6, 7	L		EG2	DGZ		GROMMET, [0.25 - 1.0 MM2; X176/3]
-59	05120865AA	1	2, 3, 6, 7	L		EG2, EXM	DGZ		GASKET, Dummy Plug [X176/3]

SPRINTER (VB)

SERIES	LINE	BODY	ENGINE	TRANSMISSION
L = LOWLINE	3 = HD DODGE 2WD 6 = Lt. Duty DODGE 4WD 2 = Med. Duty DODGE 2WD 7 = Med. Duty DODGE 4WD	17 = VAN WHEEL BASE 7 55 = WAGON WHEEL BASE 5 15 = VAN WHEEL BASE 5 53 = 119 WB 13 = 119 WB 05 = CAB CHASSIS WHEEL BASE 5 03 = CAB CHASSIS WHEEL BASE 3	EG2 = 3.5L V6 Gas Engine EXM = 3.0L V6 Turbo Diesel Engine	DGZ = 5-Speed Auto W5A380 Transmission

AR = use ase required - = Non illustrrated part

<< RETURN TO GROUP INDEX

Wiring Instrument Panel
Figure 8-1405

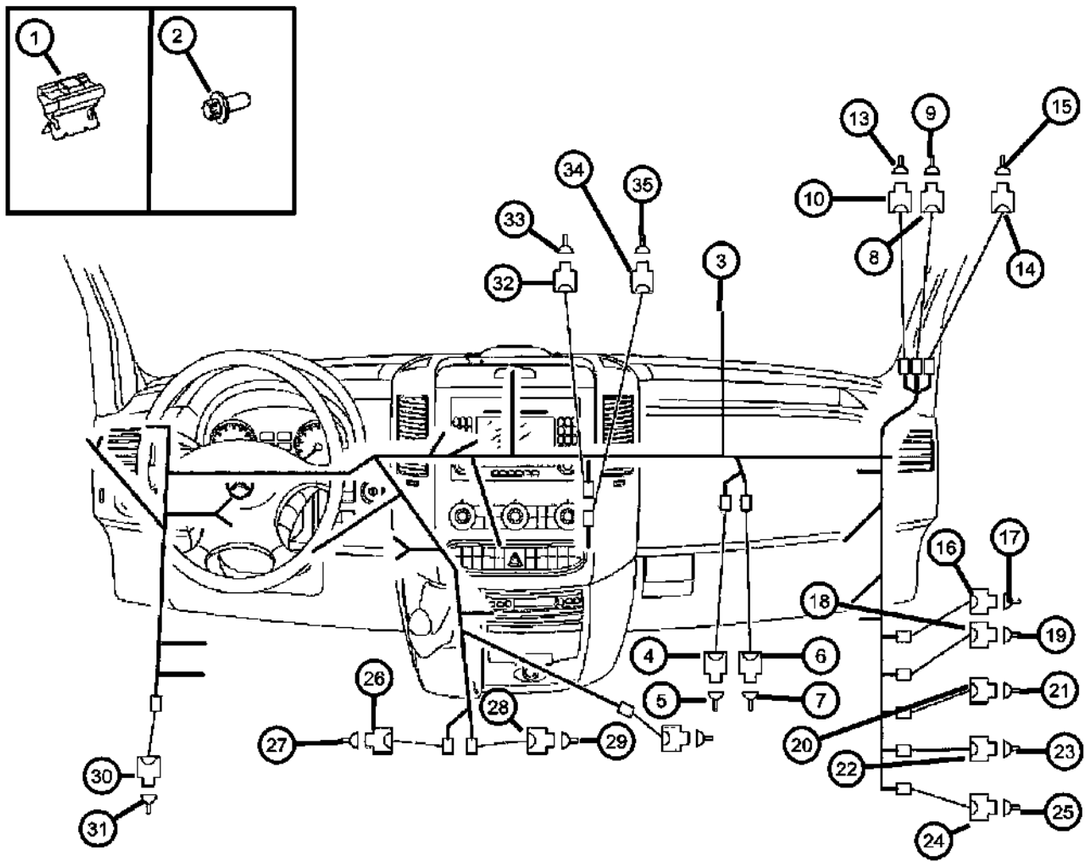

ITEM	PART NUMBER	QTY	LINE	SERIES	BODY	ENGINE	TRANS	TRIM	DESCRIPTION
1	05159403AA	1	2, 3, 6, 7	L		EG2, EXM	DGZ		BRACKET, Harness To Side Member
2	05073723AB	1	2, 3, 6, 7	L		EXM	DGZ		SCREW
3	68013433AA	1	2, 3, 6, 7	L		EG2, EXM	DGZ		WIRING, Instrument Panel
4	68011328AA	1	2, 3, 6, 7	L		EG2, EXM	DGZ		CONNECTOR, Wiring, [2 Pin ; X28/46]
5	68016728AA	AR	2, 3, 6, 7	L		EG2, EXM	DGZ		TERMINAL, [X28/46]
6	68011280AA	1	2, 3, 6, 7	L		EG2, EXM	DGZ		CONNECTOR, Wiring, [2 Pin; X28/46]
7	68016727AA	AR	2, 3, 6, 7	L		EG2, EXM	DGZ		TERMINAL, [X28/46]
8									CONNECTOR
	68011254AA	1	2, 3, 6, 7	L	13, 15, 17	EG2, EXM	DGZ		Cockpit Roof Connector [6 Pin; X18 / 23]
		1	2, 3, 6, 7	L	03, 05, 53, 55	EG2, EXM	DGZ		Cockpit Roof Connector [6 Pin; X18 / 23]
9	05143897AA	AR	2, 3, 6, 7	L		EG2, EXM	DGZ		TERMINAL, [1.0 - 2.5 MM2: X18/23]
10	68011209AA	1	2, 3, 6, 7	L		EG2, EXM	DGZ		CONNECTOR, Cockpit Connector Roof [28 Pin; X18/51]
-11	68016738AA	1	2, 3, 6, 7	L		EG2, EXM	DGZ		CONNECTOR, Cover For Callout [# 10]
-12	68016739AA	1	2, 3, 6, 7	L		EG2, EXM	DGZ		CONNECTOR, Wiring, Cover Cap To Callout [#10]
13									TERMINAL
	05103873AA	3	3, 7	L	03, 05	EG2, EXM	DGZ		[0.75 MM2 MQS; X18/51]
		3	2, 3, 6, 7	L	13, 15, 17, 53, 55	EG2, EXM	DGZ		[0.75 MM2 MQS; X18/51]
14	05103754AA	1	2, 3, 6, 7	L		EG2, EXM	DGZ		INSULATOR, 2 Way Female, Cockpit Connector Roof [2 Pin; X85/22]
15	05133359AA	AR	2, 3, 6, 7	L		EG2, EXM	DGZ		TERMINAL, Female, [0.5 - 1.0 MM2; / 6.3; X85/22]
16									INSULATOR, 6 Way
	05120260AA	1	2, 3, 6, 7	L	13, 15, 17, 53, 55	EG2, EXM	DGZ		Cockpit / Interior Plug [6-Pin; X169/7]
		1	3, 7	L	03, 05	EG2, EXM	DGZ		Cockpit / Interior Plug [6-Pin; X169/7]
17									TERMINAL, Male
	05133990AA	99	2, 3, 6, 7	L	13, 15, 17, 53, 55	EG2, EXM	DGZ		[0.75 MM2; X169/7]
		99	3, 7	L	03, 05	EG2, EXM	DGZ		[0.75 MM2; X169/7]

SPRINTER (VB)

SERIES	LINE	BODY	ENGINE	TRANSMISSION
L = LOWLINE	3 = HD DODGE 2WD 6 = Lt. Duty DODGE 4WD 2 = Med. Duty DODGE 2WD 7 = Med. Duty DODGE 4WD	17 = VAN WHEEL BASE 7 55 = WAGON WHEEL BASE 5 15 = VAN WHEEL BASE 5 53 = 119 WB 13 = 119 WB 05 = CAB CHASSIS WHEEL BASE 5 03 = CAB CHASSIS WHEEL BASE 3	EG2 = 3.5L V6 Gas Engine EXM = 3.0L V6 Turbo Diesel Engine	DGZ = 5-Speed Auto W5A380 Transmission

AR = use ase required - = Non illustrrated part

<< RETURN TO GROUP INDEX

Wiring Instrument Panel
Figure 8-1405

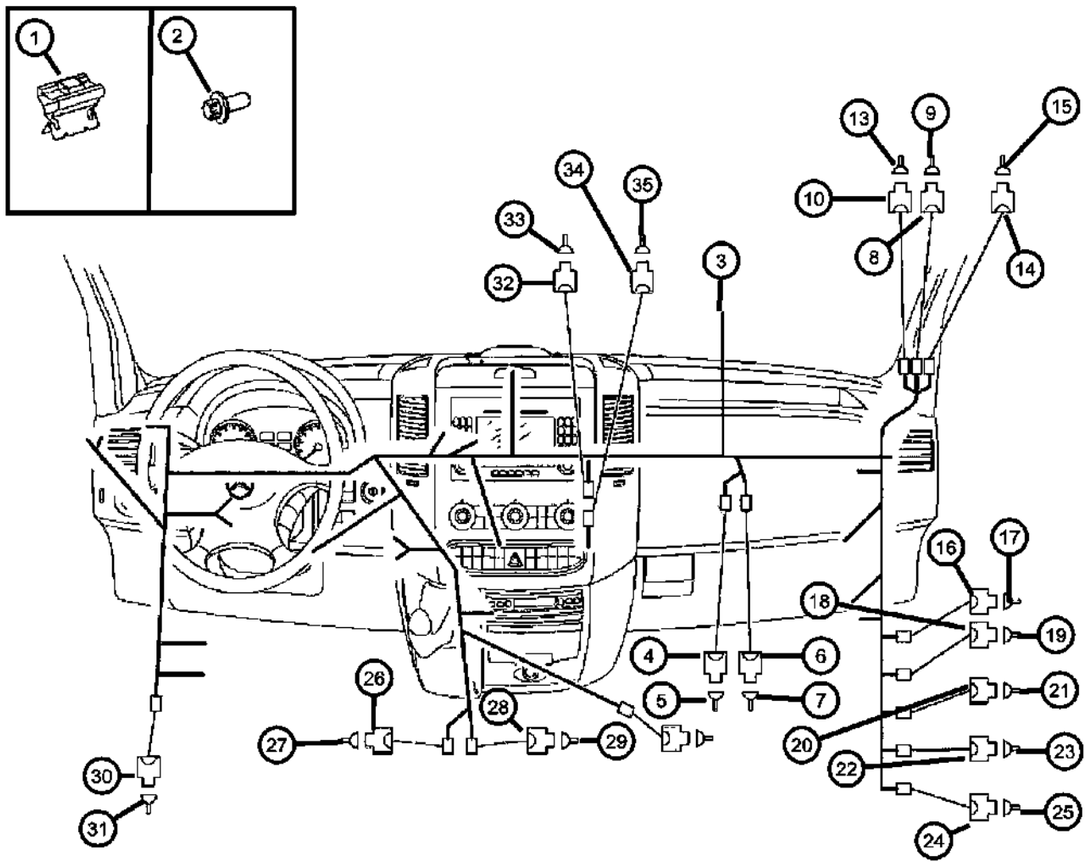

ITEM	PART NUMBER	QTY	LINE	SERIES	BODY	ENGINE	TRANS	TRIM	DESCRIPTION
18	68011342AA	1	2, 3, 6, 7	L		EG2, EXM	DGZ		CONNECTOR, [28 Pin; x18/56]
19									TERMINAL, Male
	05133990AA	99	2, 3, 6, 7	L	13, 15, 17, 53, 55	EG2, EXM	DGZ		[0.75 MM2; X18/56]
		99	3, 7	L	03, 05	EG2, EXM	DGZ		[0.75 MM2; X18/56]
20	68011327AA	1	2, 3, 6, 7	L		EG2, EXM	DGZ		CONNECTOR, Wiring, [18 Pin;X15/55]
21									TERMINAL, Male
	05133990AA	99	2, 3, 6, 7	L	13, 15, 17, 53, 55	EG2, EXM	DGZ		[0.75 MM2;X18/55]
		99	3, 7	L	03, 05	EG2, EXM	DGZ		[0.75 MM2;X18/55]
22	68011378AA	1	2, 3, 6, 7	L		EG2, EXM	DGZ		CONNECTOR, [10 Pin; X18/60]
23									TERMINAL, Male
	05133990AA	99	2, 3, 6, 7	L	13, 15, 17, 53, 55	EG2, EXM	DGZ		[0.75 MM2; X18/60]
		99	3, 7	L	03, 05	EG2, EXM	DGZ		[0.75 MM2; X18/60]
24	68011362AA	1	2, 3, 6, 7	L		EG2, EXM	DGZ		CONNECTOR, [4 Pin; X18/64]
25	68013258AA	AR	2, 3, 6, 7	L		EG2, EXM	DGZ		TERMINAL, [1.0 - 2.5 MM2; X18/64]
26	68011358AA	1	2, 3, 6, 7	L		EG2, EXM	DGZ		CONNECTOR, Wiring, Tach Connector [4 Pin; X2/5]
27	68013257AA	AR	2, 3, 6, 7	L		EG2, EXM	DGZ		TERMINAL, [0.5 - 1.0 MM2; X2/5]
28	68011358AA	1	2, 3, 6, 7	L		EG2, EXM	DGZ		CONNECTOR, Wiring, [4 Pin; X2/7]
29	68013257AA	AR	2, 3, 6, 7	L		EG2, EXM	DGZ		TERMINAL, [0.5 - 1.0 MM2; X2/7]
30	68011379AA	1	2, 3, 6, 7	L		EG2, EXM	DGZ		CONNECTOR, [1 Pin; X4/49]
31	68016741AA	AR	2, 3, 6, 7	L		EG2, EXM	DGZ		TERMINAL, [X4/49]
32	68011229AA	1	2, 3, 6, 7	L		EG2, EXM	DGZ		CONNECTOR, Back Up Aid [6 Pin; X170]
33									TERMINAL
	05103873AA	3	3, 7	L	03, 05	EG2, EXM	DGZ		[0.75 MM2; MQS X170]
		3	2, 3, 6, 7	L	13, 15, 17, 53, 55	EG2, EXM	DGZ		[0.75 MM2; MQS X170]
34	68011344AA	1	2, 3, 6, 7	L	13, 15, 17	EG2, EXM	DGZ		CONNECTOR, Back Up Aid [6 Pin; X170]
35									TERMINAL, Male

SPRINTER (VB)

SERIES	LINE	BODY	ENGINE	TRANSMISSION
L = LOWLINE	3 = HD DODGE 2WD 6 = Lt. Duty DODGE 4WD 2 = Med. Duty DODGE 2WD 7 = Med. Duty DODGE 4WD	17 = VAN WHEEL BASE 7 55 = WAGON WHEEL BASE 5 15 = VAN WHEEL BASE 5 53 = 119 WB 13 = 119 WB 05 = CAB CHASSIS WHEEL BASE 5 03 = CAB CHASSIS WHEEL BASE 3	EG2 = 3.5L V6 Gas Engine EXM = 3.0L V6 Turbo Diesel Engine	DGZ = 5-Speed Auto W5A380 Transmission

Wiring Instrument Panel
Figure 8-1405

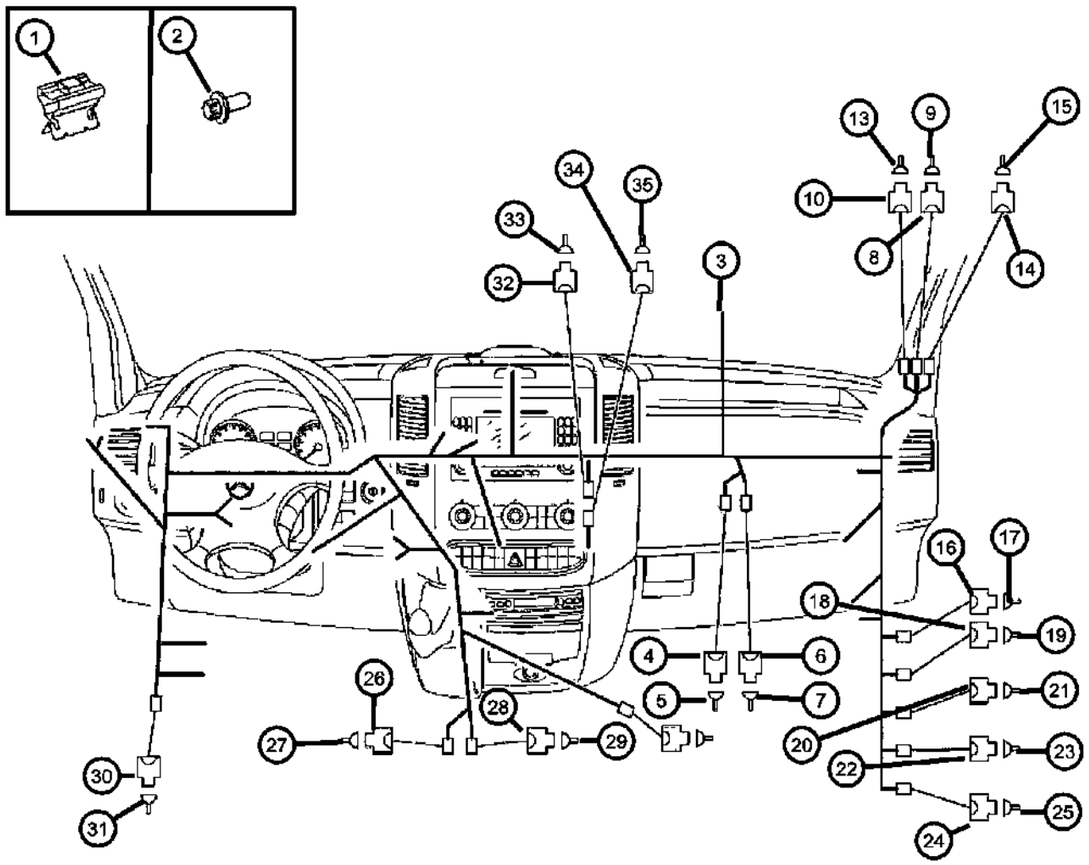

ITEM	PART NUMBER	QTY	LINE	SERIES	BODY	ENGINE	TRANS	TRIM	DESCRIPTION
	05133990AA	99	2, 3, 6, 7	L	13, 15, 17, 53, 55	EG2, EXM	DGZ		[0.75 MM2; X170]
		99	3, 7	L	03, 05	EG2, EXM	DGZ		[0.75 MM2; X170]

SPRINTER (VB)

SERIES	LINE	BODY	ENGINE	TRANSMISSION
L = LOWLINE	3 = HD DODGE 2WD 6 = Lt. Duty DODGE 4WD 2 = Med. Duty DODGE 2WD 7 = Med. Duty DODGE 4WD	17 = VAN WHEEL BASE 7 55 = WAGON WHEEL BASE 5 15 = VAN WHEEL BASE 5 53 = 119 WB 13 = 119 WB 05 = CAB CHASSIS WHEEL BASE 5 03 = CAB CHASSIS WHEEL BASE 3	EG2 = 3.5L V6 Gas Engine EXM = 3.0L V6 Turbo Diesel Engine	DGZ = 5-Speed Auto W5A380 Transmission

Wiring Instrument Panel
Figure 8-1410

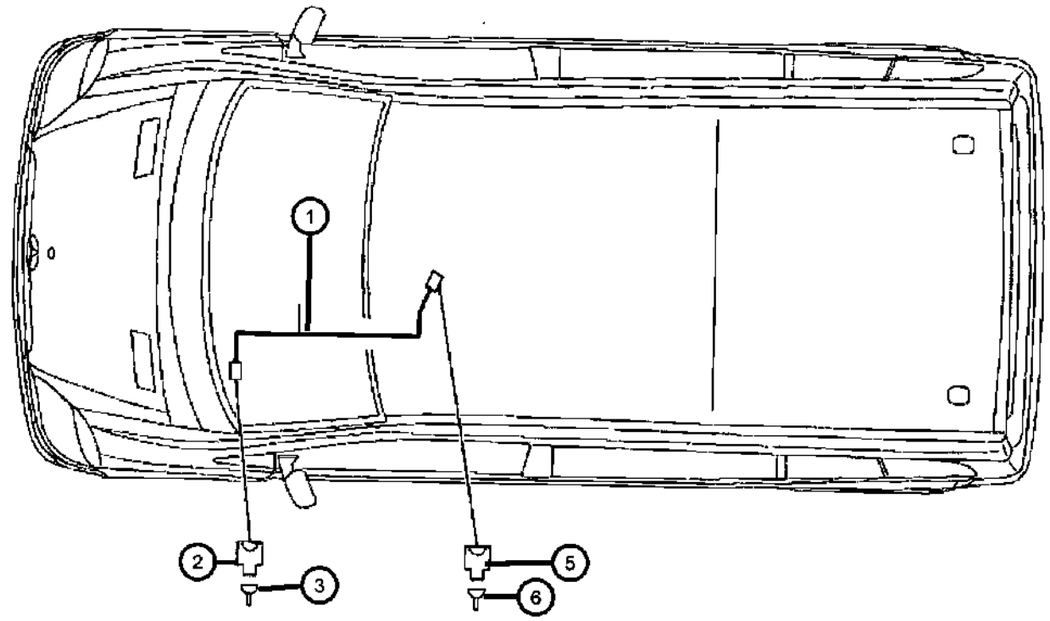

ITEM	PART NUMBER	QTY	LINE	SERIES	BODY	ENGINE	TRANS	TRIM	DESCRIPTION
1	68011457AA	1	2, 3, 6, 7	L		EG2, EXM	DGZ		WIRING, With [LM3]
2	05120278AA	1	2, 3, 6, 7	L		EG2, EXM	DGZ		CONNECTOR, [3 Pin; X62/72]
3	05103874AA	1	2, 3, 6, 7	L		EG2, EXM	DGZ		TERMINAL, [0.75 MM2; MQS; X62/72]
-4	05120860AA	1	2, 3, 6, 7	L		EG2, EXM	DGZ		GASKET, [1.6 - 1.9 MM2; MQS, X62/72]
5	05138039AA	1	2, 3, 6, 7	L		EG2, EXM	DGZ		INSULATOR, [3 Pin; X62/72]
6	05103880AA	AR	2, 3, 6, 7	L		EG2, EXM	DGZ		TERMINAL, [0.5 -1.0 MM2; JPT; X62/72]
-7	05103661AA	1	2, 3, 6, 7	L		EG2, EXM	DGZ		GASKET, [0.5-1.0 MM; X62/72]

SPRINTER (VB)

SERIES	LINE	BODY	ENGINE	TRANSMISSION
L = LOWLINE	3 = HD DODGE 2WD 6 = Lt. Duty DODGE 4WD 2 = Med. Duty DODGE 2WD 7 = Med. Duty DODGE 4WD	17 = VAN WHEEL BASE 7 55 = WAGON WHEEL BASE 5 15 = VAN WHEEL BASE 5 53 = 119 WB 13 = 119 WB 05 = CAB CHASSIS WHEEL BASE 5 03 = CAB CHASSIS WHEEL BASE 3	EG2 = 3.5L V6 Gas Engine EXM = 3.0L V6 Turbo Diesel Engine	DGZ = 5-Speed Auto W5A380 Transmission

Wiring Body
Figure 8-1505

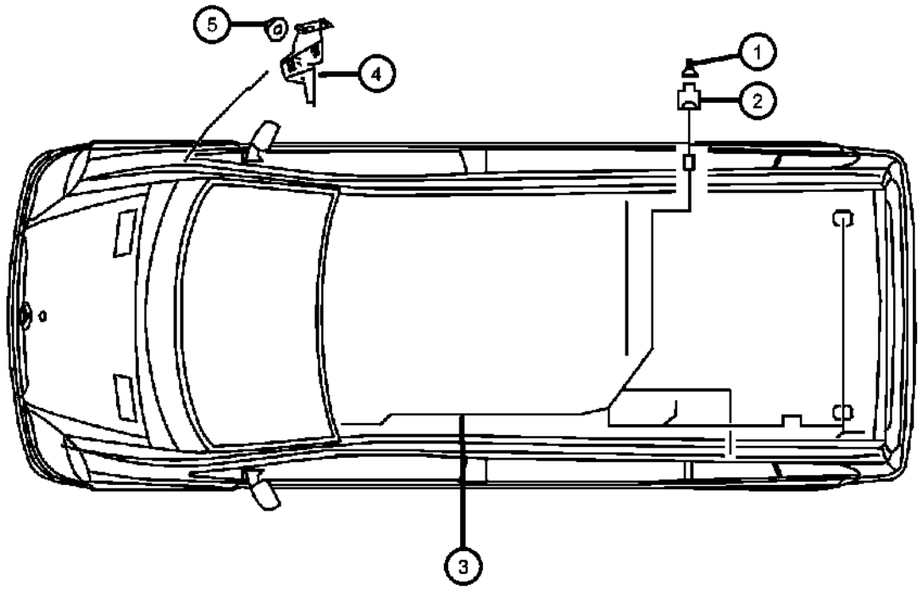

ITEM	PART NUMBER	QTY	LINE	SERIES	BODY	ENGINE	TRANS	TRIM	DESCRIPTION
1	05133353AA	AR	2, 3, 6, 7	L		EG2	DGZ		TERMINAL
2	68011283AA	1	2, 3, 6, 7	L		EG2, EXM	DGZ		CONNECTOR, Tank Connector [8-PIN;x25/15]
3	68013432AA	1	2, 3, 6, 7	L		EG2, EXM	DGZ		WIRING, Body
4	68013391AA	1	2, 3, 6, 7	L		EG2, EXM	DGZ		BRACKET
5									NUT
	68004878AA	2	3, 7	L	03, 05	EXM	DGZ		Bracket Mounting [M6]
		2	2, 3, 6, 7	L	13, 15, 17, 53, 55	EG2, EXM	DGZ		Bracket Mounting [M6]

SPRINTER (VB)

SERIES	LINE	BODY	ENGINE	TRANSMISSION
L = LOWLINE	3 = HD DODGE 2WD 6 = Lt. Duty DODGE 4WD 2 = Med. Duty DODGE 2WD 7 = Med. Duty DODGE 4WD	17 = VAN WHEEL BASE 7 55 = WAGON WHEEL BASE 5 15 = VAN WHEEL BASE 5 53 = 119 WB 13 = 119 WB 05 = CAB CHASSIS WHEEL BASE 5 03 = CAB CHASSIS WHEEL BASE 3	EG2 = 3.5L V6 Gas Engine EXM = 3.0L V6 Turbo Diesel Engine	DGZ = 5-Speed Auto W5A380 Transmission

Wiring Body
Figure 8-1506

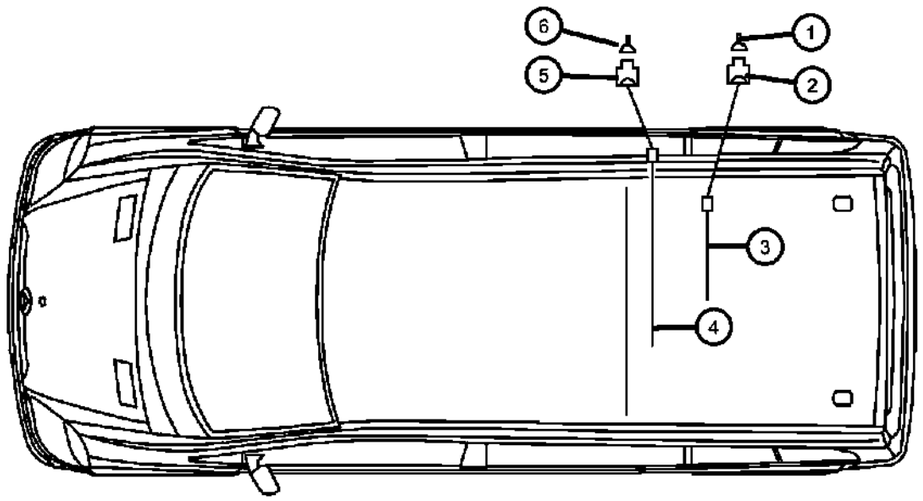

ITEM	PART NUMBER	QTY	LINE	SERIES	BODY	ENGINE	TRANS	TRIM	DESCRIPTION
1	05120734AA	1	2, 3, 6, 7	L		EG2, EXM	DGZ		TERMINAL, Male, [1.0-2.5 MM2;x25/16]
2	05120685AA	1	2, 3, 6, 7	L		EG2, EXM	DGZ		INSULATOR, Connector,Tank Filler [1-PIN;x25/16]
3	68013518AA	1	2, 3, 6, 7	L		EG2, EXM	DGZ		STRAP, Ground
4									WIRING, Fuel Tank
	68013519AA	1	2, 3, 6, 7	L		EXM	DGZ		Fuel Level Sensor
	68013520AA	1	2, 3, 6, 7	L		EG2	DGZ		Fuel Level Sensor
5	68011337AA	1	2, 3, 6, 7	L		EG2, EXM	DGZ		CONNECTOR, Tank Connector [8-PIN;x25/15]
6	68016743AA	1	2, 3, 6, 7	L		EG2, EXM	DGZ		TERMINAL, [X25/16]

SPRINTER (VB)

SERIES	LINE	BODY	ENGINE	TRANSMISSION
L = LOWLINE	3 = HD DODGE 2WD 6 = Lt. Duty DODGE 4WD 2 = Med. Duty DODGE 2WD 7 = Med. Duty DODGE 4WD	17 = VAN WHEEL BASE 7 55 = WAGON WHEEL BASE 5 15 = VAN WHEEL BASE 5 53 = 119 WB 13 = 119 WB 05 = CAB CHASSIS WHEEL BASE 5 03 = CAB CHASSIS WHEEL BASE 3	EG2 = 3.5L V6 Gas Engine EXM = 3.0L V6 Turbo Diesel Engine	DGZ = 5-Speed Auto W5A380 Transmission

Wiring Body
Figure 8-1507

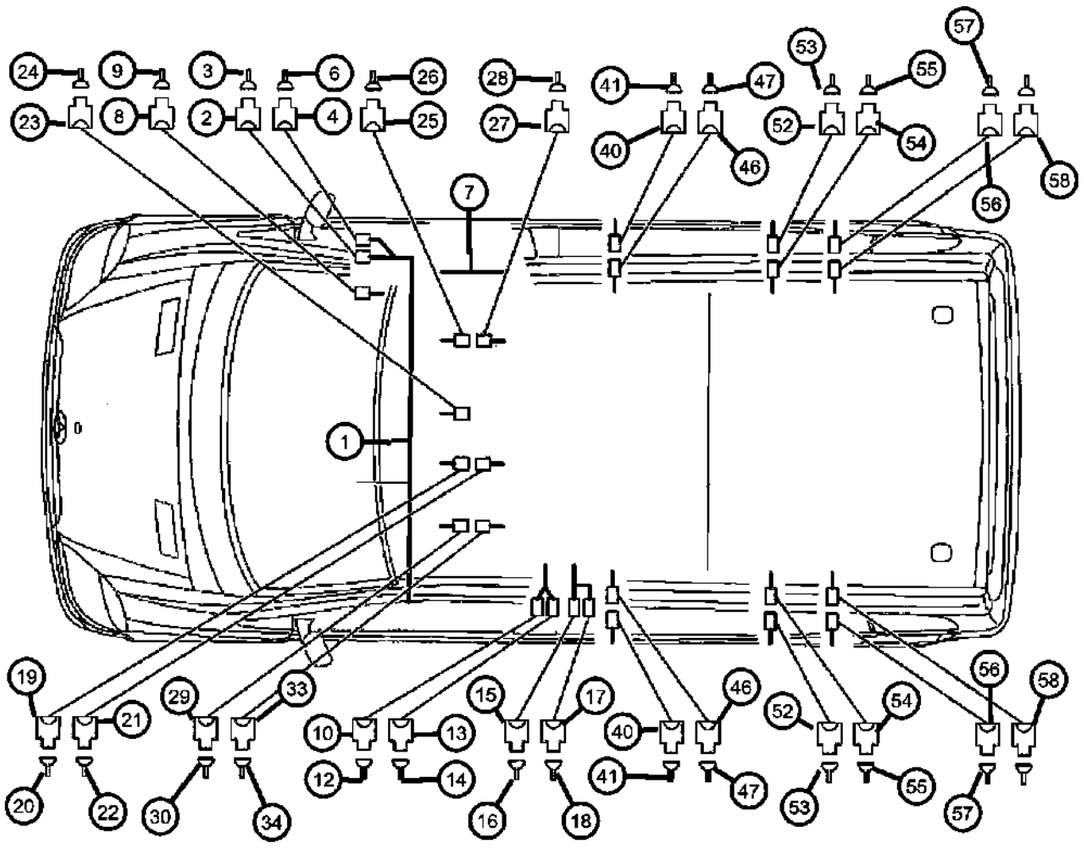

ITEM	PART NUMBER	QTY	LINE	SERIES	BODY	ENGINE	TRANS	TRIM	DESCRIPTION
1	68013434AA	1	2, 3, 6, 7	L		EG2, EXM	DGZ		WIRING, Body, Roof Harness
2									CONNECTOR, Wiring
	68011368AA	1	2, 3, 6, 7	L	03, 05, 53, 55	EG2, EXM	DGZ		Connector Cockpit Roof [6 Pin; X18/23]
		1	2, 3, 6, 7	L	13, 15, 17	EG2, EXM	DGZ		Connector Cockpit Roof [6 Pin; X18/23]
3	68013258AA	AR	2, 3, 6, 7	L		EG2, EXM	DGZ		TERMINAL, [1.0 - 2.5 MM2; X18/23]
4	68011342AA	1	2, 3, 6, 7	L		EG2, EXM	DGZ		CONNECTOR, [28 Pin; X15/51]
-5	68016717AA	1	2, 3, 6, 7	L		EG2, EXM	DGZ		COVER, Cover For Callout [#4]
6	05133990AA	3	2, 3, 6, 7	L	13, 15, 17, 53, 55	EG2, EXM	DGZ		TERMINAL, Male, [0.75 MM2;X18/51]
7	05174404AA	3	3, 7	L	03, 05	EG2, EXM	DGZ		WIRING, Roof Lamps
8	05120734AA	1	2, 3, 6, 7	L		EG2, EXM	DGZ		TERMINAL, Male, [1.0 -2.5 MM2; X85/22]
9	05103751AA	1	2, 3, 6, 7	L	13, 15, 17, 53, 55	EG2, EXM	DGZ		CONNECTOR, [X85/22]
10	68011342AA	1	2, 3, 6, 7	L		EG2, EXM	DGZ		CONNECTOR, [28 Pin; X18/52]
-11	68016717AA	1	2, 3, 6, 7	L		EG2, EXM	DGZ		COVER, Cover For Callout [#10]
12	05133990AA	3	2, 3, 6, 7	L	13, 15, 17, 53, 55	EG2, EXM	DGZ		TERMINAL, Male, [0.75 MM2;X18/52]
13	05138024AA	1	2, 3, 6, 7	L		EG2, EXM	DGZ		CONNECTOR
14									TERMINAL
	68013257AA	AR	2, 3, 6, 7	L		EG2, EXM	DGZ		[0.5 - 1.0 MM2; X18/53]
	68013258AA	AR	2, 3, 6, 7	L		EG2, EXM	DGZ		[1.0 - 2.5 MM2; X18/53]
	68016714AA	1	2, 3, 6, 7	L		EG2, EXM	DGZ		[4.0 MM2; X18/53]
15	68011379AA	1	2, 3, 6, 7	L		EG2, EXM	DGZ		CONNECTOR, Roof Air [1 Pin; X53/8]
16	68016741AA	AR	2, 3, 6, 7	L		EG2, EXM	DGZ		TERMINAL, [X53/8]
17	68011379AA	1	2, 3, 6, 7	L		EG2, EXM	DGZ		CONNECTOR, Roof Air [1Pin; X53/9]
18	68016741AA	AR	2, 3, 6, 7	L		EG2, EXM	DGZ		TERMINAL, [X53/9]
19	68011229AA	1	2, 3, 6, 7	L		EG2, EXM	DGZ		CONNECTOR, Connector, Backup Camera; [6Pin; X169]
20	05103873AA	3	2, 3, 6, 7	L	13, 15, 17, 53, 55	EG2, EXM	DGZ		TERMINAL, [0.75 MM2;MQS; X169]
21									CONNECTOR
	68011344AA	1	2, 3, 6, 7	L	13, 15, 17	EG2, EXM	DGZ		Connector, Backup Camera [6 Pin; X169]

SPRINTER (VB)

SERIES	LINE	BODY	ENGINE	TRANSMISSION
L = LOWLINE	3 = HD DODGE 2WD 6 = Lt. Duty DODGE 4WD 2 = Med. Duty DODGE 2WD 7 = Med. Duty DODGE 4WD	17 = VAN WHEEL BASE 7 55 = WAGON WHEEL BASE 5 15 = VAN WHEEL BASE 5 53 = 119 WB 13 = 119 WB 05 = CAB CHASSIS WHEEL BASE 5 03 = CAB CHASSIS WHEEL BASE 3	EG2 = 3.5L V6 Gas Engine EXM = 3.0L V6 Turbo Diesel Engine	DGZ = 5-Speed Auto W5A380 Transmission

Wiring Body
Figure 8-1507

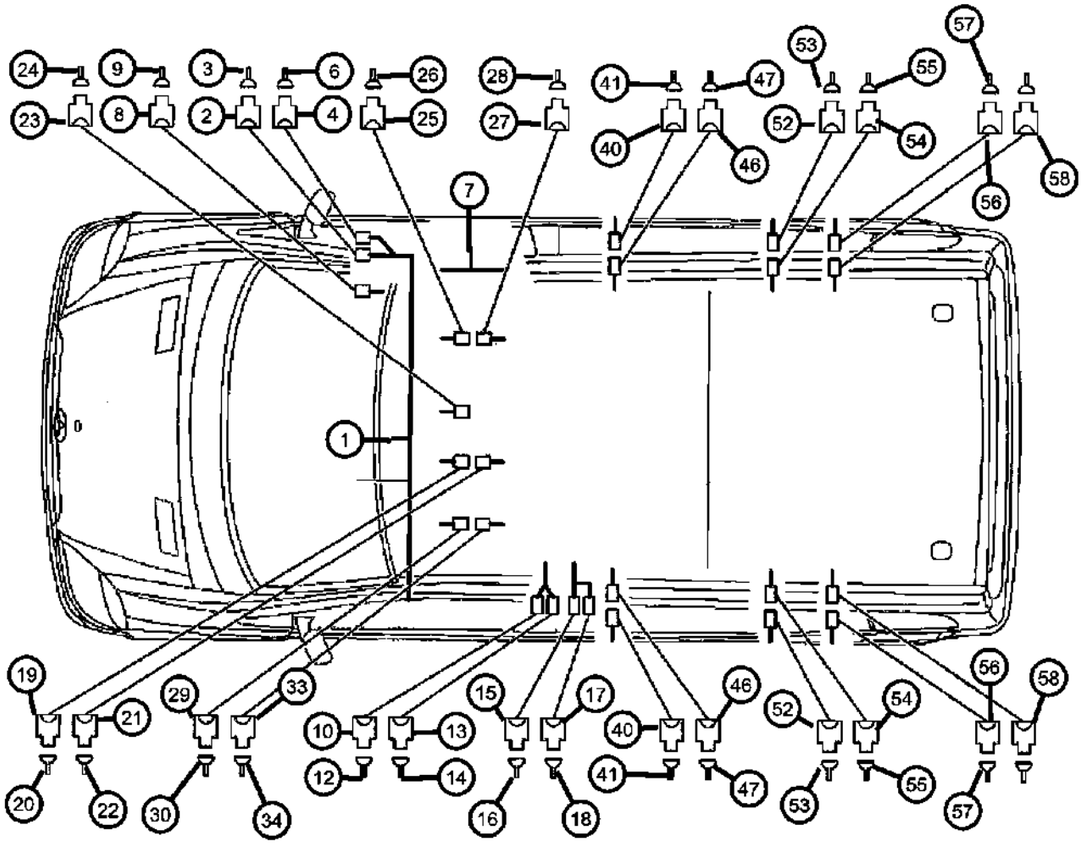

ITEM	PART NUMBER	QTY	LINE	SERIES	BODY	ENGINE	TRANS	TRIM	DESCRIPTION
		1	2, 3, 6, 7	L	53, 55	EG2, EXM	DGZ		Connector, Backup Camera [6 Pin; X169]
22	05133990AA	3	2, 3, 6, 7	L	13, 15, 17, 53, 55	EG2, EXM	DGZ		TERMINAL, Male, [0.75 MM2; X169]
23	68011231AA	1	2, 3, 6, 7	L		EG2, EXM	DGZ		CONNECTOR, Connector, Roof Din-Slot; [4 Pin; X178]
24	05103873AA	3	2, 3, 6, 7	L	13, 15, 17, 53, 55	EG2, EXM	DGZ		TERMINAL, [0.75 MM2 MQS; X178]
25	05120728AA	2	2, 3, 6, 7	L		EG2, EXM	DGZ		CONNECTOR, Roof [EDW/MRA; 2 Pin; X42/28]
26	05103873AA	3	2, 3, 6, 7	L	13, 15, 17, 53, 55	EG2, EXM	DGZ		TERMINAL, [0.75 MM2 MQS; X42/28]
27	68011374AA	1	2, 3, 6, 7	L		EG2, EXM	DGZ		CONNECTOR, [2 Pin; X42/28]
28	05133990AA	3	2, 3, 6, 7	L	13, 15, 17, 53, 55	EG2, EXM	DGZ		TERMINAL, Male, [0.75 MM2; X42/28]
29	68011288AA	1	2, 3, 6, 7	L		EXM, EG2	DGZ		CONNECTOR
30	05103663AA	AR	2, 3, 6, 7	L		EG2	DGZ		GROMMET, [0.25 - 1.0 MM2; X64/14]
-31	05120865AA	1	2, 3, 6, 7	L		EG2, EXM	DGZ		GASKET, Dummy Plug [X64/14]
-32	68016724AA	AR	2, 3, 6, 7	L		EG2, EXM	DGZ		TERMINAL, [X64/14]
33	68011365AA	1	2, 3, 6, 7	L		EG2, EXM	DGZ		CONNECTOR, Wiring, [4 Pin. X64/14]
34	68011882AA	AR	2, 3, 6, 7	L		EG2	DGZ		TERMINAL, [0.75 - 1.0mm2; x64/14]
-35	05103663AA	AR	2, 3, 6, 7	L		EG2	DGZ		GROMMET, [0.25 - 1.0mm2; x64/14]
-36	05120865AA	1	2, 3, 6, 7	L		EG2, EXM	DGZ		GASKET, [Dummy] Plug [X64/14]
-37	68016724AA	AR	2, 3, 6, 7	L		EG2, EXM	DGZ		TERMINAL, [X64/14]
-38	68011056AA	1	2, 3, 6, 7	L		EG2, EXM	DGZ		GASKET, [0.25 - 1.0 MM2]
-39	68011057AA	1	2, 3, 6, 7	L		EG2, EXM	DGZ		GASKET
40	05120751AA	1	2, 3, 6, 7	L		EG2, EXM	DGZ		CONNECTOR, Wiring
41	05103880AA	AR	2, 3, 6, 7	L		EG2, EXM	DGZ		TERMINAL, [0.5 -1.0 MM2 JPT; X174/1; X174/2]
-42	05103661AA	1	2, 3, 6, 7	L		EG2, EXM	DGZ		GASKET, [0.5 - 1.0 MM; X174/1; X174/2]
-43	05120858AA	2	2, 3, 6, 7	L		EG2, EXM	DGZ		GASKET, [Dummy] Plug [X174/1; X174/2]
-44	05133370AA	2	2, 3, 6, 7	L		EG2, EXM	DGZ		TERMINAL, Contact Spring [1.5 - 2.5 MM2 JPT; X174/1; X174/2]
-45	05120833AA	2	2, 3, 6, 7	L		EG2, EXM	DGZ		GASKET, [1.0 - 2.5MM; X174/1; X174/2]

SPRINTER (VB)

SERIES	LINE	BODY	ENGINE	TRANSMISSION
L = LOWLINE	3 = HD DODGE 2WD 6 = Lt. Duty DODGE 4WD 2 = Med. Duty DODGE 2WD 7 = Med. Duty DODGE 4WD	17 = VAN WHEEL BASE 7 55 = WAGON WHEEL BASE 5 15 = VAN WHEEL BASE 5 53 = 119 WB 13 = 119 WB 05 = CAB CHASSIS WHEEL BASE 5 03 = CAB CHASSIS WHEEL BASE 3	EG2 = 3.5L V6 Gas Engine EXM = 3.0L V6 Turbo Diesel Engine	DGZ = 5-Speed Auto W5A380 Transmission

Wiring Body
Figure 8-1507

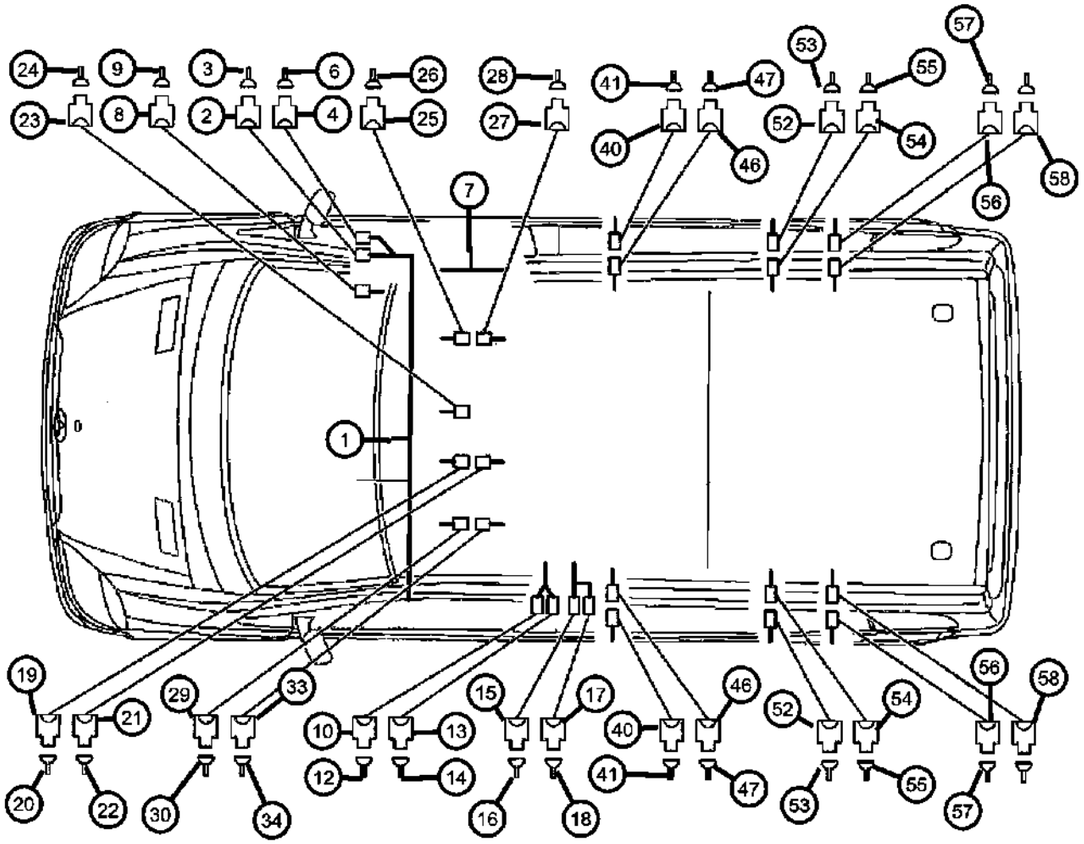

ITEM	PART NUMBER	QTY	LINE	SERIES	BODY	ENGINE	TRANS	TRIM	DESCRIPTION
46	68011336AA	1	2, 3, 6, 7	L		EG2, EXM	DGZ		CONNECTOR
47	68016743AA	1	2, 3, 6, 7	L		EG2, EXM	DGZ		TERMINAL, Flat Plug [X174/1; X174/2]
-48	05103663AA	AR	2, 3, 6, 7	L		EG2	DGZ		GROMMET, [0.25 - 1.0 MM2; X174/1; X174/2]
-49	05120865AA	1	2, 3, 6, 7	L		EG2, EXM	DGZ		GASKET, [Dummy] Plug [X174/1; X174/2]
-50	68011883AA	AR	2, 3, 6, 7	L		EG2	DGZ		TERMINAL, Flat Plug [1.5 - 2.5 MM2; X174/1; X174/2]
-51	05120864AA	99	2, 3, 6, 7	L		EG2	DGZ		GROMMET, Grommet [1.01 - 2.5 MM2; X174/1; X174/2]
52									CONNECTOR
	05120717AA	1	2, 3, 6, 7	L	13, 15, 17, 53, 55	EG2, EXM	DGZ		Connector Central Locking Motor [3 Pin;X43/11; X43/2], Right & Left, Rear Door
		1	3, 7	L	03, 05	EG2, EXM	DGZ		Connector Central Locking Motor [3 Pin;X43/11; X43/2], Right & Left, Rear Door
53	05103873AA	AR	2, 3, 6, 7	L		EG2, EXM	DGZ		TERMINAL, [0.75 MM2 MQS; X43/11; X43/12]
54	05183532AA	1	2, 3, 6, 7	L	13, 15, 17, 53, 55	EG2, EXM	DGZ		CONNECTOR, Central Locking Motor [3 Pin X43/11; X43/12], Right & Left, Rear Door
55	05133990AA	3	2, 3, 6, 7	L	13, 15, 17, 53, 55	EG2, EXM	DGZ		TERMINAL, Male, [0.75 MM2; X43/11; X43/12]
56									CONNECTOR, 68011247AA
	68011231AA	1	2, 3, 6, 7	L		EG2, EXM	DGZ		[4 Pin; X8/20], Right, Rear
	68011253AA	1	2, 3, 6, 7	L		EG2, EXM	DGZ		[4 Pin; X8/23], Left, Rear
	68011254AA	1	2, 3, 6, 7	L	13, 15, 17	EG2, EXM	DGZ		[6 Pin; X8/21], Right, Rear
		1	2, 3, 6, 7	L	03, 05, 53, 55	EG2, EXM	DGZ		[6 Pin; X8/21], Right, Rear
57									TERMINAL
	05103873AA	AR	2, 3, 6, 7	L		EG2, EXM	DGZ		[0.75 MM2 MQS; X8/20]
	68016713AA	AR	2, 3, 6, 7	L		EG2, EXM	DGZ		[2.5 - 4.0 MM2 SLK; X8/21; X8/23]
58									CONNECTOR
	68011357AA	1	2, 3, 6, 7	L		EG2, EXM	DGZ		[4 Pin; X8/22], Left, Rear Door
	68011360AA	1	2, 3, 6, 7	L		EG2, EXM	DGZ		[4 Pin; X8/20], Right, Rear Door
	68011362AA	1	2, 3, 6, 7	L		EG2, EXM	DGZ		[4 Pin; X8/23], Left, Rear Door

SPRINTER (VB)

SERIES	LINE	BODY	ENGINE	TRANSMISSION
L = LOWLINE	3 = HD DODGE 2WD 6 = Lt. Duty DODGE 4WD 2 = Med. Duty DODGE 2WD 7 = Med. Duty DODGE 4WD	17 = VAN WHEEL BASE 7 55 = WAGON WHEEL BASE 5 15 = VAN WHEEL BASE 5 53 = 119 WB 13 = 119 WB 05 = CAB CHASSIS WHEEL BASE 5 03 = CAB CHASSIS WHEEL BASE 3	EG2 = 3.5L V6 Gas Engine EXM = 3.0L V6 Turbo Diesel Engine	DGZ = 5-Speed Auto W5A380 Transmission

Wiring Body
Figure 8-1507

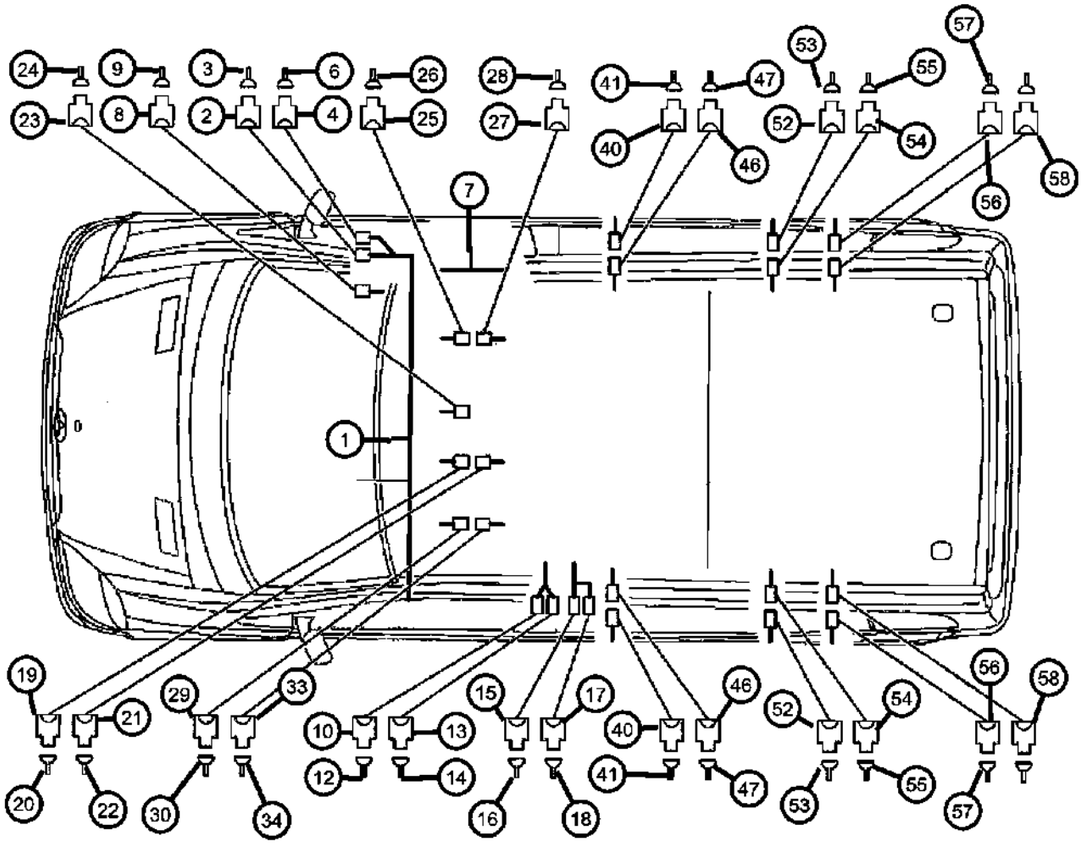

ITEM	PART NUMBER	QTY	LINE	SERIES	BODY	ENGINE	TRANS	TRIM	DESCRIPTION
-59									CONNECTOR, Wiring
	68011368AA	1	2, 3, 6, 7	L	03, 05, 53, 55	EG2, EXM	DGZ		[6 Pin; X8/21], Right, Rear Door
		1	2, 3, 6, 7	L	13, 15, 17	EG2, EXM	DGZ		[6 Pin; X8/21], Right, Rear Door
-60	05133990AA	3	2, 3, 6, 7	L	13, 15, 17, 53, 55	EG2, EXM	DGZ		TERMINAL, Male, [0.75 MM2; X8/20]
-61									TERMINAL
	68013257AA	AR	2, 3, 6, 7	L		EG2, EXM	DGZ		[0.5 - 1.0 MM2; X8/21]
	68013258AA	AR	2, 3, 6, 7	L		EG2, EXM	DGZ		[1.0 -2.5 MM2; X8/21; X8/23]

SPRINTER (VB)

SERIES	LINE	BODY	ENGINE	TRANSMISSION
L = LOWLINE	3 = HD DODGE 2WD 6 = Lt. Duty DODGE 4WD 2 = Med. Duty DODGE 2WD 7 = Med. Duty DODGE 4WD	17 = VAN WHEEL BASE 7 55 = WAGON WHEEL BASE 5 15 = VAN WHEEL BASE 5 53 = 119 WB 13 = 119 WB 05 = CAB CHASSIS WHEEL BASE 5 03 = CAB CHASSIS WHEEL BASE 3	EG2 = 3.5L V6 Gas Engine EXM = 3.0L V6 Turbo Diesel Engine	DGZ = 5-Speed Auto W5A380 Transmission

Wiring Body
Figure 8-1508

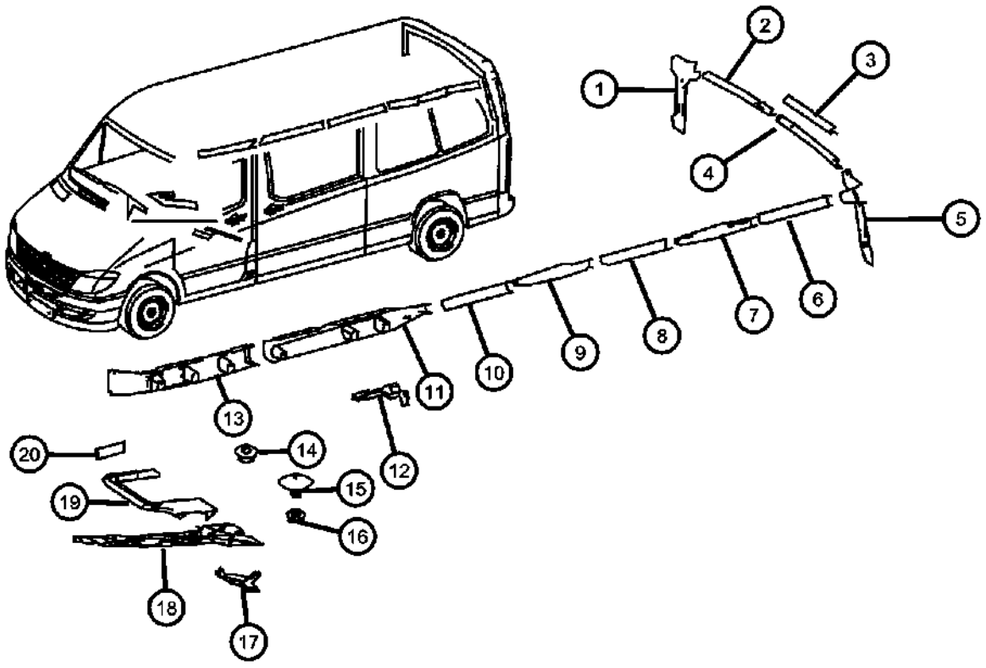

ITEM	PART NUMBER	QTY	LINE	SERIES	BODY	ENGINE	TRANS	TRIM	DESCRIPTION
1	68014262AA	1	2, 3, 6, 7	L	13, 15, 17	EG2, EXM	DGZ		SHIELD, Wiring
2	68014265AA	1	2, 3, 6, 7	L		EG2, EXM	DGZ		SHIELD, Wiring
3	68014266AA	1	2, 3, 6, 7	L	13, 15, 17	EG2, EXM	DGZ		SHIELD, Wiring
4	68014264AA	1	2, 3, 6, 7	L		EG2, EXM	DGZ		SHIELD, Wiring
5	68014260AA	1	2, 3, 6, 7	L	13, 15, 17	EG2, EXM	DGZ		SHIELD, Wiring
6	68005285AA	1	2, 3, 6, 7	L	53	EXM, EG2	DGZ		TUBE
7	68014259AA	1	2, 3, 6, 7	L	13, 15, 17	EG2, EXM	DGZ		SHIELD, Wiring
8									SHIELD, Wiring
	68005283AA	3	2, 3, 6, 7	L	13, 53	EG2, EXM	DGZ		
		4	2, 3, 6, 7	L	15, 17, 55	EG2, EXM	DGZ		
9									SHIELD, Wiring
	68005282AA	4	2, 3, 6, 7	L	15, 17, 55	EG2, EXM	DGZ		
		4	2, 3, 6, 7	L	13, 53	EG2, EXM	DGZ		
10	68014248AA	1	2, 3, 6, 7	L	13, 15, 17	EG2, EXM	DGZ		SHIELD, Wiring
11									SHIELD, Wiring
	68014253AA	1	2, 3, 6, 7	L	13, 15, 17	EG2, EXM	DGZ		D03+T19
	68014256AA	1	2, 3, 6, 7	L	13, 53	EG2, EXM	DGZ		T19
12	68016704AA	1	2, 3, 6, 7	L	13, 15, 17, 53, 55	EG2, EXM	DGZ		SHIELD, Wiring
13									SHIELD, Wiring
	68014250AA	1	2, 3, 6, 7	L	13, 53	EG2, EXM	DGZ		T19
	68014251AA	1	2, 3, 6, 7	L	13, 15, 17	EG2, EXM	DGZ		D03+T19
14									NUT
	68004878AA	1	3, 7	L	03, 05	EG2, EXM	DGZ		Mounting Cover M6
		2	2, 3, 6, 7	L	13, 15, 17, 53, 55	EG2, EXM	DGZ		Mounting Cover M6
15	68014252AA	3	2, 3, 6, 7	L	13, 15, 17, 53, 55	EG2, EXM	DGZ		RETAINER, Cable Duct Fastening
16	68014257AA	1	2, 3, 6, 7	L	13, 15, 17, 53, 55	EG2, EXM	DGZ		WASHER
17	68014257AA	1							WASHER, (NOT SERVICED)
18	68016711AA	1	2, 3, 6, 7	L		EG2, EXM	DGZ		SHIELD, Wiring
19	68015889AA	1	2, 3, 6, 7	L	05, 13, 15, 17	EG2, EXM	DGZ		SHIELD, Wiring, Floor Channel Extension
20	05135206AA	AR	2, 3, 6, 7	L	13, 15, 17, 53, 55	EG2, EXM	DGZ		WEATHERSTRIP, Cable Duct

SPRINTER (VB)

SERIES	LINE	BODY	ENGINE	TRANSMISSION
L = LOWLINE	3 = HD DODGE 2WD 6 = Lt. Duty DODGE 4WD 2 = Med. Duty DODGE 2WD 7 = Med. Duty DODGE 4WD	17 = VAN WHEEL BASE 7 55 = WAGON WHEEL BASE 5 15 = VAN WHEEL BASE 5 53 = 119 WB 13 = 119 WB 05 = CAB CHASSIS WHEEL BASE 5 03 = CAB CHASSIS WHEEL BASE 3	EG2 = 3.5L V6 Gas Engine EXM = 3.0L V6 Turbo Diesel Engine	DGZ = 5-Speed Auto W5A380 Transmission

Wiring Door, Deck Lid, and Liftgate
Figure 8-1515

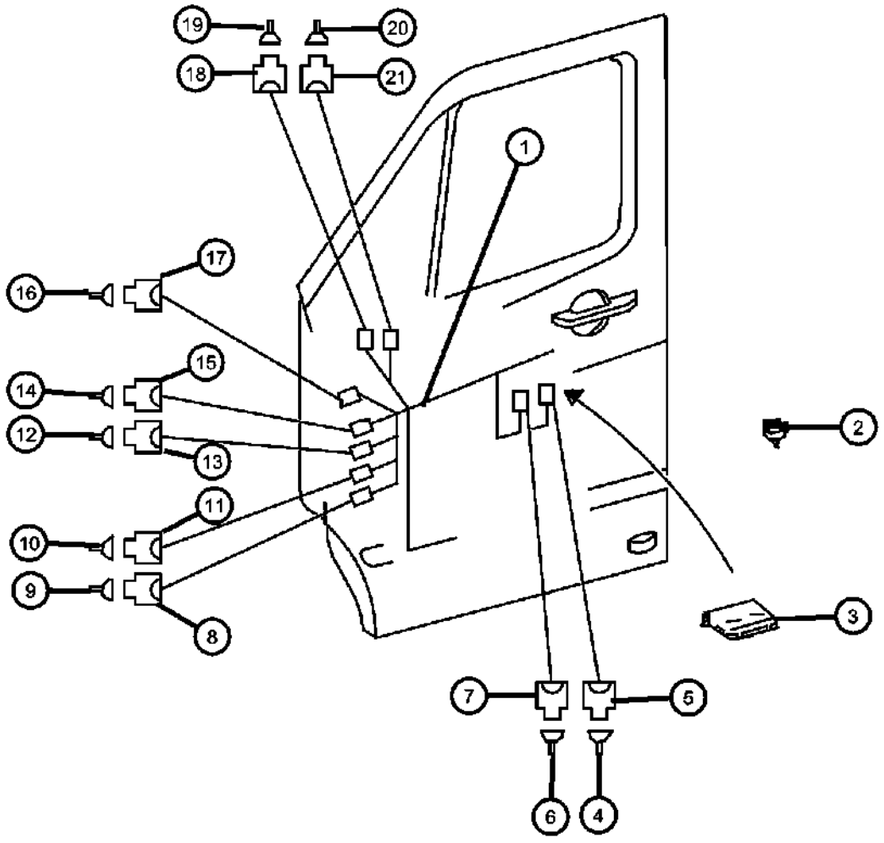

ITEM	PART NUMBER	QTY	LINE	SERIES	BODY	ENGINE	TRANS	TRIM	DESCRIPTION
1									WIRING, Door
	68013435AA	1	2, 3, 6, 7	L		EG2, EXM	DGZ		Left
	68013436AA	1	2, 3, 6, 7	L		EG2, EXM	DGZ		Right
2									CLIP, Retainer
	68013413AA	2	2, 3, 6, 7	L	13, 15, 17, 53, 55	EG2, EXM	DGZ		Entrance Lamp Separation Point 6.5-7MM
		2	3, 7	L	03, 05	EG2, EXM	DGZ		Entrance Lamp Separation Point 6.5-7MM
3									MODULE, Door
	68010055AA	1	2, 3, 6, 7	L		EG2, EXM	DGZ		Left Door
	68029085AA	1	2, 3, 6, 7	L		EG2, EXM	DGZ		With [GTB] Or [LBB] Or [JKG]
4	68011253AA	1	2, 3, 6, 7	L		EG2, EXM	DGZ		CONNECTOR, Door Control Unit 4-PIN;N69/1
5	68016713AA	AR	2, 3, 6, 7	L		EG2, EXM	DGZ		TERMINAL
6									TERMINAL
	05103873AA	3	3, 7	L	03, 05	EG2, EXM	DGZ		
		3	2, 3, 6, 7	L	13, 15, 17, 53, 55	EG2, EXM	DGZ		
7									CONNECTOR
	05138859AA	1	2, 3, 6, 7	L			DGZ		Door Control Unit 4-PIN;N69/1
	68011270AA	1	2, 3, 6, 7	L		EG2, EXM	DGZ		Door Control Unit 3-PIN;N69/1
	68011289AA	1	2, 3, 6, 7	L		EG2, EXM	DGZ		Door Control Unit 20-PIN;N69/1
8	68016718AA	1	2, 3, 6, 7	L		EG2, EXM	DGZ		CONNECTOR, Door Separation Point 10-PIN;X35/2
9									TERMINAL
	05103873AA	3	2, 3, 6, 7	L	13, 15, 17, 53, 55	EG2, EXM	DGZ		
		3	3, 7	L	03, 05	EG2, EXM	DGZ		
10	68016714AA	1	2, 3, 6, 7	L		EG2, EXM	DGZ		TERMINAL
11	68011362AA	1	2, 3, 6, 7	L		EG2, EXM	DGZ		CONNECTOR
12	68016713AA	AR	2, 3, 6, 7	L		EG2, EXM	DGZ		TERMINAL
13	68011253AA	1	2, 3, 6, 7	L		EG2, EXM	DGZ		CONNECTOR
14	05133990AA	3	2, 3, 6, 7	L	13, 15, 17, 53, 55	EXM, EG2	DGZ		TERMINAL, Male
15									CONNECTOR
	68011360AA	1	2, 3, 6, 7	L		EG2, EXM	DGZ		Door Separation Point 4-PIN;X35/1

SPRINTER (VB)

SERIES	LINE	BODY	ENGINE	TRANSMISSION
L = LOWLINE	3 = HD DODGE 2WD 6 = Lt. Duty DODGE 4WD 2 = Med. Duty DODGE 2WD 7 = Med. Duty DODGE 4WD	17 = VAN WHEEL BASE 7 55 = WAGON WHEEL BASE 5 15 = VAN WHEEL BASE 5 53 = 119 WB 13 = 119 WB 05 = CAB CHASSIS WHEEL BASE 5 03 = CAB CHASSIS WHEEL BASE 3	EG2 = 3.5L V6 Gas Engine EXM = 3.0L V6 Turbo Diesel Engine	DGZ = 5-Speed Auto W5A380 Transmission

AR = use ase required - = Non illustrrated part

<< RETURN TO GROUP INDEX

Wiring Door, Deck Lid, and Liftgate
Figure 8-1515

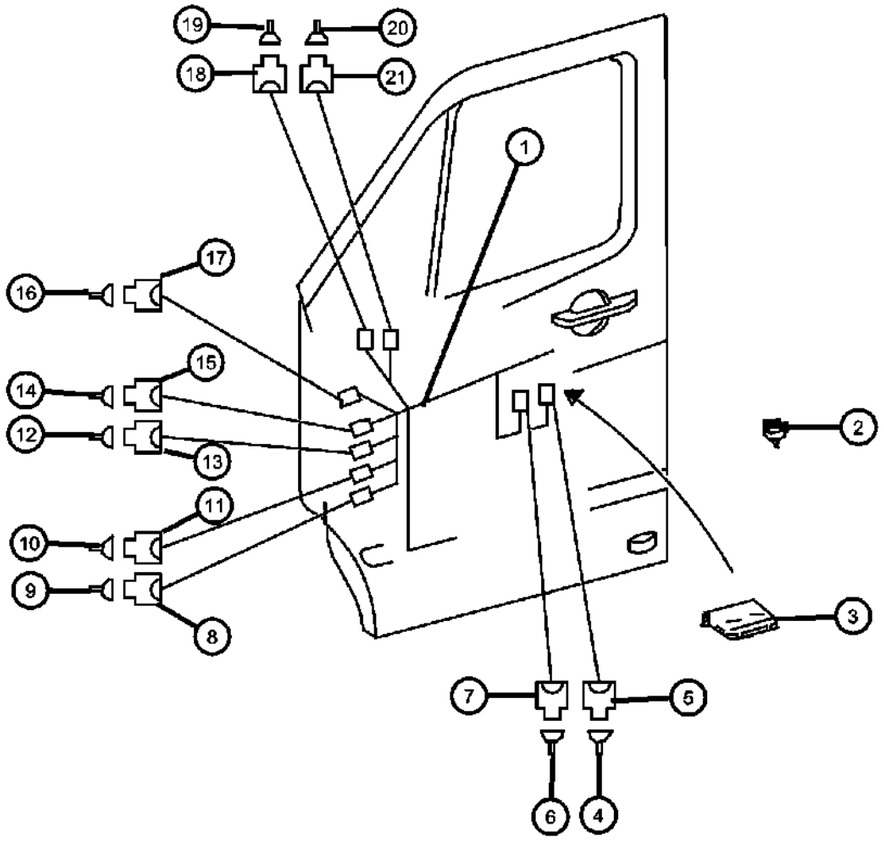

ITEM	PART NUMBER	QTY	LINE	SERIES	BODY	ENGINE	TRANS	TRIM	DESCRIPTION
	68011361AA	1	2, 3, 6, 7	L		EG2, EXM	DGZ		Door Separation Point 2-PIN;X35/44
	68011378AA	1	2, 3, 6, 7	L		EG2, EXM	DGZ		Door Separation Point 10-PIN;X35/2
16	68016713AA	AR	2, 3, 6, 7	L		EG2, EXM	DGZ		TERMINAL
17	05101166AA	1	2, 3, 6, 7	L		EG2, EXM	DGZ		CONNECTOR
18									CONNECTOR
	05120717AA	1	2, 3, 6, 7	L	13, 15, 17, 53, 55	EG2, EXM	DGZ		Outside Rearview Mirror Plug Connection 3-PIN,COD.A;X141/4
		1	3, 7	L	03, 05	EG2, EXM	DGZ		Outside Rearview Mirror Plug Connection 3-PIN,COD.A;X141/4
19									TERMINAL
	05103873AA	3	3, 7	L	03, 05	EG2, EXM	DGZ		
		3	2, 3, 6, 7	L	13, 15, 17, 53, 55	EG2, EXM	DGZ		
20	05133990AA	3	2, 3, 6, 7	L	13, 15, 17, 53, 55	EG2, EXM	DGZ		TERMINAL, Male
21	05183532AA	1	2, 3, 6, 7	L	13, 15, 17, 53, 55	EG2, EXM	DGZ		CONNECTOR

SPRINTER (VB)

SERIES	LINE	BODY	ENGINE	TRANSMISSION
L = LOWLINE	3 = HD DODGE 2WD 6 = Lt. Duty DODGE 4WD 2 = Med. Duty DODGE 2WD 7 = Med. Duty DODGE 4WD	17 = VAN WHEEL BASE 7 55 = WAGON WHEEL BASE 5 15 = VAN WHEEL BASE 5 53 = 119 WB 13 = 119 WB 05 = CAB CHASSIS WHEEL BASE 5 03 = CAB CHASSIS WHEEL BASE 3	EG2 = 3.5L V6 Gas Engine EXM = 3.0L V6 Turbo Diesel Engine	DGZ = 5-Speed Auto W5A380 Transmission

Wiring Door, Deck Lid, and Liftgate
Figure 8-1516

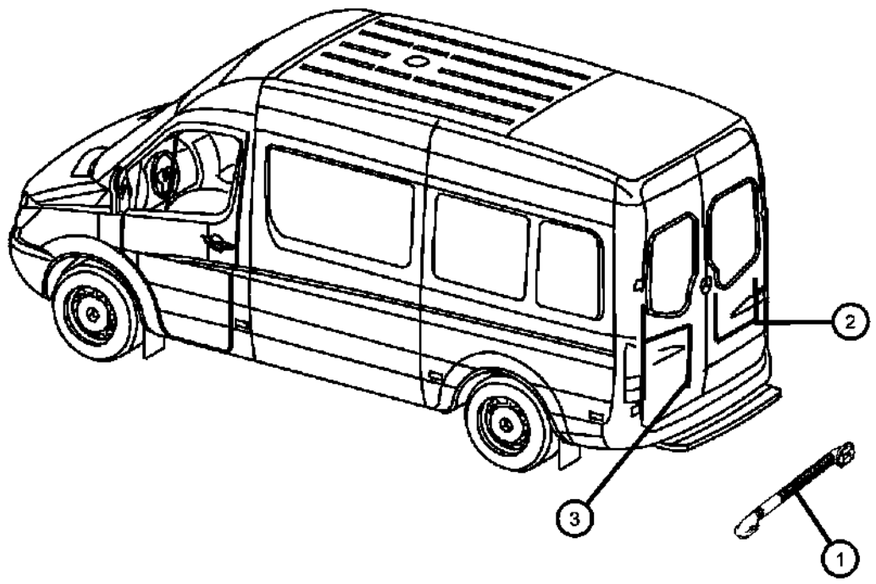

ITEM	PART NUMBER	QTY	LINE	SERIES	BODY	ENGINE	TRANS	TRIM	DESCRIPTION
1	68015890AA	1	2, 3, 6, 7	L	13, 15, 17, 53, 55	EG2, EXM	DGZ		GROMMET, Wiring
2	68013443AA	1	2, 3, 6, 7	L	13, 15, 17, 53, 55	EG2, EXM	DGZ		WIRING, Rear Door
3	68013442AA	1	2, 3, 6, 7	L	13, 15, 17, 53, 55	EG2, EXM	DGZ		WIRING, Rear Door

SPRINTER (VB)

SERIES	LINE	BODY	ENGINE	TRANSMISSION
L = LOWLINE	3 = HD DODGE 2WD 6 = Lt. Duty DODGE 4WD 2 = Med. Duty DODGE 2WD 7 = Med. Duty DODGE 4WD	17 = VAN WHEEL BASE 7 55 = WAGON WHEEL BASE 5 15 = VAN WHEEL BASE 5 53 = 119 WB 13 = 119 WB 05 = CAB CHASSIS WHEEL BASE 5 03 = CAB CHASSIS WHEEL BASE 3	EG2 = 3.5L V6 Gas Engine EXM = 3.0L V6 Turbo Diesel Engine	DGZ = 5-Speed Auto W5A380 Transmission

Wiring Body
Figure 8-1517

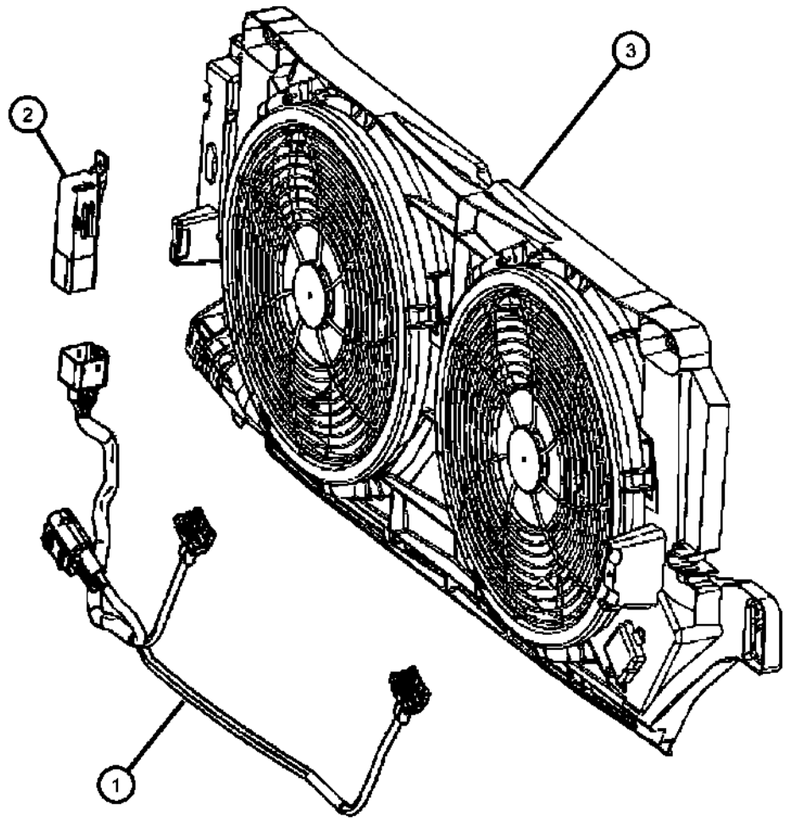

ITEM	PART NUMBER	QTY	LINE	SERIES	BODY	ENGINE	TRANS	TRIM	DESCRIPTION
1									WIRING
	68013668AA	1	2, 3, 6, 7	L	13, 15, 17	EG2, EXM	DGZ		Single Auxilary Fan
	68013673AA	1	2, 3, 6, 7	L	13, 15, 17, 53, 55	EG2, EXM	DGZ		Dual Auxilary Fan
2									RELAY
	68013669AA	1	2, 3, 6, 7	L	13, 15, 17	EG2, EXM	DGZ		With [HAB+(CWC%XJW%XJ1%XJY)]
	68013674AA	1	2, 3, 6, 7	L	13, 15, 17, 53, 55	EG2, EXM	DGZ		With [HAB]
3	68013674AA	1							MODULE, Cooling, (NOT SERVICED),

SPRINTER (VB)

SERIES	LINE	BODY	ENGINE	TRANSMISSION
L = LOWLINE	3 = HD DODGE 2WD 6 = Lt. Duty DODGE 4WD 2 = Med. Duty DODGE 2WD 7 = Med. Duty DODGE 4WD	17 = VAN WHEEL BASE 7 55 = WAGON WHEEL BASE 5 15 = VAN WHEEL BASE 5 53 = 119 WB 13 = 119 WB 05 = CAB CHASSIS WHEEL BASE 5 03 = CAB CHASSIS WHEEL BASE 3	EG2 = 3.5L V6 Gas Engine EXM = 3.0L V6 Turbo Diesel Engine	DGZ = 5-Speed Auto W5A380 Transmission

Wiring Body
Figure 8-1518

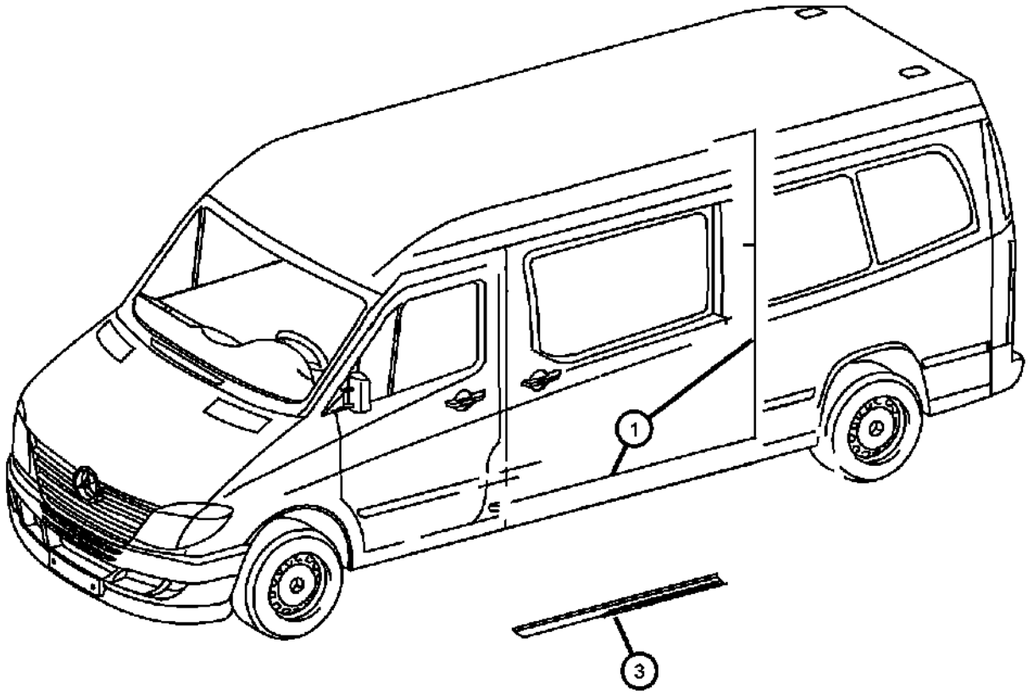

ITEM	PART NUMBER	QTY	LINE	SERIES	BODY	ENGINE	TRANS	TRIM	DESCRIPTION
1	68013440AA	1	2, 3, 6, 7	L	13, 15, 17	EG2, EXM	DGZ		WIRING, Sliding Door Left
-2	68013441AA	1	2, 3, 6, 7	L	13, 15, 17, 53, 55	EG2, EXM	DGZ		WIRING, Sliding Door Right
3	68010315AA	1	2, 3, 6, 7	L	13, 15, 17, 53, 55	EG2, EXM	DGZ		SHIELD, WiringRight

SPRINTER (VB)

SERIES	LINE	BODY	ENGINE	TRANSMISSION
L = LOWLINE	3 = HD DODGE 2WD 6 = Lt. Duty DODGE 4WD 2 = Med. Duty DODGE 2WD 7 = Med. Duty DODGE 4WD	17 = VAN WHEEL BASE 7 55 = WAGON WHEEL BASE 5 15 = VAN WHEEL BASE 5 53 = 119 WB 13 = 119 WB 05 = CAB CHASSIS WHEEL BASE 5 03 = CAB CHASSIS WHEEL BASE 3	EG2 = 3.5L V6 Gas Engine EXM = 3.0L V6 Turbo Diesel Engine	DGZ = 5-Speed Auto W5A380 Transmission

Wiring Harness Tie Straps & Related Parts
Figure 8-1610

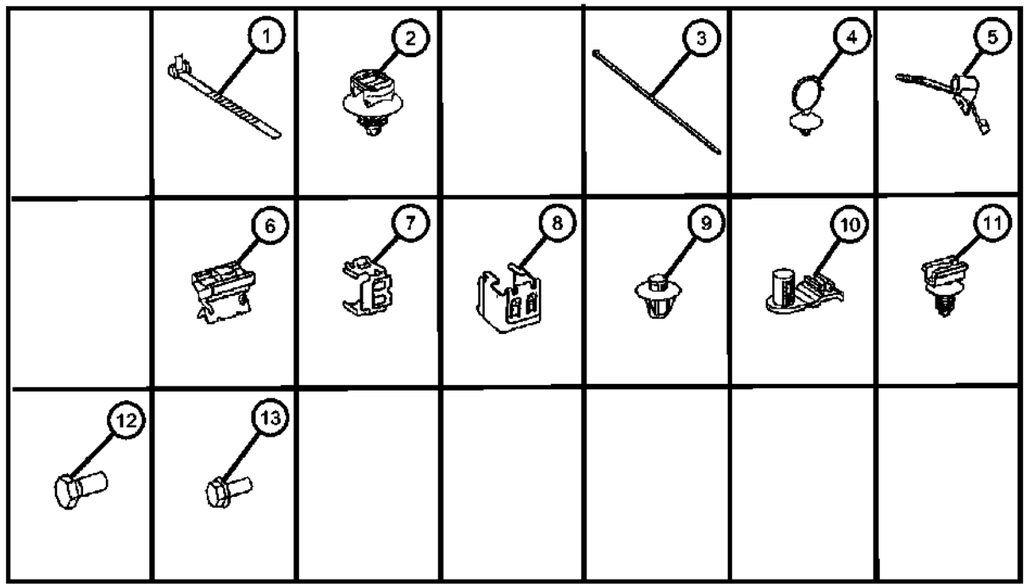

ITEM	PART NUMBER	QTY	LINE	SERIES	BODY	ENGINE	TRANS	TRIM	DESCRIPTION
1									TIE STRAP
	06104758AA	99	3, 7	L	03, 05	EG2, EXM	DGZ		[2.8x100 MM]
		99	2, 3, 6, 7	L	13, 15, 17, 53, 55	EG2, EXM	DGZ		[2.8x100 MM]
2	06104770AA	2	2, 3, 6, 7	L		EG2, EXM	DGZ		STRAP
3	06104762AA	1	2, 3, 6, 7	L		EG2, EXM	DGZ		STRAP, Tie
4	05126078AA	99	3, 7	L	03, 05	EG2, EXM	DGZ		TIE STRAP, [4.6x190 MM]
5	06104771AA	99	2, 3, 6, 7	L		EG2, EXM	DGZ		CLIP, Cable, [4.8x151 MM]
6	05159403AA	1	2, 3, 6, 7	L		EG2, EXM	DGZ		BRACKET, [13x18 MM]
7	68012055AA	AR	2, 3, 6, 7	L		EXM, EG2	DGZ		CLAMP
8	68013438AA	99	2, 3, 6, 7	L		EG2, EXM	DGZ		CLIP, Spring
9									FASTENER
	05097059AA	99	3, 7	L	03, 05	EG2, EXM	DGZ		
		99	2, 3, 6, 7	L	13, 15, 17, 53, 55	EG2, EXM	DGZ		
10	68013439AA	99	2, 3, 6, 7	L		EG2, EXM	DGZ		BRACKET
11									CLIP, Retainer
	68013413AA	1	2, 3, 6, 7	L	13, 15, 17, 53, 55	EG2, EXM	DGZ		[6.5 - 7.0 mm]
		1	3, 7	L	03, 05	EG2, EXM	DGZ		[6.5 - 7.0 mm]
12									SCREW, M8x20
	05097692AA	99	3, 7	L	03, 05	EG2, EXM	DGZ		
		99	2, 3, 6, 7	L	13, 15, 17, 53, 55	EG2, EXM	DGZ		
13	05126234AA	99	2, 3, 6, 7	L		EG2, EXM	DGZ		SCREW, [M6X16 MM]

SPRINTER (VB)

SERIES	LINE	BODY	ENGINE	TRANSMISSION
L = LOWLINE	3 = HD DODGE 2WD 6 = Lt. Duty DODGE 4WD 2 = Med. Duty DODGE 2WD 7 = Med. Duty DODGE 4WD	17 = VAN WHEEL BASE 7 55 = WAGON WHEEL BASE 5 15 = VAN WHEEL BASE 5 53 = 119 WB 13 = 119 WB 05 = CAB CHASSIS WHEEL BASE 5 03 = CAB CHASSIS WHEEL BASE 3	EG2 = 3.5L V6 Gas Engine EXM = 3.0L V6 Turbo Diesel Engine	DGZ = 5-Speed Auto W5A380 Transmission

AR = use ase required - = Non illustrrated part

<< RETURN TO GROUP INDEX

Ignition System
Figure 8-1905

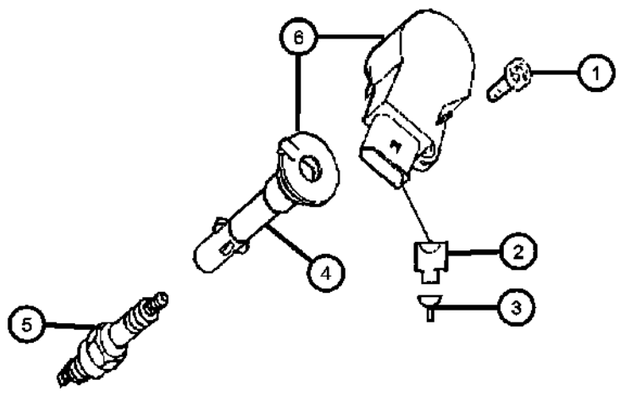

ITEM	PART NUMBER	QTY	LINE	SERIES	BODY	ENGINE	TRANS	TRIM	DESCRIPTION
1	06104143AA	2	2, 3, 6, 7	L		EG2	DGZ		SCREW, M6X1.0X20.0, Ignition Coil on Cylinder Head Cover M6x20
2	68011251AA	1	2, 3, 6, 7	L		EG2	DGZ		CONNECTOR, Ignition Coul 4-PIN
3	05133353AA	AR	2, 3, 6, 7	L		EG2	DGZ		TERMINAL
4	68011847AA	6	2, 3, 6, 7	L		EG2	DGZ		CABLE, Ignition Coil
5	68005667AA	6	2, 3, 6, 7	L		EG2	DGZ		SPARKPLUG, Engine
6	68011844AA	6	2, 3, 6, 7	L		EG2	DGZ		COIL, Ignition

SPRINTER (VB)

SERIES	LINE	BODY	ENGINE	TRANSMISSION
L = LOWLINE	3 = HD DODGE 2WD 6 = Lt. Duty DODGE 4WD 2 = Med. Duty DODGE 2WD 7 = Med. Duty DODGE 4WD	17 = VAN WHEEL BASE 7 55 = WAGON WHEEL BASE 5 15 = VAN WHEEL BASE 5 53 = 119 WB 13 = 119 WB 05 = CAB CHASSIS WHEEL BASE 5 03 = CAB CHASSIS WHEEL BASE 3	EG2 = 3.5L V6 Gas Engine EXM = 3.0L V6 Turbo Diesel Engine	DGZ = 5-Speed Auto W5A380 Transmission

AR = use ase required - = Non illustrrated part

<< RETURN TO GROUP INDEX

Instrument Panel And Structure
Figure 8-2005

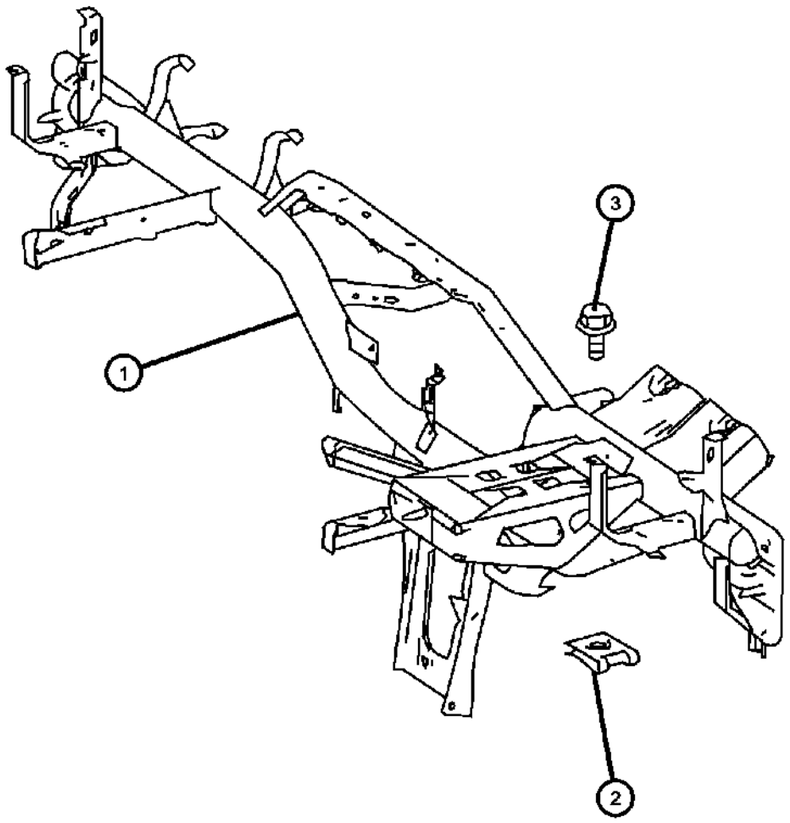

ITEM	PART NUMBER	QTY	LINE	SERIES	BODY	ENGINE	TRANS	TRIM	DESCRIPTION
1	68004781AA	1	2, 3, 6, 7	L		EG2, EXM	DGZ		FRAME, Instrument Panel
2									NUT, Spring
	68006573AA	14	3, 7	L	03, 05	EG2, EXM	DGZ		
		8	2, 3, 6, 7	L	13, 15, 17, 53, 55	EG2, EXM	DGZ		
3									SCREW
	05137660AA	4	3, 7	L	03, 05	EG2, EXM	DGZ		Frame To Body [M8 x 80]
		4	2, 3, 6, 7	L	13, 15, 17, 53, 55	EG2, EXM	DGZ		Frame To Body [M8 x 80]
	06104024AA	8	3, 7	L	03, 05	EG2, EXM	DGZ		Frame To Body [M8 x 25]
		8	2, 3, 6, 7	L	13, 15, 17, 53, 55	EG2, EXM	DGZ		Frame To Body [M8 x 25]

SPRINTER (VB)

SERIES	LINE	BODY	ENGINE	TRANSMISSION
L = LOWLINE	3 = HD DODGE 2WD 6 = Lt. Duty DODGE 4WD 2 = Med. Duty DODGE 2WD 7 = Med. Duty DODGE 4WD	17 = VAN WHEEL BASE 7 55 = WAGON WHEEL BASE 5 15 = VAN WHEEL BASE 5 53 = 119 WB 13 = 119 WB 05 = CAB CHASSIS WHEEL BASE 5 03 = CAB CHASSIS WHEEL BASE 3	EG2 = 3.5L V6 Gas Engine EXM = 3.0L V6 Turbo Diesel Engine	DGZ = 5-Speed Auto W5A380 Transmission

Instrument Panel
Figure 8-2006

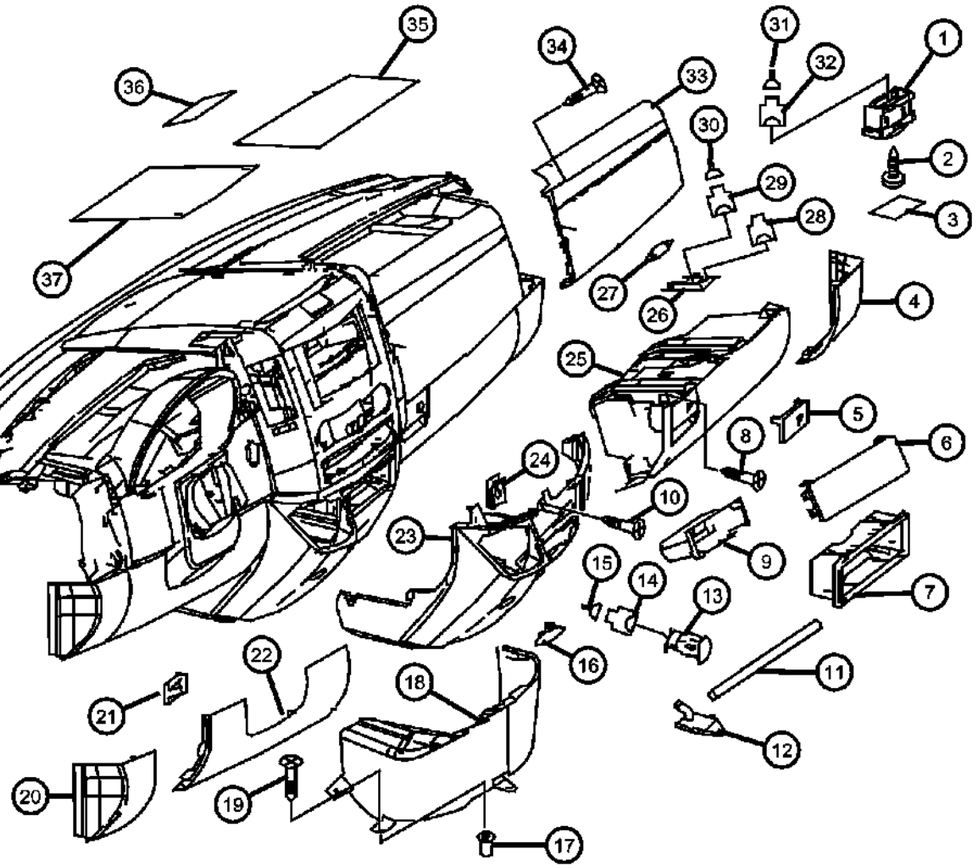

ITEM	PART NUMBER	QTY	LINE	SERIES	BODY	ENGINE	TRANS	TRIM	DESCRIPTION
1									BRACKET, Diagnostic Module
	05098297AA	1	3, 7	L	03, 05	EG2, EXM	DGZ		
		1	2, 3, 6, 7	L	13, 15, 17, 53, 55	EG2, EXM	DGZ		
2									BRACKET, Diagnostic Module
	05098297AA	1	3, 7	L	03, 05	EG2, EXM	DGZ		
		1	2, 3, 6, 7	L	13, 15, 17, 53, 55	EG2, EXM	DGZ		
3									PAD
	05123547AA	1	3, 7	L	03, 05	EG2, EXM	DGZ		
		1	2, 3, 6, 7	L	13, 15, 17, 53, 55	EG2, EXM	DGZ		
4	68004759AA	1	2, 3, 6, 7	L		EG2, EXM	DGZ		CAP, Instrument Panel End
5									LATCH, Glovebox
	68010389AA	1	2, 3, 6, 7	L		EG2, EXM	DGZ		
	68010390AA	1	2, 3, 6, 7	L		EG2, EXM	DGZ		[JKA] Locking Glove Box
6									COVER, Radio Opening
	05103928AA	1	3, 7	L	03, 05	EXM, EG2	DGZ		
		1	2, 3, 6, 7	L	13, 15, 17, 53, 55	EG2, EXM	DGZ		
7	68010402AA	1	2, 3, 6, 7	L		EG2, EXM	DGZ		BRACKET, CD Changer
8	06104574AA	4	2, 3, 6, 7	L		EG2, EXM	DGZ		SCREW, Tapping
9	68010400AA	1	2, 3, 6, 7	L		EG2, EXM	DGZ		BIN, Instrument Panel
10	06104574AA	4	2, 3, 6, 7	L		EG2, EXM	DGZ		SCREW, Tapping
11	68010393AA	1	2, 3, 6, 7	L		EG2, EXM	DGZ		HOSE, Glove Compartment
12	68010392AA	1	2, 3, 6, 7	L		EG2, EXM	DGZ		DUCT, AIR, Glove Compartment
13	68010399AA	1	2, 3, 6, 7	L		EG2, EXM	DGZ		POWER OUTLET, 12V
14	05103754AA	1	2, 3, 6, 7	L		EG2, EXM	DGZ		INSULATOR, 2 Way Female, Plug Socket 2-PIN
15	68016729AA	AR	2, 3, 6, 7	L		EG2, EXM	DGZ		TERMINAL
16	68010397AA	1	2, 3, 6, 7	L		EG2, EXM	DGZ		PLUG, Emergency Unlocking Mechanism
17	05098837AB	4	2, 3, 6, 7	L		EG2, EXM	DGZ		NUT, Plastic Snap-in
18	68004765AA	1	2, 3, 6, 7	L	13, 15, 17, 53, 55	EG2, EXM	DGZ		COVER, Footwell Center
19	06104574AA	4	2, 3, 6, 7	L		EG2, EXM	DGZ		SCREW, Tapping

SPRINTER (VB)

SERIES	LINE	BODY	ENGINE	TRANSMISSION
L = LOWLINE	3 = HD DODGE 2WD 6 = Lt. Duty DODGE 4WD 2 = Med. Duty DODGE 2WD 7 = Med. Duty DODGE 4WD	17 = VAN WHEEL BASE 7 55 = WAGON WHEEL BASE 5 15 = VAN WHEEL BASE 5 53 = 119 WB 13 = 119 WB 05 = CAB CHASSIS WHEEL BASE 5 03 = CAB CHASSIS WHEEL BASE 3	EG2 = 3.5L V6 Gas Engine EXM = 3.0L V6 Turbo Diesel Engine	DGZ = 5-Speed Auto W5A380 Transmission

AR = use ase required - = Non illustrrated part

<< RETURN TO GROUP INDEX

Instrument Panel
Figure 8-2006

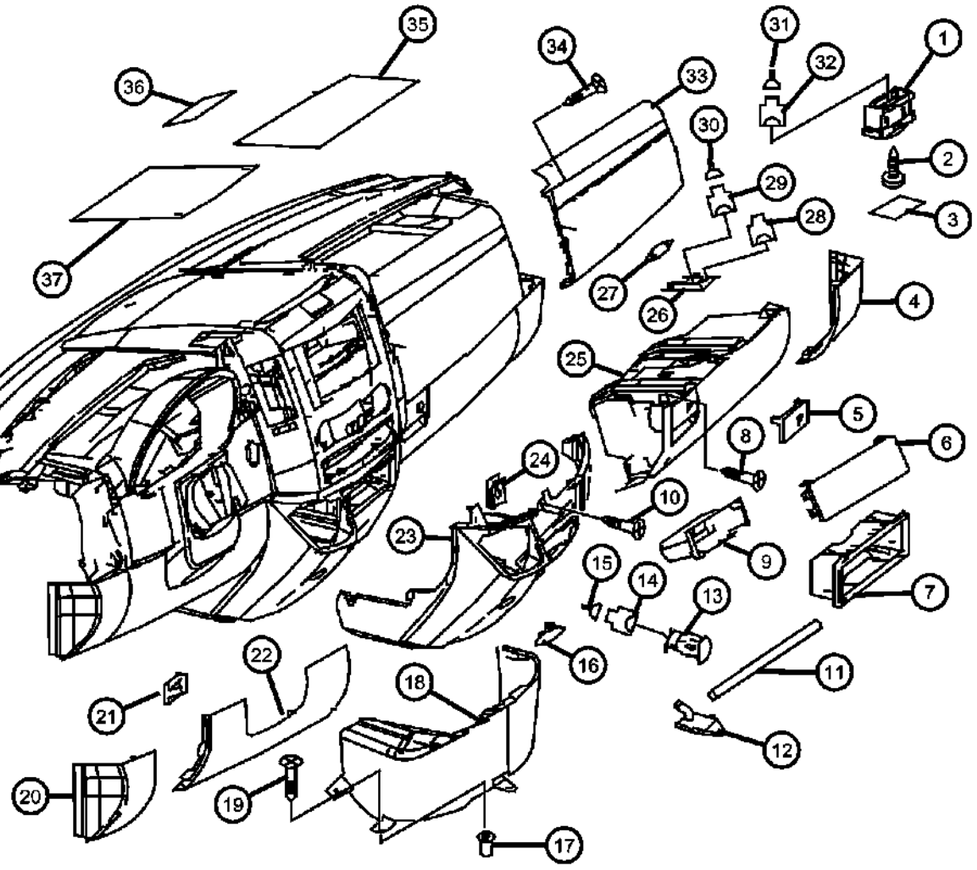

ITEM	PART NUMBER	QTY	LINE	SERIES	BODY	ENGINE	TRANS	TRIM	DESCRIPTION
20	68010406AA	1	2, 3, 6, 7	L		EG2, EXM	DGZ		CAP, Instrument Panel End, Left Outside Bottom
21	68010404AA	1	2, 3, 6, 7	L		EG2, EXM	DGZ		CLAMP, Bottom Covering
22	68010403AA	1	2, 3, 6, 7	L		EG2, EXM	DGZ		COVER, Instrument Panel, Steering Column Opening, Bottom
23	68010396AA	1	2, 3, 6, 7	L		EG2, EXM	DGZ		COVER, Instrument Panel, Gearshift Mechanism
24	68010398AA	2	2, 3, 6, 7	L		EG2, EXM	DGZ		CLIP, Console to Instrument Panel
25									GLOVE BOX, Instrument Panel
	68010387AA	1	2, 3, 6, 7	L		EG2, EXM	DGZ		
	68010388AA	1	2, 3, 6, 7	L		EG2, EXM	DGZ		[JKA] Locking Glove Compartment
26	68010391AA	1	2, 3, 6, 7	L		EG2, EXM	DGZ		LAMP, Glove Box
27	05096968AB	1	2, 3, 6, 7	L		EG2, EXM	DGZ		BULB, 12V 5W, Glove Compartment Interior Light 12V-5W
28	68004757AA	1	2, 3, 6, 7	L		EG2, EXM	DGZ		CONNECTOR, 2-PIN
29	68004757AA	1	2, 3, 6, 7	L		EG2, EXM	DGZ		CONNECTOR, Glove Compartment Lighting 2-PIN
30	05103882AA	1	2, 3, 6, 7	L					TERMINAL
31	05120274AA	1	2, 3, 6, 7	L		EG2, EXM	DGZ		INSULATOR, Diagnosis Box 16-PIN;xX11
32	68016730AA	AR	2, 3, 6, 7	L		EG2, EXM	DGZ		TERMINAL, X11
33	68010384AA	1	2, 3, 6, 7	L	05, 13, 15, 17	EG2, EXM	DGZ		COVER, Instrument Panel
34	06104574AA	4	2, 3, 6, 7	L		EG2, EXM	DGZ		SCREW, Tapping
35	68010409AA	1	2, 3, 6, 7	L		EG2, EXM	DGZ		REINFORCEMENT, Stowage Tray, Right
36	68010401AA	2	2, 3, 6, 7	L		EG2, EXM	DGZ		REINFORCEMENT
37									REINFORCEMENT
	68010407AA	1	2, 3, 6, 7	L		EG2, EXM	DGZ		
	68010408AA	1	2, 3, 6, 7	L		EG2, EXM	DGZ		[CXG] Hinged Lid for Center Stack Bin

SPRINTER (VB)

SERIES	LINE	BODY	ENGINE	TRANSMISSION
L = LOWLINE	3 = HD DODGE 2WD 6 = Lt. Duty DODGE 4WD 2 = Med. Duty DODGE 2WD 7 = Med. Duty DODGE 4WD	17 = VAN WHEEL BASE 7 55 = WAGON WHEEL BASE 5 15 = VAN WHEEL BASE 5 53 = 119 WB 13 = 119 WB 05 = CAB CHASSIS WHEEL BASE 5 03 = CAB CHASSIS WHEEL BASE 3	EG2 = 3.5L V6 Gas Engine EXM = 3.0L V6 Turbo Diesel Engine	DGZ = 5-Speed Auto W5A380 Transmission

AR = use ase required - = Non illustrrated part

<< RETURN TO GROUP INDEX

Instrument Panel
Figure 8-2007

ITEM	PART NUMBER	QTY	LINE	SERIES	BODY	ENGINE	TRANS	TRIM	DESCRIPTION
1	68010513AA	1	2, 3, 6, 7	L	13, 15, 17, 53, 55	EG2, EXM	DGZ		DISPLAY, Parking Assist
2	05183532AA	1	2, 3, 6, 7	L	13, 15, 17, 53, 55	EG2, EXM	DGZ		CONNECTOR
3	05133990AA	3	2, 3, 6, 7	L	13, 15, 17, 53, 55	EG2, EXM	DGZ		TERMINAL, Male

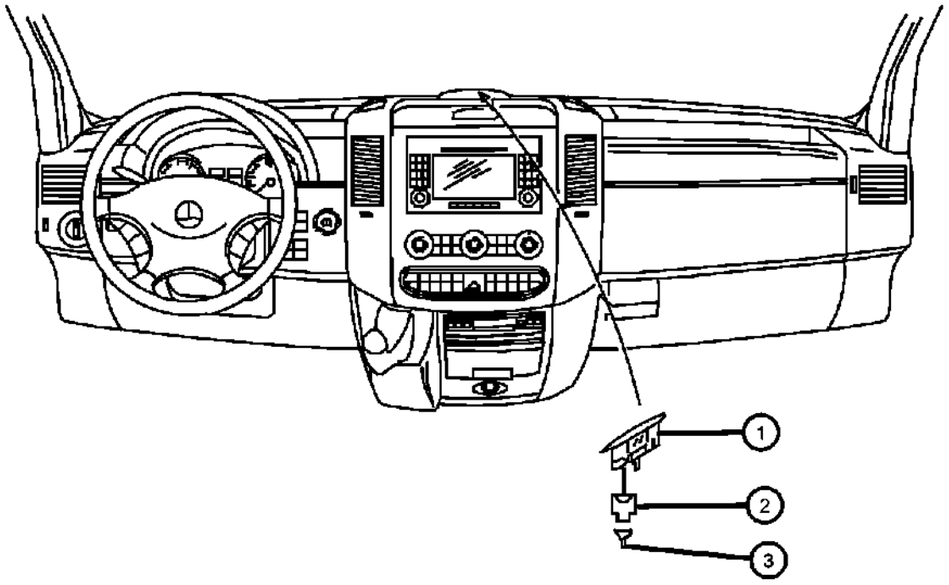

SPRINTER (VB)

SERIES	LINE	BODY	ENGINE	TRANSMISSION
L = LOWLINE	3 = HD DODGE 2WD 6 = Lt. Duty DODGE 4WD 2 = Med. Duty DODGE 2WD 7 = Med. Duty DODGE 4WD	17 = VAN WHEEL BASE 7 55 = WAGON WHEEL BASE 5 15 = VAN WHEEL BASE 5 53 = 119 WB 13 = 119 WB 05 = CAB CHASSIS WHEEL BASE 5 03 = CAB CHASSIS WHEEL BASE 3	EG2 = 3.5L V6 Gas Engine EXM = 3.0L V6 Turbo Diesel Engine	DGZ = 5-Speed Auto W5A380 Transmission

Instrument Panel
Figure 8-2010

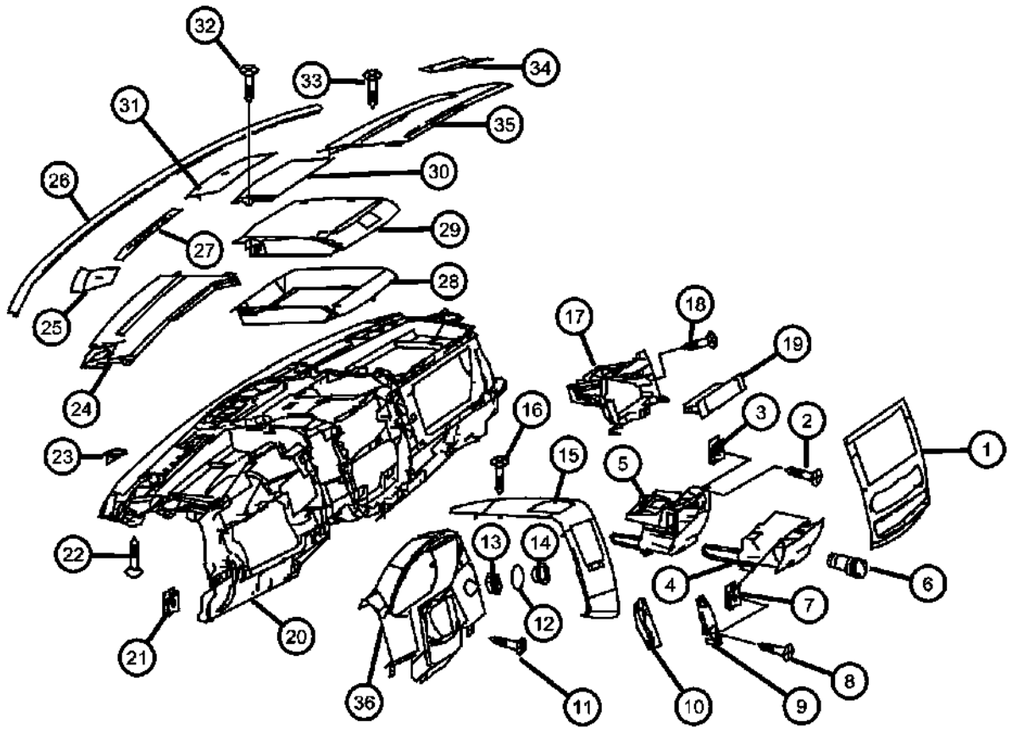

ITEM	PART NUMBER	QTY	LINE	SERIES	BODY	ENGINE	TRANS	TRIM	DESCRIPTION
1	68010405AA	1	2, 3, 6, 7	L		EG2, EXM	DGZ		BEZEL, Instrument Panel, Central Top
2	06104574AA	4	2, 3, 6, 7	L		EXM, EG2	DGZ		SCREW, Tapping
3									NUT, Spring U Type
	68010366AA	2	2, 3, 6, 7	L	13, 15, 17, 53, 55	EG2, EXM	DGZ		Insert Mounting
		2	3, 7	L	03, 05	EG2, EXM	DGZ		Insert Mounting
4	68004763AA	1	2, 3, 6, 7	L		EG2, EXM	DGZ		ASHTRAY, Instrument panel, Insert
5	68004761AA	1	2, 3, 6, 7	L		EG2, EXM	DGZ		ASHTRAY, Instrument panel
6									ELEMENT, Cigar Lighter
	05103679AA	1	3, 7	L	03, 05	EG2, EXM	DGZ		
		1	2, 3, 6, 7	L	13, 15, 17, 53, 55	EG2, EXM	DGZ		
7									NUT, Spring U Type
	68010366AA	3	3, 7	L	03, 05	EG2, EXM	DGZ		Console to Instrument Panel
		3	2, 3, 6, 7	L	13, 15, 17, 53, 55	EG2, EXM	DGZ		Console to Instrument Panel
8	06104574AA	4	2, 3, 6, 7	L		EG2, EXM	DGZ		SCREW, Tapping
9	68004755AA	1	2, 3, 6, 7	L		EG2, EXM	DGZ		BRACKET, Cell Phone
10	68010386AA	1	2, 3, 6, 7	L		EG2, EXM	DGZ		BRACKET
11	06104574AA	4	2, 3, 6, 7	L		EG2, EXM	DGZ		SCREW, Tapping
12	68023477AA	1	2, 3, 6, 7	L		EG2, EXM	DGZ		RING
13	68023477AA	1							SPACER, (NOT SERVICED)
14	68007010AA	1	2, 3, 6, 7	L		EG2, EXM	DGZ		RING, Ignition Lock
15									COVER
	68010394AA	1	2, 3, 6, 7	L		EG2, EXM	DGZ		Left,Central
	68010395AA	1	2, 3, 6, 7	L		EG2, EXM	DGZ		Right,Central
16	06104574AA	4	2, 3, 6, 7	L		EG2, EXM	DGZ		SCREW, Tapping
17	68010369AA	1	2, 3, 6, 7	L		EG2, EXM	DGZ		BRACKET, Radio, Radio Set
18	06104574AA	4	2, 3, 6, 7	L		EG2, EXM	DGZ		SCREW, Tapping
19	68010370AA	1	2, 3, 6, 7	L		EG2, EXM	DGZ		BEZEL, Instrument Panel, Central Console
20	68010364AA	1	2, 3, 6, 7	L		EG2, EXM	DGZ		PANEL, Instrument
21									NUT, Spring U Type
	68010366AA	63	3, 7	L	03, 05	EG2, EXM	DGZ		Instrument Panel to Body

SPRINTER (VB)

SERIES	LINE	BODY	ENGINE	TRANSMISSION
L = LOWLINE	3 = HD DODGE 2WD 6 = Lt. Duty DODGE 4WD 2 = Med. Duty DODGE 2WD 7 = Med. Duty DODGE 4WD	17 = VAN WHEEL BASE 7 55 = WAGON WHEEL BASE 5 15 = VAN WHEEL BASE 5 53 = 119 WB 13 = 119 WB 05 = CAB CHASSIS WHEEL BASE 5 03 = CAB CHASSIS WHEEL BASE 3	EG2 = 3.5L V6 Gas Engine EXM = 3.0L V6 Turbo Diesel Engine	DGZ = 5-Speed Auto W5A380 Transmission

Instrument Panel
Figure 8-2010

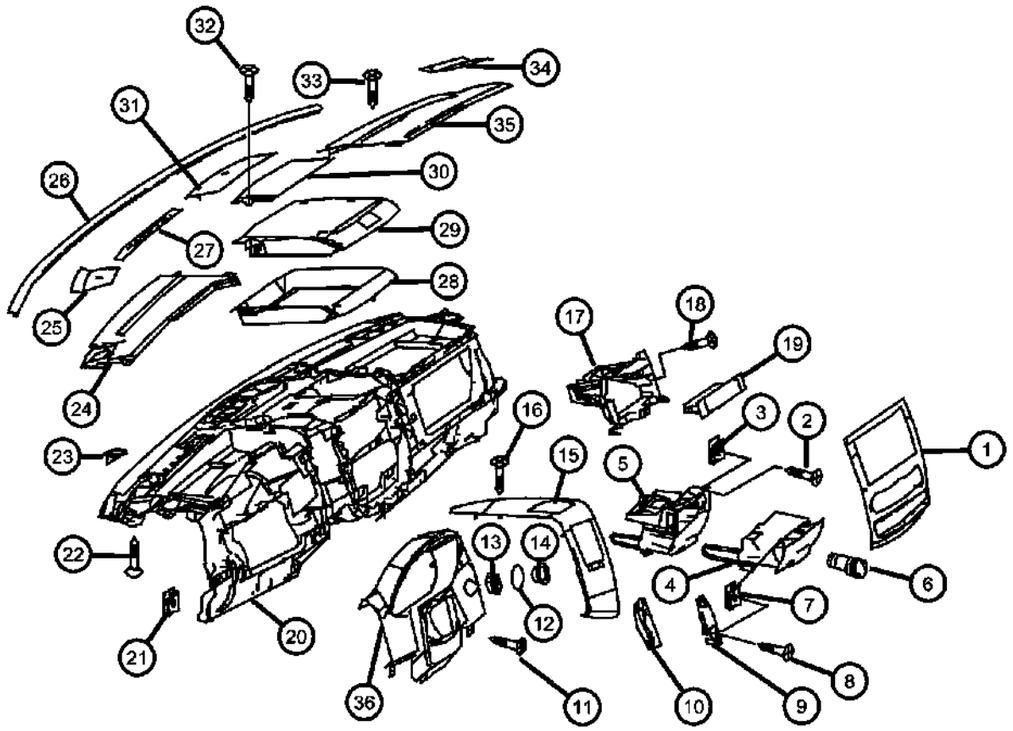

ITEM	PART NUMBER	QTY	LINE	SERIES	BODY	ENGINE	TRANS	TRIM	DESCRIPTION
		63	2, 3, 6, 7	L	13, 15, 17, 53, 55	EG2, EXM	DGZ		Instrument Panel to Body
22	06104506AA	1	2, 3, 6, 7	L		EG2, EXM	DGZ		SCREW, Self-Tapping, Instrument Panel to Body 4.8x16
23	68010368AA	1	2, 3, 6, 7	L		EG2, EXM	DGZ		CLIP, Spring
24	68010372AA	1	2, 3, 6, 7	L		EG2, EXM	DGZ		COVER, Instrument Panel, Defroster Left
25	68010374AA	1	2, 3, 6, 7	L		EG2, EXM	DGZ		GRILLE, Speaker, Loud-speaker,Left
26	68010371AA	1	2, 3, 6, 7	L		EG2, EXM	DGZ		SEAL, Windshield
27									GRILLE
	68010380AA	1	2, 3, 6, 7	L		EG2, EXM	DGZ		Defroster, Left
	68010381AA	1	2, 3, 6, 7	L		EG2, EXM	DGZ		Defroster,Right
28	68010376AA	1	2, 3, 6, 7	L		EG2, EXM	DGZ		BIN, Storage, Central Top
29	68010377AA	1	2, 3, 6, 7	L		EG2, EXM	DGZ		BIN, Storage, Central Top
30									COVER, Instrument Panel
	68010378AA	1	2, 3, 6, 7	L		EG2, EXM	DGZ		Without [CXG]
	68010412AA	1	2, 3, 6, 7	L	13, 15, 17, 53, 55	EG2, EXM	DGZ		With [XAG]
31	68010379AA	1	2, 3, 6, 7	L		EG2, EXM	DGZ		COVER, Instrument Panel, Central Loudspeaker
32	06104574AA	4	2, 3, 6, 7	L		EG2, EXM	DGZ		SCREW, Tapping
33	06104574AA	4	2, 3, 6, 7	L		EG2, EXM	DGZ		SCREW, Tapping
34	68010375AA	1	2, 3, 6, 7	L		EG2, EXM	DGZ		GRILLE, Speaker, Loud-speaker,Right
35	68010373AA	1	2, 3, 6, 7	L		EG2, EXM	DGZ		COVER, Instrument Panel, Defroster,Right
36	68010383AA	1	2, 3, 6, 7	L		EG2, EXM	DGZ		BEZEL, Cluster

SPRINTER (VB)

SERIES	LINE	BODY	ENGINE	TRANSMISSION
L = LOWLINE	3 = HD DODGE 2WD 6 = Lt. Duty DODGE 4WD 2 = Med. Duty DODGE 2WD 7 = Med. Duty DODGE 4WD	17 = VAN WHEEL BASE 7 55 = WAGON WHEEL BASE 5 15 = VAN WHEEL BASE 5 53 = 119 WB 13 = 119 WB 05 = CAB CHASSIS WHEEL BASE 5 03 = CAB CHASSIS WHEEL BASE 3	EG2 = 3.5L V6 Gas Engine EXM = 3.0L V6 Turbo Diesel Engine	DGZ = 5-Speed Auto W5A380 Transmission

AR = use ase required - = Non illustrrated part

<< RETURN TO GROUP INDEX

Instrument Panel Cluster
Figure 8-2105

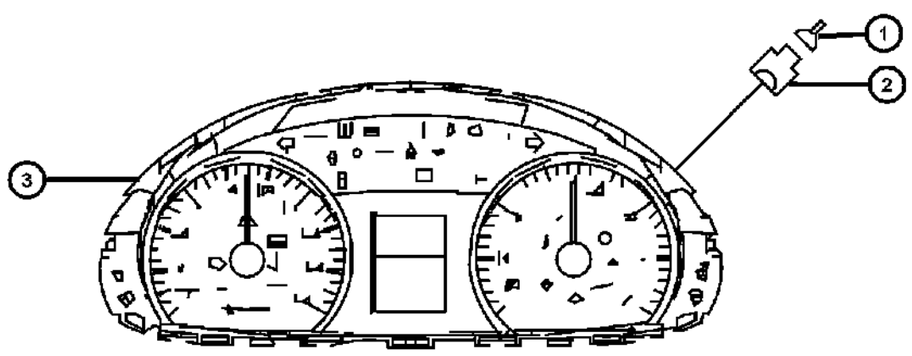

ITEM	PART NUMBER	QTY	LINE	SERIES	BODY	ENGINE	TRANS	TRIM	DESCRIPTION
1									TERMINAL
	05103873AA	3	3, 7	L	03, 05	EG2, EXM	DGZ		
		3	2, 3, 6, 7	L	13, 15, 17, 53, 55	EG2, EXM	DGZ		
2		3							SOCKET, (NOT SERVICED)
3									CLUSTER, Instrument Panel
	68010463AA	1	2, 3, 6, 7	L		EXM	DGZ		With [JAV + 3SL]
	68010464AA	1	2, 3, 6, 7	L		EXM	DGZ		With [3SL]
	68010465AA	1	2, 3, 6, 7	L		EG2	DGZ		With [JAV]
	68010467AA	1	2, 3, 6, 7	L		EG2	DGZ		With [3SL] Without [JAV]
	68019248AA	1	2, 3	L		EXM	DGZ		With [JAV] Without [3SL]
	68019258AA	1	2, 3	L		EXM	DGZ		Without [-3SL And -JAV]

SPRINTER (VB)

SERIES	LINE	BODY	ENGINE	TRANSMISSION
L = LOWLINE	3 = HD DODGE 2WD 6 = Lt. Duty DODGE 4WD 2 = Med. Duty DODGE 2WD 7 = Med. Duty DODGE 4WD	17 = VAN WHEEL BASE 7 55 = WAGON WHEEL BASE 5 15 = VAN WHEEL BASE 5 53 = 119 WB 13 = 119 WB 05 = CAB CHASSIS WHEEL BASE 5 03 = CAB CHASSIS WHEEL BASE 3	EG2 = 3.5L V6 Gas Engine EXM = 3.0L V6 Turbo Diesel Engine	DGZ = 5-Speed Auto W5A380 Transmission

Radio
Figure 8-2205

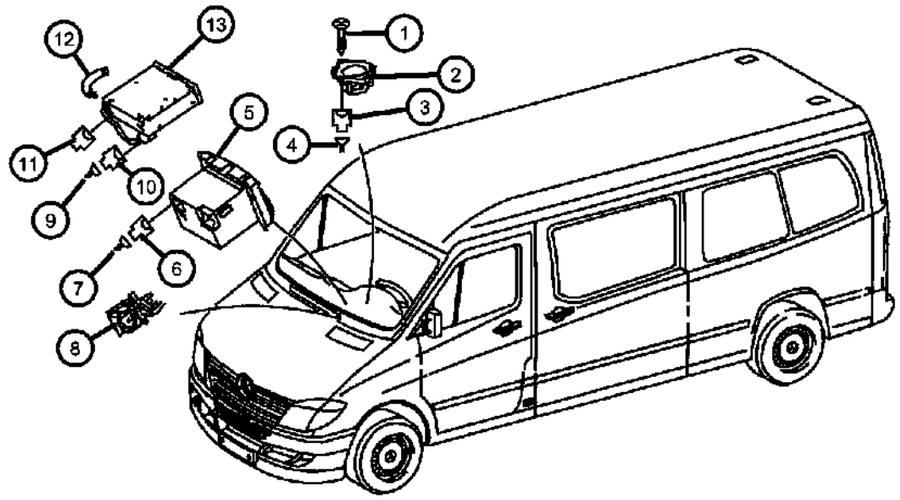

ITEM	PART NUMBER	QTY	LINE	SERIES	BODY	ENGINE	TRANS	TRIM	DESCRIPTION
1	06104574AA	4	2, 3, 6, 7	L		EG2, EXM	DGZ		SCREW, Tapping
2	68010542AA	1	2, 3, 6, 7	L		EG2, EXM	DGZ		SPEAKER, Center
3	05101166AA	1	2, 3, 6, 7	L		EG2, EXM	DGZ		CONNECTOR, Center Fill Speaker 2-PIN;H4/27
4									TERMINAL
	05103873AA	3	3, 7	L	03, 05	EG2, EXM	DGZ		
		3	2, 3, 6, 7	L	13, 15, 17, 53, 55	EG2, EXM	DGZ		
5									RADIO, AM/FM with CD
	68010518AA	1	2, 3, 6, 7	L		EG2, EXM	DGZ		With [RBV]
	68010520AA	1	2, 3, 6, 7	L		EG2, EXM	DGZ		With [RBE]
6	05101166AA	1	2, 3, 6, 7	L		EG2, EXM	DGZ		CONNECTOR, Additional Fan Operating Unit 2-PIN;M4/12
7									TERMINAL
	05103873AA	3	3, 7	L	03, 05	EG2, EXM	DGZ		
		3	2, 3, 6, 7	L	13, 15, 17, 53, 55	EG2, EXM	DGZ		
8	68010529AA	1	2, 3, 6, 7	L		EG2, EXM	DGZ		BRACKET
9									TERMINAL
	05103873AA	3	3, 7	L	03, 05	EG2, EXM	DGZ		
		3	2, 3, 6, 7	L	13, 15, 17, 53, 55	EG2, EXM	DGZ		
10	05120717AA	1	2, 3, 6, 7	L	13, 15, 17, 53, 55	EG2, EXM	DGZ		CONNECTOR, CD Changer 3-PIN
11	68011188AA	1	2, 3, 6, 7	L		EG2, EXM	DGZ		CONNECTOR, CD Changer Most A2/6
12	68011088AA	1	2, 3, 6, 7	L		EG2, EXM	DGZ		COVER, CD Changer A2/6
13	68010533AA	1	2, 3, 6, 7	L		EG2, EXM	DGZ		PLAYER KIT, CD Changer - 6 Disc

SPRINTER (VB)

SERIES	LINE	BODY	ENGINE	TRANSMISSION
L = LOWLINE	3 = HD DODGE 2WD 6 = Lt. Duty DODGE 4WD 2 = Med. Duty DODGE 2WD 7 = Med. Duty DODGE 4WD	17 = VAN WHEEL BASE 7 55 = WAGON WHEEL BASE 5 15 = VAN WHEEL BASE 5 53 = 119 WB 13 = 119 WB 05 = CAB CHASSIS WHEEL BASE 5 03 = CAB CHASSIS WHEEL BASE 3	EG2 = 3.5L V6 Gas Engine EXM = 3.0L V6 Turbo Diesel Engine	DGZ = 5-Speed Auto W5A380 Transmission

Antenna
Figure 8-2210

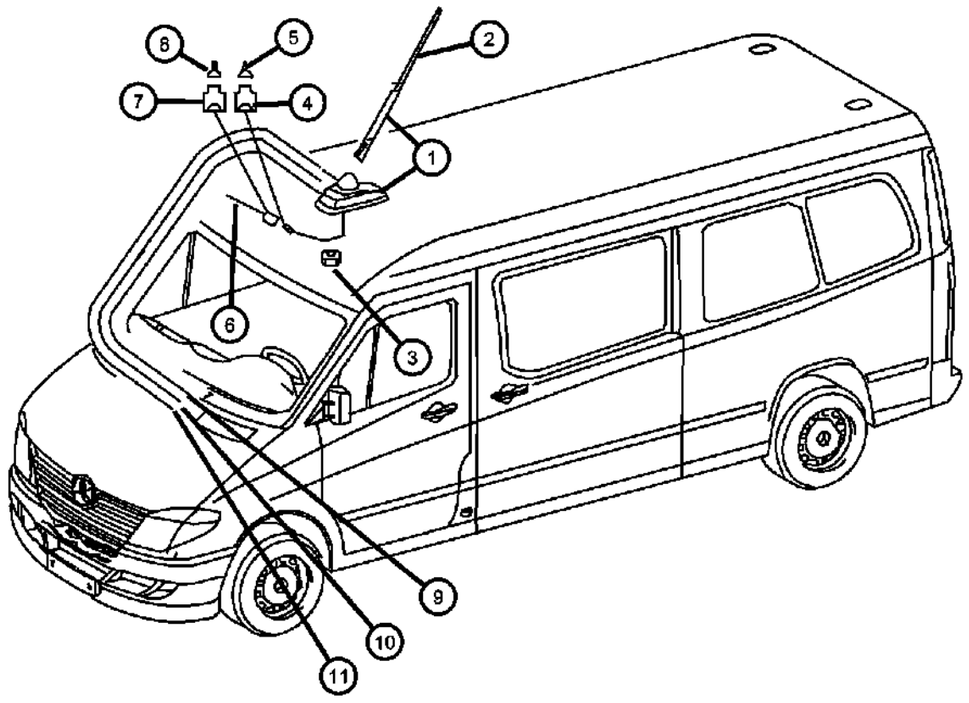

ITEM	PART NUMBER	QTY	LINE	SERIES	BODY	ENGINE	TRANS	TRIM	DESCRIPTION
1									ANTENNA
	68013417AA	1	2, 3, 6, 7	L		EG2, EXM	DGZ		With [RBV And Or RBE + XFV] Mobile Phone System
	68013419AA	1	2, 3, 6, 7	L		EG2, EXM	DGZ		[RBV Or RBE Or RA9] Radio / Mast & Base
2	68013421AA	1	2, 3, 6, 7	L		EG2, EXM	DGZ		MAST, Antenna
3									NUT
	68004878AA	1	3, 7	L	03, 05	EG2, EXM	DGZ		Antenna Base Mounting / [M6]
		1	2, 3, 6, 7	L	13, 15, 17, 53, 55	EG2, EXM	DGZ		Antenna Base Mounting / [M6]
4	05120685AA	1	2, 3, 6, 7	L		EG2, EXM	DGZ		INSULATOR, Antenna Amplifier / [1 Pin A2/18]
5	05120734AA	1	2, 3, 6, 7	L		EG2, EXM	DGZ		TERMINAL, Male, [1.0 - 2.5 MM2; A2/18]
6	68016034AA	1	2, 3, 6, 7	L	13, 15, 17, 53, 55	EG2, EXM	DGZ		CABLE, Antenna
7	68011322AA	2	2, 3, 6, 7	L		EG2, EXM	DGZ		ISOLATOR, Antenna Amplifier [A2/18]
8	05103871AA	AR	2, 3, 6, 7	L		EG2, EXM	DGZ		TERMINAL, Female, [1.5 - 2.5 MM2; A2/18]
9	68011524AA	1	2, 3, 6, 7	L		EG2, EXM	DGZ		CABLE, Antenna
10	68011558AA	1	2, 3, 6, 7	L		EG2, EXM	DGZ		CABLE, Antenna
11	68013437AA	1	2, 3, 6, 7	L		EG2, EXM	DGZ		CABLE, Antenna

SPRINTER (VB)

SERIES	LINE	BODY	ENGINE	TRANSMISSION
L = LOWLINE	3 = HD DODGE 2WD 6 = Lt. Duty DODGE 4WD 2 = Med. Duty DODGE 2WD 7 = Med. Duty DODGE 4WD	17 = VAN WHEEL BASE 7 55 = WAGON WHEEL BASE 5 15 = VAN WHEEL BASE 5 53 = 119 WB 13 = 119 WB 05 = CAB CHASSIS WHEEL BASE 5 03 = CAB CHASSIS WHEEL BASE 3	EG2 = 3.5L V6 Gas Engine EXM = 3.0L V6 Turbo Diesel Engine	DGZ = 5-Speed Auto W5A380 Transmission

AR = use ase required - = Non illustrrated part

<< RETURN TO GROUP INDEX

Speakers
Figure 8-2220

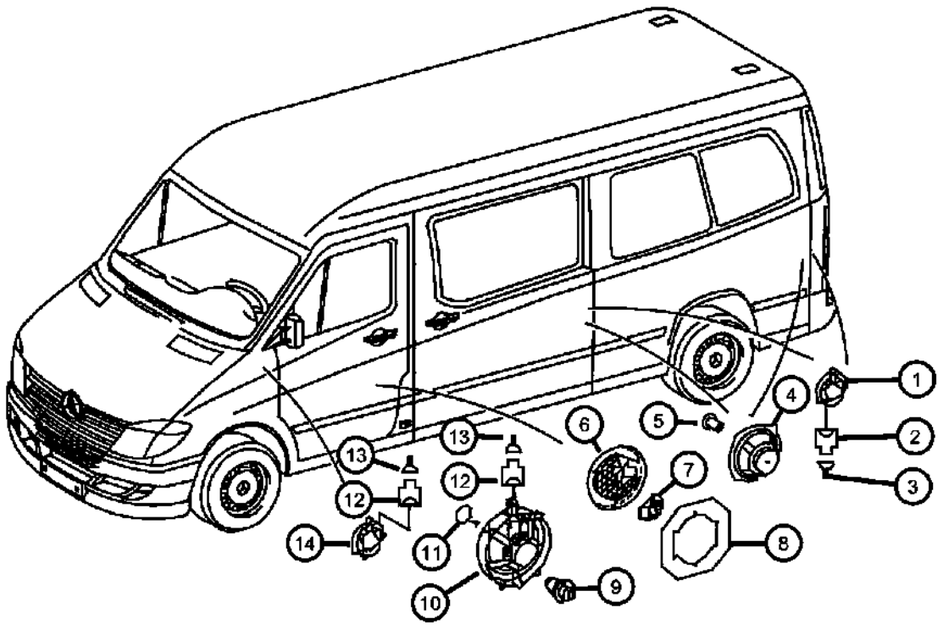

ITEM	PART NUMBER	QTY	LINE	SERIES	BODY	ENGINE	TRANS	TRIM	DESCRIPTION
1	68010541AA	4	2, 3, 6, 7	L		EG2, EXM	DGZ		SPEAKER, Rear
2	05101166AA	1	2, 3, 6, 7	L		EG2, EXM	DGZ		CONNECTOR
3									TERMINAL
	05103873AA	3	3, 7	L	03, 05	EG2, EXM	DGZ		
		3	2, 3, 6, 7	L	13, 15, 17, 53, 55	EG2, EXM	DGZ		
4	68013427AA	4	2, 3, 6, 7	L	53, 55	EG2, EXM	DGZ		SPEAKER, Rear
5	05133554AA	16	2, 3, 6, 7	L	13, 15, 17, 53, 55	EG2, EXM	DGZ		RIVET
6	1HB60XDVAA	4	2, 3, 6, 7	L	53, 55	EG2, EXM	DGZ		GRILLE, Speaker
7	1HB61XDVAA	1	2, 3, 6, 7	L	53, 55	EG2, EXM	DGZ		GRILLE, Speaker
8	68010291AA	1	2, 3, 6, 7	L	13, 15, 17, 53, 55	EG2, EXM	DGZ		REINFORCEMENT
9	68010062AA	8	3, 7	L		EG2, EXM	DGZ		RETAINER
10	68010059AA	2	2, 3, 6, 7	L		EG2, EXM	DGZ		SPEAKER, Front Door
11	68010063AA	8	2, 3, 6, 7	L		EG2, EXM	DGZ		SCREW, SCREW
12	05101166AA	1	2, 3, 6, 7	L		EG2, EXM	DGZ		CONNECTOR
13									TERMINAL
	05103873AA	3	3, 7	L	03, 05	EG2, EXM	DGZ		
		3	2, 3, 6, 7	L	13, 15, 17, 53, 55	EG2, EXM	DGZ		
14	68010541AA	4	2, 3, 6, 7	L		EXM, EG2	DGZ		SPEAKER, Rear
-15	68016759AA	2	2, 3, 6, 7	L		EG2, EXM	DGZ		CONNECTOR, Wiring, Speaker Contact [H4/83 / H4/80]

SPRINTER (VB)

SERIES	LINE	BODY	ENGINE	TRANSMISSION
L = LOWLINE	3 = HD DODGE 2WD 6 = Lt. Duty DODGE 4WD 2 = Med. Duty DODGE 2WD 7 = Med. Duty DODGE 4WD	17 = VAN WHEEL BASE 7 55 = WAGON WHEEL BASE 5 15 = VAN WHEEL BASE 5 53 = 119 WB 13 = 119 WB 05 = CAB CHASSIS WHEEL BASE 5 03 = CAB CHASSIS WHEEL BASE 3	EG2 = 3.5L V6 Gas Engine EXM = 3.0L V6 Turbo Diesel Engine	DGZ = 5-Speed Auto W5A380 Transmission

Carphone / Telecommunication
Figure 8-2505

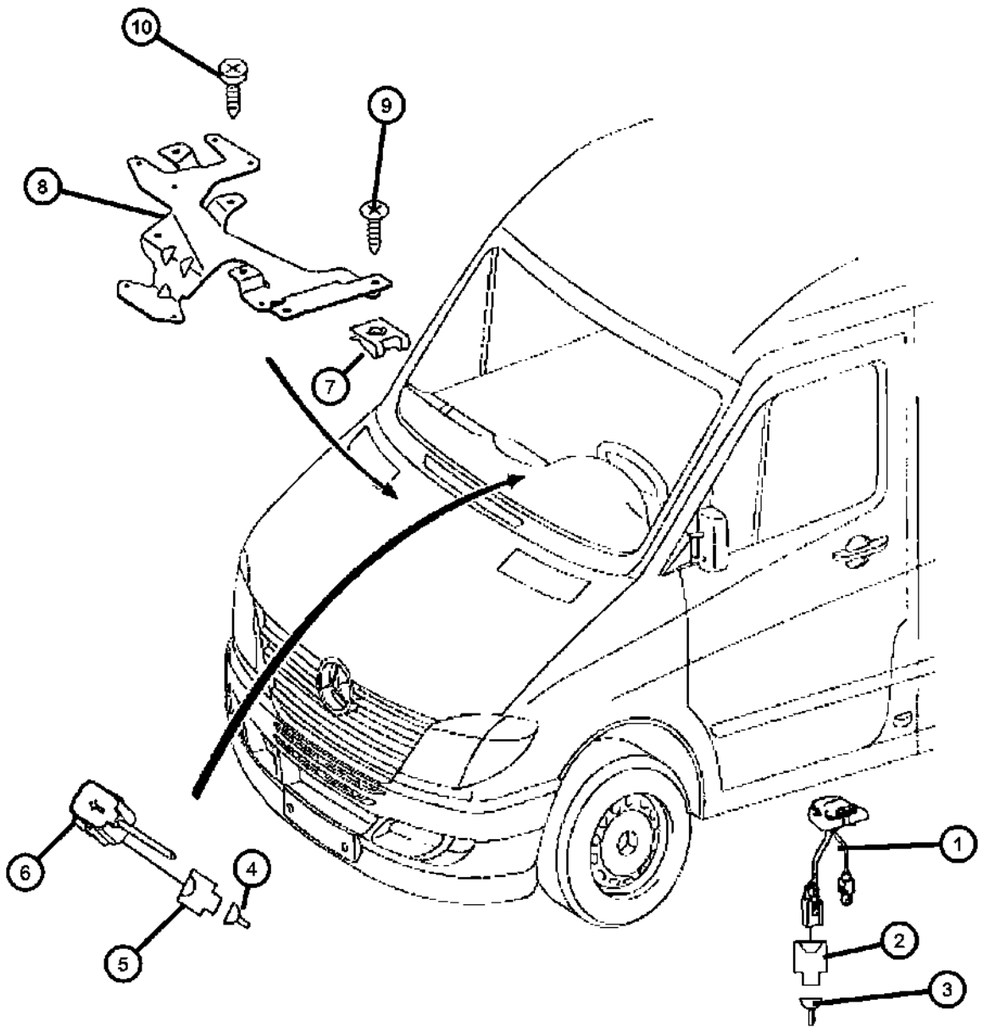

ITEM	PART NUMBER	QTY	LINE	SERIES	BODY	ENGINE	TRANS	TRIM	DESCRIPTION
1									PLATE, Intermediate
	68010539AA	1	3, 7	L	03, 05	EG2, EXM	DGZ		Mobile Phone Pre-Installation
		1	2, 3, 6, 7	L	13, 15, 17, 53, 55	EG2, EXM	DGZ		Mobile Phone Pre-Installation
2	68011378AA	1	2, 3, 6, 7	L		EG2, EXM	DGZ		CONNECTOR, CTEL Bracket 10-PIN;A34/7
3	68016758AA	AR	2, 3, 6, 7	L		EG2, EXM	DGZ		TERMINAL, 0.5 MM2;A34/7
4									TERMINAL
	05103873AA	3	3, 7	L	03, 05	EG2, EXM	DGZ		0.75 MM2 MQS;B25
		3	2, 3, 6, 7	L	13, 15, 17, 53, 55	EG2, EXM	DGZ		0.75 MM2 MQS;B25
5	05101166AA	1	2, 3, 6, 7	L		EG2, EXM	DGZ		CONNECTOR, Microphone Hands-Free System 2-PIN;B25
6	68010540AA	1	2, 3, 6, 7	L		EG2, EXM	DGZ		MICROPHONE, Audio
7									NUT, Spring
	68006573AA	3	3, 7	L	03, 05	EG2, EXM	DGZ		At Bracket
		3	2, 3, 6, 7	L	13, 15, 17, 53, 55	EG2, EXM	DGZ		At Bracket
8									BRACKET
	68010538AA	1	3, 7	L	03, 05	EG2, EXM	DGZ		Control Units
		1	2, 3, 6, 7	L	13, 15, 17, 53, 55	EG2, EXM	DGZ		Control Units
9	06104574AA	3	2, 3, 6, 7	L		EG2, EXM	DGZ		SCREW, Tapping, Bracket Mounting 4.8x16
10	06104566AA	4	2, 3, 6, 7	L	53, 55	EG2, EXM	DGZ		SCREW, Tapping, Plate to Console 4.2x13

SPRINTER (VB)

SERIES	LINE	BODY	ENGINE	TRANSMISSION
L = LOWLINE	3 = HD DODGE 2WD 6 = Lt. Duty DODGE 4WD 2 = Med. Duty DODGE 2WD 7 = Med. Duty DODGE 4WD	17 = VAN WHEEL BASE 7 55 = WAGON WHEEL BASE 5 15 = VAN WHEEL BASE 5 53 = 119 WB 13 = 119 WB 05 = CAB CHASSIS WHEEL BASE 5 03 = CAB CHASSIS WHEEL BASE 3	EG2 = 3.5L V6 Gas Engine EXM = 3.0L V6 Turbo Diesel Engine	DGZ = 5-Speed Auto W5A380 Transmission

Park Assist
Figure 8-2605

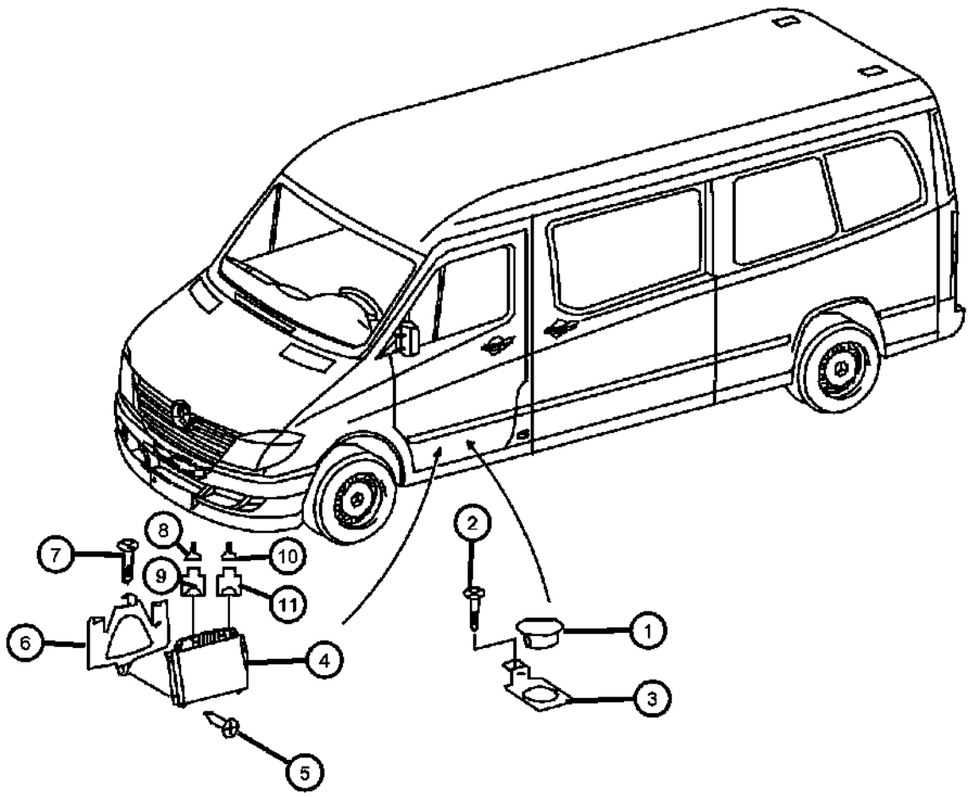

ITEM	PART NUMBER	QTY	LINE	SERIES	BODY	ENGINE	TRANS	TRIM	DESCRIPTION
1	68013409AA	1	2, 3, 6, 7	L	13, 15, 17, 53, 55	EG2, EXM	DGZ		BUZZER, Warning, Park Assist
2	06104566AA	2	2, 3, 6, 7	L	13, 15, 17, 53, 55	EG2, EXM	DGZ		SCREW, Tapping, Bracket Mounting 4.2x13
3	68013392AA	1	2, 3, 6, 7	L	13, 15, 17, 53, 55	EG2, EXM	DGZ		BRACKET, Buzzer
4	68013406AA	1	2, 3, 6, 7	L	13, 15, 17, 53, 55	EG2, EXM	DGZ		MODULE, Parking Assist
5	06104567AA	2	2, 3, 6, 7	L	13, 15, 17, 53, 55	EG2, EXM	DGZ		SCREW, Control Unit to Bracket 4.2x16
6	68013405AA	1	2, 3, 6, 7	L	13, 15, 17, 53, 55	EG2, EXM	DGZ		BRACKET, Control Unit
7	06104566AA	2	2, 3, 6, 7	L	13, 15, 17, 53, 55	EG2, EXM	DGZ		SCREW, Tapping, Bracket Mounting 4.2x13
8	05103882AA	1	2, 3, 6, 7	L					TERMINAL
9	05120838AA	1	2, 3, 6, 7	L		EG2, EXM	DGZ		CONNECTOR
10	05133369AA	AR	2, 3, 6, 7	L		EG2, EXM	DGZ		TERMINAL, Female
11	05120771AA	1	2, 3, 6, 7	L		EG2, EXM	DGZ		CONNECTOR

SPRINTER (VB)

SERIES	LINE	BODY	ENGINE	TRANSMISSION
L = LOWLINE	3 = HD DODGE 2WD 6 = Lt. Duty DODGE 4WD 2 = Med. Duty DODGE 2WD 7 = Med. Duty DODGE 4WD	17 = VAN WHEEL BASE 7 55 = WAGON WHEEL BASE 5 15 = VAN WHEEL BASE 5 53 = 119 WB 13 = 119 WB 05 = CAB CHASSIS WHEEL BASE 5 03 = CAB CHASSIS WHEEL BASE 3	EG2 = 3.5L V6 Gas Engine EXM = 3.0L V6 Turbo Diesel Engine	DGZ = 5-Speed Auto W5A380 Transmission

AR = use ase required - = Non illustrrated part

<< RETURN TO GROUP INDEX

Park Assist
Figure 8-2610

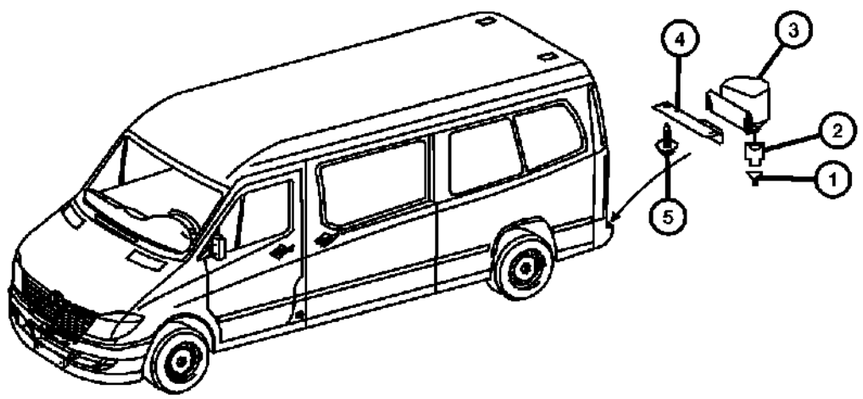

ITEM	PART NUMBER	QTY	LINE	SERIES	BODY	ENGINE	TRANS	TRIM	DESCRIPTION
1	05120860AA	1	2, 3, 6, 7	L		EG2, EXM	DGZ		GASKET
2	05120277AA	1	2, 3, 6, 7	L		EG2, EXM	DGZ		CONNECTOR, Wiring Repair, Backup Warning System 2-PIN;H3/4
3									HORN
	05135946AA	1	3, 7	L	03, 05	EG2, EXM	DGZ		End Crossmember Inner
		1	2, 3, 6, 7	L	13, 15, 17, 53, 55	EG2, EXM	DGZ		End Crossmember Inner
4									BRACKET, Horn
	05135596AA	1	3, 7	L	03, 05	EG2, EXM	DGZ		
		1	2, 3, 6, 7	L	13, 15, 17, 53, 55	EG2, EXM	DGZ		
5	06104565AA	2	2, 3, 6, 7	L		EG2, EXM	DGZ		SCREW, Horn to Bracket 4.2x9.5

SPRINTER (VB)

SERIES	LINE	BODY	ENGINE	TRANSMISSION
L = LOWLINE	3 = HD DODGE 2WD 6 = Lt. Duty DODGE 4WD 2 = Med. Duty DODGE 2WD 7 = Med. Duty DODGE 4WD	17 = VAN WHEEL BASE 7 55 = WAGON WHEEL BASE 5 15 = VAN WHEEL BASE 5 53 = 119 WB 13 = 119 WB 05 = CAB CHASSIS WHEEL BASE 5 03 = CAB CHASSIS WHEEL BASE 3	EG2 = 3.5L V6 Gas Engine EXM = 3.0L V6 Turbo Diesel Engine	DGZ = 5-Speed Auto W5A380 Transmission

Group - 009EG2

3.5L Gas; Engine

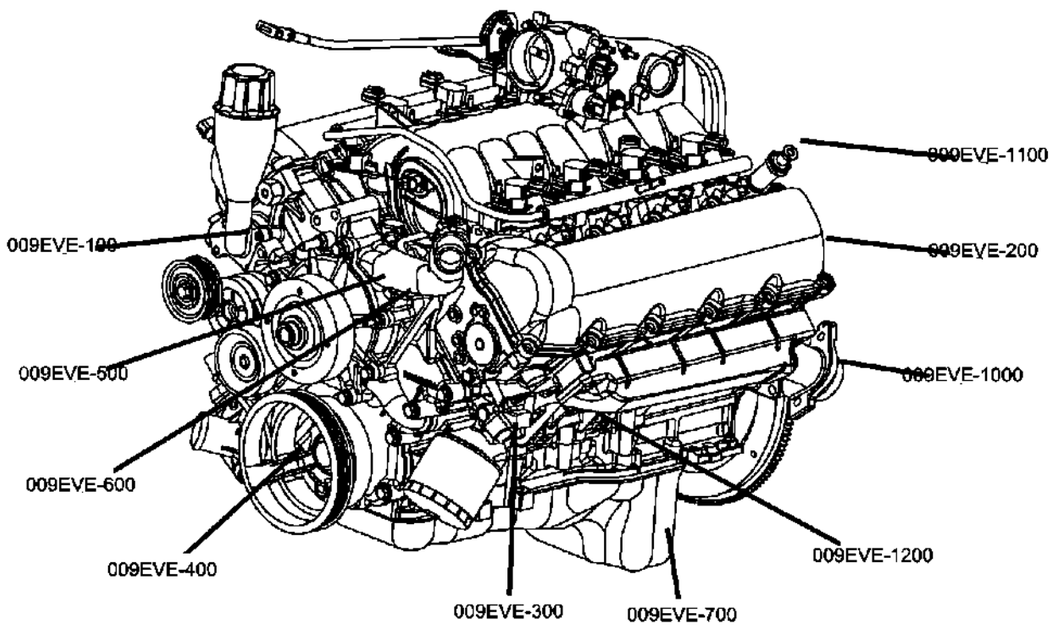

009EG2-100 Engine Identification	**009EG2-1000** Manifolds and Vacuum Fittings	**009EG2-1100** Crankcase Ventilation	**009EG2-1200** Engine Mounting
009EG2-200 Cylinder Head	**009EG2-300** Cylinder Block	**009EG2-400** Crankshaft, Piston, Drive Plate, Flywheel, and Damper	**009EG2-500** Camshaft and Valve
009EG2-600 Timing Belt/Chain and Cover and Balance Shaft	**009EG2-700** Engine Oiling, Oil Pan and Indicator (Dipstick)	**009EG2-800** Engine Oil Cooler	

Group - 009EG2 3.5L Gas; Engine

Illustration Title — Group-Fig. No.

Engine Identification
Engine Assembly And Identification 3.5L [EG2] ..... Fig. 009EG2 - 105

Cylinder Head
Cylinder Head 3.5L [EG2] ..... Fig. 009EG2 - 225

Cylinder Block
Cylinder Block And Hardware 3.5L [EG2] ..... Fig. 009EG2 - 305

Crankshaft, Piston, Drive Plate, Flywheel, and Damper
Crankshaft, Crankshaft Bearings, Damper And Flywheel 3.5L [EG2] ..... Fig. 009EG2 - 405
Pistons, Piston Rings, Connecting Rods And Connecting Rod Bearings 3.5L [EG2] ..... Fig. 009EG2 - 425

Camshaft and Valve
Camshafts And Camshaft Gears 3.5L [EG2] ..... Fig. 009EG2 - 505
Valvetrain 3.5L [EG2] ..... Fig. 009EG2 - 515

Timing Belt/Chain and Cover and Balance Shaft
Timing Case Cover 3.5L [EG2] ..... Fig. 009EG2 - 605
Timing System 3.5L [EG2] ..... Fig. 009EG2 - 625
Balance Shaft 3.5L [EG2] ..... Fig. 009EG2 - 645

Engine Oiling, Oil Pan and Indicator (Dipstick)
Engine Oiling Pump 3.5L [EG2] ..... Fig. 009EG2 - 705
Engine Oil Pan, Engine Oil Level Indicator And Related Parts 3.5L [EG2] ..... Fig. 009EG2 - 725
Engine Oil Filter 3.5L [EG2] ..... Fig. 009EG2 - 745

Engine Oil Cooler
Engine Oil Cooler 3.5L [EG2] ..... Fig. 009EG2 - 805

Manifolds and Vacuum Fittings
Exhaust Manifolds And Heat Sheilds 3.5L [EG2] ..... Fig. 009EG2 - 1005
Intake Manifold 3.5L [EG2] ..... Fig. 009EG2 - 1025

Crankcase Ventilation
Crankcase Ventilation 3.5L [EG2] ..... Fig. 009EG2 - 1105

Engine Mounting
Engine Mounting Right Side RWD/2WD 3.5L [EG2] ..... Fig. 009EG2 - 1230
Engine Mounting Left Side RWD/2WD 3.5L [EG2] ..... Fig. 009EG2 - 1250

Engine Assembly And Identification 3.5L [EG2]
Figure 009EG2-105

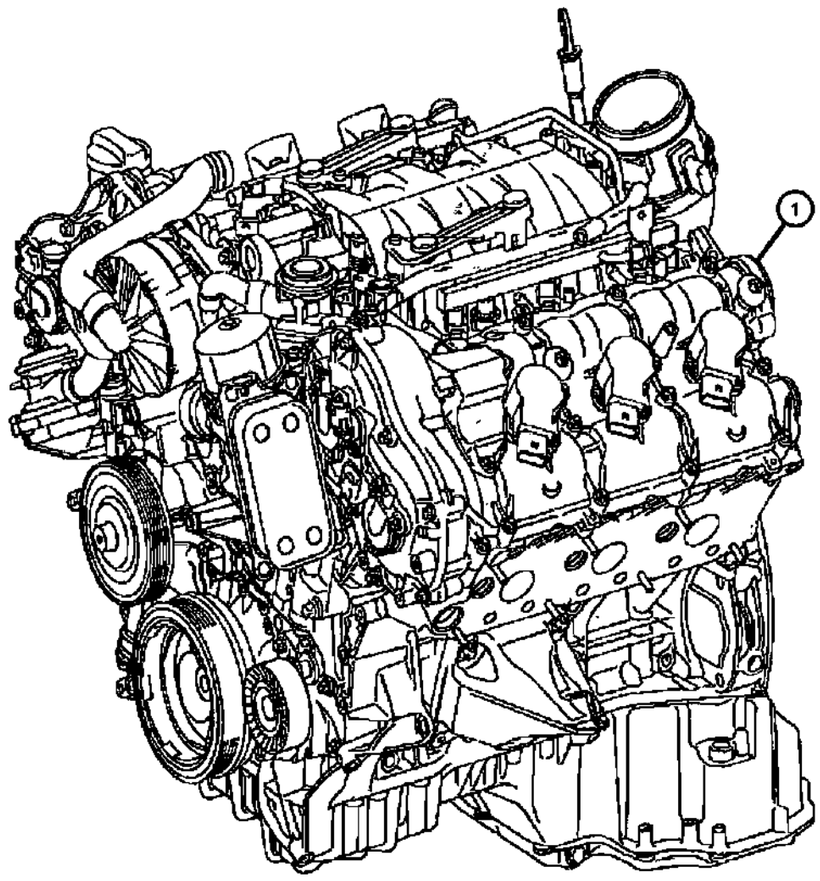

ITEM	PART NUMBER	QTY	LINE	SERIES	BODY	ENGINE	TRANS	TRIM	DESCRIPTION
NOTE:The New Replacement Engine Will Have A Different Upper, Lower Oil Pan And Vibration Damper. These Parts Must Be Removed From The									
Sales Codes:									
[DGZ]=5 Speed Automatic Trans									
[EG2]=3.5L V-6 Gas Engine [Mercedes Benz]									
1	68013133AA	1	2, 3, 6, 7			EG2	DGZ		ENGINE, Complete, See Note, See Note:

SPRINTER (VB)

SERIES	LINE	BODY	ENGINE	TRANSMISSION
L = LOWLINE	3 = HD DODGE 2WD 6 = Lt. Duty DODGE 4WD 2 = Med. Duty DODGE 2WD 7 = Med. Duty DODGE 4WD	17 = VAN WHEEL BASE 7 55 = WAGON WHEEL BASE 5 15 = VAN WHEEL BASE 5 53 = 119 WB 13 = 119 WB 05 = CAB CHASSIS WHEEL BASE 5 03 = CAB CHASSIS WHEEL BASE 3	EG2 = 3.5L V6 Gas Engine EXM = 3.0L V6 Turbo Diesel Engine	DGZ = 5-Speed Auto W5A380 Transmission

Cylinder Head 3.5L [EG2]
Figure 009EG2-225

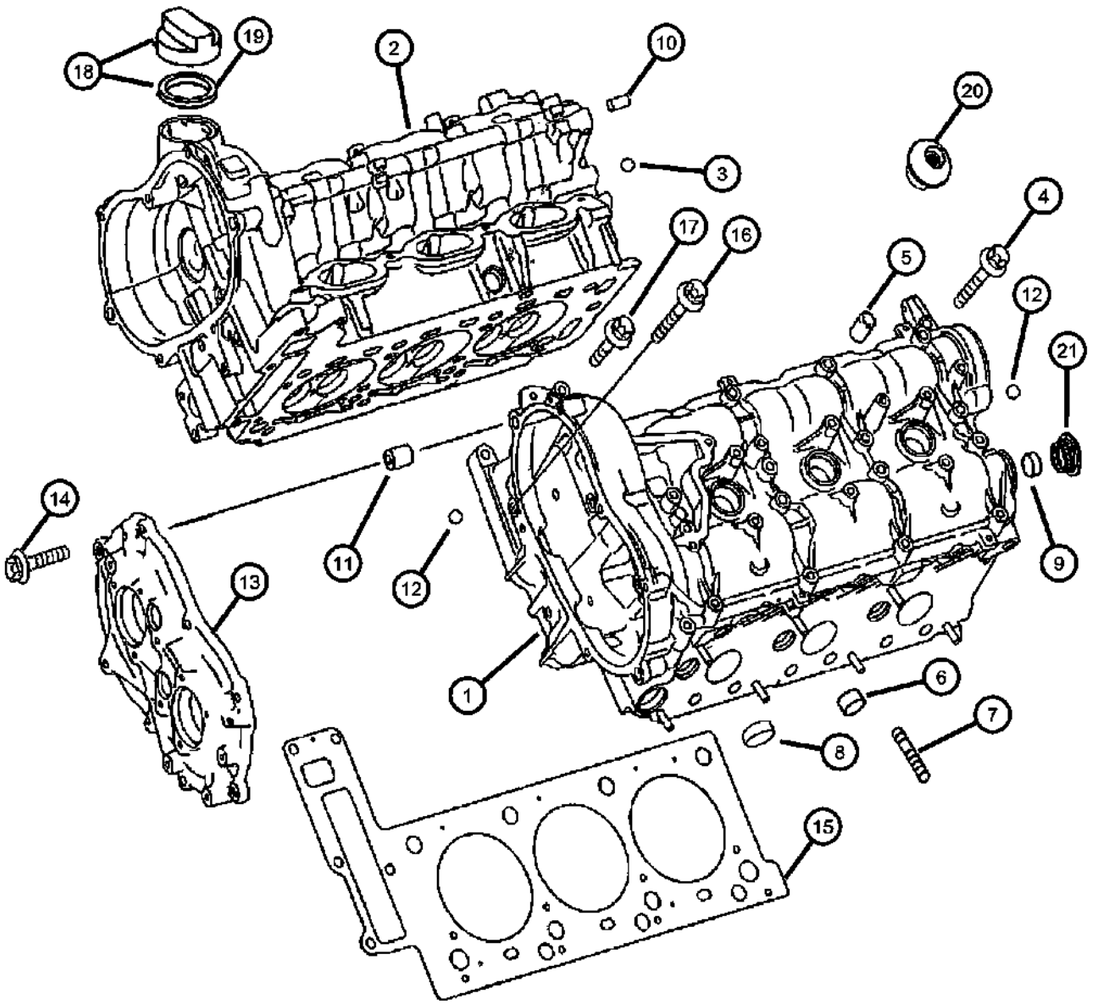

ITEM	PART NUMBER	QTY	LINE	SERIES	BODY	ENGINE	TRANS	TRIM	DESCRIPTION
NOTE:									
Sales Codes:									
[DGZ]=5 Speed Automatic Transmission [W5A380]									
[EG2]=3.5L V-6 Gas Engine - [Mercedes Benz]									
1	68005676AA	1	2, 3, 6, 7			EG2	DGZ		HEAD, Cylinder, Left
2	68005627AA	1	2, 3, 6, 7			EG2	DGZ		HEAD, Cylinder, Right
3	05080045AA	1	2, 3, 6, 7			EG2	DGZ		BALL
4	05073688AB	18	2, 3, 6, 7			EG2	DGZ		BOLT, [M7x40], Right & Left
5	68005643AA	2	2, 3, 6, 7			EG2	DGZ		PIN, Dowel, Valve Cover To Cylinder Head, Right & Left
6	05098815AA	8	2, 3, 6, 7			EG2	DGZ		PLUG, Coolant Core Plug
7	05099276AA	7	2, 3, 6, 7			EG2	DGZ		STUD, Exhaust Manifold To Head, Right & Left
8	05098818AA	1	2, 3, 6, 7			EG2	DGZ		PLUG, Expansion
9	05098815AA	2	2, 3, 6, 7			EG2	DGZ		PLUG
10	68005645AA	2	2, 3, 6, 7			EG2	DGZ		PIN, Dowel
11	05097092AA	2	2, 3, 6, 7			EG2	DGZ		PIN, Dowel
12	05080045AA	2	2, 3, 6, 7			EG2	DGZ		BALL, Oil Duct & Timing Chain Cover
13									COVER, Timing Belt
	68005647AA	1	2, 3, 6, 7			EG2	DGZ		Left
	68005682AA	1	2, 3, 6, 7			EG2	DGZ		Right
14	06104008AA	7	2, 3, 6, 7			EG2	DGZ		SCREW
15									GASKET, Cylinder Head, Left
	68005671AA	1	2, 3, 6, 7			EG2	DGZ		Left
	68005687AA	1	2, 3, 6, 7			EG2	DGZ		Right
16	68005672AA	8	2, 3, 6, 7			EG2	DGZ		BOLT, Cylinder Head To Block
17	68005673AA	2	2, 3, 6, 7			EG2	DGZ		SCREW
18	05175447AA	1	2, 3, 6, 7			EG2, EXM	DGZ		CAP, Oil Filler
19	05080088AA	1	2, 3, 6, 7			EG2	DGZ		SEAL, Oil Fill Cap
20	05101527AA	4	2, 3, 6, 7			EG2	DGZ		GROMMET
21	68005669AA	2	2, 3, 6, 7			EG2	DGZ		PLUG, Expansion

SPRINTER (VB)

SERIES	LINE	BODY	ENGINE	TRANSMISSION
L = LOWLINE	3 = HD DODGE 2WD 6 = Lt. Duty DODGE 4WD 2 = Med. Duty DODGE 2WD 7 = Med. Duty DODGE 4WD	17 = VAN WHEEL BASE 7 55 = WAGON WHEEL BASE 5 15 = VAN WHEEL BASE 5 53 = 119 WB 13 = 119 WB 05 = CAB CHASSIS WHEEL BASE 5 03 = CAB CHASSIS WHEEL BASE 3	EG2 = 3.5L V6 Gas Engine EXM = 3.0L V6 Turbo Diesel Engine	DGZ = 5-Speed Auto W5A380 Transmission

Cylinder Block And Hardware 3.5L [EG2]
Figure 009EG2-305

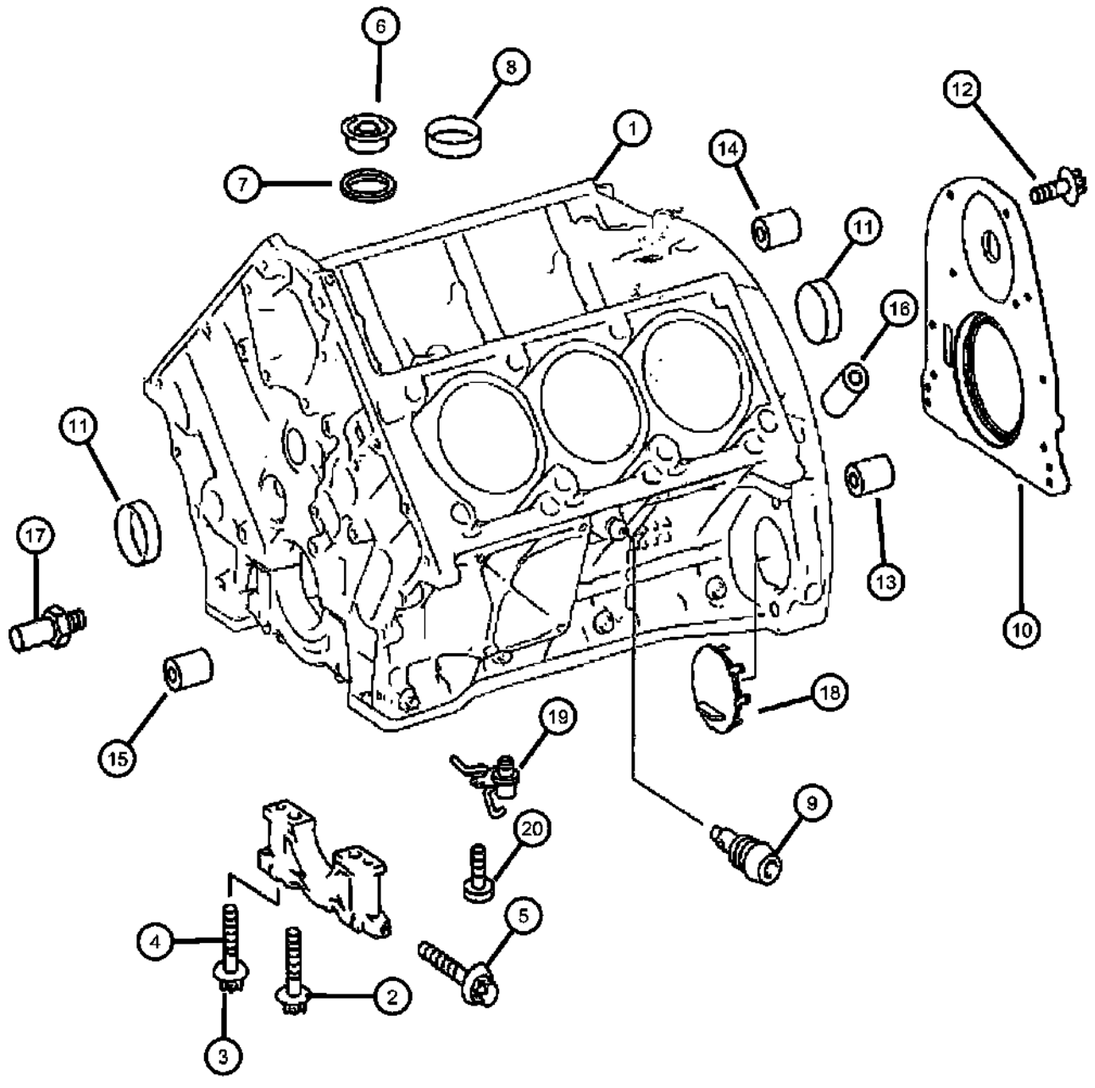

ITEM	PART NUMBER	QTY	LINE	SERIES	BODY	ENGINE	TRANS	TRIM	DESCRIPTION

NOTE:If Engine Block Is Damage Or Short Block Is Needed, Complete Engine Must Be Ordered. Short Block Is Not Serviced.
Sales Codes:
[DGZ]=5 Speed Automatic Transmission [W5A380]
[EG2]=3.5L V-6 Gas Engine - [Mercedes Benz]

1	68005669AA	2							BLOCK, Engine Cylinder, See Note, (NOT SERVICED)
2	05096962AA	8	2, 3, 6, 7			EG2	DGZ		BOLT, Main Bearing Cap, M10x90
3	05096961AA	8	2, 3, 6, 7			EG2	DGZ		BOLT, Main Bearing Cap, M8x75
4	05098813AA	6	2, 3, 6, 7			EG2	DGZ		BOLT, Main Bearing Cap, M8x40
5	68005187AA	2	2, 3, 6, 7			EG2	DGZ		BOLT, [M8X70 -10.9]
6	05073837AA	1	2, 3, 6, 7			EG2	DGZ		PLUG, Screw, Cylinder Block
7	05101157AA	1	2, 3, 6, 7			EG2	DGZ		O RING
8	05073860AA	2	2, 3, 6, 7			EG2	DGZ		PLUG, Expansion, Expansion Plug To Oil Passage
9	05097164AA	2	2, 3, 6, 7			EG2	DGZ		PLUG, Drain, Coolant Drain Plug In Block
10	68013857AA	1	2, 3, 6, 7			EG2	DGZ		RETAINER, Crankshaft Rear Oil Seal
11	05098815AA	2	2, 3, 6, 7			EG2	DGZ		PLUG, Rear Block Expansion Plug
12	06104075AA	11	2, 3, 6, 7			EG2	DGZ		BOLT, Cover To Block [M6x12]
13	05099279AA	2	2, 3, 6, 7			EG2	DGZ		DOWEL PIN
14	05097167AA	2	2, 3, 6, 7			EG2	DGZ		DOWEL PIN
15	05097092AA	2	2, 3, 6, 7			EG2	DGZ		PIN, Dowel
16	05097166AA	4	2, 3, 6, 7			EG2	DGZ		PIN, Dowel
17	05098422AA	4	2, 3, 6, 7			EG2	DGZ		PIN, Chain Tensioner
18	68013692AA	1	2, 3, 6, 7			EG2	DGZ		COVER
19	68013867AA	3	2, 3, 6, 7			EG2	DGZ		JET, Piston Oil Cooler
20	68006033AA	3	2, 3, 6, 7			EG2	DGZ		BOLT, [M6x16.5MM]

SPRINTER (VB)

SERIES	LINE	BODY	ENGINE	TRANSMISSION
L = LOWLINE	3 = HD DODGE 2WD 6 = Lt. Duty DODGE 4WD 2 = Med. Duty DODGE 2WD 7 = Med. Duty DODGE 4WD	17 = VAN WHEEL BASE 7 55 = WAGON WHEEL BASE 5 15 = VAN WHEEL BASE 5 53 = 119 WB 13 = 119 WB 05 = CAB CHASSIS WHEEL BASE 5 03 = CAB CHASSIS WHEEL BASE 3	EG2 = 3.5L V6 Gas Engine EXM = 3.0L V6 Turbo Diesel Engine	DGZ = 5-Speed Auto W5A380 Transmission

Crankshaft, Crankshaft Bearings, Damper And Flywheel 3.5L [EG2]
Figure 009EG2-405

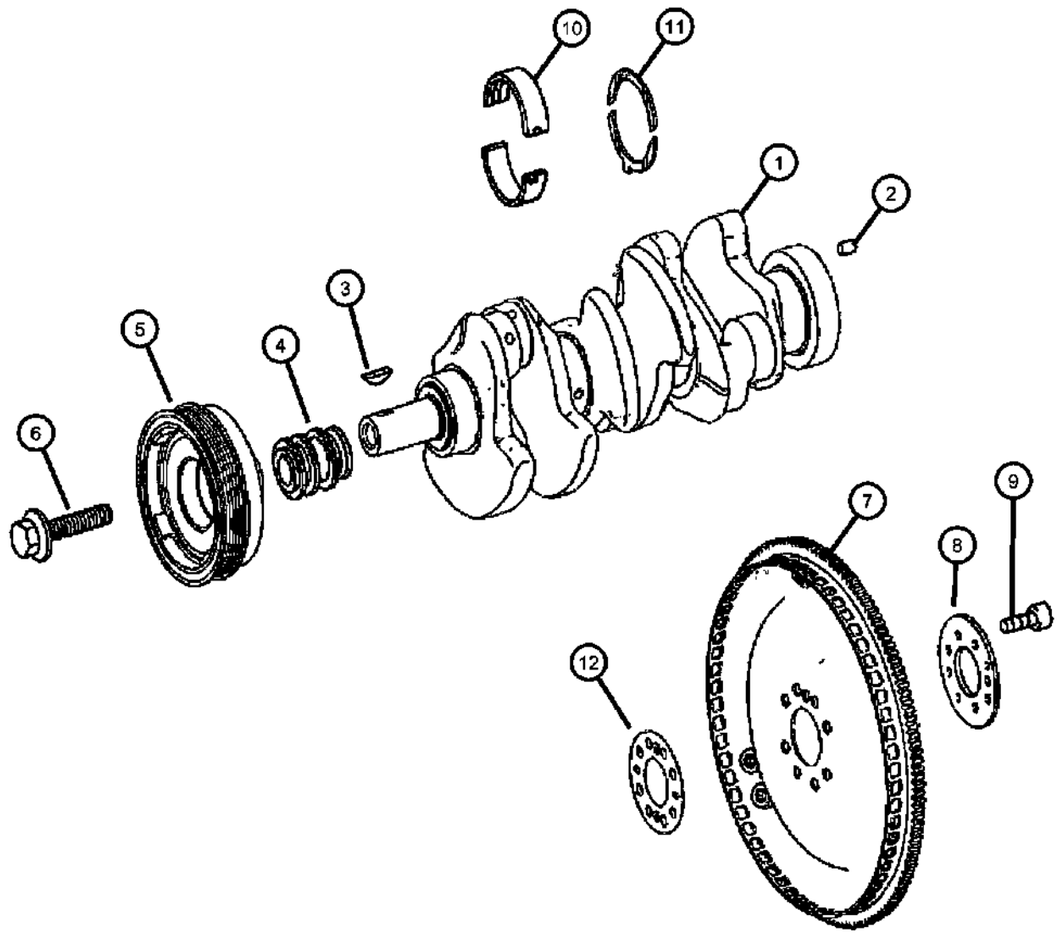

ITEM	PART NUMBER	QTY	LINE	SERIES	BODY	ENGINE	TRANS	TRIM	DESCRIPTION

NOTE:Bearings Only Serviced By Color, Standard Size Only. Please Refer To Service Manual For Additional Information. If Crankshaft Is Damage
Sales Codes:
[DGZ]=5 Speed Automatic Transmission [W5A380]
[EG2]=3.5L V-6 Gas Engine - [Mercedes Benz]

1	68005554AA	1	2, 3, 6, 7			EG2	DGZ		CRANKSHAFT
2	05080024AA	1	2, 3, 6, 7			EG2	DGZ		DOWEL PIN
3	05101484AA	1	2, 3, 6, 7			EG2	DGZ		KEY, Woodruff
4	68005557AA	1	2, 3, 6, 7			EG2	DGZ		SPROCKET, Crankshaft
5									DAMPER, Crankshaft
	68005278AA	1	2, 3, 6, 7			EG2	DGZ		Without [HBD]
	68005582AA	1	2, 3, 6, 7			EG2	DGZ		With [HBD]
6	05098411AA	1	2, 3, 6, 7			EG2	DGZ		BOLT, Hex Head
7	68005618AA	1	2, 3, 6, 7			EG2	DGZ		FLEX PLATE
8	05139838AA	1	2, 3, 6, 7			EG2	DGZ		PLATE, Flexplate Backing
9	05159260AA	8	2, 3, 6, 7			EG2	DGZ		SCREW, [10x1x18.5]
10									BEARING, Crankshaft
	04862608AA	3	2, 3, 6, 7			EG2	DGZ		Color [Blue]
	04862609AA	3	2, 3, 6, 7			EG2	DGZ		Color [Yellow]
	04862610AA	3	2, 3, 6, 7			EG2	DGZ		Color [Red]
11									THRUST BEARING
	68005567AA	2	2, 3, 6, 7			EG2	DGZ		Upper
	68005569AA	2	2, 3, 6, 7			EG2	DGZ		Lower
12	68005616AA	1	2, 3, 6, 7			EG2	DGZ		PLATE, Flexplate Backing

SPRINTER (VB)

SERIES	LINE	BODY	ENGINE	TRANSMISSION
L = LOWLINE	3 = HD DODGE 2WD 6 = Lt. Duty DODGE 4WD 2 = Med. Duty DODGE 2WD 7 = Med. Duty DODGE 4WD	17 = VAN WHEEL BASE 7 55 = WAGON WHEEL BASE 5 15 = VAN WHEEL BASE 5 53 = 119 WB 13 = 119 WB 05 = CAB CHASSIS WHEEL BASE 5 03 = CAB CHASSIS WHEEL BASE 3	EG2 = 3.5L V6 Gas Engine EXM = 3.0L V6 Turbo Diesel Engine	DGZ = 5-Speed Auto W5A380 Transmission

AR = use ase required - = Non illustrrated part

<< RETURN TO GROUP INDEX

Pistons, Piston Rings, Connecting Rods And Connecting Rod Bearings 3.5L [EG2]
Figure 009EG2-425

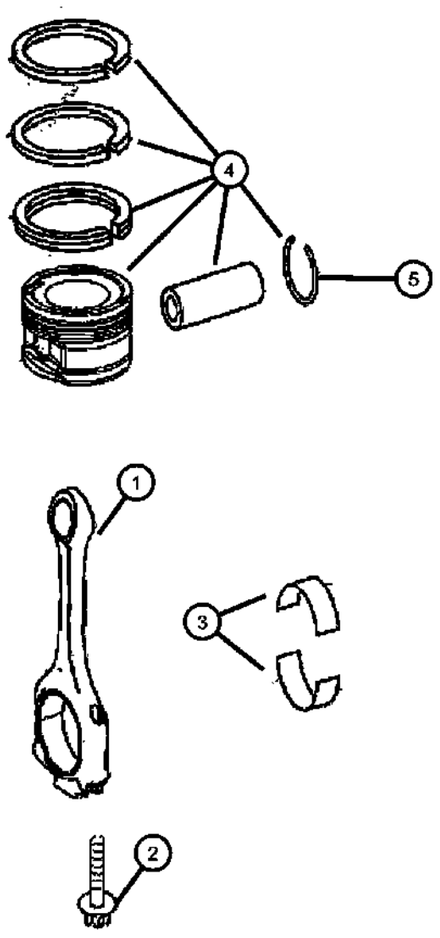

ITEM	PART NUMBER	QTY	LINE	SERIES	BODY	ENGINE	TRANS	TRIM	DESCRIPTION
NOTE:Piston & Rings Are Only Serviced Standard Size. Size Listed In Catalog. If Cylinder Bore Is Larger Than Size Listed For Pistons Service Pa									
Sales Codes:									
[DGZ]=5 Speed Automatic Transmission [W5A380]									
[EG2]=3.5L V-6 Gas Engine - [Mercedes Benz]									
1	68005585AA	6	2, 3, 6, 7			EG2	DGZ		ROD, Connecting
2	68005588AA	12	2, 3, 6, 7			EG2	DGZ		BOLT, Connecting Rod
3	68005594AA	6	2, 3, 6, 7			EG2	DGZ		BEARING KIT, Connecting Rod
4									PISTON, See Note:
	68005595AA	6	2, 3, 6, 7			EG2	DGZ		Cylinder Bore Size [92.9 MM]
	68028234AA	6	2, 3, 6, 7			EG2	DGZ		Cylinder Bore Size [93.0 MM]
5	05098880AA	3	2, 3, 6, 7			EG2	DGZ		RING, Piston Pin

SPRINTER (VB)

SERIES	LINE	BODY	ENGINE	TRANSMISSION
L = LOWLINE	3 = HD DODGE 2WD 6 = Lt. Duty DODGE 4WD 2 = Med. Duty DODGE 2WD 7 = Med. Duty DODGE 4WD	17 = VAN WHEEL BASE 7 55 = WAGON WHEEL BASE 5 15 = VAN WHEEL BASE 5 53 = 119 WB 13 = 119 WB 05 = CAB CHASSIS WHEEL BASE 5 03 = CAB CHASSIS WHEEL BASE 3	EG2 = 3.5L V6 Gas Engine EXM = 3.0L V6 Turbo Diesel Engine	DGZ = 5-Speed Auto W5A380 Transmission

Camshafts And Camshaft Gears 3.5L [EG2]
Figure 009EG2-505

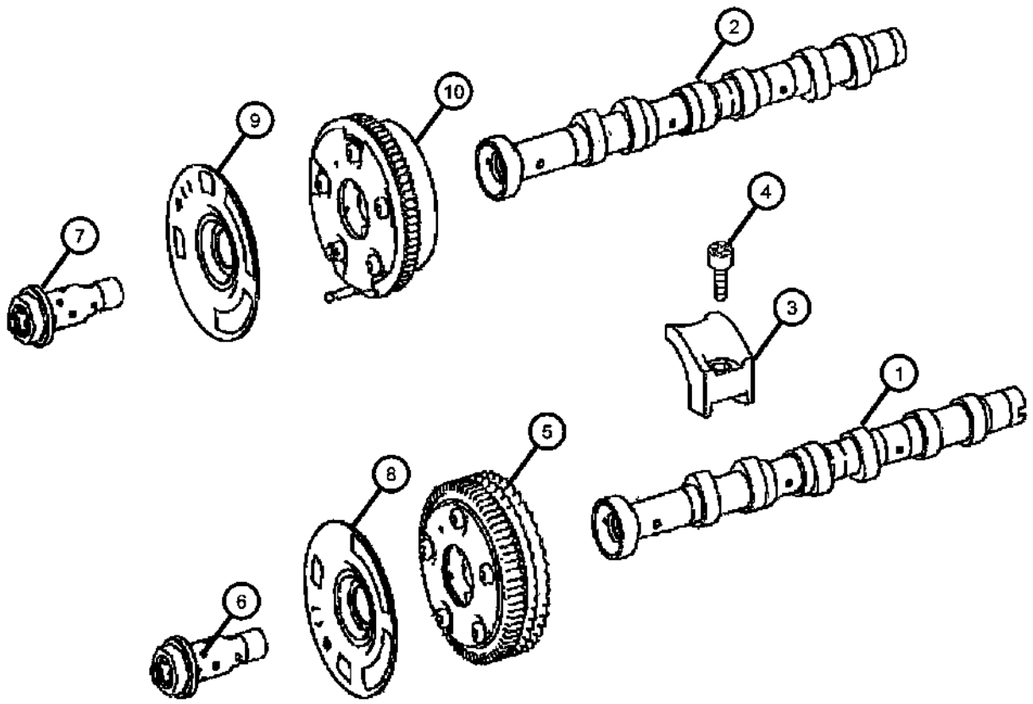

ITEM	PART NUMBER	QTY	LINE	SERIES	BODY	ENGINE	TRANS	TRIM	DESCRIPTION

NOTE:
Sales Codes:
[DGZ]=5 Speed Automatic Transmission [W5A380]
[EG2]=3.5L V-6 Gas Engine - [Mercedes Benz]

1									CAMSHAFT, Intake
	68005650AA	1	2, 3, 6, 7			EG2	DGZ		Left
	68005683AA	1	2, 3, 6, 7			EG2	DGZ		Right
2									CAMSHAFT, Exhaust
	68005652AA	1	2, 3, 6, 7			EG2	DGZ		Right
	68005685AA	1	2, 3, 6, 7			EG2	DGZ		Left
3	68005654AA	4	2, 3, 6, 7			EG2	DGZ		CAP, Camshaft Bearing
4	05137503AA	2	2, 3, 6, 7			EG2	DGZ		SCREW, [M6x25MM], Right & Left
5									GEAR, Camshaft
	68013890AA	1	2, 3, 6, 7			EG2	DGZ		Intake, Left
	68013899AA	1	2, 3, 6, 7			EG2	DGZ		Intake, Right
6	68013891AA	2	2, 3, 6, 7			EG2	DGZ		VALVEIntake
7	68013895AA	2	2, 3, 6, 7			EG2	DGZ		VALVEExhaust
8									PHASER, Camshaft
	68013892AA	1	2, 3, 6, 7			EG2	DGZ		Intake, Left
	68013900AA	1	2, 3, 6, 7			EG2	DGZ		Intake, Right
9									PHASER, Camshaft
	68013896AA	1	2, 3, 6, 7			EG2	DGZ		Exhaust, Left
	68013901AA	1	2, 3, 6, 7			EG2	DGZ		Exhaust, Right
10	68013893AA	1	2, 3, 6, 7			EG2	DGZ		GEAR, CamshaftExhaust

SPRINTER (VB)

SERIES	LINE	BODY	ENGINE	TRANSMISSION
L = LOWLINE	3 = HD DODGE 2WD 6 = Lt. Duty DODGE 4WD 2 = Med. Duty DODGE 2WD 7 = Med. Duty DODGE 4WD	17 = VAN WHEEL BASE 7 55 = WAGON WHEEL BASE 5 15 = VAN WHEEL BASE 5 53 = 119 WB 13 = 119 WB 05 = CAB CHASSIS WHEEL BASE 5 03 = CAB CHASSIS WHEEL BASE 3	EG2 = 3.5L V6 Gas Engine EXM = 3.0L V6 Turbo Diesel Engine	DGZ = 5-Speed Auto W5A380 Transmission

Valvetrain 3.5L [EG2]
Figure 009EG2-515

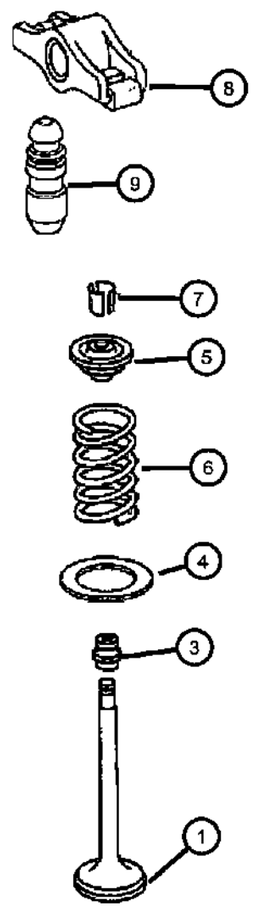

ITEM	PART NUMBER	QTY	LINE	SERIES	BODY	ENGINE	TRANS	TRIM	DESCRIPTION
NOTE:									
Sales Codes:									
[DGZ]=5 Speed Automatic Transmission [W5A380]									
[EG2]=3.5L V-6 Gas Engine - [Mercedes Benz]									
1	68005655AA	6	2, 3, 6, 7			EG2	DGZ		VALVE, Intake, StandardIntake, Right & Left
-2	68005657AA	6	2, 3, 6, 7			EG2	DGZ		VALVE, Exhaust, StandardExhaust, Right & Left
3	05175438AA	6	2, 3, 6, 7			EG2	DGZ		SEAL, Valve GuideIntake And Exhaust
4	68005660AA	12	2, 3, 6, 7			EG2	DGZ		SEAT, Valve Spring
5	68005662AA	12	2, 3, 6, 7			EG2	DGZ		RETAINER, Valve Spring
6	68005663AA	12	2, 3, 6, 7			EG2	DGZ		SPRING, Valve
7	05175399AA	24	2, 3, 6, 7			EG2	DGZ		LOCK, Valve Spring Retainer
8	68005648AA	12	2, 3, 6, 7			EG2	DGZ		ARM, Rocker
9	05175440AA	12	2, 3, 6, 7			EG2	DGZ		ADJUSTER, Valve Lash

SPRINTER (VB)

SERIES	LINE	BODY	ENGINE	TRANSMISSION
L = LOWLINE	3 = HD DODGE 2WD 6 = Lt. Duty DODGE 4WD 2 = Med. Duty DODGE 2WD 7 = Med. Duty DODGE 4WD	17 = VAN WHEEL BASE 7 55 = WAGON WHEEL BASE 5 15 = VAN WHEEL BASE 5 53 = 119 WB 13 = 119 WB 05 = CAB CHASSIS WHEEL BASE 5 03 = CAB CHASSIS WHEEL BASE 3	EG2 = 3.5L V6 Gas Engine EXM = 3.0L V6 Turbo Diesel Engine	DGZ = 5-Speed Auto W5A380 Transmission

Timing Case Cover 3.5L [EG2]
Figure 009EG2-605



ITEM	PART NUMBER	QTY	LINE	SERIES	BODY	ENGINE	TRANS	TRIM	DESCRIPTION
NOTE:									
Sales Codes:									
[DGZ]=5 Speed Automatic Transmission [W5A380]									
[EG2]=3.5L V-6 Gas Engine - [Mercedes Benz]									
1	68013873AA	1	2, 3, 6, 7			EG2	DGZ		COVER, Timing Case
2	05073675AB	1	2, 3, 6, 7			EG2	DGZ		SEAL, Crankshaft Oil, Front
3	68013874AA	1	2, 3, 6, 7			EG2	DGZ		COVER
4	05096976AA	1	2, 3, 6, 7			EG2	DGZ		SEAL
5	06104463AA	1	2, 3, 6, 7			EG2	DGZ		PLUG
6	06104683AA	2	2, 3, 6, 7			EG2	DGZ		BOLT, M6X1.0X23.0
7	68013875AA	1	2, 3, 6, 7			EG2	DGZ		GASKET
8	06104035AA	1	2, 3, 6, 7			EG2	DGZ		BOLT, Hex Flange Head, M8X1.25X90.00
-9									SCREW
	06104028AA	3	2, 3, 6, 7			EG2	DGZ		[M8x45]
	06104032AA	6	2, 3, 6, 7			EG2	DGZ		[M8x65]
10	05098920AA	1	2, 3, 6, 7			EG2	DGZ		SEAL
11	68013876AA	1	2, 3, 6, 7			EG2	DGZ		SEAL

SPRINTER (VB)

SERIES	LINE	BODY	ENGINE	TRANSMISSION
L = LOWLINE	3 = HD DODGE 2WD 6 = Lt. Duty DODGE 4WD 2 = Med. Duty DODGE 2WD 7 = Med. Duty DODGE 4WD	17 = VAN WHEEL BASE 7 55 = WAGON WHEEL BASE 5 15 = VAN WHEEL BASE 5 53 = 119 WB 13 = 119 WB 05 = CAB CHASSIS WHEEL BASE 5 03 = CAB CHASSIS WHEEL BASE 3	EG2 = 3.5L V6 Gas Engine EXM = 3.0L V6 Turbo Diesel Engine	DGZ = 5-Speed Auto W5A380 Transmission

Timing System 3.5L [EG2]
Figure 009EG2-625

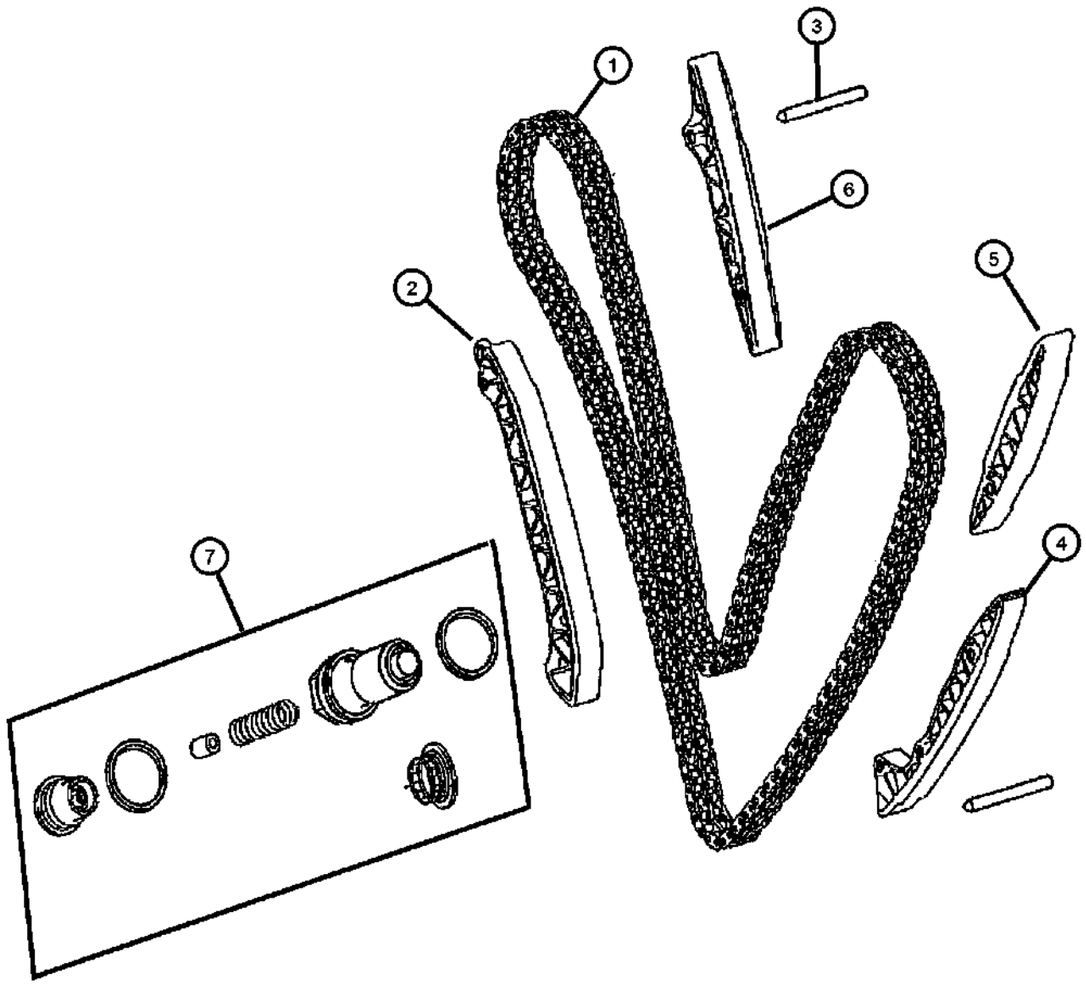

ITEM	PART NUMBER	QTY	LINE	SERIES	BODY	ENGINE	TRANS	TRIM	DESCRIPTION

NOTE:Internal Or Seals Parts ForTensioner Are Not Serviced. Must Replace Tensioner.
Sales Codes:
[DGZ]=5 Speed Automatic Transmission [W5A380]
[EG2]=3.5L V-6 Gas Engine - [Mercedes Benz]

1	68013908AA	1	2, 3, 6, 7	EG2	DGZ		CHAIN, Timing
2	68013902AA	1	2, 3, 6, 7	EG2	DGZ		GUIDE, Timing Chain
3	05098422AA	4	2, 3, 6, 7	EG2	DGZ		PIN, Chain Tensioner, Guide To Cylinder Head
4	68013904AA	1	2, 3, 6, 7	EG2	DGZ		GUIDE, Timing Chain
5	68013906AA	1	2, 3, 6, 7	EG2	DGZ		GUIDE, Timing Chain
6	68013907AA	1	2, 3, 6, 7	EG2	DGZ		GUIDE, Timing Chain
7	68013910AA	1	2, 3, 6, 7	EG2	DGZ		TENSIONER, Chain

SPRINTER (VB)

SERIES	LINE	BODY	ENGINE	TRANSMISSION
L = LOWLINE	3 = HD DODGE 2WD 6 = Lt. Duty DODGE 4WD 2 = Med. Duty DODGE 2WD 7 = Med. Duty DODGE 4WD	17 = VAN WHEEL BASE 7 55 = WAGON WHEEL BASE 5 15 = VAN WHEEL BASE 5 53 = 119 WB 13 = 119 WB 05 = CAB CHASSIS WHEEL BASE 5 03 = CAB CHASSIS WHEEL BASE 3	EG2 = 3.5L V6 Gas Engine EXM = 3.0L V6 Turbo Diesel Engine	DGZ = 5-Speed Auto W5A380 Transmission

Balance Shaft 3.5L [EG2]
Figure 009EG2-645

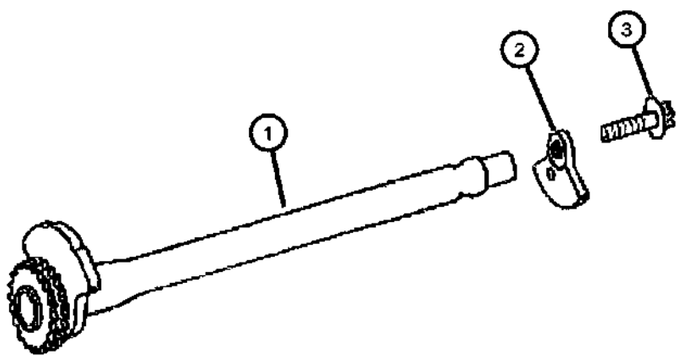

ITEM	PART NUMBER	QTY	LINE	SERIES	BODY	ENGINE	TRANS	TRIM	DESCRIPTION

NOTE:
Sales Codes:
[DGZ]=5 Speed Automatic Transmission [W5A380]
[EG2]=3.5L V-6 Gas Engine - [Mercedes Benz]

1	68005572AA	1	2, 3, 6, 7			EG2	DGZ		SHAFT, Balance
2	68005580AA	1	2, 3, 6, 7			EG2	DGZ		COUNTERWEIGHT, Balance shaft
3	68005581AA	1	2, 3, 6, 7			EG2	DGZ		SCREW

SPRINTER (VB)

SERIES	LINE	BODY	ENGINE	TRANSMISSION
L = LOWLINE	3 = HD DODGE 2WD 6 = Lt. Duty DODGE 4WD 2 = Med. Duty DODGE 2WD 7 = Med. Duty DODGE 4WD	17 = VAN WHEEL BASE 7 55 = WAGON WHEEL BASE 5 15 = VAN WHEEL BASE 5 53 = 119 WB 13 = 119 WB 05 = CAB CHASSIS WHEEL BASE 5 03 = CAB CHASSIS WHEEL BASE 3	EG2 = 3.5L V6 Gas Engine EXM = 3.0L V6 Turbo Diesel Engine	DGZ = 5-Speed Auto W5A380 Transmission

Engine Oiling Pump 3.5L [EG2]
Figure 009EG2-705

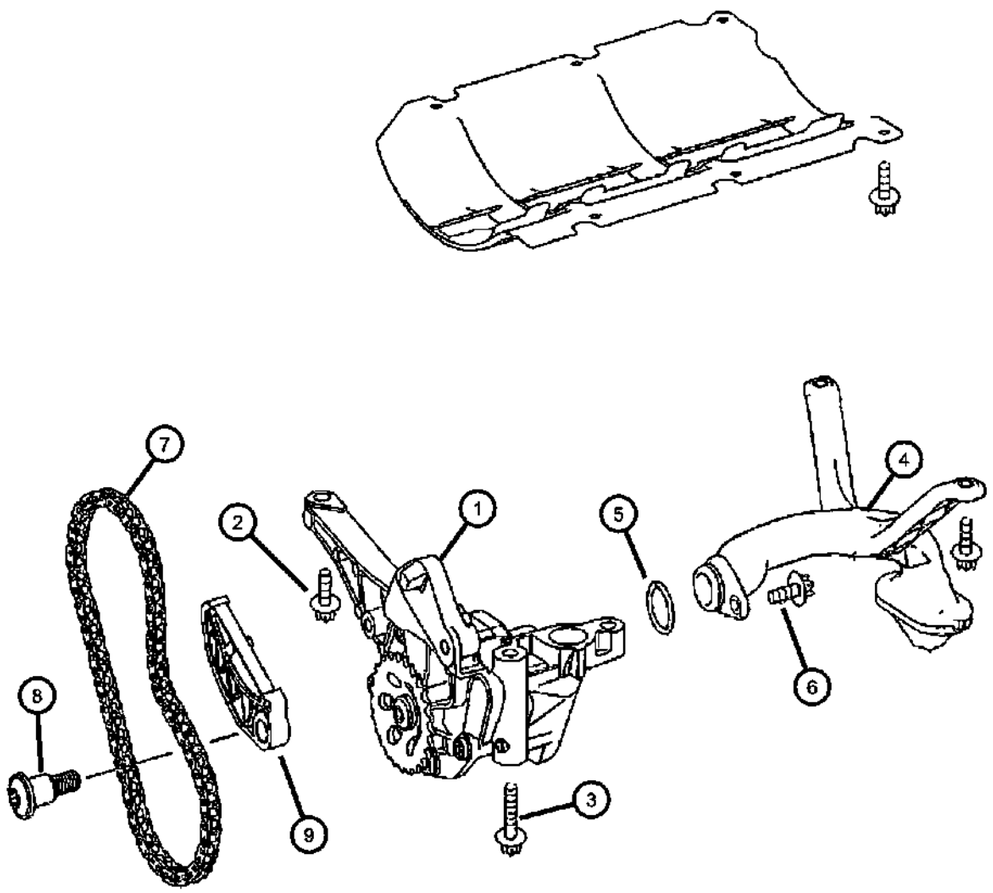

ITEM	PART NUMBER	QTY	LINE	SERIES	BODY	ENGINE	TRANS	TRIM	DESCRIPTION
NOTE: Sales Codes: [DGZ]=5 Speed Automatic Transmission [W5A380] [EG2]=3.5L V-6 Gas Engine - [Mercedes Benz]									
1	68013912AA	1	2, 3, 6, 7			EG2	DGZ		PUMP, Engine Oil
2	05175526AA	2	2, 3, 6, 7			EG2	DGZ		BOLT, Oil Pump To Crankcase
3	06104163AA	1	2, 3, 6, 7			EG2	DGZ		SCREW, Oil Pump To Crankcase
4	68013915AA	1	2, 3, 6, 7			EG2	DGZ		TUBE, Oil Pickup
5	68013916AA	1	2, 3, 6, 7			EG2	DGZ		SEAL, Oil Pick Up Tube, Oil Pickup Tube To Oil Pump
6	06104007AA	2	2, 3, 6, 7			EG2	DGZ		SCREW, Oil Pick Up Tube To Oil Pump
7	68004876AA	1	2, 3, 6, 7			EG2	DGZ		CHAIN, Pump Drive
8	68013918AA	1	2, 3, 6, 7			EG2	DGZ		BOLT
9	68013919AA	1	2, 3, 6, 7			EG2	DGZ		GUIDE, Timing Chain

SPRINTER (VB)

SERIES	LINE	BODY	ENGINE	TRANSMISSION
L = LOWLINE	3 = HD DODGE 2WD 6 = Lt. Duty DODGE 4WD 2 = Med. Duty DODGE 2WD 7 = Med. Duty DODGE 4WD	17 = VAN WHEEL BASE 7 55 = WAGON WHEEL BASE 5 15 = VAN WHEEL BASE 5 53 = 119 WB 13 = 119 WB 05 = CAB CHASSIS WHEEL BASE 5 03 = CAB CHASSIS WHEEL BASE 3	EG2 = 3.5L V6 Gas Engine EXM = 3.0L V6 Turbo Diesel Engine	DGZ = 5-Speed Auto W5A380 Transmission

Engine Oil Pan, Engine Oil Level Indicator And Related Parts 3.5L [EG2]
Figure 009EG2-725

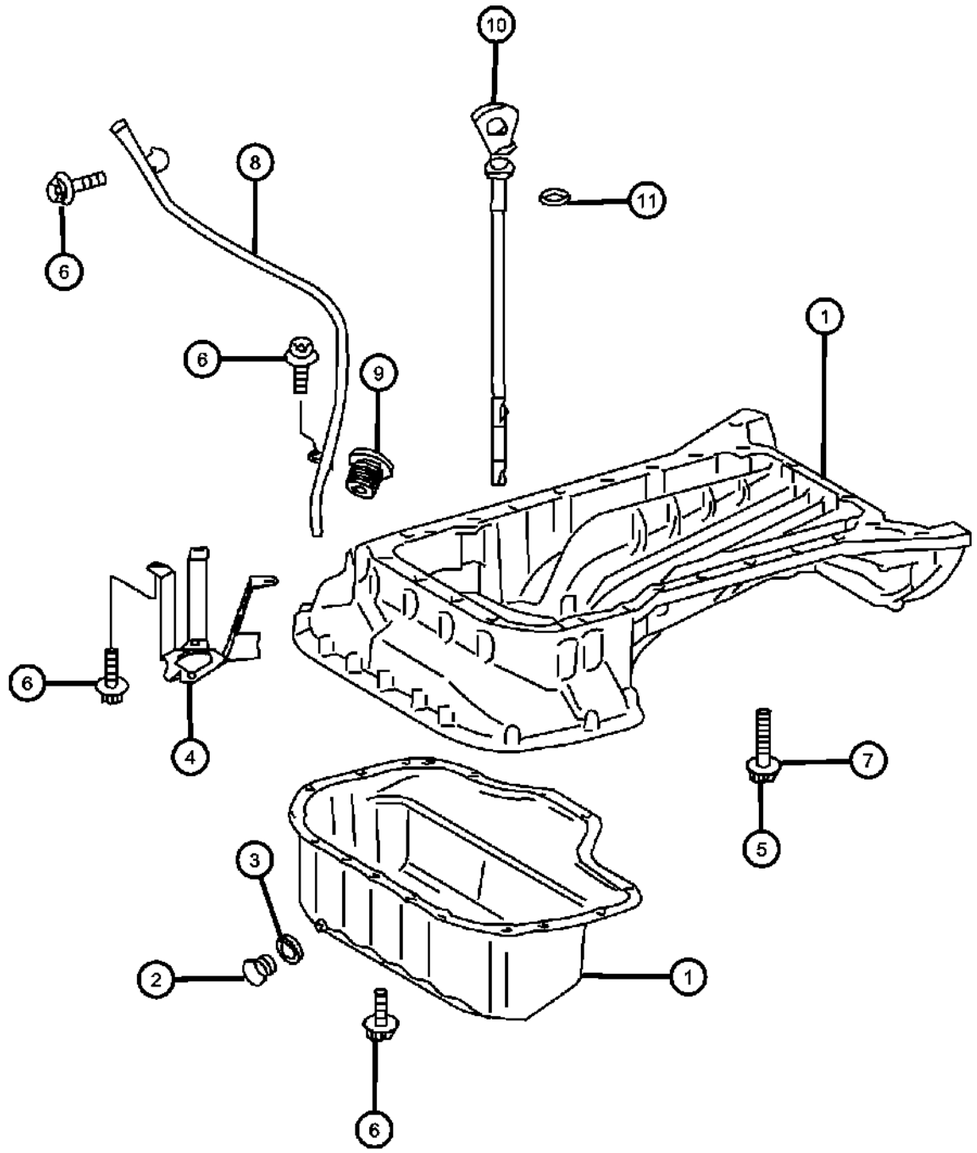

ITEM	PART NUMBER	QTY	LINE	SERIES	BODY	ENGINE	TRANS	TRIM	DESCRIPTION
NOTE:									
Sales Codes:									
[DGZ]=5 Speed Automatic Transmission [W5A380]									
[EG2]=3.5L V-6 Gas Engine - [Mercedes Benz]									
1									PAN, Oil
	68013877AA	1	2, 3, 6, 7			EG2	DGZ		Upper
	68013881AA	1	2, 3, 6, 7			EG2	DGZ		Lower
2	05073945AA	1	2, 3, 6, 7			EG2	DGZ		PLUG, Oil Drain
3	05073946AA	1	2, 3, 6, 7			EG2	DGZ		GASKET, Drain Plug
4	68013878AA	1	2, 3, 6, 7			EG2	DGZ		BRACKET
5	06104025AA	2	2, 3, 6, 7			EG2	DGZ		BOLT, Hex Flange Head, M8x1.25x30, Oil Pan To Cylinder Block, Mounting
6									BOLT
	06104075AA	1	2, 3, 6, 7			EG2	DGZ		Engine Oil Indicator Tube To Cylinder Head [M6x12], Mounting
	06104682AA	1	2, 3, 6, 7			EG2	DGZ		Engine Oil Indicator Tube To Oil Pan [M6x19], Mounting
		3	2, 3, 6, 7			EG2	DGZ		Bracket [M6x19], Mounting
		13	2, 3, 6, 7			EG2	DGZ		Lower Oil Pan To Upper Oil Pan [M6x19], Mounting
7									SCREW
	05073692AA	2	2, 3, 6, 7			EG2	DGZ		Oil Pan To Crankcase Cover Rear, Mounting
	06104007AA	16	2, 3, 6, 7			EG2	DGZ		Oil Pan To Cylinder Block [M6x25], Mounting
		6	2, 3, 6, 7			EG2	DGZ		Oil Pan To Timing Case Cover [M6x25], Mounting
8	68013859AA	1	2, 3, 6, 7			EG2	DGZ		TUBE, Engine Oil Indicator
9	05096486AA	1	2, 3, 6, 7			EG2, EXM	DGZ		SEAL, Engine Oil Indicator tube
10	68013866AA	1	2, 3, 6, 7			EG2	DGZ		INDICATOR, Engine Oil Level
11	05073943AA	1	2, 3, 6, 7			EG2, EXM	DGZ		O RING, Engine Oil Indicator

SPRINTER (VB)

SERIES	LINE	BODY	ENGINE	TRANSMISSION
L = LOWLINE	3 = HD DODGE 2WD 6 = Lt. Duty DODGE 4WD 2 = Med. Duty DODGE 2WD 7 = Med. Duty DODGE 4WD	17 = VAN WHEEL BASE 7 55 = WAGON WHEEL BASE 5 15 = VAN WHEEL BASE 5 53 = 119 WB 13 = 119 WB 05 = CAB CHASSIS WHEEL BASE 5 03 = CAB CHASSIS WHEEL BASE 3	EG2 = 3.5L V6 Gas Engine EXM = 3.0L V6 Turbo Diesel Engine	DGZ = 5-Speed Auto W5A380 Transmission

Engine Oil Filter 3.5L [EG2]
Figure 009EG2-745

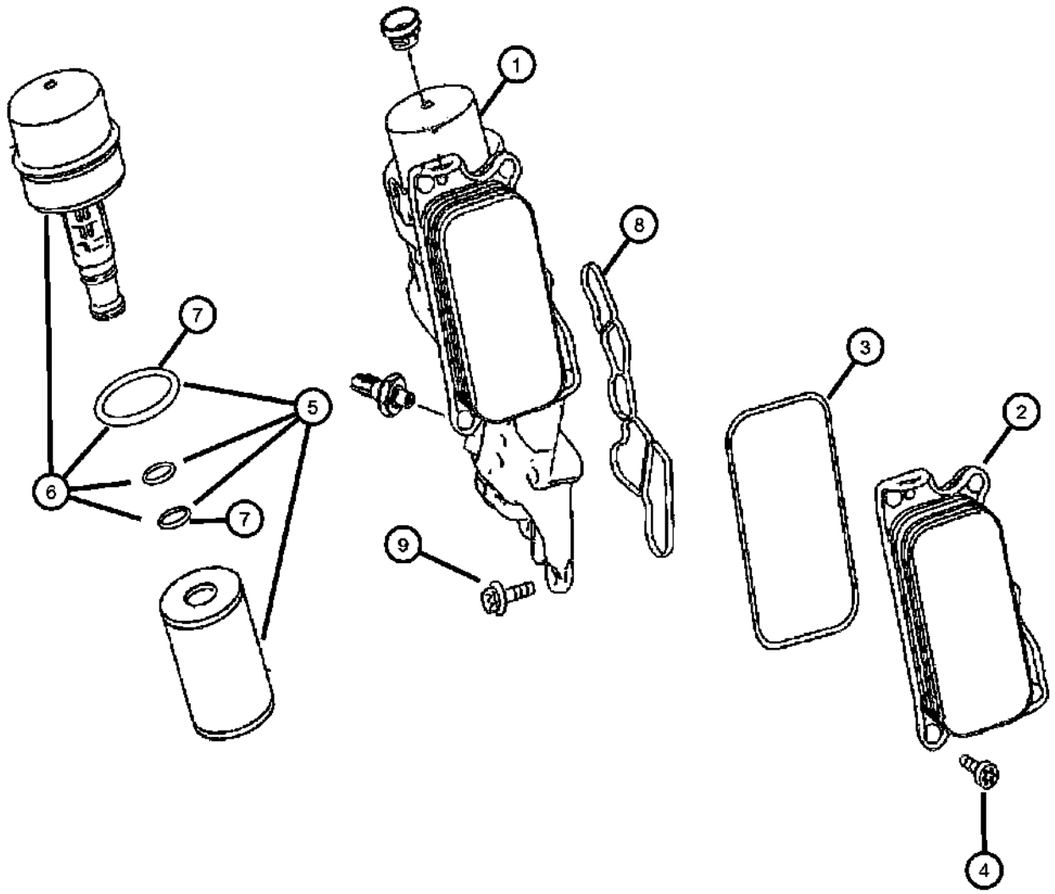

ITEM	PART NUMBER	QTY	LINE	SERIES	BODY	ENGINE	TRANS	TRIM	DESCRIPTION
NOTE:									
Sales Codes:									
[DGZ]=5 Speed Automatic Transmission [W5A380]									
[EG2]=3.5L V-6 Gas Engine - [Mercedes Benz]									
1	68013921AA	1	2, 3, 6, 7			EG2	DGZ		COOLER, Oil, Incluides:Oil Filter, Oil Cooler, Oil Filter / Oil Cooler Adapter To Engine
2	68013923AA	1	2, 3, 6, 7			EG2	DGZ		COOLER, Oil, Oil Cooler Only
3	68013924AA	1	2, 3, 6, 7			EG2	DGZ		GASKET, Oil Cooler
4	06104675AA	5	2, 3, 6, 7			EG2	DGZ		BOLT, Pan Head, M6.0X1.00X14.00
5	05102905AB	1	2, 3, 6, 7			EG2	DGZ		FILTER, Engine Oil
6	68013926AA	1	2, 3, 6, 7			EG2	DGZ		CAP AND FILTER ASSEMBLY, OIL, Includes: Cap & Orings
7	05080242AA	1	2, 3, 6, 7			EG2	DGZ		O RING
8	68013928AA	1	2, 3, 6, 7			EG2	DGZ		GASKET, Oil Filter Adapter
9									SCREW
	05137660AA	2	2, 3, 6, 7			EG2, EXM	DGZ		[M8x80]
	06104036AA	2	2, 3, 6, 7			EG2	DGZ		[M8x100]
	06104698AA	1	2, 3, 6, 7			EG2	DGZ		[M8.0x1.25x54.0]
	05073680AA	1	2, 3, 6, 7						Torx Head / Self Taping Thread [29MM] [M8x10.9]

SPRINTER (VB)

SERIES	LINE	BODY	ENGINE	TRANSMISSION
L = LOWLINE	3 = HD DODGE 2WD 6 = Lt. Duty DODGE 4WD 2 = Med. Duty DODGE 2WD 7 = Med. Duty DODGE 4WD	17 = VAN WHEEL BASE 7 55 = WAGON WHEEL BASE 5 15 = VAN WHEEL BASE 5 53 = 119 WB 13 = 119 WB 05 = CAB CHASSIS WHEEL BASE 5 03 = CAB CHASSIS WHEEL BASE 3	EG2 = 3.5L V6 Gas Engine EXM = 3.0L V6 Turbo Diesel Engine	DGZ = 5-Speed Auto W5A380 Transmission

Engine Oil Cooler 3.5L [EG2]
Figure 009EG2-805

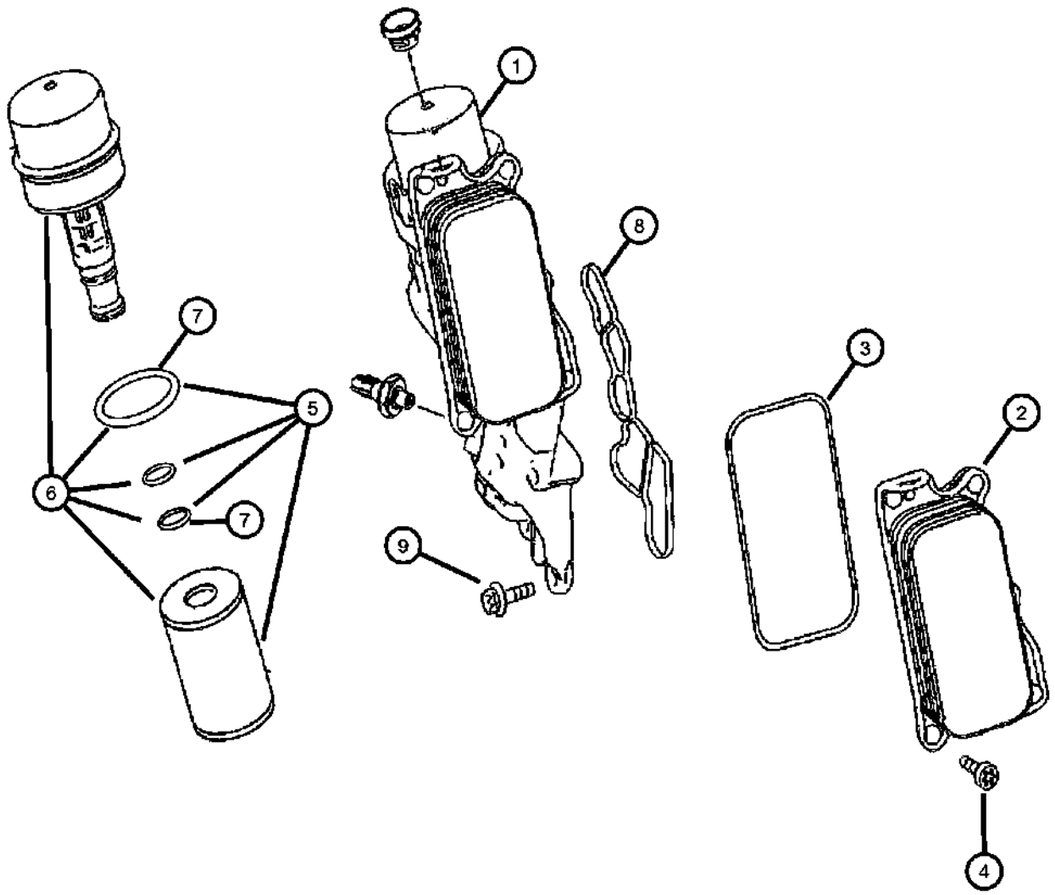

ITEM	PART NUMBER	QTY	LINE	SERIES	BODY	ENGINE	TRANS	TRIM	DESCRIPTION
NOTE:									
Sales Codes:									
[DGZ]=5 Speed Automatic Transmission [W5A380]									
[EG2]=3.5L V-6 Gas Engine - [Mercedes Benz]									
1	68013921AA	1	2, 3, 6, 7			EG2	DGZ		COOLER, Oil, Incluides:Oil Filter, Oil Cooler, Oil Filter / Oil Cooler Adapter To Engine
2	68013923AA	1	2, 3, 6, 7			EG2	DGZ		COOLER, Oil, Oil Cooler Only
3	68013924AA	1	2, 3, 6, 7			EG2	DGZ		GASKET, Oil Cooler
4	06104675AA	5	2, 3, 6, 7			EG2	DGZ		BOLT, Pan Head, M6.0X1.00X14.00
5	05102905AB	1	2, 3, 6, 7			EG2	DGZ		FILTER, Engine Oil
6	68013926AA	1	2, 3, 6, 7			EG2	DGZ		CAP AND FILTER ASSEMBLY, OIL, Includes: Cap, Oil Filter & Orings
7	05080242AA	1	2, 3, 6, 7			EG2	DGZ		O RING
8	68013928AA	1	2, 3, 6, 7			EG2	DGZ		GASKET, Oil Filter Adapter
9									SCREW
	05073680AA	1	2, 3, 6, 7						Torx Head / Self Taping Thread [29MM] [M8x10.9]
	05137660AA	2	2, 3, 6, 7			EG2, EXM	DGZ		[M8x80]
	06104036AA	2	2, 3, 6, 7			EG2	DGZ		[M8x100]
	06104698AA	1	2, 3, 6, 7			EG2	DGZ		[M8.0x1.25x54.0]

SPRINTER (VB)

SERIES	LINE	BODY	ENGINE	TRANSMISSION
L = LOWLINE	3 = HD DODGE 2WD 6 = Lt. Duty DODGE 4WD 2 = Med. Duty DODGE 2WD 7 = Med. Duty DODGE 4WD	17 = VAN WHEEL BASE 7 55 = WAGON WHEEL BASE 5 15 = VAN WHEEL BASE 5 53 = 119 WB 13 = 119 WB 05 = CAB CHASSIS WHEEL BASE 5 03 = CAB CHASSIS WHEEL BASE 3	EG2 = 3.5L V6 Gas Engine EXM = 3.0L V6 Turbo Diesel Engine	DGZ = 5-Speed Auto W5A380 Transmission

Exhaust Manifolds And Heat Sheilds 3.5L [EG2]
Figure 009EG2-1005

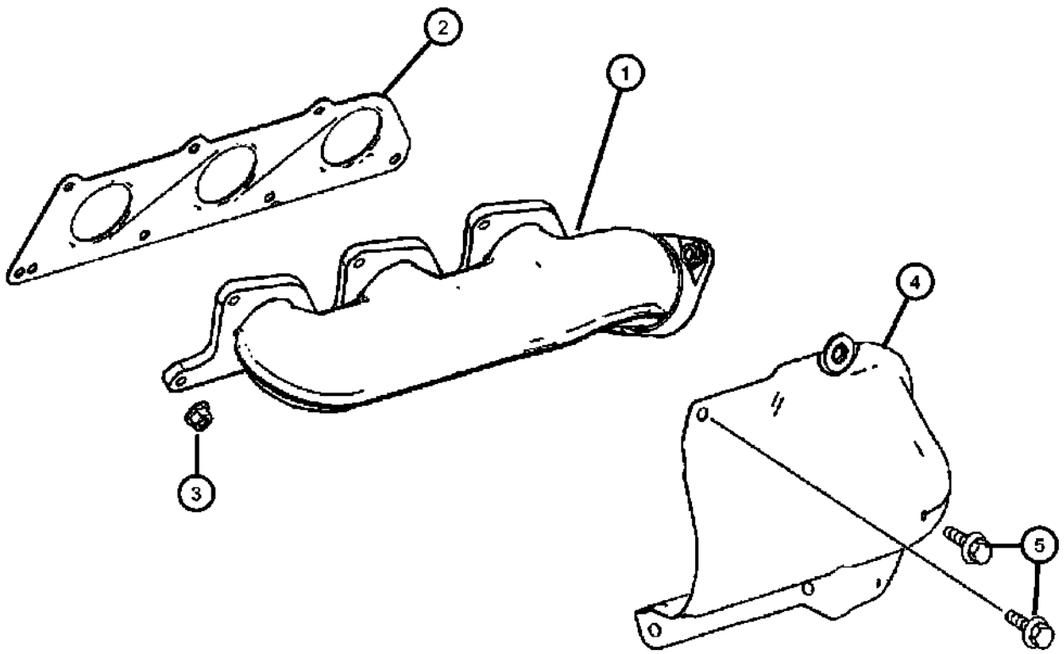

ITEM	PART NUMBER	QTY	LINE	SERIES	BODY	ENGINE	TRANS	TRIM	DESCRIPTION
NOTE: Sales Codes: [DGZ]=5 Speed Automatic Transmission [W5A380] [EG2]=3.5L V-6 Gas Engine - [Mercedes Benz]									
1									MANIFOLD, Exhaust
	68011752AA	1	2, 3, 6, 7			EG2	DGZ		Left
	68011745AA	1	2, 3, 6, 7			EG2	DGZ		Right
2	68021682AA	2	2, 3, 6, 7			EG2	DGZ		GASKET, Exhaust ManifoldRight & Left
3	06104728AA	7	2, 3, 6, 7			EG2	DGZ		NUT, Exhaust Manifold, M6x1.0
4	06104728AA	7							SHIELD, Heat, (NOT SERVICED)
5	06104005AA	6	2, 3, 6, 7			EG2	DGZ		BOLT, 6 Lobe External Head, M6X1.00X16.00

SPRINTER (VB)

SERIES	LINE	BODY	ENGINE	TRANSMISSION
L = LOWLINE	3 = HD DODGE 2WD 6 = Lt. Duty DODGE 4WD 2 = Med. Duty DODGE 2WD 7 = Med. Duty DODGE 4WD	17 = VAN WHEEL BASE 7 55 = WAGON WHEEL BASE 5 15 = VAN WHEEL BASE 5 53 = 119 WB 13 = 119 WB 05 = CAB CHASSIS WHEEL BASE 5 03 = CAB CHASSIS WHEEL BASE 3	EG2 = 3.5L V6 Gas Engine EXM = 3.0L V6 Turbo Diesel Engine	DGZ = 5-Speed Auto W5A380 Transmission

Intake Manifold 3.5L [EG2]
Figure 009EG2-1025

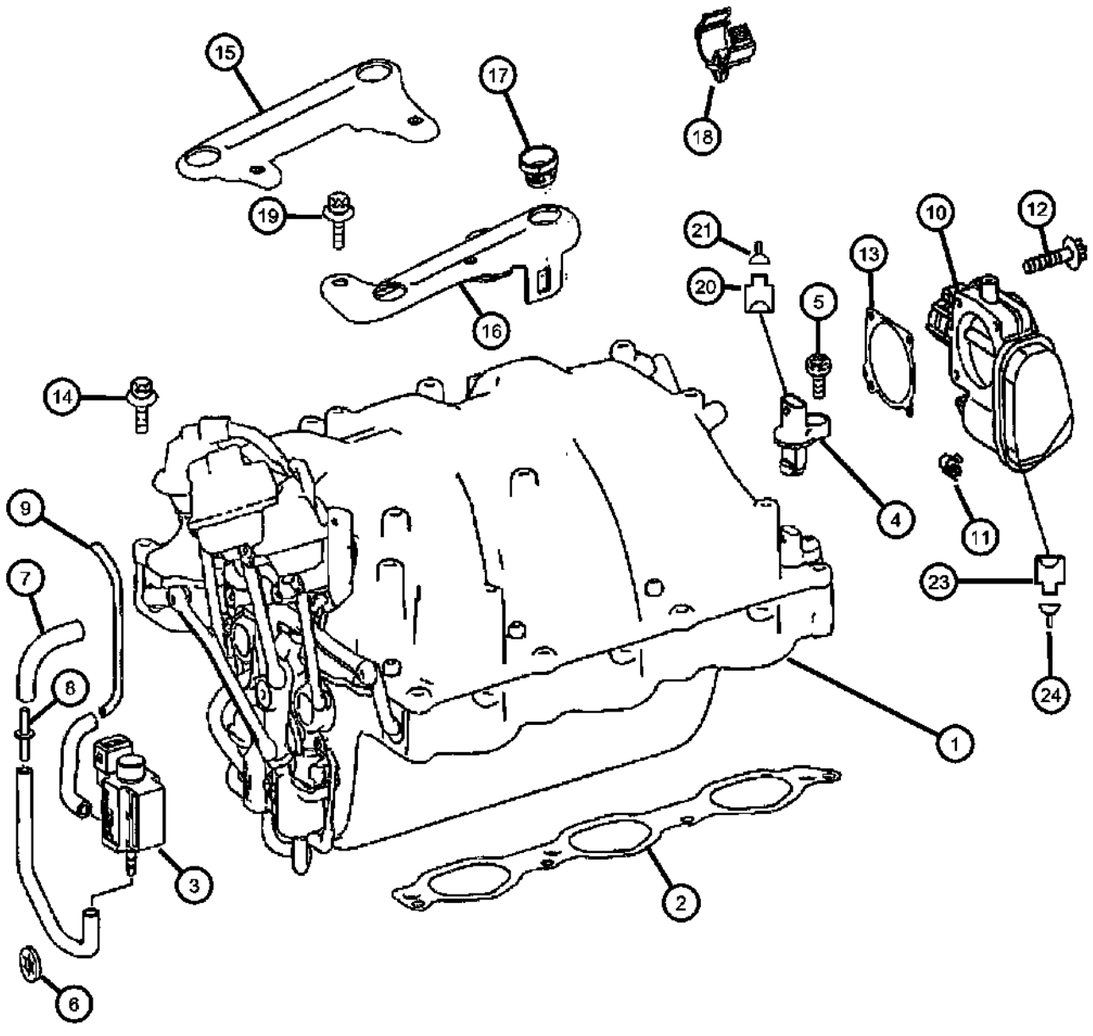

ITEM	PART NUMBER	QTY	LINE	SERIES	BODY	ENGINE	TRANS	TRIM	DESCRIPTION
NOTE:									
Sales Codes:									
[DGZ]=5 Speed Automatic Transmission [W5A380]									
[EG2]=3.5L V-6 Gas Engine - [Mercedes Benz]									
1	68011680AA	1	2, 3, 6, 7			EG2	DGZ		MANIFOLD, Intake
2	68011683AA	1	2, 3, 6, 7			EG2	DGZ		GASKET, Throttle Body
3	05099823AA	2	2, 3, 6, 7			EG2	DGZ		SOLENOID, Intake Manifold
4	68011686AA	2	2, 3, 6, 7			EG2	DGZ		SOLENOID, Intake Manifold, Intake Manifold [Tumble Flap] Switch
5	06104120AA	2	2, 3, 6, 7			EG2	DGZ		SCREW, Hex Head, M6x12, [M6x12]
6	05102929AA	11	2, 3, 6, 7			EG2	DGZ		PUSH NUT
7	05080390AA	1	2, 3, 6, 7			EG2	DGZ		HOSE, [8x3.5MM]
8	05080337AA	1	2, 3, 6, 7			EG2	DGZ		CONNECTOR, [4MM]
9	05125912AA	0	2, 3, 6, 7			EG2	DGZ		HOSE, Charge Air, [4x0.75MM]
10	05159298AA	1	2, 3, 6, 7			EG2	DGZ		THROTTLE BODY
11	05098164AA	1	2, 3, 6, 7			EG2	DGZ		BRACKET, Hose
12	68011720AA	4	2, 3, 6, 7			EG2	DGZ		SCREW, Throttle Body, [6x35]
13									GASKET
	68011721AA	1	2, 3, 6, 7			EG2	DGZ		Left, Cylinder Head
	68011723AA	1	2, 3, 6, 7			EG2	DGZ		Right, Cylinder Head
14	06104012AA	8	2, 3, 6, 7			EG2	DGZ		SCREW, Torx, M6X1.00X50
15	68011725AA	1	2, 3, 6, 7			EG2	DGZ		BRACKET
16	68011729AA	1	2, 3, 6, 7			EG2	DGZ		BRACKET
17	68005688AA	4	2, 3, 6, 7			EG2	DGZ		INSULATOR
18	68011733AA	1	2, 3, 6, 7			EG2	DGZ		INSULATOR, Wiring
19	06104675AA	4	2, 3, 6, 7			EG2	DGZ		BOLT, Pan Head, M6.0X1.00X14.00
20	68011285AA	1	2, 3, 6, 7			EG2	DGZ		CONNECTOR
21									TERMINAL
	68011877AA	AR	2, 3, 6, 7			EG2	DGZ		
	68011878AA	AR	2, 3, 6, 7			EG2, EXM	DGZ		[B28/9 B28/10]
-22	68011050AA	AR	2, 3, 6, 7			EG2	DGZ		GASKET, [B28/9 - B28/10]
23	05143912AA	1	2, 3, 6, 7			EG2, EXM	DGZ		CONNECTOR, [6 Pin M16/6]

SPRINTER (VB)

SERIES	LINE	BODY	ENGINE	TRANSMISSION
L = LOWLINE	3 = HD DODGE 2WD 6 = Lt. Duty DODGE 4WD 2 = Med. Duty DODGE 2WD 7 = Med. Duty DODGE 4WD	17 = VAN WHEEL BASE 7 55 = WAGON WHEEL BASE 5 15 = VAN WHEEL BASE 5 53 = 119 WB 13 = 119 WB 05 = CAB CHASSIS WHEEL BASE 5 03 = CAB CHASSIS WHEEL BASE 3	EG2 = 3.5L V6 Gas Engine EXM = 3.0L V6 Turbo Diesel Engine	DGZ = 5-Speed Auto W5A380 Transmission

AR = use ase required - = Non illustrrated part

<< RETURN TO GROUP INDEX

Intake Manifold 3.5L [EG2]
Figure 009EG2-1025

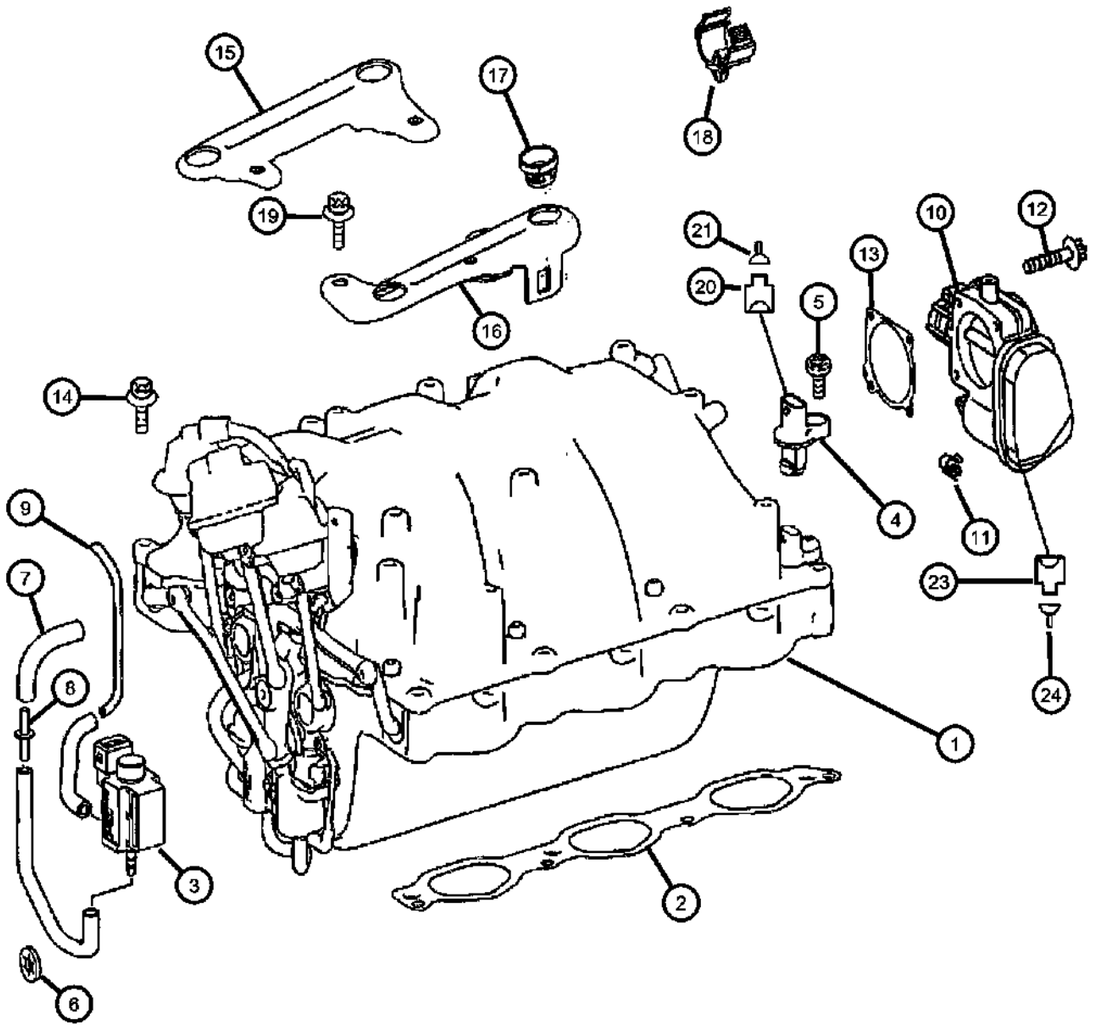

ITEM	PART NUMBER	QTY	LINE	SERIES	BODY	ENGINE	TRANS	TRIM	DESCRIPTION
24	05138911AA	AR	2, 3, 6, 7			EG2	DGZ		TERMINAL, [0.5 - 0.75 MM2; M16/6]
-25	05120859AA	99	2, 3, 6, 7			EG2	DGZ		GASKET, [0.9 - 1.3 MMS; M16/6]
-26	05135804AA	1	2, 3, 6, 7			EG2, EXM	DGZ		TUBE, Heat Shrink, Green / [0.7 - 2.4 MM2]
-27									TUBING, Heat Shrinkable
	05135854AA	1	2, 3, 6, 7			EG2, EXM	DGZ		Connector / [2.0 MM2]
	05135848AA	1	2, 3, 6, 7			EG2, EXM	DGZ		Red / [2.0 - 4.0 MM2]
	05135849AA	1	2, 3, 6, 7			EXM, EG2	DGZ		Blue / [3.5 - 8.0 MM2]
	05135850AA	1	2, 3, 6, 7			EG2, EXM	DGZ		Yellow / [7.5 - 12. MM2]
	05135851AA	1	2, 3, 6, 7			EG2, EXM	DGZ		Connector / [0.5 MM2]
	05135852AA	1	2, 3, 6, 7			EG2, EXM	DGZ		Connector / [0.8 MM2]
	05135853AA	1	2, 3, 6, 7			EG2, EXM	DGZ		Connector / [1.3 MM2]

SPRINTER (VB)

SERIES	LINE	BODY	ENGINE	TRANSMISSION
L = LOWLINE	3 = HD DODGE 2WD 6 = Lt. Duty DODGE 4WD 2 = Med. Duty DODGE 2WD 7 = Med. Duty DODGE 4WD	17 = VAN WHEEL BASE 7 55 = WAGON WHEEL BASE 5 15 = VAN WHEEL BASE 5 53 = 119 WB 13 = 119 WB 05 = CAB CHASSIS WHEEL BASE 5 03 = CAB CHASSIS WHEEL BASE 3	EG2 = 3.5L V6 Gas Engine EXM = 3.0L V6 Turbo Diesel Engine	DGZ = 5-Speed Auto W5A380 Transmission

Crankcase Ventilation 3.5L [EG2]
Figure 009EG2-1105

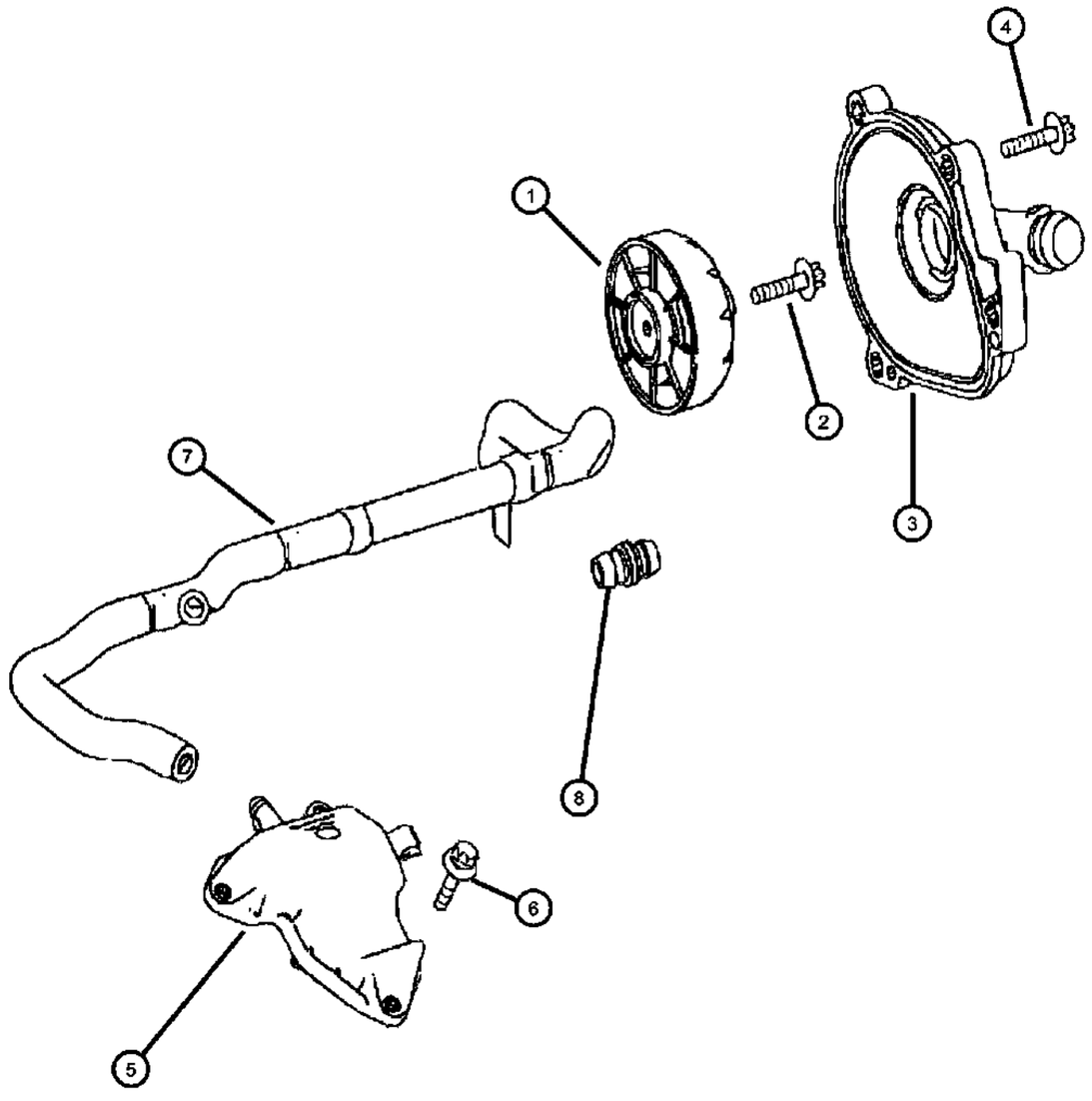

ITEM	PART NUMBER	QTY	LINE	SERIES	BODY	ENGINE	TRANS	TRIM	DESCRIPTION
NOTE: Sales Codes: [DGZ]=5 Speed Automatic Transmission [W5A380] [EG2]=3.5L V-6 Gas Engine - [Mercedes Benz]									
1	68013305AA	1	2, 3, 6, 7			EG2	DGZ		PAN, Oil
2	68013306AA	1	2, 3, 6, 7			EG2	DGZ		SCREW, [M6x30]
3	68013307AA	1	2, 3, 6, 7			EG2	DGZ		HOUSING
4	06104007AA	4	2, 3, 6, 7			EG2	DGZ		SCREW, [M6x25]
5	68013310AA	1	2, 3, 6, 7			EG2	DGZ		COVER
6	06104005AA	3	2, 3, 6, 7			EG2	DGZ		BOLT, 6 Lobe External Head, M6X1.00X16.00
7	68013299AA	1	2, 3, 6, 7			EG2	DGZ		HOSE
8	68013303AA	3	2, 3, 6, 7			EG2	DGZ		CONNECTOR

SPRINTER (VB)

SERIES	LINE	BODY	ENGINE	TRANSMISSION
L = LOWLINE	3 = HD DODGE 2WD 6 = Lt. Duty DODGE 4WD 2 = Med. Duty DODGE 2WD 7 = Med. Duty DODGE 4WD	17 = VAN WHEEL BASE 7 55 = WAGON WHEEL BASE 5 15 = VAN WHEEL BASE 5 53 = 119 WB 13 = 119 WB 05 = CAB CHASSIS WHEEL BASE 5 03 = CAB CHASSIS WHEEL BASE 3	EG2 = 3.5L V6 Gas Engine EXM = 3.0L V6 Turbo Diesel Engine	DGZ = 5-Speed Auto W5A380 Transmission

Engine Mounting Right Side RWD/2WD 3.5L [EG2]
Figure 009EG2-1230

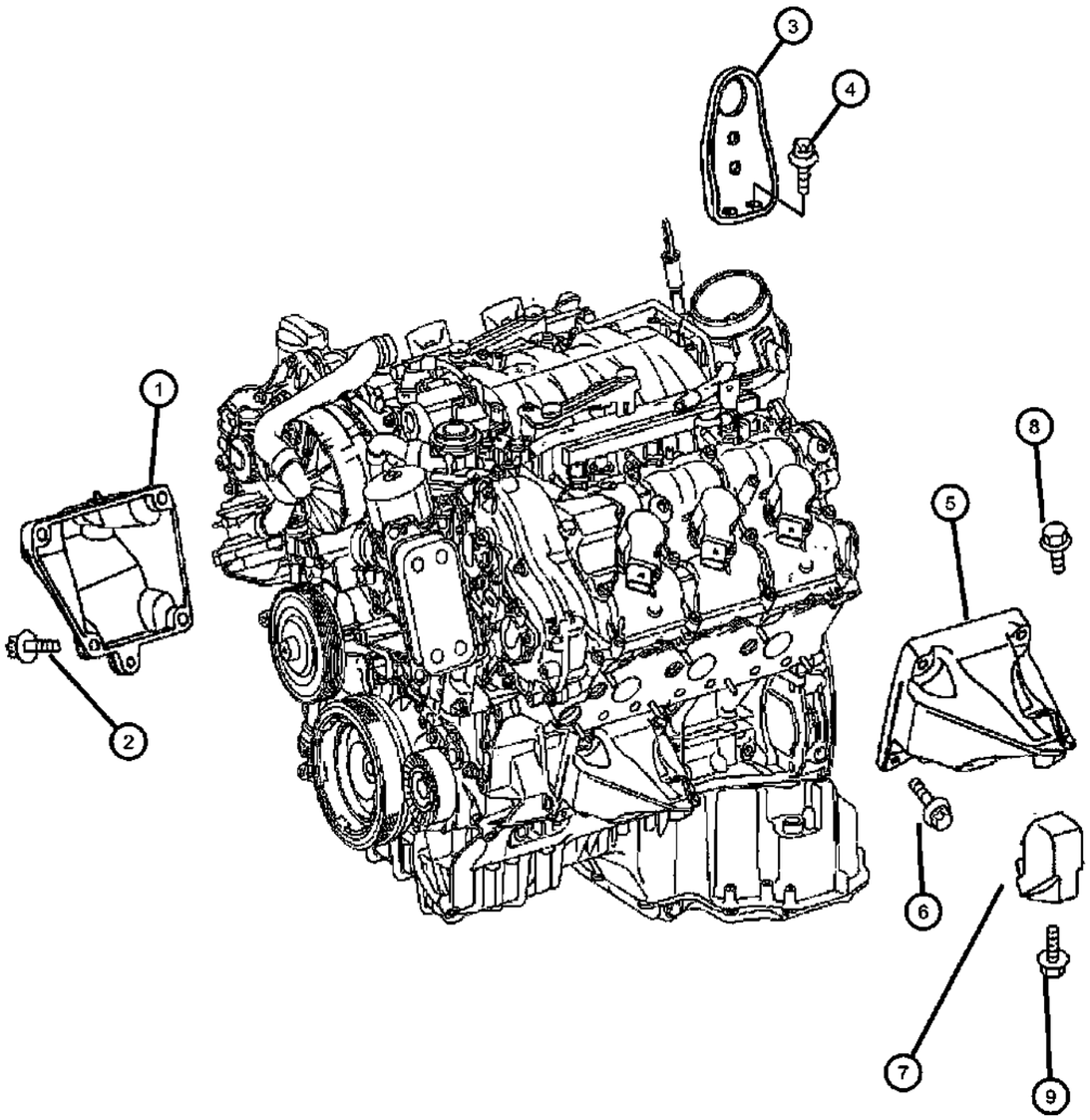

ITEM	PART NUMBER	QTY	LINE	SERIES	BODY	ENGINE	TRANS	TRIM	DESCRIPTION
NOTE:									
Sales Code:									
[DGZ]=5 Speed Automatic Transmission [W5A380]									
[EG2]=3.5L V-6 Gas Engine [Mercedes Benz]									
1	68013869AA	1	2, 3, 6, 7			EG2	DGZ		SUPPORT, EngineRight
2	05096986AA	4	2, 3, 6, 7			EG2	DGZ		BOLT
3	68013870AA	2	2, 3, 6, 7			EG2	DGZ		EYE, Tow
4	68013871AA	4	2, 3, 6, 7			EG2	DGZ		SCREW
5									SUPPORT, Engine
	68013868AA	1	2, 6			EG2	DGZ		Left
		1	3, 7			EG2	DGZ		Left
6	05096986AA	4	2, 3, 6, 7			EG2	DGZ		BOLT
7	68005194AA	2	2, 3, 6, 7			EG2	DGZ		BRACKET AND INSULATOR, Engine MountingRight & Left
8	06104041AA	2	2, 3, 6, 7			EG2, EXM	DGZ		SCREW, [M10x16], Right And Left, Lower
9	06104041AA	2							BOLT, (NOT SERVICED)
-10	06104041AA	2							SCREW, Hex Flange Head, M10x1.5x65, (NOT SERVICED)

SPRINTER (VB)

SERIES	LINE	BODY	ENGINE	TRANSMISSION
L = LOWLINE	3 = HD DODGE 2WD 6 = Lt. Duty DODGE 4WD 2 = Med. Duty DODGE 2WD 7 = Med. Duty DODGE 4WD	17 = VAN WHEEL BASE 7 55 = WAGON WHEEL BASE 5 15 = VAN WHEEL BASE 5 53 = 119 WB 13 = 119 WB 05 = CAB CHASSIS WHEEL BASE 5 03 = CAB CHASSIS WHEEL BASE 3	EG2 = 3.5L V6 Gas Engine EXM = 3.0L V6 Turbo Diesel Engine	DGZ = 5-Speed Auto W5A380 Transmission

Engine Mounting Left Side RWD/2WD 3.5L [EG2]
Figure 009EG2-1250

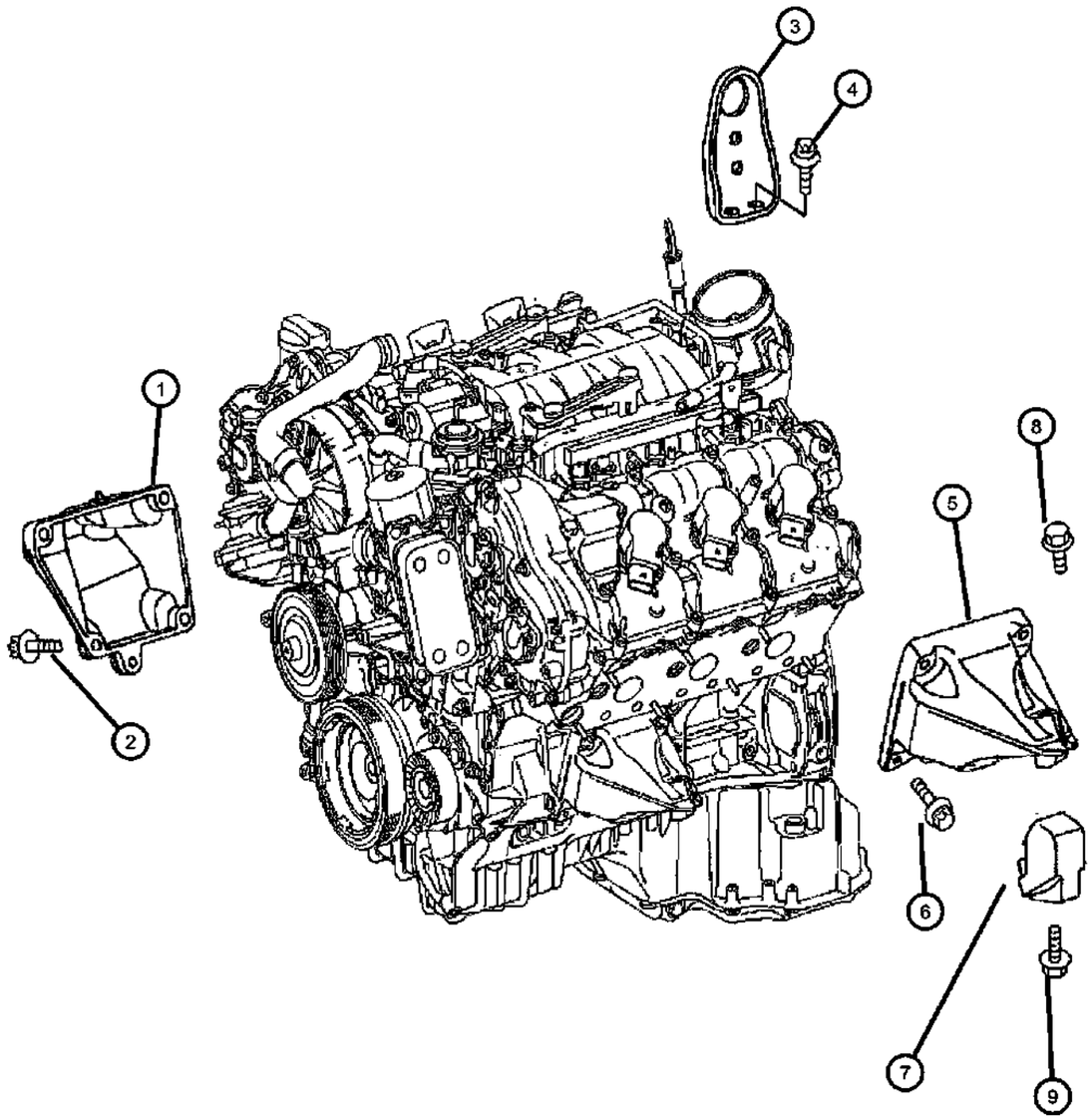

ITEM	PART NUMBER	QTY	LINE	SERIES	BODY	ENGINE	TRANS	TRIM	DESCRIPTION
NOTE:									
Sales Code:									
[DGZ]=5 Speed Automatic Transmission [W5A380]									
[EG2]=3.5L V-6 Gas Engine [Mercedes Benz]									
1	68013869AA	1	2, 3, 6, 7			EG2	DGZ		SUPPORT, EngineRight
2	05096986AA	4	2, 3, 6, 7			EG2	DGZ		BOLT
3	68013870AA	2	2, 3, 6, 7			EG2	DGZ		EYE, Tow
4	68013871AA	4	2, 3, 6, 7			EG2	DGZ		SCREW
5									SUPPORT, Engine
	68013868AA	1	2, 6			EG2	DGZ		Left
		1	3, 7			EG2	DGZ		Left
6	05096986AA	4	2, 3, 6, 7			EG2	DGZ		BOLT
7	68005194AA	2	2, 3, 6, 7			EG2	DGZ		BRACKET AND INSULATOR, Engine MountingRight & Left
8	06104041AA	2	2, 3, 6, 7			EG2, EXM	DGZ		SCREW, [M10x16], Right And Left, Lower
9	06104041AA	2							BOLT, (NOT SERVICED)
-10	06104041AA	2							SCREW, Hex Flange Head, M10x1.5x65, (NOT SERVICED)

SPRINTER (VB)

SERIES	LINE	BODY	ENGINE	TRANSMISSION
L = LOWLINE	3 = HD DODGE 2WD 6 = Lt. Duty DODGE 4WD 2 = Med. Duty DODGE 2WD 7 = Med. Duty DODGE 4WD	17 = VAN WHEEL BASE 7 55 = WAGON WHEEL BASE 5 15 = VAN WHEEL BASE 5 53 = 119 WB 13 = 119 WB 05 = CAB CHASSIS WHEEL BASE 5 03 = CAB CHASSIS WHEEL BASE 3	EG2 = 3.5L V6 Gas Engine EXM = 3.0L V6 Turbo Diesel Engine	DGZ = 5-Speed Auto W5A380 Transmission

Group - 009EXM

3.0L Turbo Diesel; Engine

009EXM-100 Engine Identification	**009EXM-1000** Manifolds and Vacuum Fittings	**009EXM-1100** Crankcase Ventilation	**009EXM-1200** Engine Mounting
009EXM-200 Cylinder Head	**009EXM-300** Cylinder Block	**009EXM-400** Crankshaft, Piston, Drive Plate, Flywheel, and Damper	**009EXM-500** Camshaft and Valve
009EXM-600 Timing Belt/Chain and Cover and Balance Shaft	**009EXM-700** Engine Oiling, Oil Pan and Indicator (Dipstick)	**009EXM-800** Engine Oil Cooler	**009EXM-900** Turbo and Super Chargers

Group - 009EXM 3.0L Turbo Diesel; Engine

Illustration Title — Group-Fig. No.

Engine Identification
Engine Assembly And Identification ..... Fig. 009EXM - 105

Cylinder Head
Cylinder Head Cover ..... Fig. 009EXM - 205
Cylinder Head ..... Fig. 009EXM - 225

Cylinder Block
Engine Cylinder Block And Hardware ..... Fig. 009EXM - 305

Crankshaft, Piston, Drive Plate, Flywheel, and Damper
Crankshaft, Crankshaft Bearings, Dampner, Flywheel And Flexplate ..... Fig. 009EXM - 405
Pistons, Piston Rings, Connecting Rods And Connecting Rod Bearings ..... Fig. 009EXM - 425
Balance Shaft ..... Fig. 009EXM - 426

Camshaft and Valve
Camshafts And Valvetrain ..... Fig. 009EXM - 505
Camshafts And Valvetrain ..... Fig. 009EXM - 506

Timing Belt/Chain and Cover and Balance Shaft
Timing Case Cover ..... Fig. 009EXM - 605
Balance Shafts ..... Fig. 009EXM - 645

Engine Oiling, Oil Pan and Indicator (Dipstick)
Engine Oiling Pump ..... Fig. 009EXM - 705
Engine Oil Pan, Engine Oil level Indicator And Related Parts ..... Fig. 009EXM - 725
Engine Oil Pan, Engine Oil level Indicator And Related Parts ..... Fig. 009EXM - 727
Engine Oil Filter, Adapter And Splash Guard ..... Fig. 009EXM - 745

Engine Oil Cooler
Engine Oil Cooler And Hoses/Tubes ..... Fig. 009EXM - 805

Turbo and Super Chargers
Turbo Charger And Oil Hoses/Tubes ..... Fig. 009EXM - 925

Manifolds and Vacuum Fittings
Exhaust Manifold And Heat Shields ..... Fig. 009EXM - 1005
Exhaust Gas Recirculation Cooler ..... Fig. 009EXM - 1010
Intake Manifold ..... Fig. 009EXM - 1025
Intake Manifold ..... Fig. 009EXM - 1045

Crankcase Ventilation
Crankcase Ventilation ..... Fig. 009EXM - 1105

Engine Mounting
Engine Mounting Right Side RWD/2WD ..... Fig. 009EXM - 1230
Engine Mounting Left Side RWD/2WD ..... Fig. 009EXM - 1250

Engine Assembly And Identification
Figure 009EXM-105

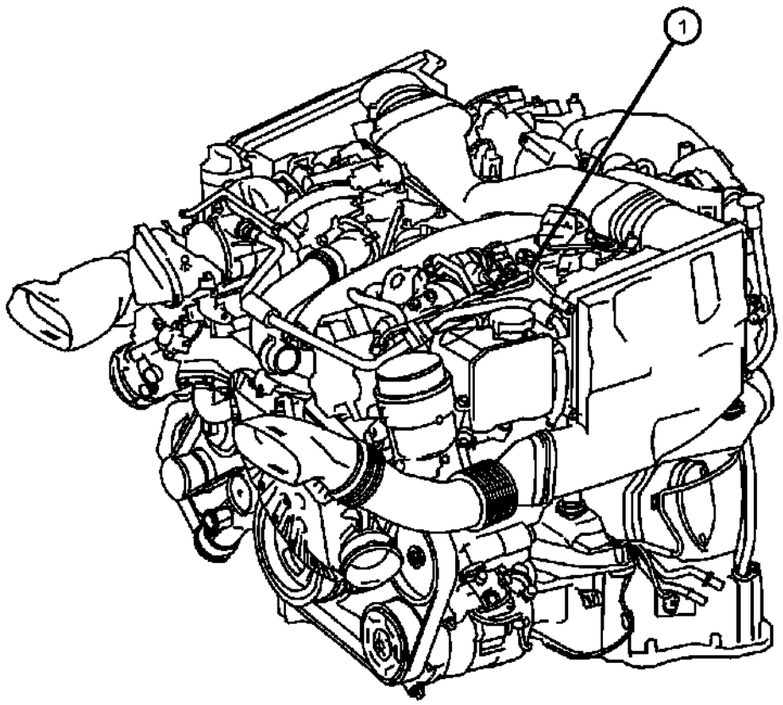

ITEM	PART NUMBER	QTY	LINE	SERIES	BODY	ENGINE	TRANS	TRIM	DESCRIPTION
NOTES:									
Sales Code									
[EXM] = 3.0L V6 Turbo Diesel Engine									
1	68006004AA	1	2, 3, 6, 7			EXM	DGZ		ENGINE, Complete

SPRINTER (VB)

SERIES	LINE	BODY	ENGINE	TRANSMISSION
L = LOWLINE	3 = HD DODGE 2WD 6 = Lt. Duty DODGE 4WD 2 = Med. Duty DODGE 2WD 7 = Med. Duty DODGE 4WD	17 = VAN WHEEL BASE 7 55 = WAGON WHEEL BASE 5 15 = VAN WHEEL BASE 5 53 = 119 WB 13 = 119 WB 05 = CAB CHASSIS WHEEL BASE 5 03 = CAB CHASSIS WHEEL BASE 3	EG2 = 3.5L V6 Gas Engine EXM = 3.0L V6 Turbo Diesel Engine	DGZ = 5-Speed Auto W5A380 Transmission

Cylinder Head Cover
Figure 009EXM-205

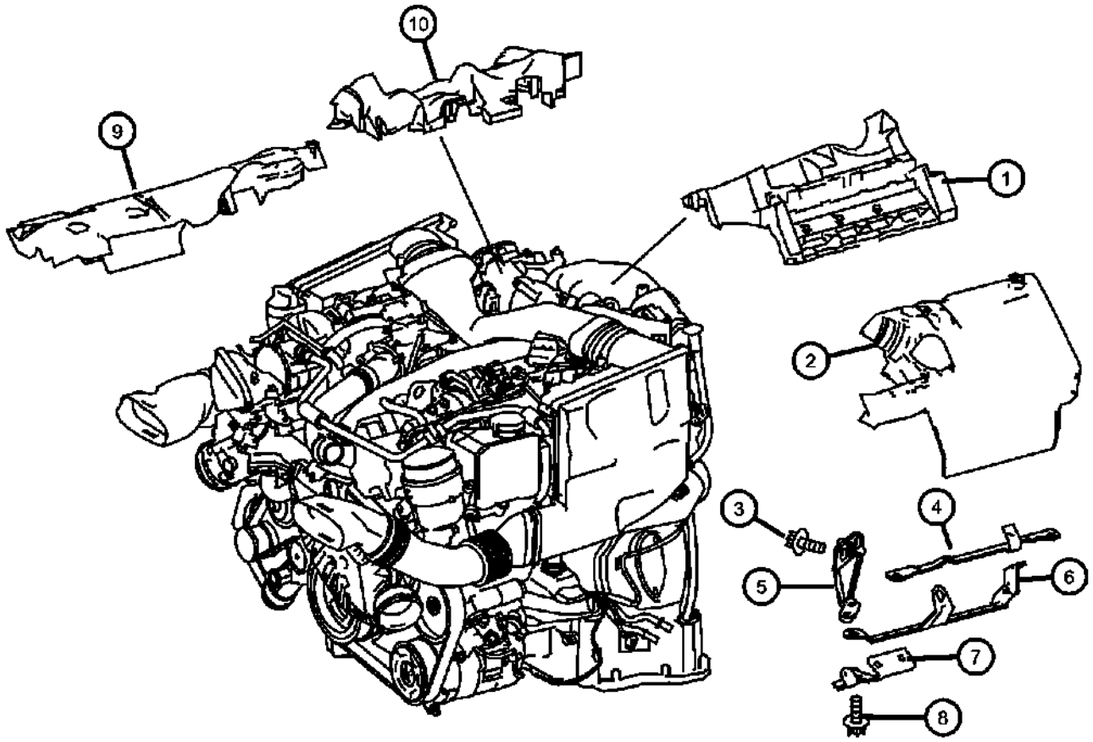

ITEM	PART NUMBER	QTY	LINE	SERIES	BODY	ENGINE	TRANS	TRIM	DESCRIPTION
NOTES:									
Sales Code									
[EXM] = 3.0L V6 Turbo Diesel Engine									
1	68012371AA	1	2, 3, 6, 7			EXM	DGZ		COVER, Left-ZJ9
2	68012372AA	1	2, 3, 6, 7			EXM	DGZ		COVER, Engine, ZJ9
3	06104006AA	2	2, 3, 6, 7			EXM	DGZ		BOLT, Torx Socket Head, M6X1.00X20.00
4	68012387AA	1	2, 3, 6, 7			EXM	DGZ		BRACKET, Engine Covering
5	68012388AA	1	2, 3, 6, 7			EXM	DGZ		BRACKET, Engine Covering
6	68012388AA	1	2, 3, 6, 7			EXM	DGZ		BRACKET, Engine Covering
7	68012390AA	1	2, 3, 6, 7			EXM	DGZ		BRACKET, Engine Covering
8	06104004AA	1	2, 3, 6, 7			EXM	DGZ		BOLT, Bracket to Cylinder Head M6x12
9	68012385AA	1	2, 3, 6, 7			EXM	DGZ		COVER, Engine
10	68012369AA	1	2, 3, 6, 7			EXM	DGZ		COVERRight

SPRINTER (VB)

SERIES	LINE	BODY	ENGINE	TRANSMISSION
L = LOWLINE	3 = HD DODGE 2WD 6 = Lt. Duty DODGE 4WD 2 = Med. Duty DODGE 2WD 7 = Med. Duty DODGE 4WD	17 = VAN WHEEL BASE 7 55 = WAGON WHEEL BASE 5 15 = VAN WHEEL BASE 5 53 = 119 WB 13 = 119 WB 05 = CAB CHASSIS WHEEL BASE 5 03 = CAB CHASSIS WHEEL BASE 3	EG2 = 3.5L V6 Gas Engine EXM = 3.0L V6 Turbo Diesel Engine	DGZ = 5-Speed Auto W5A380 Transmission

Cylinder Head
Figure 009EXM-225

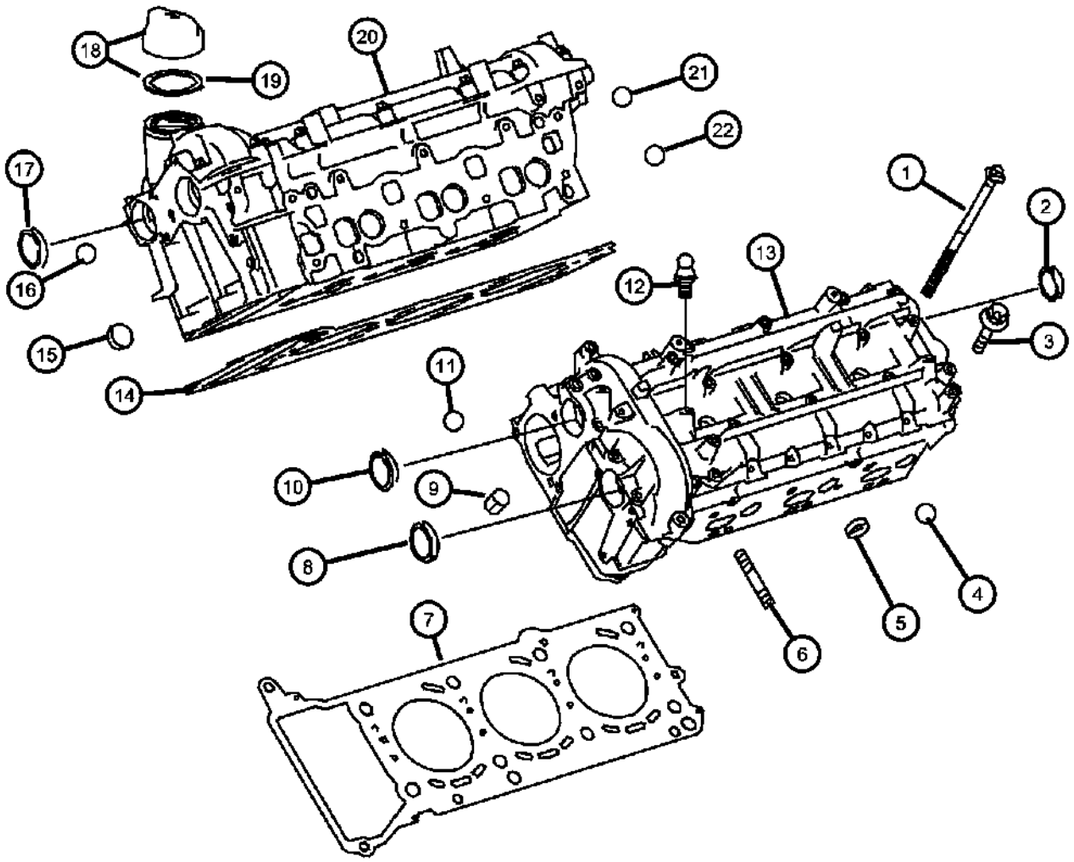

ITEM	PART NUMBER	QTY	LINE	SERIES	BODY	ENGINE	TRANS	TRIM	DESCRIPTION
NOTES:									
Sales Codes:									
[EXM] = 3.0L V6 Turbo Diesel Engine									
1									BOLT
	05175446AA	8	2, 3, 6, 7			EXM	DGZ		
	05096986AA	1	2, 3, 6, 7			EXM	DGZ		M8x35
2	05175442AA	1	2, 3, 6, 7			EXM	DGZ		PLUG, Core
3									BOLT
	06104009AA	23	2, 3, 6, 7			EXM	DGZ		Cylinder Head Cover to Cylinder M6x35, Right
		23	2, 3, 6, 7			EXM	DGZ		Cylinder Head Cover to Cylinder M6x35, Left
4	05138265AA	3	2, 3, 6, 7			EXM	DGZ		BALL, Valve Cooling Bore Outlet Lock
5	05080026AB	3	2, 3, 6, 7			EXM	DGZ		PLUG, CoreRight & Left
6	05080027AA	6	2, 3, 6, 7			EXM	DGZ		STUD, Exhaust Manifold to Cylinder Head, Right & Left
7	05175445AA	1	2, 3, 6, 7			EXM	DGZ		GASKET, Cylinder Head, LeftLeft
8	05175442AA	1	2, 3, 6, 7			EXM	DGZ		PLUG, Core, Camshaft 40 MM
9	05175383AA	4	2, 3, 6, 7			EXM	DGZ		DOWEL PIN, Timing Case to Cylinder Crankcase
10	05175442AA	1	2, 3, 6, 7			EXM	DGZ		PLUG, Core, Camshaft 40MM
11	05175442AA	1							BALL, Serviced with Cylinder Head, (NOT SERVICED)
12	05179385AA	1	2, 3, 6, 7			EXM	DGZ		PIN, Locating, Attachment,Engine Cover
13	05175342AB	1	2, 3, 6, 7			EXM	DGZ		HEAD, CylinderLeft
14	05175444AA	1	2, 3, 6, 7			EXM	DGZ		GASKET, Cylinder Head, LeftRight
15	05080026AB	3	2, 3, 6, 7			EXM	DGZ		PLUG, CoreRight & Left
16	05175317AA	6	2, 3, 6, 7			EXM	DGZ		BALL, Cap,Oil Bore
17	05175442AA	1	2, 3, 6, 7			EXM	DGZ		PLUG, Core, Camshaft 40MM
18	05175447AA	1	2, 3, 6, 7			EG2, EXM	DGZ		CAP, Oil Filler
19	05080088AA	1	2, 3, 6, 7			EXM	DGZ		SEAL, Oil Fill Cap
20	05175342AB	1	2, 3, 6, 7			EXM	DGZ		HEAD, CylinderRight
21	05175317AA	6	2, 3, 6, 7			EXM	DGZ		BALL, To Plug Oil Return Bore
22	05175317AA	6							BALL, Serviced with Cylinder Head, (NOT SERVICED)

SPRINTER (VB)

SERIES	LINE	BODY	ENGINE	TRANSMISSION
L = LOWLINE	3 = HD DODGE 2WD 6 = Lt. Duty DODGE 4WD 2 = Med. Duty DODGE 2WD 7 = Med. Duty DODGE 4WD	17 = VAN WHEEL BASE 7 55 = WAGON WHEEL BASE 5 15 = VAN WHEEL BASE 5 53 = 119 WB 13 = 119 WB 05 = CAB CHASSIS WHEEL BASE 5 03 = CAB CHASSIS WHEEL BASE 3	EG2 = 3.5L V6 Gas Engine EXM = 3.0L V6 Turbo Diesel Engine	DGZ = 5-Speed Auto W5A380 Transmission

Engine Cylinder Block And Hardware
Figure 009EXM-305

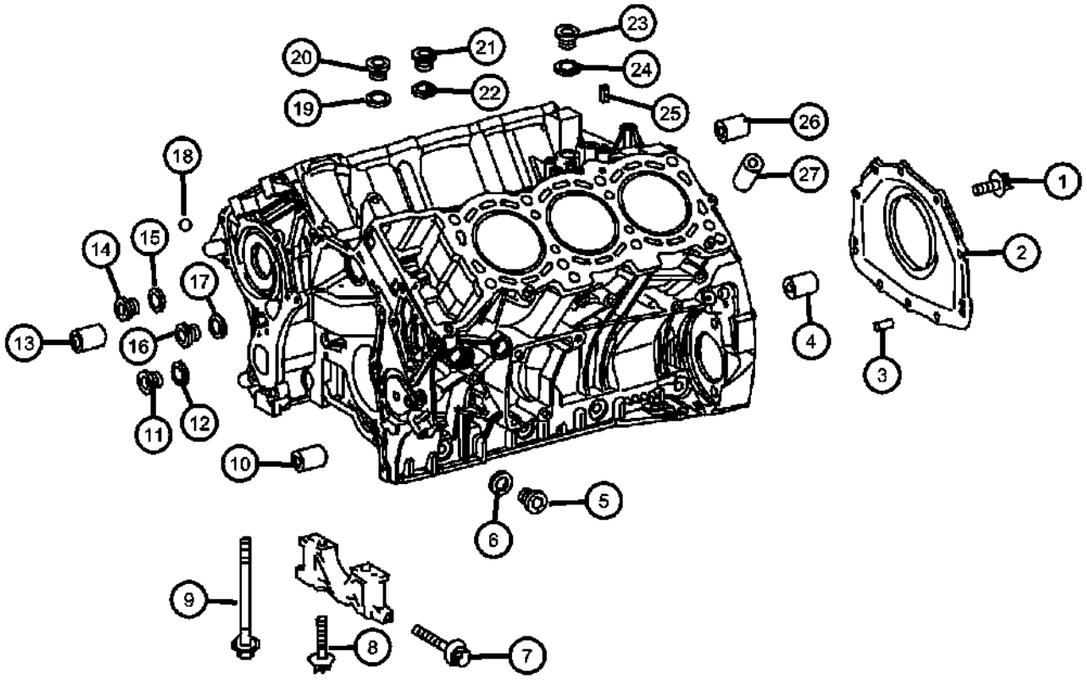

ITEM	PART NUMBER	QTY	LINE	SERIES	BODY	ENGINE	TRANS	TRIM	DESCRIPTION
NOTES:									
Sales Code:									
[EXM] = 3.0L V6 Turbo Diesel Engine									
1	06104006AA	1	2, 3, 6, 7			EXM	DGZ		BOLT, Torx Socket Head, M6X1.00X20.00
2	68006029AA	1	2, 3, 6, 7			EXM	DGZ		RETAINER AND SEAL, Crankshaft Rear Oil, Cylinder Crankcase
3	05099279AA	2	2, 3, 6, 7			EG2	DGZ		DOWEL PIN
4	05097167AA	2	2, 3, 6, 7			EG2	DGZ		DOWEL PIN
5	06104470AA	1	2, 3, 6, 7			EXM	DGZ		PLUG, Pipe, Oil Feed
6	05073866AA	1	2, 3, 6, 7			EXM	DGZ		O RING
7	06104218AA	8	2, 3, 6, 7			EXM	DGZ		BOLT, Hex Flange Head, M10x1.50x40.00
8	05175321AA	13	2, 3, 6, 7			EXM	DGZ		BOLT, Crankshaft Bearing Cap to Cylinder Crankcase
9	05175322AA	3	2, 3, 6, 7			EXM	DGZ		BOLT, Crankshaft Bearing Cap to Cylinder Crankcase
10	05073868AA	4	2, 3, 6, 7			EXM	DGZ		DOWEL PIN, Timing Case to Cylinder Crankcase
11	06104476AA	1	2, 3, 6, 7			EXM	DGZ		PLUG, Pipe, Left Water Supply
12	05133840AA	1	2, 3, 6, 7			EXM	DGZ		O RING
13	68006024AA	1	2, 3, 6, 7			EXM	DGZ		BUSHING, Crankshaft
14	06104468AA	1	2, 3, 6, 7			EXM	DGZ		PLUG, Pipe, Water Return
15	05175316AA	1	2, 3, 6, 7			EXM	DGZ		O RING
16	06104470AA	1	2, 3, 6, 7			EXM	DGZ		PLUG, Pipe, Differental Shaft
17	05073866AA	1	2, 3, 6, 7			EXM	DGZ		O RING
18	05175317AA	6	2, 3, 6, 7			EXM	DGZ		BALL, Oil Return Vacuum Pump
19	05133840AA	1	2, 3, 6, 7			EXM	DGZ		O RING
20	06104476AA	1	2, 3, 6, 7			EXM	DGZ		PLUG, Pipe
21	06104472AA	2	2, 3, 6, 7			EXM	DGZ		PLUG, Pipe, Differental Shaft
22	05175309AA	2	2, 3, 6, 7			EXM	DGZ		O RING
23	06104464AA	1	2, 3, 6, 7			EXM	DGZ		PLUG, Pipe, Feed
24	05175317AA	6	2, 3, 6, 7			EXM	DGZ		BALL, Oil Return Vacuum Pump
25	05083930AA	2	2, 3, 6, 7			EXM	DGZ		DOWEL PIN, Turbocharger to Crankcase

SPRINTER (VB)

SERIES	LINE	BODY	ENGINE	TRANSMISSION
L = LOWLINE	3 = HD DODGE 2WD 6 = Lt. Duty DODGE 4WD 2 = Med. Duty DODGE 2WD 7 = Med. Duty DODGE 4WD	17 = VAN WHEEL BASE 7 55 = WAGON WHEEL BASE 5 15 = VAN WHEEL BASE 5 53 = 119 WB 13 = 119 WB 05 = CAB CHASSIS WHEEL BASE 5 03 = CAB CHASSIS WHEEL BASE 3	EG2 = 3.5L V6 Gas Engine EXM = 3.0L V6 Turbo Diesel Engine	DGZ = 5-Speed Auto W5A380 Transmission

Engine Cylinder Block And Hardware
Figure 009EXM-305

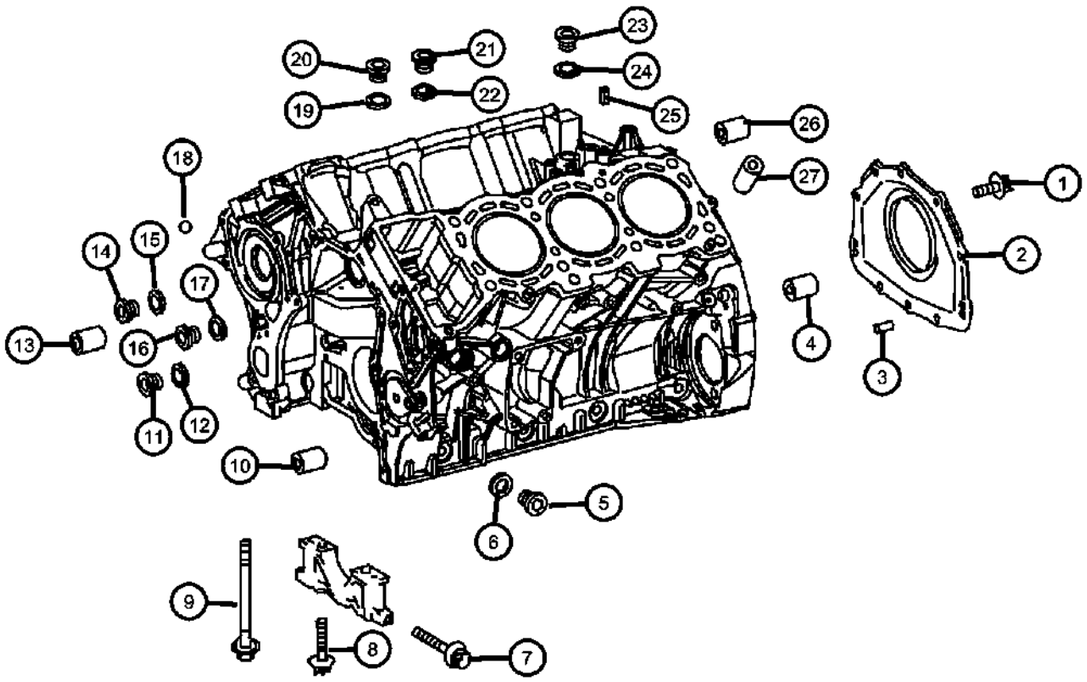

ITEM	PART NUMBER	QTY	LINE	SERIES	BODY	ENGINE	TRANS	TRIM	DESCRIPTION
26	05175323AA	1	2, 3, 6, 7			EXM	DGZ		BUSHING, Crankshaft, Differental Shaft to Crankcase
27	05073868AA	4	2, 3, 6, 7			EXM	DGZ		DOWEL PIN, Cylinder Head to Cylinder Crankcase

SPRINTER (VB)

SERIES	LINE	BODY	ENGINE	TRANSMISSION
L = LOWLINE	3 = HD DODGE 2WD 6 = Lt. Duty DODGE 4WD 2 = Med. Duty DODGE 2WD 7 = Med. Duty DODGE 4WD	17 = VAN WHEEL BASE 7 55 = WAGON WHEEL BASE 5 15 = VAN WHEEL BASE 5 53 = 119 WB 13 = 119 WB 05 = CAB CHASSIS WHEEL BASE 5 03 = CAB CHASSIS WHEEL BASE 3	EG2 = 3.5L V6 Gas Engine EXM = 3.0L V6 Turbo Diesel Engine	DGZ = 5-Speed Auto W5A380 Transmission

Crankshaft, Crankshaft Bearings, Dampner, Flywheel And Flexplate
Figure 009EXM-405

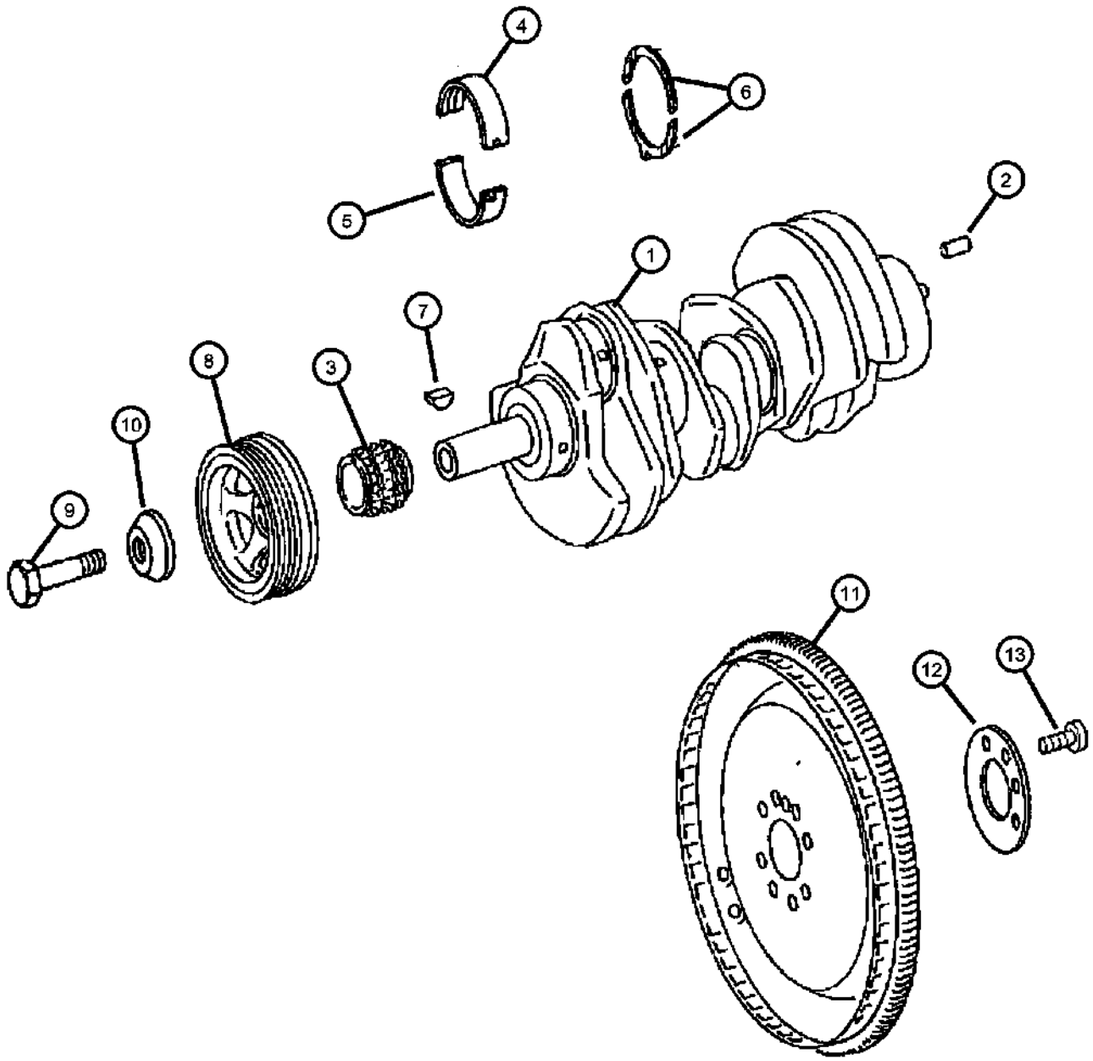

ITEM	PART NUMBER	QTY	LINE	SERIES	BODY	ENGINE	TRANS	TRIM	DESCRIPTION
NOTE:Bearings Only Serviced By Color, Standard Size Only. Over Size Bearings Are Not Serviced. Please Refer To Service Manual For Additiona Sales Code [EXM] = 3.0L V6 Turbo Diesel									
1	05179462AA	1	2, 3, 6, 7			EXM	DGZ		CRANKSHAFT AND KEY
2	05080024AA	1	2, 3, 6, 7			EXM	DGZ		DOWEL PIN
3	05175345AA	1	2, 3, 6, 7			EXM	DGZ		GEAR, Crankshaft
4									BEARING, Crankshaft
	05179441AA	4	2, 3, 6, 7			EXM	DGZ		Bearing Color [Blue], Upper, Crank Shaft, Bearing
	05179442AA	4	2, 3, 6, 7			EXM	DGZ		Bearing Color [Yellow], Upper, Crank Shaft, Bearing
	05179443AA	4	2, 3, 6, 7			EXM	DGZ		Bearing Color [Red], Upper, Crank Shaft, Bearing
5									BEARING, Crankshaft
	05179444AA	4	2, 3, 6, 7			EXM	DGZ		Bearing Color [Blue], Lower, Crankshaft, Bearing
	05179445AA	4	2, 3, 6, 7			EXM	DGZ		Bearing Color [Yellow], Lower, Crankshaft, Bearing
	05179446AA	4	2, 3, 6, 7			EXM	DGZ		Bearing Color [Red], Lower, Crankshaft, Bearing
6									THRUST BEARING
	05175357AA	2	2, 3, 6, 7			EXM	DGZ		Standard Size [2.15MM]
	05175358AA	2	2, 3, 6, 7			EXM	DGZ		Standard Size [2.20MM]
7	05101484AB	1	2, 3, 6, 7			EXM	DGZ		KEY, Woodruff
8	68013978AA	1	2, 3, 6, 7			EXM	DGZ		DAMPER, Crankshaft
9	06104301AA	1	2, 3, 6, 7			EXM	DGZ		BOLT, Hex Flange Head, M18x1.50x80.00
10	05080005AA	1	2, 3, 6, 7			EXM	DGZ		WASHER
11	05175957AA	1	2, 3, 6, 7			EXM	DGZ		FLEX PLATE
12	05139838AA	1	2, 3, 6, 7			EXM	DGZ		PLATE, Flexplate Backing
13	05073700AB	8	2, 3, 6, 7			EXM	DGZ		SCREW

SPRINTER (VB)

SERIES	LINE	BODY	ENGINE	TRANSMISSION
L = LOWLINE	3 = HD DODGE 2WD 6 = Lt. Duty DODGE 4WD 2 = Med. Duty DODGE 2WD 7 = Med. Duty DODGE 4WD	17 = VAN WHEEL BASE 7 55 = WAGON WHEEL BASE 5 15 = VAN WHEEL BASE 5 53 = 119 WB 13 = 119 WB 05 = CAB CHASSIS WHEEL BASE 5 03 = CAB CHASSIS WHEEL BASE 3	EG2 = 3.5L V6 Gas Engine EXM = 3.0L V6 Turbo Diesel Engine	DGZ = 5-Speed Auto W5A380 Transmission

Pistons, Piston Rings, Connecting Rods And Connecting Rod Bearings
Figure 009EXM-425

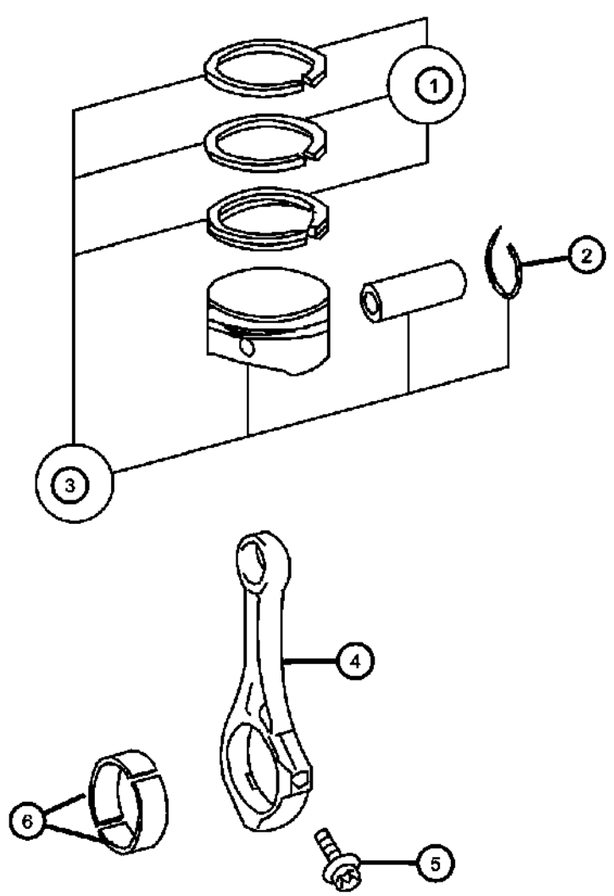

ITEM	PART NUMBER	QTY	LINE	SERIES	BODY	ENGINE	TRANS	TRIM	DESCRIPTION
NOTES:									
Sales Code									
[EXM] = 3.0L V6 Turbo Diesel Engine									
1	05175364AA	3	2, 3, 6, 7			EXM	DGZ		RING, Piston, Parts Kit
2									RING KIT, Piston
	05080034AA	6	2, 3, 6, 7			EXM	DGZ		Din 73130-C30x2.0, Right
		6	2, 3, 6, 7			EXM	DGZ		Din 73130-C30x2.0, Left
3	68013987AA	3	2, 3, 6, 7			EXM	DGZ		PISTON & PIN ASSY, StandardRight
4	68013979AA	6	2, 3, 6, 7			EXM	DGZ		ROD, Connecting
5	05179418AA	12	2, 3, 6, 7			EXM	DGZ		BOLT, Connecting Rod
6	05175363AB	6	2, 3, 6, 7			EXM	DGZ		BEARING, Connecting Rod, STD., Parts Kit

SPRINTER (VB)

SERIES	LINE	BODY	ENGINE	TRANSMISSION
L = LOWLINE	3 = HD DODGE 2WD 6 = Lt. Duty DODGE 4WD 2 = Med. Duty DODGE 2WD 7 = Med. Duty DODGE 4WD	17 = VAN WHEEL BASE 7 55 = WAGON WHEEL BASE 5 15 = VAN WHEEL BASE 5 53 = 119 WB 13 = 119 WB 05 = CAB CHASSIS WHEEL BASE 5 03 = CAB CHASSIS WHEEL BASE 3	EG2 = 3.5L V6 Gas Engine EXM = 3.0L V6 Turbo Diesel Engine	DGZ = 5-Speed Auto W5A380 Transmission

Balance Shaft
Figure 009EXM-426

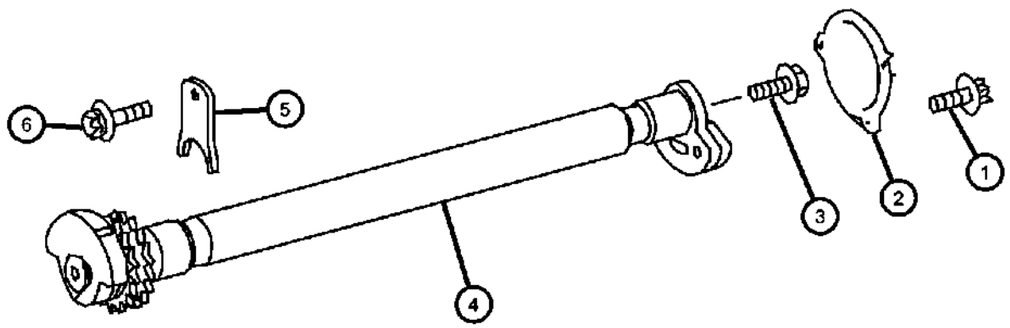

ITEM	PART NUMBER	QTY	LINE	SERIES	BODY	ENGINE	TRANS	TRIM	DESCRIPTION

NOTES:
Sales Code
[EXM] = 3.0L V6 Turbo Diesel Engine

1	06104004AA	3	2, 3, 6, 7			EXM	DGZ		BOLT, Cover Attachment M6x12
2	05175362AB	1	2, 3, 6, 7			EXM	DGZ		COVER, Balance Shaft
3	05102898AA	1	2, 3, 6, 7			EXM	DGZ		BOLT, M8x50x10.9
4	05175346AA	1	2, 3, 6, 7			EXM	DGZ		SHAFT, Balance
5	05175360AA	1	2, 3, 6, 7			EXM	DGZ		WASHER
6	06104005AA	1	2, 3, 6, 7			EXM	DGZ		BOLT, 6 Lobe External Head, M6X1.00X16.00

SPRINTER (VB)

SERIES	LINE	BODY	ENGINE	TRANSMISSION
L = LOWLINE	3 = HD DODGE 2WD 6 = Lt. Duty DODGE 4WD 2 = Med. Duty DODGE 2WD 7 = Med. Duty DODGE 4WD	17 = VAN WHEEL BASE 7 55 = WAGON WHEEL BASE 5 15 = VAN WHEEL BASE 5 53 = 119 WB 13 = 119 WB 05 = CAB CHASSIS WHEEL BASE 5 03 = CAB CHASSIS WHEEL BASE 3	EG2 = 3.5L V6 Gas Engine EXM = 3.0L V6 Turbo Diesel Engine	DGZ = 5-Speed Auto W5A380 Transmission

Camshafts And Valvetrain
Figure 009EXM-505

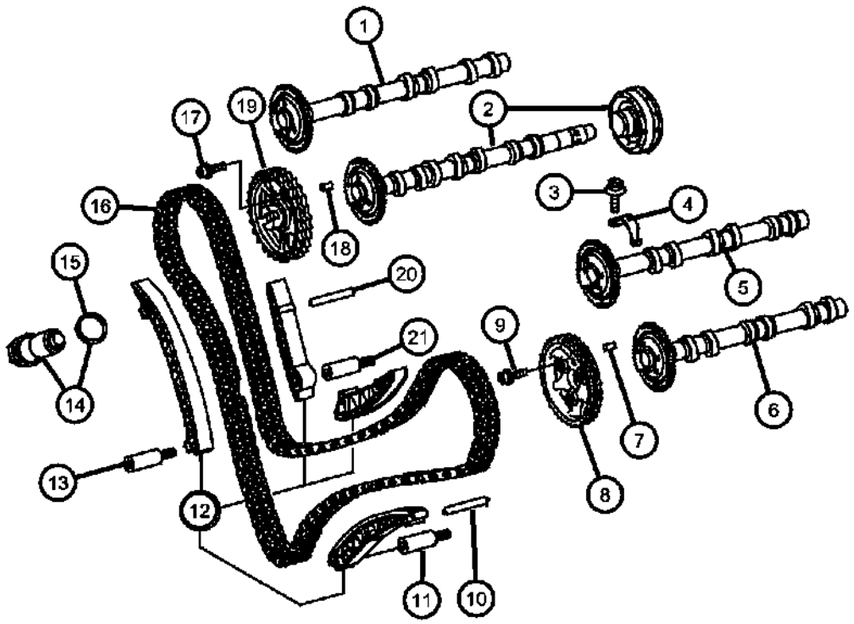

ITEM	PART NUMBER	QTY	LINE	SERIES	BODY	ENGINE	TRANS	TRIM	DESCRIPTION
NOTES:									
Sales Code									
[EXM] = 3.0L V6 Turbo Diesel Engine									
1	68017930AA	1	2, 3, 6, 7			EXM	DGZ		CAMSHAFT, ExhaustRight
2	05175451AA	1	2, 3, 6, 7			EXM			CAMSHAFT, IntakeRight
3	06104075AA	8	2, 3, 6, 7			EXM	DGZ		BOLT, Bracket Mounting M6x12
4	05175448AA	4	2, 3, 6, 7			EXM	DGZ		CAP, Camshaft Bearing
5	05175452AA	1	2, 3, 6, 7			EXM			CAMSHAFT, IntakeLeft
6	05175454AA	1	2, 3, 6, 7			EXM	DGZ		CAMSHAFT, ExhaustLeft
7	68032668AA	1	2, 3, 6, 7			EXM	DGZ		PIN, Dowel
8	05175458AA	1	2, 3, 6, 7			EXM	DGZ		GEAR, Camshaft, Exhaust, Left
9	05073901AA	6	2, 3, 6, 7			EXM	DGZ		BOLT
10	05175460AA	3	2, 3, 6, 7			EXM	DGZ		DOWEL PIN, Sliding Rail to Cylinder Crankcase
11	05175459AA	3	2, 3, 6, 7			EXM	DGZ		DOWEL PIN, Guide Rail to Crankcase Right
12	05175511AA	1	2, 3, 6, 7			EXM	DGZ		GUIDE, Timing Chain, Repair Kit
13	05175459AA	3	2, 3, 6, 7			EXM	DGZ		DOWEL PIN, Sliding Rail to Cylinder Crankcase
14	68017937AA	1	2, 3, 6, 7			EXM	DGZ		TENSIONER, Chain
15	05125905AA	1	2, 3, 6, 7			EXM	DGZ		O RING
16	05175510AA	1	2, 3, 6, 7			EXM	DGZ		CHAIN, Timing
17	05073901AA	6	2, 3, 6, 7			EXM	DGZ		BOLT
18	68032668AA	1	2, 3, 6, 7			EXM	DGZ		PIN, Dowel
19	05080110AA	1	2, 3, 6, 7			EXM	DGZ		GEAR, Camshaft, Inlet, Right
20	05175460AA	3	2, 3, 6, 7			EXM	DGZ		DOWEL PIN, Sliding Rail to Cylinder Crankcase
21	05175459AA	3	2, 3, 6, 7			EXM	DGZ		DOWEL PIN, Guide Rail to Crankcase Right

SPRINTER (VB)

SERIES	LINE	BODY	ENGINE	TRANSMISSION
L = LOWLINE	3 = HD DODGE 2WD 6 = Lt. Duty DODGE 4WD 2 = Med. Duty DODGE 2WD 7 = Med. Duty DODGE 4WD	17 = VAN WHEEL BASE 7 55 = WAGON WHEEL BASE 5 15 = VAN WHEEL BASE 5 53 = 119 WB 13 = 119 WB 05 = CAB CHASSIS WHEEL BASE 5 03 = CAB CHASSIS WHEEL BASE 3	EG2 = 3.5L V6 Gas Engine EXM = 3.0L V6 Turbo Diesel Engine	DGZ = 5-Speed Auto W5A380 Transmission

Camshafts And Valvetrain
Figure 009EXM-506

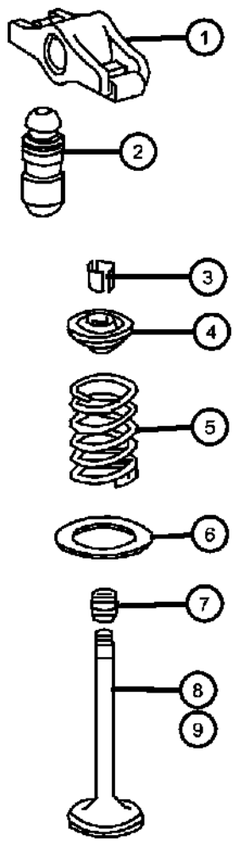

ITEM	PART NUMBER	QTY	LINE	SERIES	BODY	ENGINE	TRANS	TRIM	DESCRIPTION
NOTES:									
Sales Code									
[EXM] = 3.0L V6 Turbo Diesel Engine									
1	05175441AA	24	2, 3, 6, 7			EXM	DGZ		ROCKER ARM, Inlet and Exhaust ValveRight & Left
2	05175440AA	24	2, 3, 6, 7			EXM	DGZ		ADJUSTER, Valve Lash
3	05175399AA	24	2, 3, 6, 7			EXM	DGZ		LOCK, Valve Spring Retainer
4	05175400AA	24	2, 3, 6, 7			EXM	DGZ		RETAINER, Valve SpringTop
5	05175398AA	6	2, 3, 6, 7			EXM	DGZ		SPRING, Valve, Intake, Right & Left
6	05175401AA	24	2, 3, 6, 7			EXM	DGZ		RETAINER, Valve Spring, Bottom
7	05175438AA	6	2, 3, 6, 7			EXM	DGZ		SEAL, Valve Guide
8	05175396AA	6	2, 3, 6, 7			EXM	DGZ		VALVE, Intake, StandardRight & Left
9	05175397AA	6	2, 3, 6, 7			EXM	DGZ		VALVE, Exhaust, StandardRight & Left

SPRINTER (VB)

SERIES	LINE	BODY	ENGINE	TRANSMISSION
L = LOWLINE	3 = HD DODGE 2WD 6 = Lt. Duty DODGE 4WD 2 = Med. Duty DODGE 2WD 7 = Med. Duty DODGE 4WD	17 = VAN WHEEL BASE 7 55 = WAGON WHEEL BASE 5 15 = VAN WHEEL BASE 5 53 = 119 WB 13 = 119 WB 05 = CAB CHASSIS WHEEL BASE 5 03 = CAB CHASSIS WHEEL BASE 3	EG2 = 3.5L V6 Gas Engine EXM = 3.0L V6 Turbo Diesel Engine	DGZ = 5-Speed Auto W5A380 Transmission

Timing Case Cover
Figure 009EXM-605

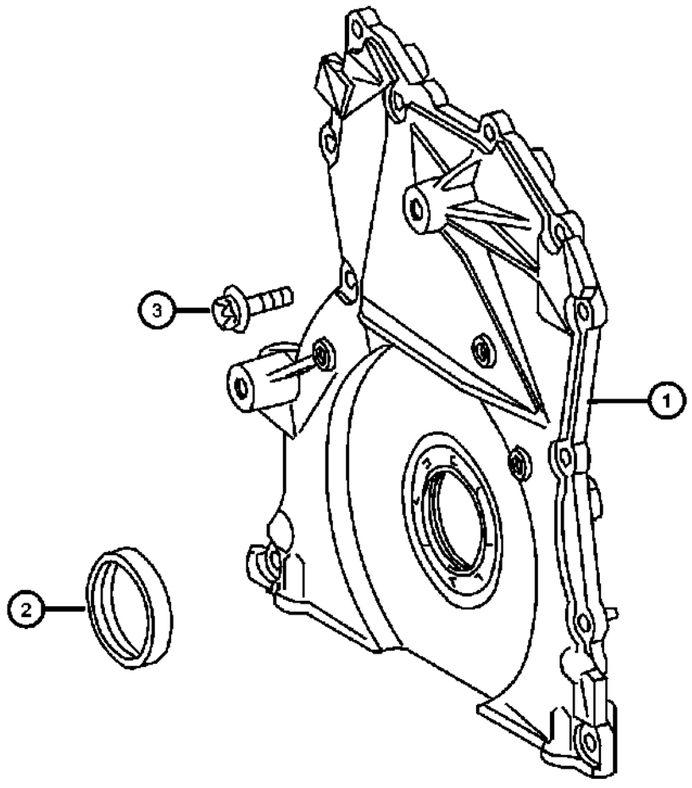

ITEM	PART NUMBER	QTY	LINE	SERIES	BODY	ENGINE	TRANS	TRIM	DESCRIPTION
NOTES:									
Sales Code									
[EXM] =3.0L V6 Turbo Diesel Engine									
1	05175337AA	1	2, 3, 6, 7			EXM	DGZ		COVER, Timing Case
2	05073675AB	1	2, 3, 6, 7			EXM	DGZ		SEAL, Crankshaft Oil, Front
3	05175338AA	12	2, 3, 6, 7			EXM	DGZ		BOLT, M6x20 MK

SPRINTER (VB)

SERIES	LINE	BODY	ENGINE	TRANSMISSION
L = LOWLINE	3 = HD DODGE 2WD 6 = Lt. Duty DODGE 4WD 2 = Med. Duty DODGE 2WD 7 = Med. Duty DODGE 4WD	17 = VAN WHEEL BASE 7 55 = WAGON WHEEL BASE 5 15 = VAN WHEEL BASE 5 53 = 119 WB 13 = 119 WB 05 = CAB CHASSIS WHEEL BASE 5 03 = CAB CHASSIS WHEEL BASE 3	EG2 = 3.5L V6 Gas Engine EXM = 3.0L V6 Turbo Diesel Engine	DGZ = 5-Speed Auto W5A380 Transmission

Balance Shafts
Figure 009EXM-645

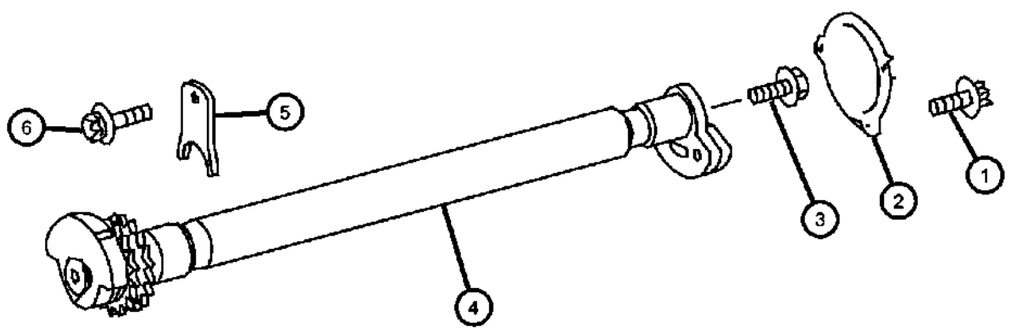

ITEM	PART NUMBER	QTY	LINE	SERIES	BODY	ENGINE	TRANS	TRIM	DESCRIPTION

NOTES:
Sales Code
[EXM] = 3.0L V6 Turbo Diesel Engine

1	06104004AA	3	2, 3, 6, 7			EXM	DGZ		BOLT, Cover Attachment M6x12
2	05175362AB	1	2, 3, 6, 7			EXM	DGZ		COVER, Balance Shaft
3	05102898AA	1	2, 3, 6, 7			EXM	DGZ		BOLT, M8x50x10.9
4	05175346AA	1	2, 3, 6, 7			EXM	DGZ		SHAFT, Balance
5	05175360AA	1	2, 3, 6, 7			EXM	DGZ		WASHER
6	06104005AA	1	2, 3, 6, 7			EXM	DGZ		BOLT, 6 Lobe External Head, M6X1.00X16.00

SPRINTER (VB)

SERIES	LINE	BODY	ENGINE	TRANSMISSION
L = LOWLINE	3 = HD DODGE 2WD 6 = Lt. Duty DODGE 4WD 2 = Med. Duty DODGE 2WD 7 = Med. Duty DODGE 4WD	17 = VAN WHEEL BASE 7 55 = WAGON WHEEL BASE 5 15 = VAN WHEEL BASE 5 53 = 119 WB 13 = 119 WB 05 = CAB CHASSIS WHEEL BASE 5 03 = CAB CHASSIS WHEEL BASE 3	EG2 = 3.5L V6 Gas Engine EXM = 3.0L V6 Turbo Diesel Engine	DGZ = 5-Speed Auto W5A380 Transmission

Engine Oiling Pump
Figure 009EXM-705

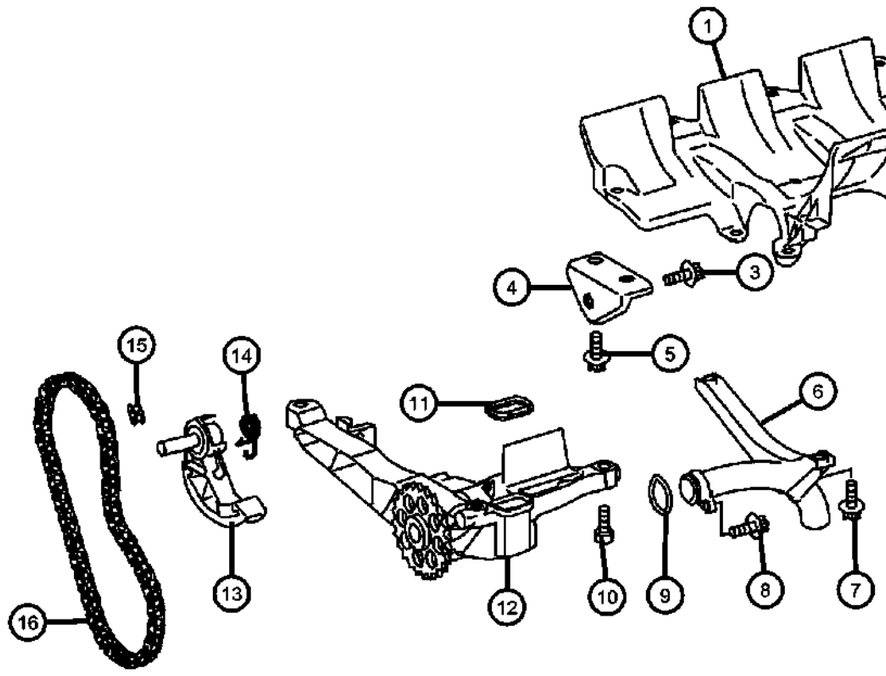

ITEM	PART NUMBER	QTY	LINE	SERIES	BODY	ENGINE	TRANS	TRIM	DESCRIPTION

NOTES:
Sales Code
[EXM] = 3.0L V6 Turbo Diesel Engine

1	68017821AA	1	2, 3, 6, 7			EXM	DGZ		SLINGER, Oil
2	06104682AA	7	2, 3, 6, 7			EXM	DGZ		BOLT, M6x19
3	06104004AA	2	2, 3, 6, 7			EXM	DGZ		BOLT, Bracket to Oil Pump M6x12
4	05175528AA	1	2, 3, 6, 7			EXM	DGZ		BRACKET, At Oil Pump
5	06104682AA	1	2, 3, 6, 7			EXM	DGZ		BOLT, Bracket to Oil Pump M6x19
6	68014037AA	1	2, 3, 6, 7			EXM	DGZ		TUBE, Oil Pickup
7	06104682AA	2	2, 3, 6, 7			EXM	DGZ		BOLT, Intake Manifold to Cylinder Crankcase M6x19
8	06104682AA	1	2, 3, 6, 7			EXM	DGZ		BOLT, Suction Pipe to Oil Pump M6x19
9	05175523AA	1	2, 3, 6, 7			EXM	DGZ		O RING
10	05175526AA	3	2, 3, 6, 7			EXM	DGZ		BOLT, Oil Pump on Crankcase
11	05175527AA	1	2, 3, 6, 7			EXM	DGZ		GASKET, Oil Pump
12	05179493AA	1	2, 3, 6, 7			EXM	DGZ		PUMP, Engine Oil
13	05175524AA	1	2, 3, 6, 7			EXM	DGZ		GUIDE, Timing Chain, Suction Basket to Oil Pump Housing
14	05175525AA	1	2, 3, 6, 7			EXM	DGZ		TENSIONER, Chain
15	05080129AA	1	2, 3, 6, 7			EXM	DGZ		LINK, Chain
16	05080128AA	1	2, 3, 6, 7			EXM	DGZ		CHAIN, Oil Pump Drive

SPRINTER (VB)

SERIES	LINE	BODY	ENGINE	TRANSMISSION
L = LOWLINE	3 = HD DODGE 2WD 6 = Lt. Duty DODGE 4WD 2 = Med. Duty DODGE 2WD 7 = Med. Duty DODGE 4WD	17 = VAN WHEEL BASE 7 55 = WAGON WHEEL BASE 5 15 = VAN WHEEL BASE 5 53 = 119 WB 13 = 119 WB 05 = CAB CHASSIS WHEEL BASE 5 03 = CAB CHASSIS WHEEL BASE 3	EG2 = 3.5L V6 Gas Engine EXM = 3.0L V6 Turbo Diesel Engine	DGZ = 5-Speed Auto W5A380 Transmission

Engine Oil Pan, Engine Oil level Indicator And Related Parts
Figure 009EXM-725

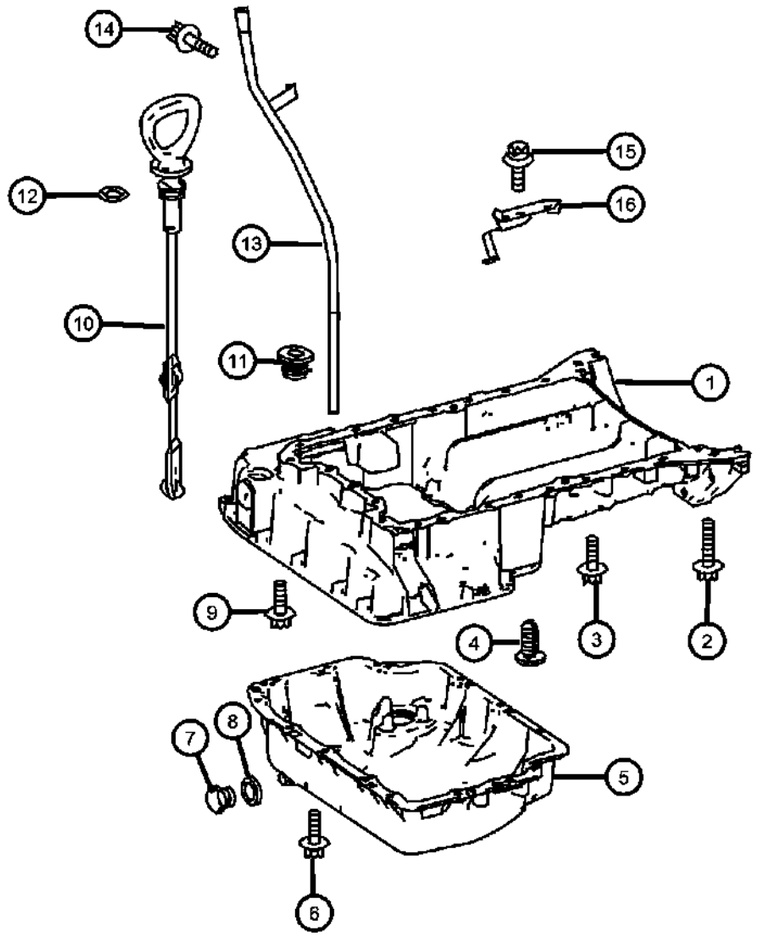

ITEM	PART NUMBER	QTY	LINE	SERIES	BODY	ENGINE	TRANS	TRIM	DESCRIPTION
NOTES:									
Sales Code									
[EXM] = 3.0L V6 Turbo Diesel Engine									
1	68006066AA	1	2, 3, 6, 7			EXM	DGZ		PAN, OilUpper
2									SCREW
	06104024AA	2	3, 7			EG2, EXM	DGZ		Oil Pan to Cylinder Crankcase M8x25
		2	2, 3, 6, 7			EG2, EXM	DGZ		Oil Pan to Cylinder Crankcase M8x25
3	06104009AA	2	2, 3, 6, 7			EG2, EXM	DGZ		BOLT, Bracket to Oil Pan M6x35
4	05175339AA	2	2, 3, 6, 7			EXM	DGZ		BRACKET, Oil Pan
5	68006079AA	1	2, 3, 6, 7			EXM	DGZ		PAN, OilLower
6	68006084AA	14	2, 3, 6, 7			EXM	DGZ		SCREW, Upper Pan to Lower
7	05073945AA	1	2, 3, 6, 7			EXM	DGZ		PLUG, Oil Drain
8	05073946AA	1	2, 3, 6, 7			EXM	DGZ		GASKET, Drain Plug
9	06104684AA	1	2, 3, 6, 7			EXM	DGZ		BOLT, Upper Part of Oil Pan to Crankcase M6x28
10	68006137AA	1	2, 3, 6, 7			EXM	DGZ		INDICATOR, Engine Oil Level
11	05096486AA	1	2, 3, 6, 7			EG2, EXM	DGZ		SEAL, Engine Oil Indicator tube
12	05073943AA	1	2, 3, 6, 7			EG2, EXM	DGZ		O RING, Engine Oil Indicator
13	68006098AA	1	2, 3, 6, 7			EXM	DGZ		TUBE, Engine Oil Indicator
14	05183964AA	4	2, 3, 6, 7			EXM	DGZ		BOLT, Hex Flange Head, M6x1.00x10.90
15	06104681AA	2	2, 3, 6, 7			EXM	DGZ		SCREW, Bracket to Cylinder Head Cover M6x15
16	68006148AA	1	2, 3, 6, 7			EXM	DGZ		BRACKET

SPRINTER (VB)

SERIES	LINE	BODY	ENGINE	TRANSMISSION
L = LOWLINE	3 = HD DODGE 2WD 6 = Lt. Duty DODGE 4WD 2 = Med. Duty DODGE 2WD 7 = Med. Duty DODGE 4WD	17 = VAN WHEEL BASE 7 55 = WAGON WHEEL BASE 5 15 = VAN WHEEL BASE 5 53 = 119 WB 13 = 119 WB 05 = CAB CHASSIS WHEEL BASE 5 03 = CAB CHASSIS WHEEL BASE 3	EG2 = 3.5L V6 Gas Engine EXM = 3.0L V6 Turbo Diesel Engine	DGZ = 5-Speed Auto W5A380 Transmission

Engine Oil Pan, Engine Oil level Indicator And Related Parts
Figure 009EXM-727

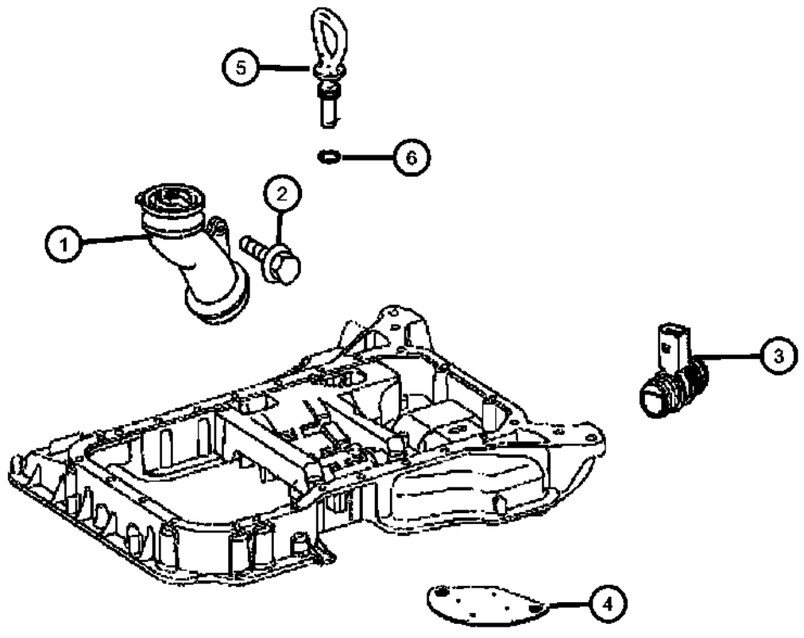

ITEM	PART NUMBER	QTY	LINE	SERIES	BODY	ENGINE	TRANS	TRIM	DESCRIPTION
1	68012402AA	1	2, 3, 6, 7			EXM	DGZ		HOUSING, Oil Fill
2	06104004AA	1	2, 3, 6, 7			EXM	DGZ		BOLT, [M6x16]
3	05117289AA	1	2, 3, 6, 7			EXM	DGZ		TUBE, Breather
4	05175810AA	1	2, 3, 6, 7			EXM	DGZ		COVER, Access Cover Crankcase
5	68006137AA	1	2, 3, 6, 7			EXM	DGZ		INDICATOR, Engine Oil Level
6	05073943AA	1	2, 3, 6, 7			EG2, EXM	DGZ		O RING, Engine Oil Indicator

SPRINTER (VB)

SERIES	LINE	BODY	ENGINE	TRANSMISSION
L = LOWLINE	3 = HD DODGE 2WD 6 = Lt. Duty DODGE 4WD 2 = Med. Duty DODGE 2WD 7 = Med. Duty DODGE 4WD	17 = VAN WHEEL BASE 7 55 = WAGON WHEEL BASE 5 15 = VAN WHEEL BASE 5 53 = 119 WB 13 = 119 WB 05 = CAB CHASSIS WHEEL BASE 5 03 = CAB CHASSIS WHEEL BASE 3	EG2 = 3.5L V6 Gas Engine EXM = 3.0L V6 Turbo Diesel Engine	DGZ = 5-Speed Auto W5A380 Transmission

AR = use ase required - = Non illustrrated part

<< RETURN TO GROUP INDEX

Engine Oil Filter, Adapter And Splash Guard
Figure 009EXM-745

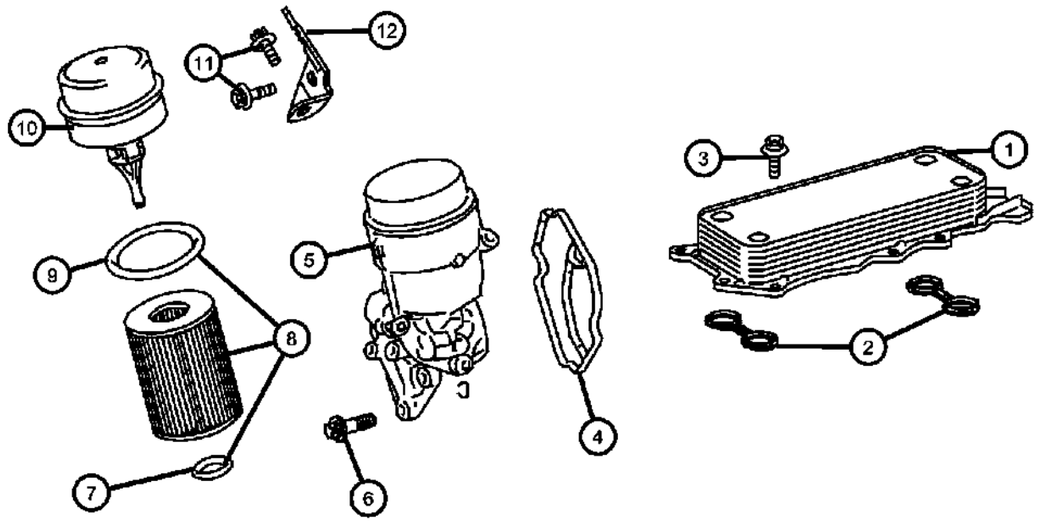

ITEM	PART NUMBER	QTY	LINE	SERIES	BODY	ENGINE	TRANS	TRIM	DESCRIPTION
NOTES: Sales Code [EXM] = 3.0L V6 Turbo Diesel Engine									
1	05179360AB	1	2, 3, 6, 7			EXM	DGZ		COOLER, Oil
2	05175579AA	2	2, 3, 6, 7			EXM	DGZ		GASKET, Oil Cooler to Cylinder Crankcase
3	05170732AA	10	2, 3, 6, 7			EXM	DGZ		SCREW, Oil Cooler to Cylinder Crankcase
4	05175574AA	1	2, 3, 6, 7			EXM	DGZ		GASKET, Oil Filter Housing, Oil Filter to Cylinder Crankcase
5	05175569AA	1	2, 3, 6, 7			EXM	DGZ		HOUSING, Oil Filter
6	05175577AA	4	2, 3, 6, 7			EXM	DGZ		BOLT, Oil Filter to Cylinder Crankcase M7x25 MK
7	05175573AA	1	2, 3, 6, 7			EXM	DGZ		O RING, Rod
8	05175571AA	1	2, 3, 6, 7			EXM	DGZ		FILTER, Engine Oil
9	05175572AA	1	2, 3, 6, 7			EXM	DGZ		O RING, On Cover
10	05175570AA	1	2, 3, 6, 7			EXM	DGZ		CAP, Oil Filter Housing
11	06104681AA	1	2, 3, 6, 7			EXM	DGZ		SCREW, Bracket to Oil Filter M6x15
12	05175847AA	1	2, 3, 6, 7			EXM	DGZ		BRACKET, Oil Filter to Cylinder Head
-13	05175847AA	1	2, 3, 6, 7			EXM	DGZ		BRACKET, Oil Filter To Cylinder Head

SPRINTER (VB)

SERIES	LINE	BODY	ENGINE	TRANSMISSION
L = LOWLINE	3 = HD DODGE 2WD 6 = Lt. Duty DODGE 4WD 2 = Med. Duty DODGE 2WD 7 = Med. Duty DODGE 4WD	17 = VAN WHEEL BASE 7 55 = WAGON WHEEL BASE 5 15 = VAN WHEEL BASE 5 53 = 119 WB 13 = 119 WB 05 = CAB CHASSIS WHEEL BASE 5 03 = CAB CHASSIS WHEEL BASE 3	EG2 = 3.5L V6 Gas Engine EXM = 3.0L V6 Turbo Diesel Engine	DGZ = 5-Speed Auto W5A380 Transmission

Engine Oil Cooler And Hoses/Tubes
Figure 009EXM-805

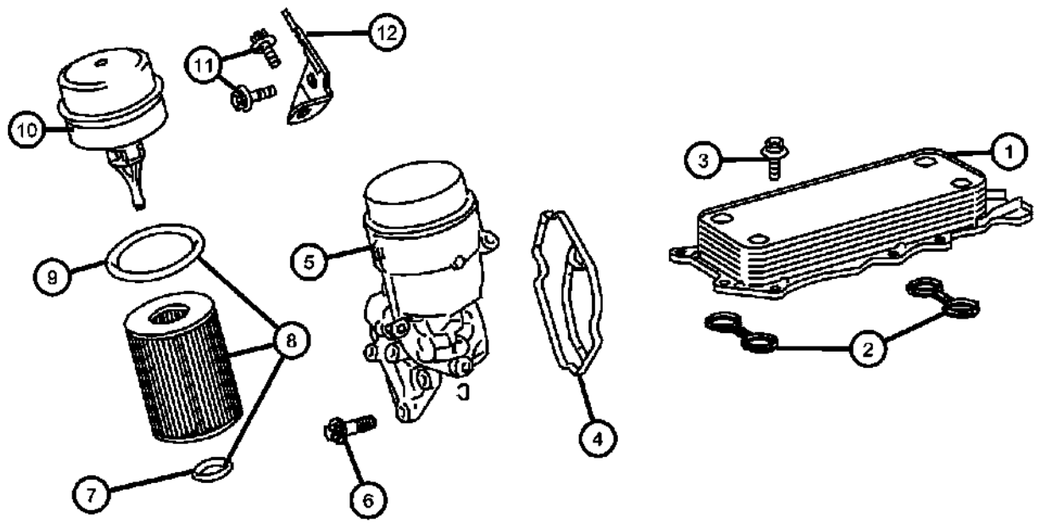

ITEM	PART NUMBER	QTY	LINE	SERIES	BODY	ENGINE	TRANS	TRIM	DESCRIPTION
NOTES: Sales Code [EXM] = 3.0L V6 Turbo Diesel Engine									
1	05179360AB	1	2, 3, 6, 7			EXM	DGZ		COOLER, Oil
2	05175579AA	2	2, 3, 6, 7			EXM	DGZ		GASKET, Oil Cooler to Cylinder Crankcase
3	05170732AA	10	2, 3, 6, 7			EXM	DGZ		SCREW, Oil Cooler to Cylinder Crankcase
4	05175574AA	1	2, 3, 6, 7			EXM	DGZ		GASKET, Oil Filter Housing, Oil Filter to Cylinder Crankcase
5	05175569AA	1	2, 3, 6, 7			EXM	DGZ		HOUSING, Oil Filter
6	05175577AA	4	2, 3, 6, 7			EXM	DGZ		BOLT, Oil Filter to Cylinder Crankcase M7x25 MK
7	05175573AA	1	2, 3, 6, 7			EXM	DGZ		O RING, Rod
8	05175571AA	1	2, 3, 6, 7			EXM	DGZ		FILTER, Engine Oil
9	05175572AA	1	2, 3, 6, 7			EXM	DGZ		O RING, On Cover
10	05175570AA	1	2, 3, 6, 7			EXM	DGZ		CAP, Oil Filter Housing
11	06104681AA	1	2, 3, 6, 7			EXM	DGZ		SCREW, Bracket to Oil Filter M6x15
12	05175847AA	1	2, 3, 6, 7			EXM	DGZ		BRACKET, Oil Filter to Cylinder Head
-13	05175847AA	1	2, 3, 6, 7			EXM	DGZ		BRACKET, Oil Filter To Cylinder Head

SPRINTER (VB)

SERIES	LINE	BODY	ENGINE	TRANSMISSION
L = LOWLINE	3 = HD DODGE 2WD 6 = Lt. Duty DODGE 4WD 2 = Med. Duty DODGE 2WD 7 = Med. Duty DODGE 4WD	17 = VAN WHEEL BASE 7 55 = WAGON WHEEL BASE 5 15 = VAN WHEEL BASE 5 53 = 119 WB 13 = 119 WB 05 = CAB CHASSIS WHEEL BASE 5 03 = CAB CHASSIS WHEEL BASE 3	EG2 = 3.5L V6 Gas Engine EXM = 3.0L V6 Turbo Diesel Engine	DGZ = 5-Speed Auto W5A380 Transmission

Turbo Charger And Oil Hoses/Tubes
Figure 009EXM-925

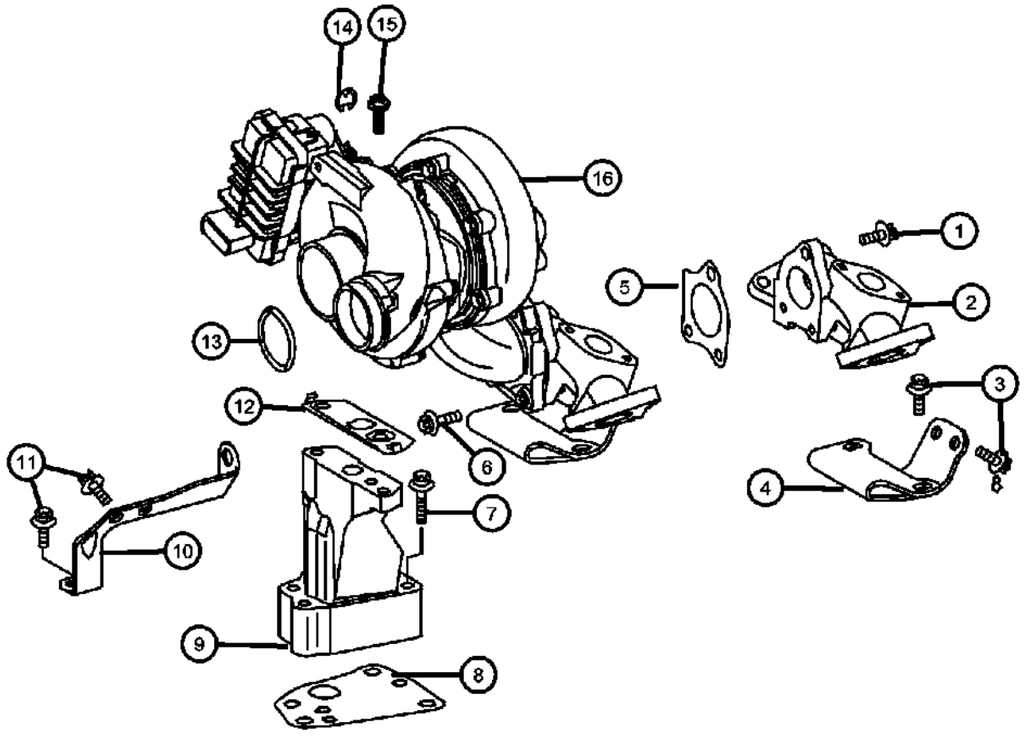

ITEM	PART NUMBER	QTY	LINE	SERIES	BODY	ENGINE	TRANS	TRIM	DESCRIPTION
NOTES: Sales Code [EXM] = 3.0L V6 Turbo Diesel Engine									
1	05073720AC	3	2, 3, 6, 7			EXM	DGZ		SCREW, Turbocharger to Exhaust Manifold
2	68004669AA	1	2, 3, 6, 7			EXM	DGZ		MANIFOLD
3	05073720AC	2	2, 3, 6, 7			EXM	DGZ		SCREW, Support Brace to Collector
4	68012295AA	1	2, 3, 6, 7			EXM	DGZ		BRACKET
5	05175629AA	1	2, 3, 6, 7			EXM	DGZ		GASKET, Turbocharger
6	05073720AC	2	2, 3, 6, 7			EXM	DGZ		SCREW, Bracket Mounting
7	05133207AA	4	2, 3, 6, 7			EXM	DGZ		BOLT, Support to Cylinder Crankcase M8x55
8	05175632AA	1	2, 3, 6, 7			EXM	DGZ		GASKET, Turbocharger
9	05175627AA	1	2, 3, 6, 7			EXM	DGZ		BRACKET, Turbo Charger
10	68012302AA	1	2, 3, 6, 7			EXM	DGZ		BRACKET
11	06104005AA	4	2, 3, 6, 7			EXM	DGZ		BOLT, 6 Lobe External Head, M6X1.00X16.00
12	05175630AA	1	2, 3, 6, 7			EXM	DGZ		GASKET, Turbocharger, Stay to Cylinder Head
13	05175626AA	1	2, 3, 6, 7			EXM	DGZ		O RING
14	05183127AA	2	2, 3, 6, 7			EXM	DGZ		RETAINER
15	05073710AA	2	2, 3, 6, 7			EXM	DGZ		SCREW, Turbocharger on Support
16	68019589AA	1	2, 3, 6, 7			EXM	DGZ		TURBOCHARGER

SPRINTER (VB)

SERIES	LINE	BODY	ENGINE	TRANSMISSION
L = LOWLINE	3 = HD DODGE 2WD 6 = Lt. Duty DODGE 4WD 2 = Med. Duty DODGE 2WD 7 = Med. Duty DODGE 4WD	17 = VAN WHEEL BASE 7 55 = WAGON WHEEL BASE 5 15 = VAN WHEEL BASE 5 53 = 119 WB 13 = 119 WB 05 = CAB CHASSIS WHEEL BASE 5 03 = CAB CHASSIS WHEEL BASE 3	EG2 = 3.5L V6 Gas Engine EXM = 3.0L V6 Turbo Diesel Engine	DGZ = 5-Speed Auto W5A380 Transmission

Exhaust Manifold And Heat Shields
Figure 009EXM-1005

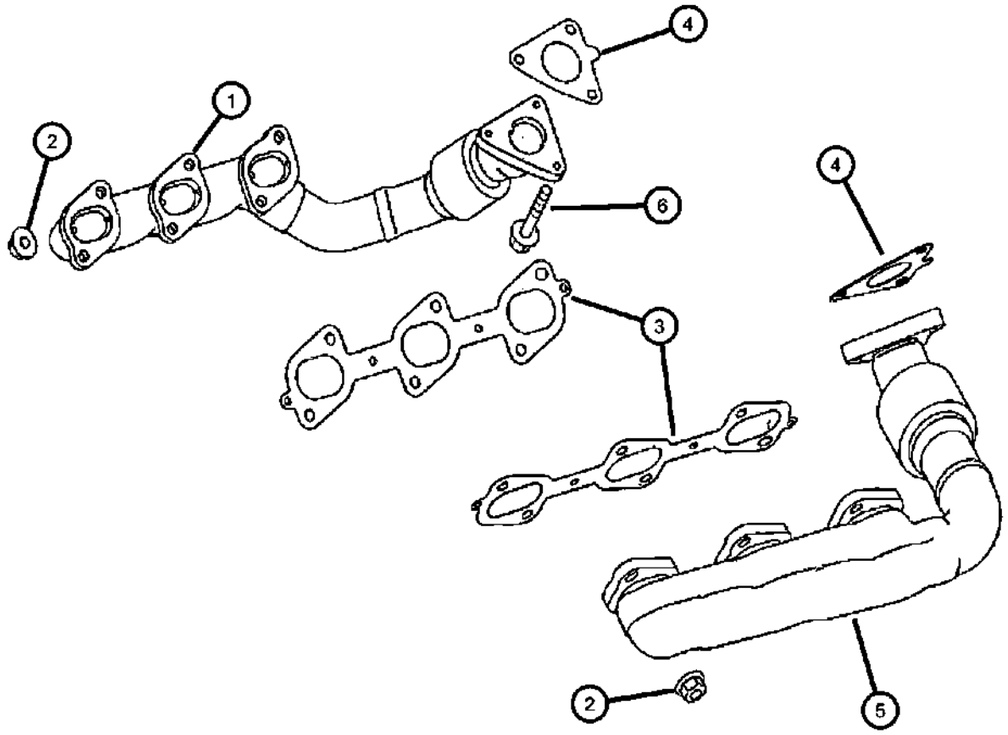

ITEM	PART NUMBER	QTY	LINE	SERIES	BODY	ENGINE	TRANS	TRIM	DESCRIPTION

NOTE:
Sales Codes:
[DGZ]=5 Speed Automatic Transmission [W5A380] - [Mercedes Benz]
[EXM]=3.0L Turbo Diesel V-6 Engine

1	05175746AA	1	2, 3, 6, 7			EXM	DGZ		MANIFOLD, ExhaustRight
2	06104729AA	6	2, 3, 6, 7			EXM	DGZ		NUT, Hex Flange Lock, M8X1.25
3	05175748AA	2	2, 3, 6, 7			EXM	DGZ		GASKET, Exhaust ManifoldRight & Left
4	05175751AA	1	2, 3, 6, 7			EXM	DGZ		GASKET, Exhaust manifold, To exhaust collector
5	05175747AA	1	2, 3, 6, 7			EXM	DGZ		MANIFOLD, ExhaustLeft
6	05073720AC	3	2, 3, 6, 7			EXM	DGZ		SCREW

SPRINTER (VB)

SERIES	LINE	BODY	ENGINE	TRANSMISSION
L = LOWLINE	3 = HD DODGE 2WD 6 = Lt. Duty DODGE 4WD 2 = Med. Duty DODGE 2WD 7 = Med. Duty DODGE 4WD	17 = VAN WHEEL BASE 7 55 = WAGON WHEEL BASE 5 15 = VAN WHEEL BASE 5 53 = 119 WB 13 = 119 WB 05 = CAB CHASSIS WHEEL BASE 5 03 = CAB CHASSIS WHEEL BASE 3	EG2 = 3.5L V6 Gas Engine EXM = 3.0L V6 Turbo Diesel Engine	DGZ = 5-Speed Auto W5A380 Transmission

Exhaust Gas Recirculation Cooler
Figure 009EXM-1010

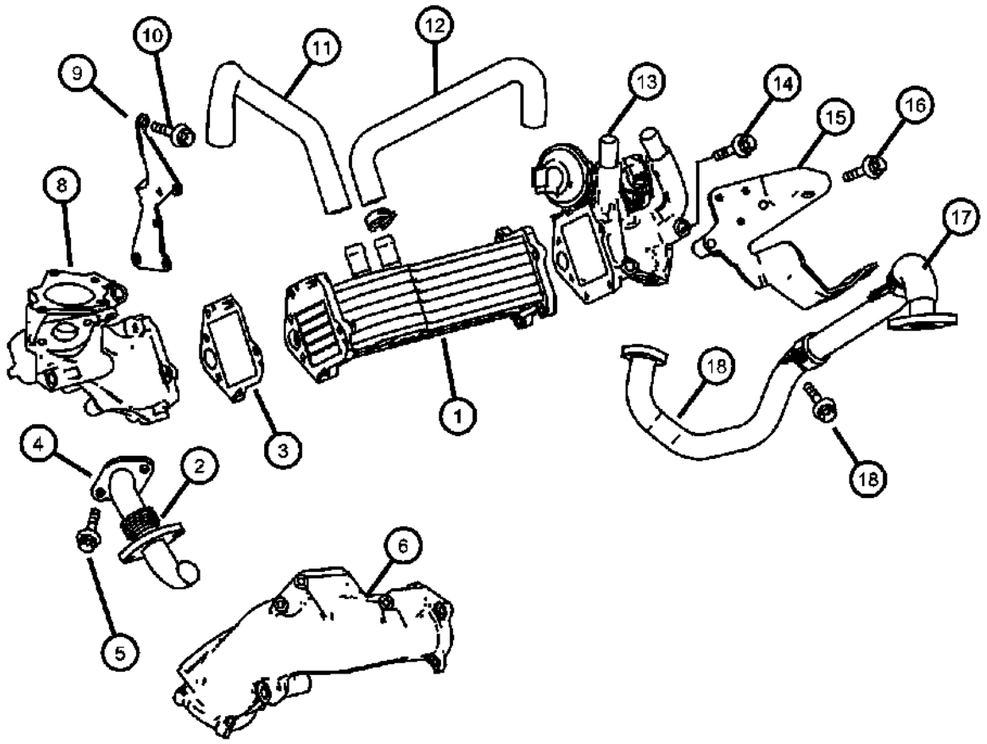

ITEM	PART NUMBER	QTY	LINE	SERIES	BODY	ENGINE	TRANS	TRIM	DESCRIPTION
NOTES:									
Sales Code									
[EXM] = 3.0L V6 Turbo Diesel Engine									
1	68014095AA	1	2, 3, 6, 7			EXM	DGZ		COOLER
2	68012322AA	1	2, 3, 6, 7			EXM	DGZ		TUBE
3	68014096AA	1	2, 3, 6, 7			EXM	DGZ		GASKET
4	05175695AA	1	2, 3, 6, 7			EXM	DGZ		GASKET
5	06104682AA	2	2, 3, 6, 7			EXM	DGZ		BOLT, [M6x19]
6	68012320AA	1	2, 3, 6, 7			EXM	DGZ		MANIFOLD, Intake, Transverse Tube Charge Air Pipe
-7	68012326AA	1	2, 3, 6, 7			EXM	DGZ		GASKET
8	68014081AA	1	2, 3, 6, 7			EXM	DGZ		HOUSING
9	68014098AA	1	2, 3, 6, 7			EXM	DGZ		BRACKET
10	05137660AA	2	2, 3, 6, 7			EXM	DGZ		SCREW
11	68014092AA	1	2, 3, 6, 7			EXM	DGZ		HOSE
12	68014093AA	1	2, 3, 6, 7			EXM	DGZ		HOSE
13	68014099AA	1	2, 3, 6, 7			EXM	DGZ		VALVE
14	06104036AA	2	2, 3, 6, 7			EXM	DGZ		SCREW
15	68014097AA	1	2, 3, 6, 7			EXM	DGZ		BRACKET
16	06104005AA	3	2, 3, 6, 7			EXM	DGZ		BOLT, 6 Lobe External Head, M6X1.00X16.00
17	68014094AA	1	2, 3, 6, 7			EXM	DGZ		TUBE
18	06104004AA	2	2, 3, 6, 7			EXM	DGZ		BOLT

SPRINTER (VB)

SERIES	LINE	BODY	ENGINE	TRANSMISSION
L = LOWLINE	3 = HD DODGE 2WD 6 = Lt. Duty DODGE 4WD 2 = Med. Duty DODGE 2WD 7 = Med. Duty DODGE 4WD	17 = VAN WHEEL BASE 7 55 = WAGON WHEEL BASE 5 15 = VAN WHEEL BASE 5 53 = 119 WB 13 = 119 WB 05 = CAB CHASSIS WHEEL BASE 5 03 = CAB CHASSIS WHEEL BASE 3	EG2 = 3.5L V6 Gas Engine EXM = 3.0L V6 Turbo Diesel Engine	DGZ = 5-Speed Auto W5A380 Transmission

Intake Manifold
Figure 009EXM-1025

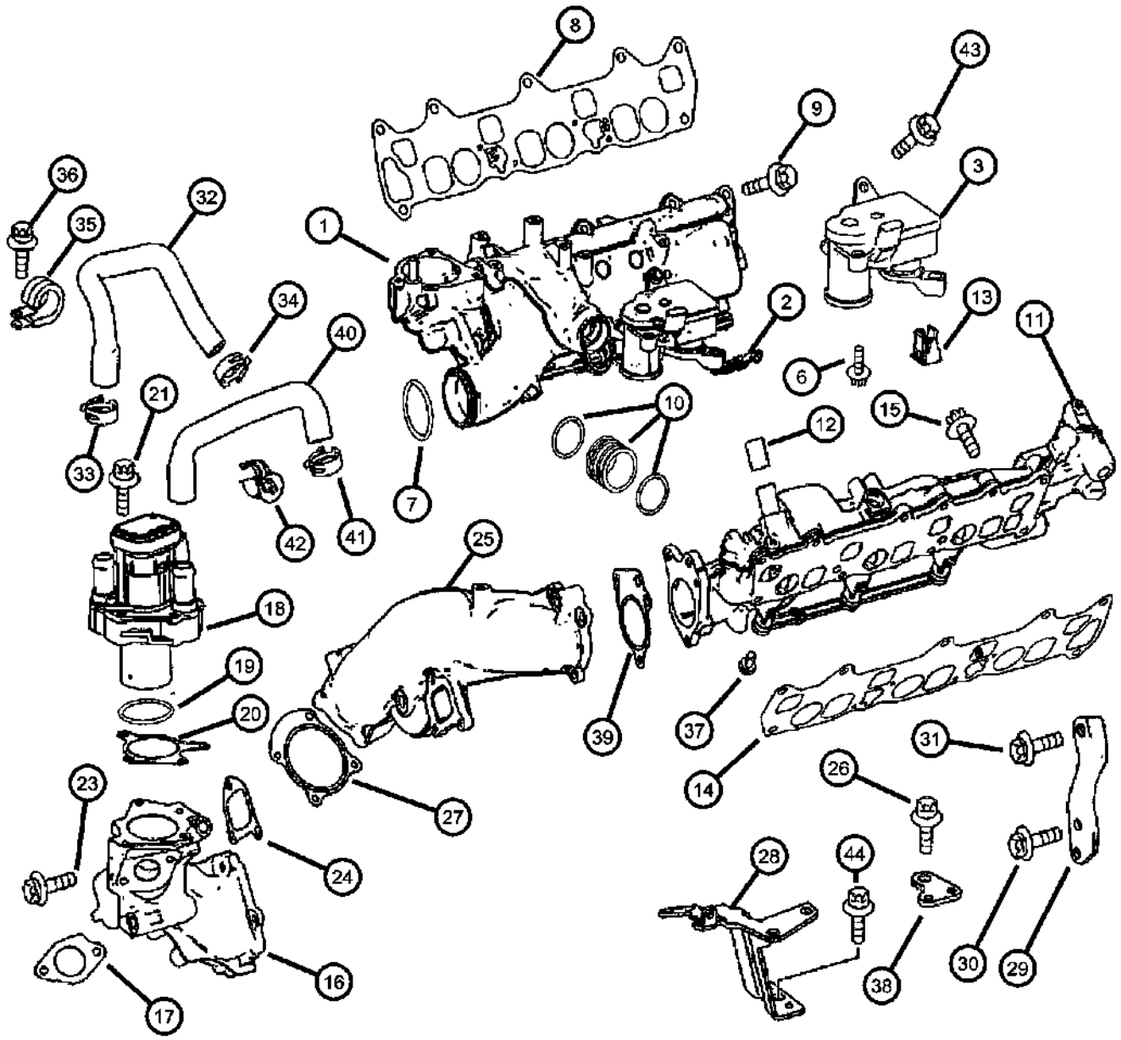

ITEM	PART NUMBER	QTY	LINE	SERIES	BODY	ENGINE	TRANS	TRIM	DESCRIPTION
NOTE:									
Sales Codes:									
[DGZ]=5 Speed Automatic Transmission [W5A380] - [Mercedes Benz]									
[EXM]=3.0L Turbo Diesel V-6 Engine									
1	68012303AA	1	2, 3, 6, 7			EXM	DGZ		MANIFOLD, IntakeRight
2	68001951AA	3	2, 3, 6, 7			EXM	DGZ		CLIP, Swirl Actuator
3	05175643AB	1	2, 3, 6, 7			EXM	DGZ		MOTOR
-4	68011814AA	1	2, 3, 6, 7			EXM	DGZ		CONNECTOR, [4 Pin] Connector For Setting Motor
-5	68011878AA	AR	2, 3, 6, 7			EG2, EXM	DGZ		TERMINAL, [0.22 - 0.5 MM2]
6	68012305AA	2	2, 3, 6, 7			EXM	DGZ		SCREW, [M6x12]
7	05175644AA	1	2, 3, 6, 7			EXM	DGZ		O RING
8	05175645AA	1	2, 3, 6, 7			EXM	DGZ		GASKET
9									BOLT
	05073688AB	2	2, 3, 6, 7			EXM	DGZ		Braket Mounting [M7x40]
	05073702AA	5	2, 3, 6, 7			EXM	DGZ		Charge Air Distributor Line To Head
	05125741AA	1	2, 3, 6, 7			EXM	DGZ		[M7x100]
	05175646AA	2	2, 3, 6, 7			EXM	DGZ		[M7x70]
10	05175668AA	1	2, 3, 6, 7			EXM	DGZ		SLEEVE, Insert
11	68012310AA	1	2, 3, 6, 7			EXM	DGZ		MANIFOLD, IntakeLeft
12	68028882AA	1	2, 3, 6, 7			EXM	DGZ		CONNECTOR
13	05175673AA	3	2, 3, 6, 7			EXM	DGZ		INSERT
14	05175645AA	1	2, 3, 6, 7			EXM	DGZ		GASKET
15									BOLT
	05073688AB	4	2, 3, 6, 7			EXM	DGZ		[M7X40]
	05073702AA	3	2, 3, 6, 7			EXM	DGZ		
	05175646AA	3	2, 3, 6, 7			EXM	DGZ		[M7x70]
16	68014081AA	1	2, 3, 6, 7			EXM	DGZ		HOUSING, Exhaust Gas Resirculation Valve
17	05175695AA	1	2, 3, 6, 7			EXM	DGZ		GASKET
18	68014083AA	1	2, 3, 6, 7			EXM	DGZ		VALVE, EGR
19	68001387AA	1	2, 3, 6, 7			EXM	DGZ		GASKET, EGR Valve, Exhaust Gas Recirculation Valve O-Ring
20	68014085AA	1	2, 3, 6, 7			EXM	DGZ		GASKET, Valve To Housing

SPRINTER (VB)

SERIES	LINE	BODY	ENGINE	TRANSMISSION
L = LOWLINE	3 = HD DODGE 2WD 6 = Lt. Duty DODGE 4WD 2 = Med. Duty DODGE 2WD 7 = Med. Duty DODGE 4WD	17 = VAN WHEEL BASE 7 55 = WAGON WHEEL BASE 5 15 = VAN WHEEL BASE 5 53 = 119 WB 13 = 119 WB 05 = CAB CHASSIS WHEEL BASE 5 03 = CAB CHASSIS WHEEL BASE 3	EG2 = 3.5L V6 Gas Engine EXM = 3.0L V6 Turbo Diesel Engine	DGZ = 5-Speed Auto W5A380 Transmission

Intake Manifold
Figure 009EXM-1025

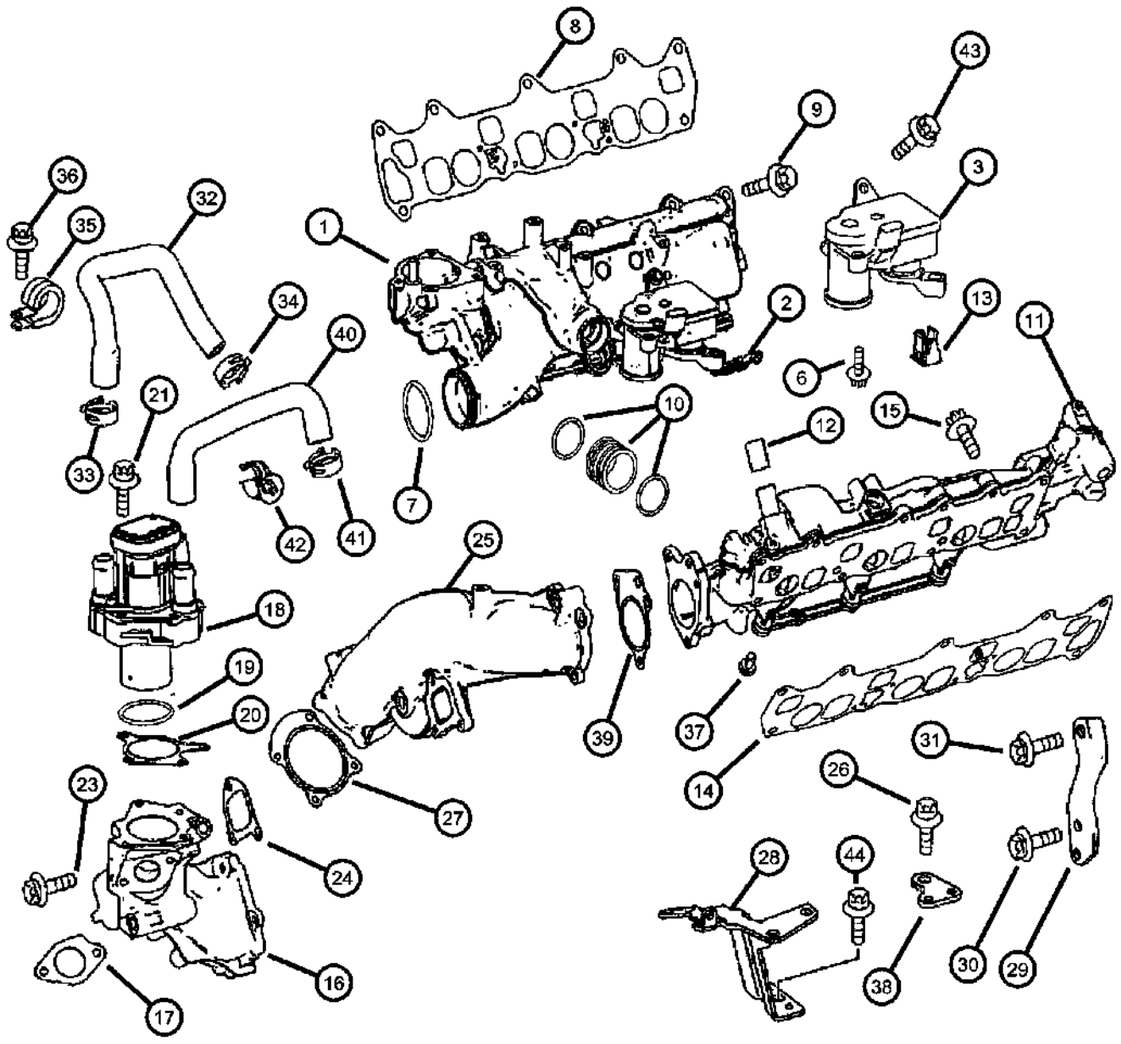

ITEM	PART NUMBER	QTY	LINE	SERIES	BODY	ENGINE	TRANS	TRIM	DESCRIPTION
21	06104683AA	2	2, 3, 6, 7			EXM	DGZ		BOLT, 6 Lobe External Head, M6x1.0x23.0, Valve To Distribution Line
-22	06104010AA	4	2, 3, 6, 7			EXM	DGZ		BOLT, M6X1.0X40, Valve To Housing
23	06104008AA	3	2, 3, 6, 7			EXM	DGZ		SCREW, Valve Body To Charge Air Cross Pipe [M6x30]
24	68014086AA	1	2, 3, 6, 7			EXM	DGZ		GASKET
25	68012320AA	1	2, 3, 6, 7			EXM	DGZ		MANIFOLD, Intake
26	06104032AA	1	2, 3, 6, 7			EXM	DGZ		SCREW, [M8x65]
27	68012326AA	1	2, 3, 6, 7			EXM	DGZ		GASKET
28	68012327AA	1	2, 3, 6, 7			EXM	DGZ		BRACKET
29	68014087AA	1	2, 3, 6, 7			EXM	DGZ		BRACKET
30	06104006AA	1	2, 3, 6, 7			EXM	DGZ		BOLT, Torx Socket Head, M6X1.00X20.00
31	06104028AA	1	2, 3, 6, 7			EXM	DGZ		SCREW, [M8x45]
32	68014088AA	1	2, 3, 6, 7			EXM	DGZ		HOSE
33	06104804AA	1	2, 3, 6, 7			EXM	DGZ		CLAMP
34	68004905AA	1	2, 3, 6, 7			EG2, EXM	DGZ		CLAMP
35	05132913AA	1	2, 3, 6, 7			EXM	DGZ		CLAMP
36	06104005AA	1	2, 3, 6, 7			EXM	DGZ		BOLT, 6 Lobe External Head, M6X1.00X16.00
37	68001951AA	3	2, 3, 6, 7			EXM	DGZ		CLIP, Swirl Actuator
38	68012324AA	1	2, 3, 6, 7			EXM	DGZ		BRACKET, Air Duct
39	68012321AA	1	2, 3, 6, 7			EXM	DGZ		GASKET
40	68014091AA	1	2, 3, 6, 7			EXM	DGZ		HOSE, HOSE
41	68004905AA	1	2, 3, 6, 7			EG2, EXM	DGZ		CLAMP
42	68014090AA	1	2, 3, 6, 7			EXM	DGZ		CLIP, CLIP
43	06104683AA	2	2, 3, 6, 7			EXM	DGZ		BOLT, 6 Lobe External Head, M6x1.0x23.0
44	06104004AA	1	2, 3, 6, 7			EXM	DGZ		BOLT, [M6x12]

SPRINTER (VB)

SERIES	LINE	BODY	ENGINE	TRANSMISSION
L = LOWLINE	3 = HD DODGE 2WD 6 = Lt. Duty DODGE 4WD 2 = Med. Duty DODGE 2WD 7 = Med. Duty DODGE 4WD	17 = VAN WHEEL BASE 7 55 = WAGON WHEEL BASE 5 15 = VAN WHEEL BASE 5 53 = 119 WB 13 = 119 WB 05 = CAB CHASSIS WHEEL BASE 5 03 = CAB CHASSIS WHEEL BASE 3	EG2 = 3.5L V6 Gas Engine EXM = 3.0L V6 Turbo Diesel Engine	DGZ = 5-Speed Auto W5A380 Transmission

Intake Manifold
Figure 009EXM-1045

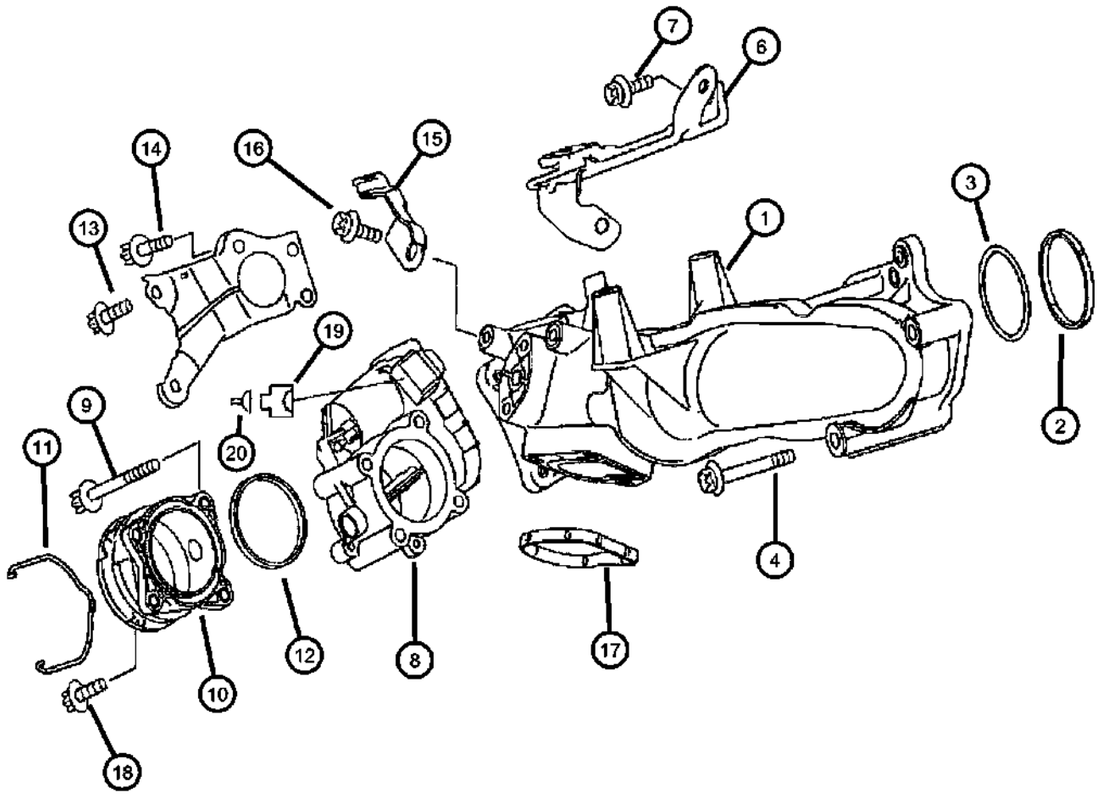

ITEM	PART NUMBER	QTY	LINE	SERIES	BODY	ENGINE	TRANS	TRIM	DESCRIPTION
NOTE: Sales Codes: [DGZ]=5 Speed Automatic Transmission [W5A380] - [Mercedes Benz] [EXM]=3.0L Turbo Diesel V-6 Engine									
1	68012320AA	1	2, 3, 6, 7			EXM	DGZ		MANIFOLD, Intake, Crossover Pipe
2	05175710AA	1	2, 3, 6, 7			EXM	DGZ		O RING
3	68012321AA	1	2, 3, 6, 7			EXM	DGZ		GASKET
4	06104188AA	1	2, 3, 6, 7			EXM	DGZ		BOLT, Torx Head, M6x1.0x55.00
-5	06104018AA	1	2, 3, 6, 7			EXM	DGZ		BOLT, Torx Head, M6x1.00x90.00
6	68012324AA	1	2, 3, 6, 7			EXM	DGZ		BRACKET, Air Duct
7	06104032AA	1	2, 3, 6, 7			EXM	DGZ		SCREW, [M8x65]
8	68012325AA	1	2, 3, 6, 7			EXM	DGZ		THROTTLE BODY, Service Manual Name [EGR] Airflow Valve
9	05175723AA	3	2, 3, 6, 7			EXM	DGZ		SCREW, [M5x80]
10	05175728AA	1	2, 3, 6, 7			EXM	DGZ		FLANGE, Intake throttle
11	05080315AA	1	2, 3, 6, 7			EXM	DGZ		SPRING
12	05175729AA	1	2, 3, 6, 7			EXM	DGZ		GASKET
13	06104683AA	3	7, 2, 3, 6			EXM	DGZ		BOLT, 6 Lobe External Head, M6x1.0x23.0
14	06104005AA	2	2, 3, 6, 7			EXM	DGZ		BOLT, 6 Lobe External Head, M6X1.00X16.00
15	68012389AA	1	2, 3, 6, 7			EXM	DGZ		BRACKET
16	06104004AA	1	2, 3, 6, 7			EXM	DGZ		BOLT, [M6x12]
17	05175712AA	1	2, 3, 6, 7			EXM	DGZ		O RING
18	06104683AA	3	2, 3, 6, 7			EXM	DGZ		BOLT, 6 Lobe External Head, M6x1.0x23.0
19	05143912AA	1	2, 3, 6, 7			EG2, EXM	DGZ		CONNECTOR
20	05138911AA	AR	2, 3, 6, 7			EXM	DGZ		TERMINAL, [.05-.075 MM]
-21	05138038AA	1	2, 3, 6, 7			EG2, EXM	DGZ		PLUG, [S33] Connector
-22	05120860AA	1	2, 3, 6, 7			EG2, EXM	DGZ		GASKET, [1.6-1.9MM / MM2] [S33] Connector

SPRINTER (VB)

SERIES	LINE	BODY	ENGINE	TRANSMISSION
L = LOWLINE	3 = HD DODGE 2WD 6 = Lt. Duty DODGE 4WD 2 = Med. Duty DODGE 2WD 7 = Med. Duty DODGE 4WD	17 = VAN WHEEL BASE 7 55 = WAGON WHEEL BASE 5 15 = VAN WHEEL BASE 5 53 = 119 WB 13 = 119 WB 05 = CAB CHASSIS WHEEL BASE 5 03 = CAB CHASSIS WHEEL BASE 3	EG2 = 3.5L V6 Gas Engine EXM = 3.0L V6 Turbo Diesel Engine	DGZ = 5-Speed Auto W5A380 Transmission

AR = use ase required - = Non illustrrated part

<< RETURN TO GROUP INDEX

Crankcase Ventilation
Figure 009EXM-1105

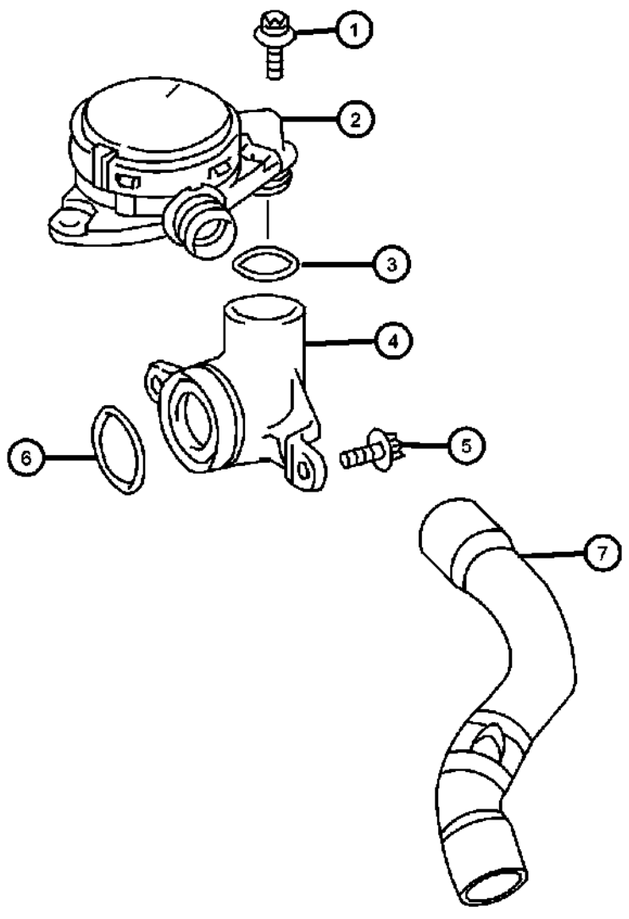

ITEM	PART NUMBER	QTY	LINE	SERIES	BODY	ENGINE	TRANS	TRIM	DESCRIPTION
NOTES: Sales Code: [EXM] = 3.0L V6 Turbo Diesel Engine									
1	06104682AA	3	2, 3, 6, 7			EXM	DGZ		BOLT, Valve to Cylinder Head Cover M6x19
2	68014022AA	1	2, 3, 6, 7			EXM	DGZ		VALVE, PCV, Pressure Control Valve-ZJ9
3	05175515AA	1	2, 3, 6, 7			EXM	DGZ		O RING
4	05175512AA	1	2, 3, 6, 7			EXM	DGZ		COVER
5	06104005AA	2	2, 3, 6, 7			EXM	DGZ		BOLT, 6 Lobe External Head, M6X1.00X16.00
6	05175513AA	1	2, 3, 6, 7			EXM	DGZ		O RING
7	68014024AA	1	2, 3, 6, 7			EXM	DGZ		HOSE, Pressure Valve to Intake Pipe

SPRINTER (VB)

SERIES	LINE	BODY	ENGINE	TRANSMISSION
L = LOWLINE	3 = HD DODGE 2WD 6 = Lt. Duty DODGE 4WD 2 = Med. Duty DODGE 2WD 7 = Med. Duty DODGE 4WD	17 = VAN WHEEL BASE 7 55 = WAGON WHEEL BASE 5 15 = VAN WHEEL BASE 5 53 = 119 WB 13 = 119 WB 05 = CAB CHASSIS WHEEL BASE 5 03 = CAB CHASSIS WHEEL BASE 3	EG2 = 3.5L V6 Gas Engine EXM = 3.0L V6 Turbo Diesel Engine	DGZ = 5-Speed Auto W5A380 Transmission

Engine Mounting Right Side RWD/2WD
Figure 009EXM-1230

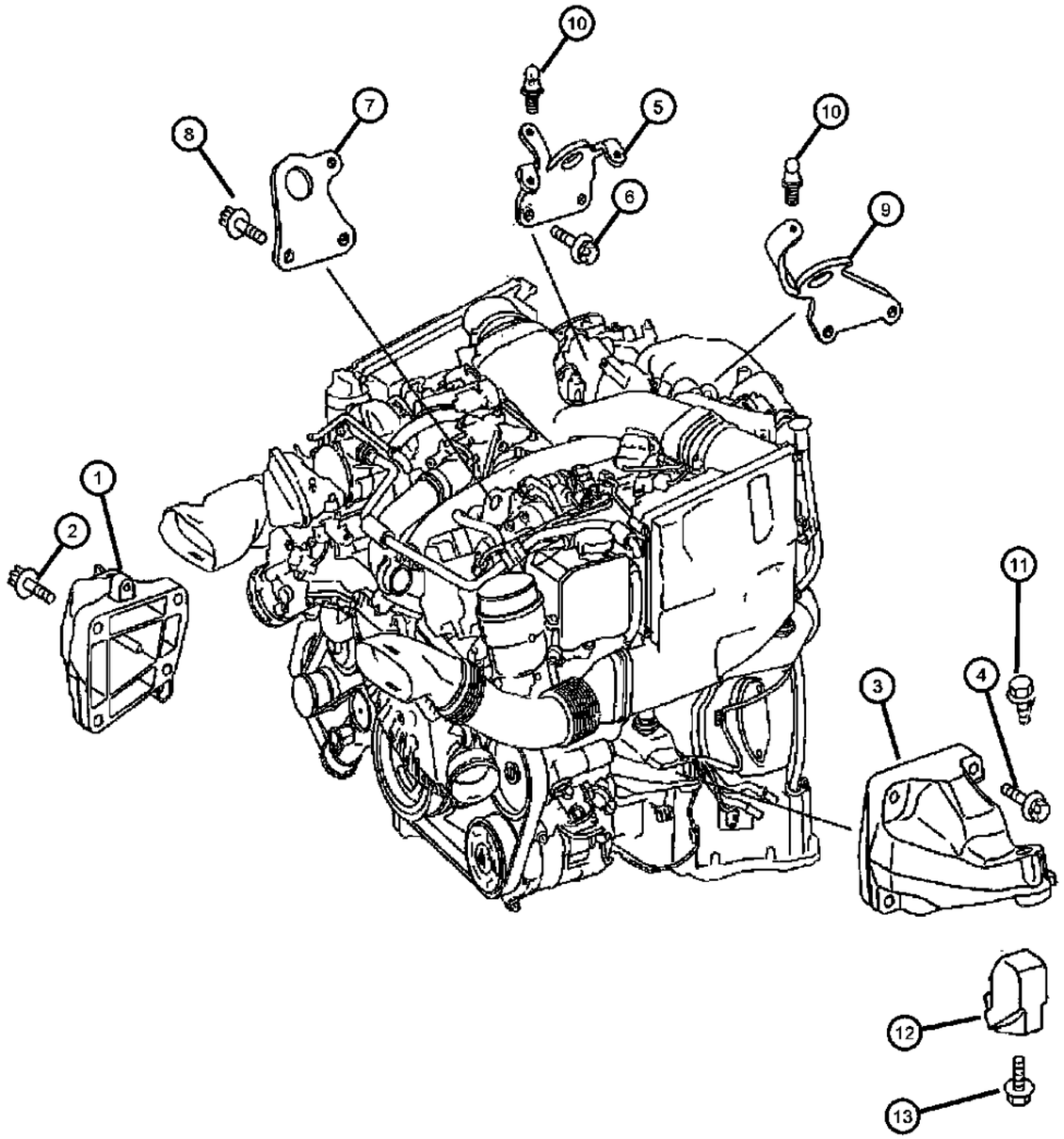

ITEM	PART NUMBER	QTY	LINE	SERIES	BODY	ENGINE	TRANS	TRIM	DESCRIPTION
NOTES:									
Sales Code:									
[DGZ]=5 Speed Automatic Transmission [W5A380]									
[EXM] = 3.0L V6 Turbo Diesel Engine									
1	68006041AA	1	2, 3, 6, 7			EXM	DGZ		SUPPORT, Engine
2	06104028AA	1	2, 3, 6, 7			EXM	DGZ		SCREW, [M8x42]
3	68006050AA	1	2, 3, 6, 7			EXM	DGZ		SUPPORT, Engine
4	06104028AA	1	2, 3, 6, 7			EXM	DGZ		SCREW, [M8x45]
5	68006052AA	1	2, 3, 6, 7			EXM	DGZ		RING
6	05073701AA	2	2, 3, 6, 7			EXM	DGZ		SCREW, [M7x20]
7	68006053AA	1	2, 3, 6, 7			EXM	DGZ		RING
8	05073701AA	2	2, 3, 6, 7			EXM	DGZ		SCREW, [M7x20]
9	68003536AA	1	2, 3, 6, 7			EXM	DGZ		BRACKET, Engine Lift
10	05179385AA	6	2, 3, 6, 7			EXM	DGZ		PIN, Locating, Engine Cover
11	06104041AA	2	2, 3, 6, 7			EG2, EXM	DGZ		SCREW, [M10x16], Right or Left, Lower
12	68005193AA	2	2, 3, 6, 7			EXM	DGZ		BRACKET AND INSULATOR, Engine MountingRight & Left
13	06104041AA	2	2, 3, 6, 7			EG2, EXM	DGZ		SCREW

SPRINTER (VB)

SERIES	LINE	BODY	ENGINE	TRANSMISSION
L = LOWLINE	3 = HD DODGE 2WD 6 = Lt. Duty DODGE 4WD 2 = Med. Duty DODGE 2WD 7 = Med. Duty DODGE 4WD	17 = VAN WHEEL BASE 7 55 = WAGON WHEEL BASE 5 15 = VAN WHEEL BASE 5 53 = 119 WB 13 = 119 WB 05 = CAB CHASSIS WHEEL BASE 5 03 = CAB CHASSIS WHEEL BASE 3	EG2 = 3.5L V6 Gas Engine EXM = 3.0L V6 Turbo Diesel Engine	DGZ = 5-Speed Auto W5A380 Transmission

Engine Mounting Left Side RWD/2WD
Figure 009EXM-1250

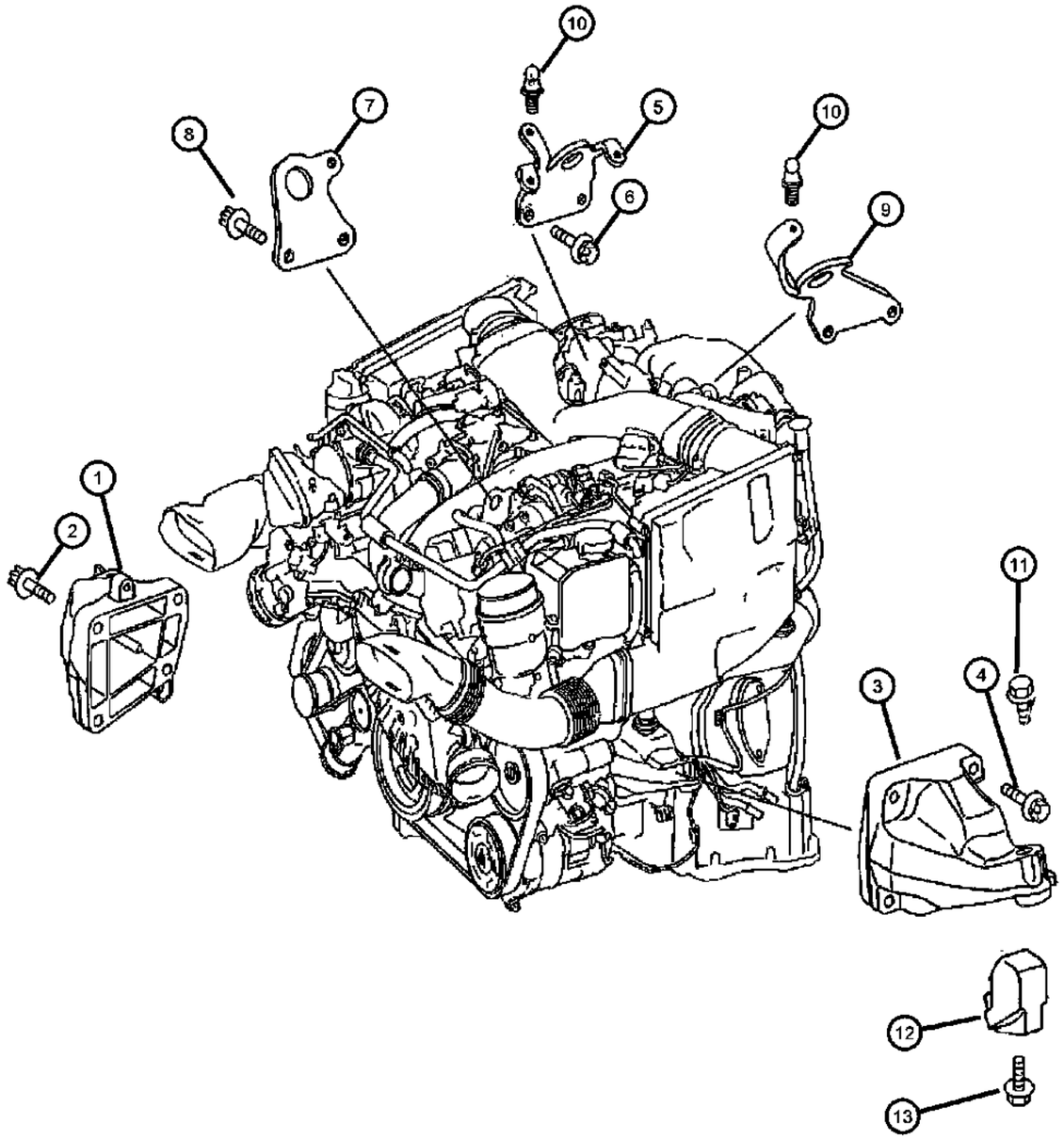

ITEM	PART NUMBER	QTY	LINE	SERIES	BODY	ENGINE	TRANS	TRIM	DESCRIPTION
NOTES:									
Sales Code:									
[DGZ]=5 Speed Automatic Transmission [W5A380]									
[EXM] = 3.0L V6 Turbo Diesel Engine									
1	68006041AA	1	2, 3, 6, 7			EXM	DGZ		SUPPORT, Engine
2	06104028AA	1	2, 3, 6, 7			EXM	DGZ		SCREW, [M8x42]
3	68006050AA	1	2, 3, 6, 7			EXM	DGZ		SUPPORT, Engine
4	06104028AA	1	2, 3, 6, 7			EXM	DGZ		SCREW, [M8x45]
5	68006052AA	1	2, 3, 6, 7			EXM	DGZ		RING
6	05073701AA	2	2, 3, 6, 7			EXM	DGZ		SCREW, [M7x20]
7	68006053AA	1	2, 3, 6, 7			EXM	DGZ		RING
8	05073701AA	2	2, 3, 6, 7			EXM	DGZ		SCREW, [M7x20]
9	68003536AA	1	2, 3, 6, 7			EXM	DGZ		BRACKET, Engine Lift
10	05179385AA	6	2, 3, 6, 7			EXM	DGZ		PIN, Locating, Engine Cover
11	06104041AA	2	2, 3, 6, 7			EG2, EXM	DGZ		SCREW, [M10x16], Right or Left, Lower
12	68005193AA	2	2, 3, 6, 7			EXM	DGZ		BRACKET AND INSULATOR, Engine MountingRight & Left
13	06104041AA	2	2, 3, 6, 7			EG2, EXM	DGZ		SCREW

SPRINTER (VB)

SERIES	LINE	BODY	ENGINE	TRANSMISSION
L = LOWLINE	3 = HD DODGE 2WD 6 = Lt. Duty DODGE 4WD 2 = Med. Duty DODGE 2WD 7 = Med. Duty DODGE 4WD	17 = VAN WHEEL BASE 7 55 = WAGON WHEEL BASE 5 15 = VAN WHEEL BASE 5 53 = 119 WB 13 = 119 WB 05 = CAB CHASSIS WHEEL BASE 5 03 = CAB CHASSIS WHEEL BASE 3	EG2 = 3.5L V6 Gas Engine EXM = 3.0L V6 Turbo Diesel Engine	DGZ = 5-Speed Auto W5A380 Transmission

Group - 10

Restraints

Illustration Title — Group-Fig. No.

Air Bags

Air Bag Modules, Impact Sensors and Clock Spring ..... Fig. 10 - 205
Air Bag Modules, Impact Sensors and Clock Spring ..... Fig. 10 - 210
Air Bag Modules, Impact Sensors and Clock Spring ..... Fig. 10 - 215
Air Bag Modules, Impact Sensors and Clock Spring ..... Fig. 10 - 220
Air Bags Front ..... Fig. 10 - 225
Window And Side Air Bag ..... Fig. 10 - 230

Seat Belts

Seat Belts First Row ..... Fig. 10 - 305

010-200 Air Bags	**010-300** Seat Belts		

Air Bag Modules, Impact Sensors and Clock Spring
Figure 10-205

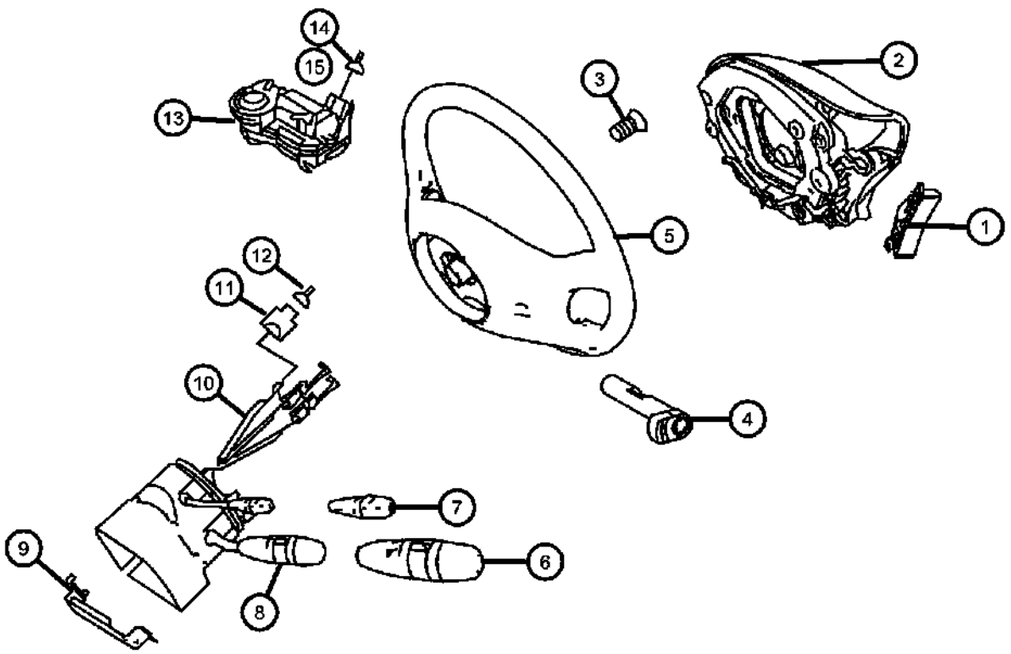

ITEM	PART NUMBER	QTY	LINE	SERIES	BODY	ENGINE	TRANS	TRIM	DESCRIPTION
1	68010427AA	1	2, 3, 6, 7	L					SWITCH, Steering Wheel, Reconfigurable, One Pair
2									AIR BAG, Driver
	68010423AA	1	2, 3	L					Dodge with Steering Wheel Controls
	68010426AA	1	2, 3	L					Dodge without Steering Wheel Controls
	68020911AA	1	6, 7	L					Freightliner with Steering Wheel Controls
	68020912AA	1	6, 7	L					Freightliner without Steering Wheel Controls
3									BOLT, BOLT
	04649132AA	1	3, 7	L	03, 05				M16
		1	2, 3, 6, 7	L	13, 15, 17, 53, 55				M16
4	68010438AA	1	2, 3, 6, 7	L					PIN
5	68010421AA	1	2, 3, 6, 7	L					WHEEL, Steering
6	68010446AA	1	2, 3, 6, 7	L					COVER, Blinker Switch
7	68010447AA	1	2, 3, 6, 7	L					COVER, Switch
8	68010449AA	1	2, 3, 6, 7	L					SWITCH, Multifunction
9	68010457AA	1	2, 3, 6, 7	L					BRACKET, Steering Column
10	68010451AA	1	2, 3, 6, 7	L					CLOCKSPRING
11									CONNECTOR
	05120717AA	1	3, 7	L	03, 05				Jacket Tube Module 3-Pin,COD.A
		1	2, 3, 6, 7	L	13, 15, 17, 53, 55				Jacket Tube Module 3-Pin,COD.A
12									TERMINAL
	05103873AA	3	3, 7	L	03, 05				0.75MM2 MQS
		3	2, 3, 6, 7	L	13, 15, 17, 53, 55				0.75MM2 MQS
13	68010437AA	1	2, 3, 6, 7	L					MODULE, Steering Control
14	05133370AA	2	2, 3, 6, 7	L					TERMINAL, [1.5-2.5MM2 JPT;N26/5]
15									GASKET
	05120833AA	2	2, 3, 6, 7	L					1.0-2.5MM;N25/5
	05120858AA	2	2, 3, 6, 7	L					N26/5

SPRINTER (VB)

SERIES	LINE	BODY	ENGINE	TRANSMISSION
L = LOWLINE	3 = HD DODGE 2WD 6 = Lt. Duty DODGE 4WD 2 = Med. Duty DODGE 2WD 7 = Med. Duty DODGE 4WD	17 = VAN WHEEL BASE 7 55 = WAGON WHEEL BASE 5 15 = VAN WHEEL BASE 5 53 = 119 WB 13 = 119 WB 05 = CAB CHASSIS WHEEL BASE 5 03 = CAB CHASSIS WHEEL BASE 3	EG2 = 3.5L V6 Gas Engine EXM = 3.0L V6 Turbo Diesel Engine	DGZ = 5-Speed Auto W5A380 Transmission

Air Bag Modules, Impact Sensors and Clock Spring
Figure 10-210

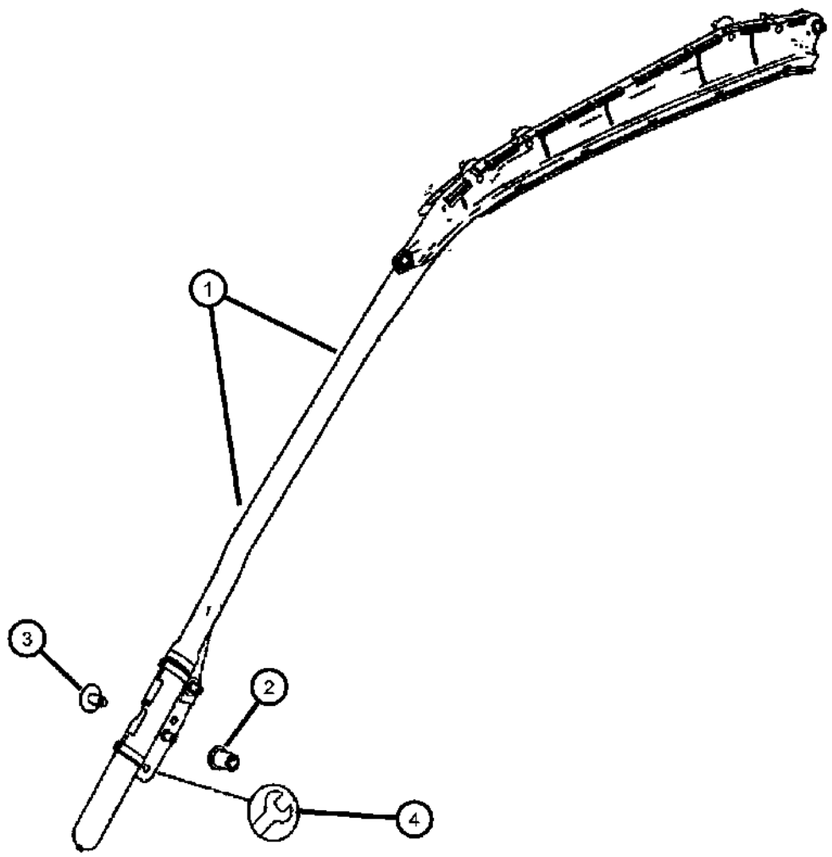

ITEM	PART NUMBER	QTY	LINE	SERIES	BODY	ENGINE	TRANS	TRIM	DESCRIPTION
1									AIR BAG, Side Curtain
	1HD69NC-VAA	1	2, 3, 6, 7	L				*A6	[A6], Left
		1	2, 3, 6, 7	L				*E7	[E7], Left
		1	2, 3, 6, 7	L				*F7	[F7], Left
	1HD70NC-VAA	1	2, 3, 6, 7	L				*A6	[A6], Right
		1	2, 3, 6, 7	L				*E7	[E7], Right
		1	2, 3, 6, 7	L				*F7	[F7], Right
2	05133486AA	4	2, 3, 6, 7	L					RIVET
3	68014337AA	8	2, 3, 6, 7	L					SCREW
4	68016751AA	2	2, 3, 6, 7	L					CONNECTORRight & Left

SPRINTER (VB)

SERIES	LINE	BODY	ENGINE	TRANSMISSION
L = LOWLINE	3 = HD DODGE 2WD 6 = Lt. Duty DODGE 4WD 2 = Med. Duty DODGE 2WD 7 = Med. Duty DODGE 4WD	17 = VAN WHEEL BASE 7 55 = WAGON WHEEL BASE 5 15 = VAN WHEEL BASE 5 53 = 119 WB 13 = 119 WB 05 = CAB CHASSIS WHEEL BASE 5 03 = CAB CHASSIS WHEEL BASE 3	EG2 = 3.5L V6 Gas Engine EXM = 3.0L V6 Turbo Diesel Engine	DGZ = 5-Speed Auto W5A380 Transmission

Air Bag Modules, Impact Sensors and Clock Spring
Figure 10-215

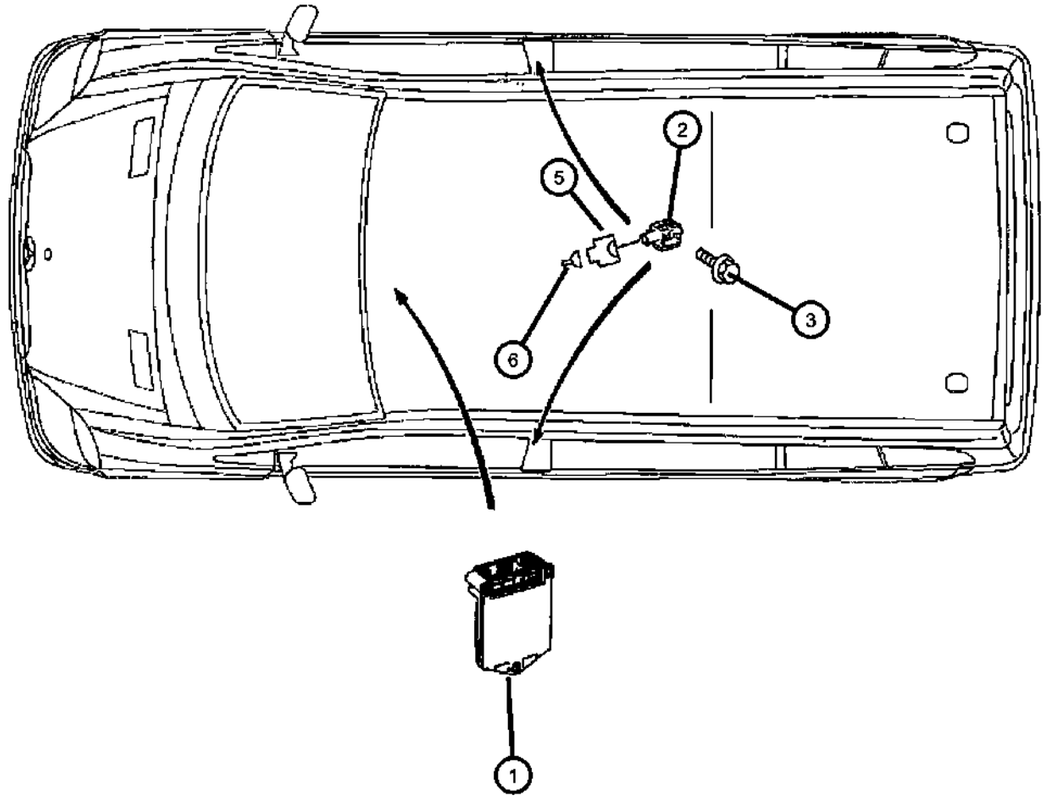

ITEM	PART NUMBER	QTY	LINE	SERIES	BODY	ENGINE	TRANS	TRIM	DESCRIPTION
1									MODULE, Air Bag Control
	68029750AA	1	2, 3, 6, 7	L					With Front, Side & Curtain Airbags / Without Auxilary Diesel Heater
	68029771AA	1	2, 3, 6, 7	L					Standard Front Drivers & Passenger Airbag Only
2	68013424AA	2	2, 3, 6, 7	L					SENSOR, Side Airbag Impact, Window & Thorax Air Bag Sensor
3									BOLT, Torx Head, M6x1.0x55.00
	06104188AA	2	2, 3, 6, 7	L	13, 15, 17, 53, 55				
		2	3, 7	L	03, 05				
-4	06104004AA	1	2, 3, 6, 7	L					BOLT, Control Unit To Floor [M6x12]
5	68011282AA	2	2, 3, 6, 7	L					CONNECTOR, Side Air Bag [2 Pin A53/A54]
6	05103874AA	1	2, 3, 6, 7	L					TERMINAL, [.75MM2; MQS; A53/A54]2
-7	05120860AA	1	2, 3, 6, 7	L					GASKET, [1.6 - 1.9 MM2 / A53/A54]

SPRINTER (VB)

SERIES	LINE	BODY	ENGINE	TRANSMISSION
L = LOWLINE	3 = HD DODGE 2WD 6 = Lt. Duty DODGE 4WD 2 = Med. Duty DODGE 2WD 7 = Med. Duty DODGE 4WD	17 = VAN WHEEL BASE 7 55 = WAGON WHEEL BASE 5 15 = VAN WHEEL BASE 5 53 = 119 WB 13 = 119 WB 05 = CAB CHASSIS WHEEL BASE 5 03 = CAB CHASSIS WHEEL BASE 3	EG2 = 3.5L V6 Gas Engine EXM = 3.0L V6 Turbo Diesel Engine	DGZ = 5-Speed Auto W5A380 Transmission

Air Bag Modules, Impact Sensors and Clock Spring
Figure 10-220

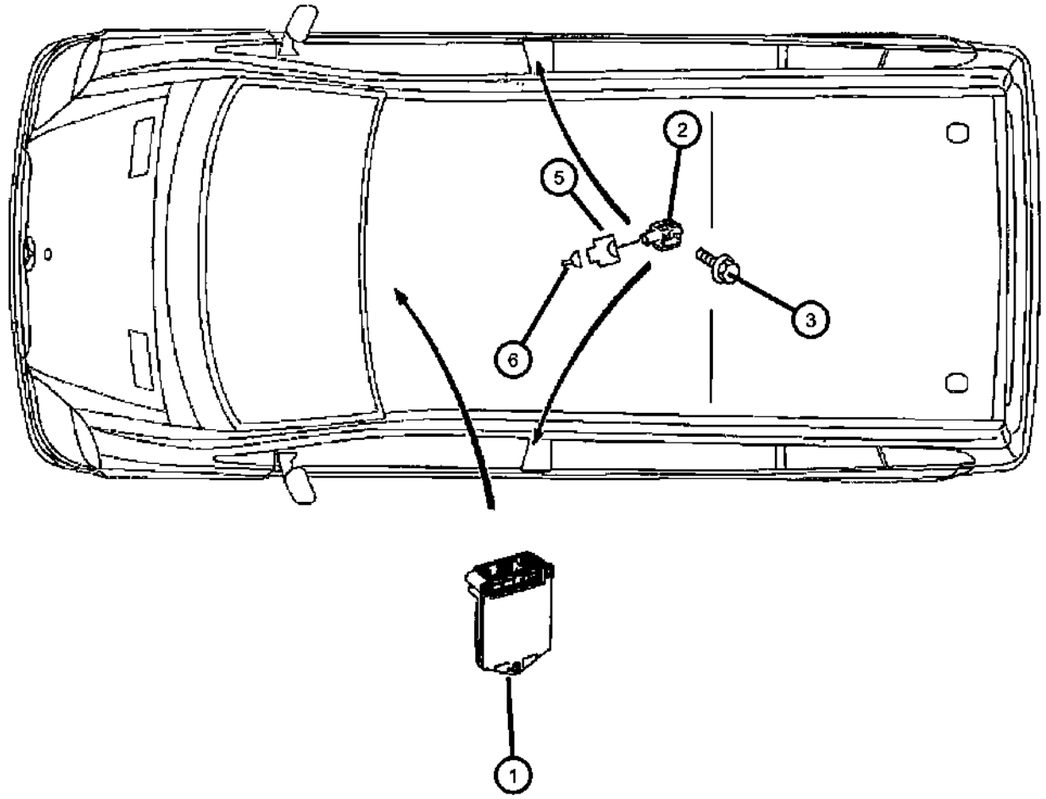

ITEM	PART NUMBER	QTY	LINE	SERIES	BODY	ENGINE	TRANS	TRIM	DESCRIPTION
1									MODULE, Air Bag Control
	68029750AA	1	2, 3, 6, 7	L					With Front, Side & Curtain Airbags / Without Auxilary Diesel Heater
	68029771AA	1	2, 3, 6, 7	L					Standard Front Drivers & Passenger Airbag Only
2	68013424AA	2	2, 3, 6, 7	L					SENSOR, Side Airbag Impact, Window & Thorax Air Bag Sensor
3									BOLT, Torx Head, M6x1.0x55.00
	06104188AA	2	3, 7	L	03, 05				
		2	2, 3, 6, 7	L	13, 15, 17, 53, 55				
-4	06104004AA	1	2, 3, 6, 7	L					BOLT, Control Unit To Floor [M6x12]
5	68011282AA	2	2, 3, 6, 7	L					CONNECTOR, Side Air Bag [2 Pin A53/A54]
6	05103874AA	1	2, 3, 6, 7	L					TERMINAL, [.75MM2; MQS; A53/A54]2
-7	05120860AA	1	2, 3, 6, 7	L					GASKET, [1.6 - 1.9 MM2 / A53/A54]

SPRINTER (VB)

SERIES	LINE	BODY	ENGINE	TRANSMISSION
L = LOWLINE	3 = HD DODGE 2WD 6 = Lt. Duty DODGE 4WD 2 = Med. Duty DODGE 2WD 7 = Med. Duty DODGE 4WD	17 = VAN WHEEL BASE 7 55 = WAGON WHEEL BASE 5 15 = VAN WHEEL BASE 5 53 = 119 WB 13 = 119 WB 05 = CAB CHASSIS WHEEL BASE 5 03 = CAB CHASSIS WHEEL BASE 3	EG2 = 3.5L V6 Gas Engine EXM = 3.0L V6 Turbo Diesel Engine	DGZ = 5-Speed Auto W5A380 Transmission

Air Bags Front
Figure 10-225

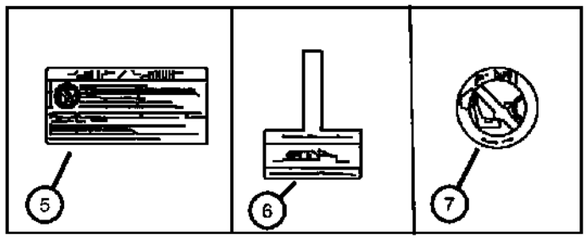

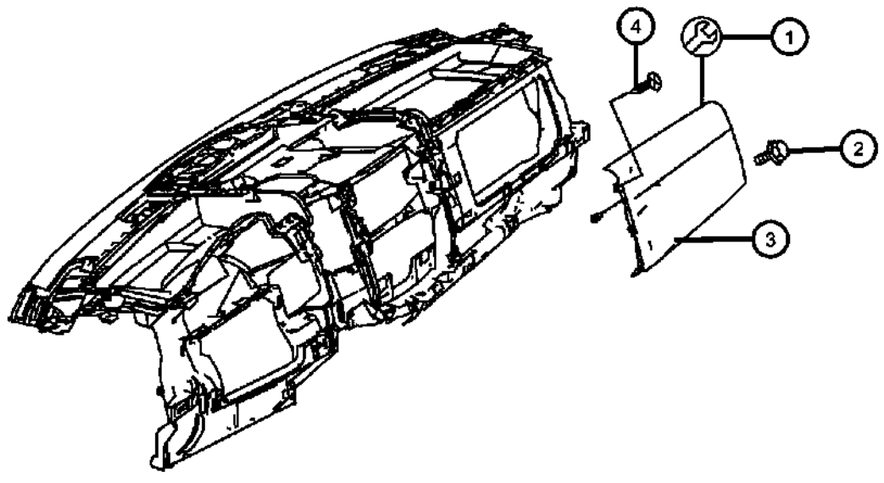

ITEM	PART NUMBER	QTY	LINE	SERIES	BODY	ENGINE	TRANS	TRIM	DESCRIPTION
1	68016726AA	2	2, 3, 6, 7	L					CONNECTOR, Wiring, Airbag,Passenger Side 2-PIN
2	68010411AA	4	2, 3, 6, 7	L					SCREW
3	68010410AA	1	2, 3, 6, 7	L					AIR BAG, Passenger
4	06104574AA	4	2, 3, 6, 7	L					SCREW, Tapping, 4.8x16
5	05096859AA	2	2, 3, 6, 7	L					LABEL, Air Bag Warning, German/English
6	05161821AA	1	2, 3, 6, 7	L					LABEL, Airbag, Stuck to Glove Compartment
7	05096894AA	1	2, 3, 6, 7	L					LABEL, Airbag

SPRINTER (VB)

SERIES	LINE	BODY	ENGINE	TRANSMISSION
L = LOWLINE	3 = HD DODGE 2WD 6 = Lt. Duty DODGE 4WD 2 = Med. Duty DODGE 2WD 7 = Med. Duty DODGE 4WD	17 = VAN WHEEL BASE 7 55 = WAGON WHEEL BASE 5 15 = VAN WHEEL BASE 5 53 = 119 WB 13 = 119 WB 05 = CAB CHASSIS WHEEL BASE 5 03 = CAB CHASSIS WHEEL BASE 3	EG2 = 3.5L V6 Gas Engine EXM = 3.0L V6 Turbo Diesel Engine	DGZ = 5-Speed Auto W5A380 Transmission

Window And Side Air Bag
Figure 10-230

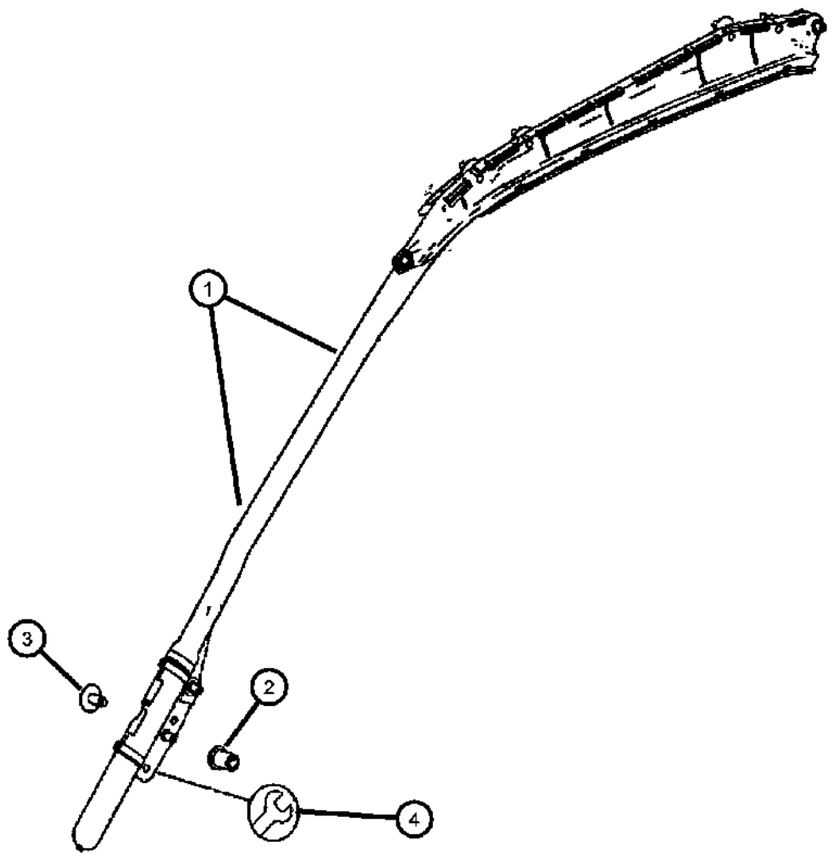

ITEM	PART NUMBER	QTY	LINE	SERIES	BODY	ENGINE	TRANS	TRIM	DESCRIPTION
1									AIR BAG, Side Curtain
	1HD69NC-VAA	1	2, 3, 6, 7	L				*A6	[A6], Left
		1	2, 3, 6, 7	L				*E7	[E7], Left
	1HD70NC-VAA	1	2, 3, 6, 7	L				*A6	[A6], Right
		1	2, 3, 6, 7	L				*E7	[E7], Right
		1	2, 3, 6, 7	L				*F7	[F7], Right
		1	3, 6, 7, 2	L				*F7	[F7], Left
2	05133486AA	4	2, 3, 6, 7	L					RIVET
3	68014337AA	8	2, 3, 6, 7	L					SCREW
4	68016751AA	2	2, 3, 6, 7	L					CONNECTORRight & Left

SPRINTER (VB)

SERIES	LINE	BODY	ENGINE	TRANSMISSION
L = LOWLINE	3 = HD DODGE 2WD 6 = Lt. Duty DODGE 4WD 2 = Med. Duty DODGE 2WD 7 = Med. Duty DODGE 4WD	17 = VAN WHEEL BASE 7 55 = WAGON WHEEL BASE 5 15 = VAN WHEEL BASE 5 53 = 119 WB 13 = 119 WB 05 = CAB CHASSIS WHEEL BASE 5 03 = CAB CHASSIS WHEEL BASE 3	EG2 = 3.5L V6 Gas Engine EXM = 3.0L V6 Turbo Diesel Engine	DGZ = 5-Speed Auto W5A380 Transmission

Seat Belts First Row
Figure 10-305

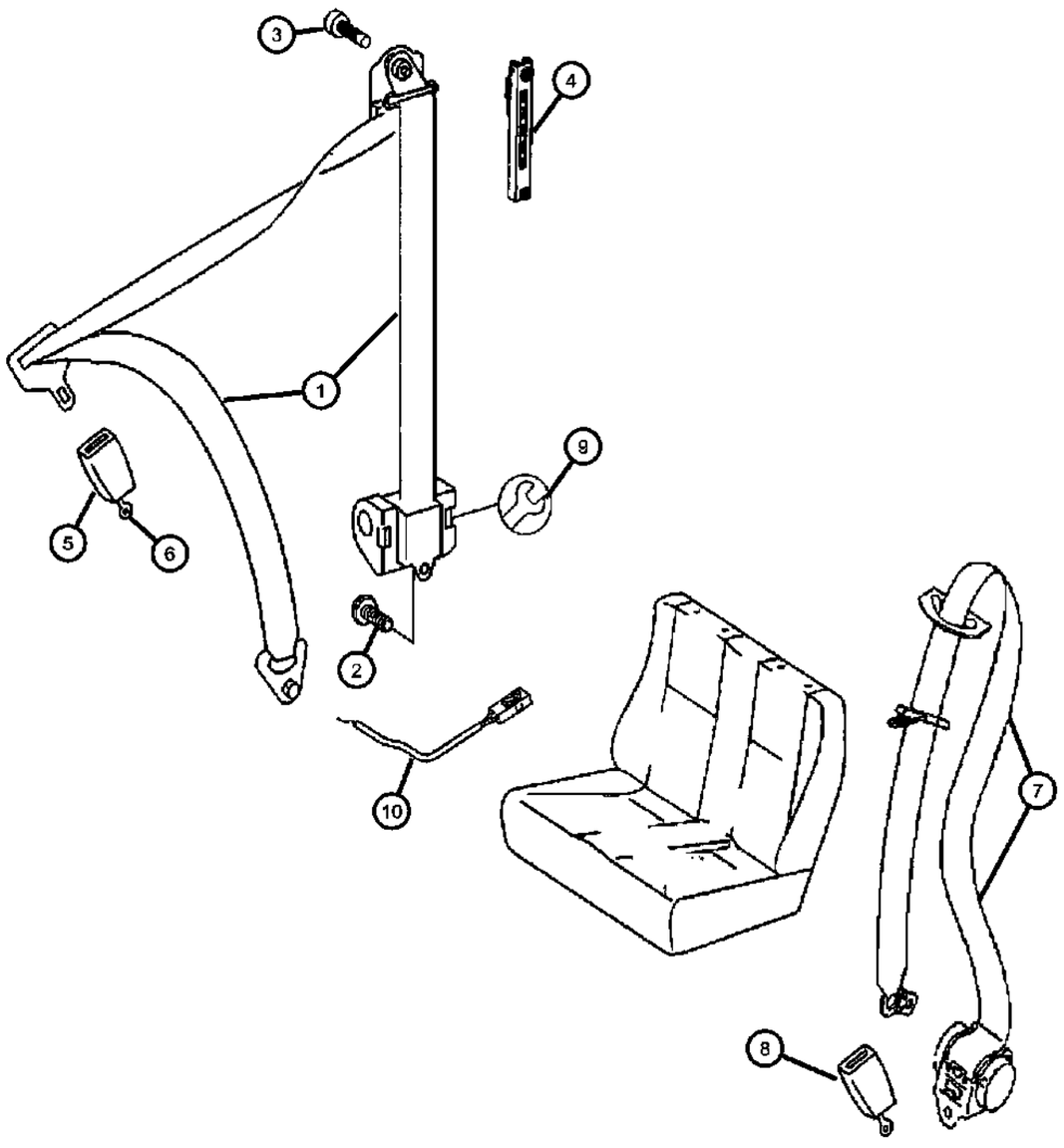

ITEM	PART NUMBER	QTY	LINE	SERIES	BODY	ENGINE	TRANS	TRIM	DESCRIPTION
1									SEAT BELT, Front Outer
	1HD71DX9AA	1	2, 3, 6, 7	L				*A6	Passenger Seat
		1	2, 3, 6, 7	L				*E7	Passenger Seat
		1	2, 3, 6, 7	L				*F7	Passenger Seat
	1HG34DX9AA	1	2, 3, 6, 7	L	13, 15, 17			*A6	With [CDT] Passenger Jump Seat, Right
		1	2, 3, 6, 7	L	13, 15, 17			*E7	With [CDT] Passenger Jump Seat, Right
		1	2, 3, 6, 7	L	13, 15, 17			*F7	With [CDT] Passenger Jump Seat, Right
	1HQ42DX9AA	1	2, 3, 6, 7	L					Driver Seat
	68005046AA	1	2, 3, 6, 7	L	13, 15, 17				With [CGQ] Orange, Right & Left
2	68017269AA	1	2, 3, 6, 7	L	03, 05, 13, 15, 17				SCREW
3	05097581AB	2	2, 3, 6, 7	L					SCREW
4	68017270AA	2	2, 3, 6, 7	L					ADJUSTER, Seat Belt Turning LoopRight & Left
5									SEAT BELT, Buckle Half
	68010831AA	1	2, 3, 6, 7	L					Driver side w/o Seat Belt Chime. Passenger side with seat adjusting, luxury, or suspensiom seat options, Passenger And Driver
	68010832AA	1	2, 3, 6, 7	L					Driver side with seat belt chime, Driver
6									SCREW, Mounting Bolt
	05073723AB	2	2, 3, 6, 7	L	13, 15, 17, 53, 55				
		1	3, 7	L	03, 05				
7									SEAT BELT, Front Outer, Dual Passenger Seat
	1HF08DX9AA	1	2, 3, 6, 7	L				*A6	[A6] With [CW9] Dual Passenger Seat
		1	2, 3, 6, 7	L				*E7	[E7] With [CW9] Dual Passenger Seat
		1	2, 3, 6, 7	L				*F7	[F7] With [CW9] Dual Passenger Seat
8									SEAT BELT, Buckle Half, Dual Passenger Seat
	05104502AA	2	2, 3, 6, 7	L	13, 15, 17, 53, 55				With [CW9] Dual Passenger Seat

SPRINTER (VB)

SERIES	LINE	BODY	ENGINE	TRANSMISSION
L = LOWLINE	3 = HD DODGE 2WD 6 = Lt. Duty DODGE 4WD 2 = Med. Duty DODGE 2WD 7 = Med. Duty DODGE 4WD	17 = VAN WHEEL BASE 7 55 = WAGON WHEEL BASE 5 15 = VAN WHEEL BASE 5 53 = 119 WB 13 = 119 WB 05 = CAB CHASSIS WHEEL BASE 5 03 = CAB CHASSIS WHEEL BASE 3	EG2 = 3.5L V6 Gas Engine EXM = 3.0L V6 Turbo Diesel Engine	DGZ = 5-Speed Auto W5A380 Transmission

Seat Belts First Row
Figure 10-305

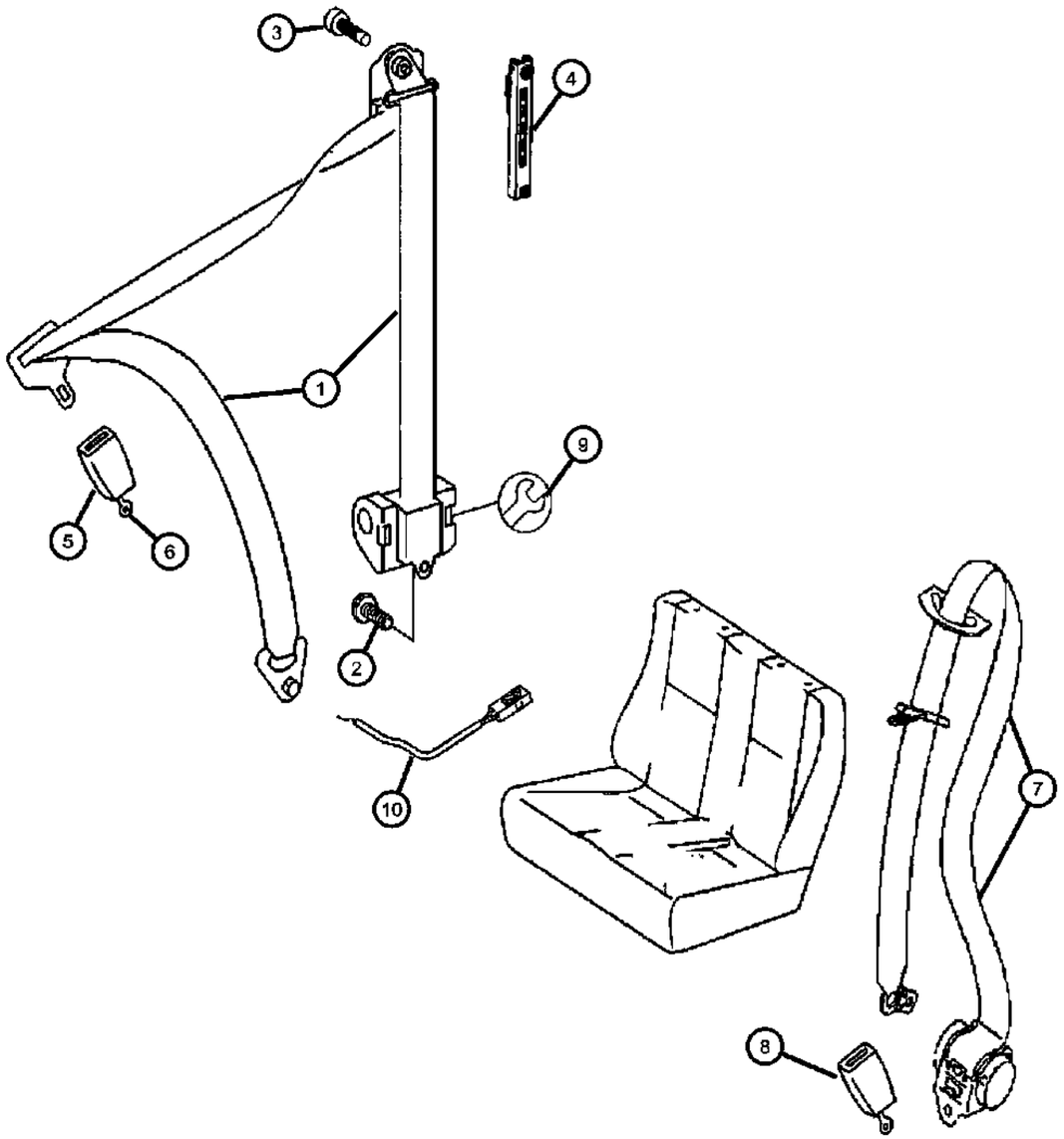

ITEM	PART NUMBER	QTY	LINE	SERIES	BODY	ENGINE	TRANS	TRIM	DESCRIPTION
		4	2, 3, 6, 7	L	53, 55				With [CW9] Dual Passenger Seat
9	68016726AA	2	2, 3, 6, 7	L					CONNECTOR, Wiring
10	68016749AA	1	2, 3, 6, 7	L					WIRING

SPRINTER (VB)

SERIES	LINE	BODY	ENGINE	TRANSMISSION
L = LOWLINE	3 = HD DODGE 2WD 6 = Lt. Duty DODGE 4WD 2 = Med. Duty DODGE 2WD 7 = Med. Duty DODGE 4WD	17 = VAN WHEEL BASE 7 55 = WAGON WHEEL BASE 5 15 = VAN WHEEL BASE 5 53 = 119 WB 13 = 119 WB 05 = CAB CHASSIS WHEEL BASE 5 03 = CAB CHASSIS WHEEL BASE 3	EG2 = 3.5L V6 Gas Engine EXM = 3.0L V6 Turbo Diesel Engine	DGZ = 5-Speed Auto W5A380 Transmission

Group - 11

Exhaust

Illustration Title — Group-Fig. No.

Exhaust System

Exhaust System ..... Fig. 11 - 105
Exhaust System ..... Fig. 11 - 106
Exhaust System ..... Fig. 11 - 107
Exhaust System ..... Fig. 11 - 110
Heat Shields ..... Fig. 11 - 120

011-100 Exhaust System 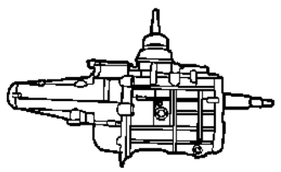			

Exhaust System
Figure 11-105

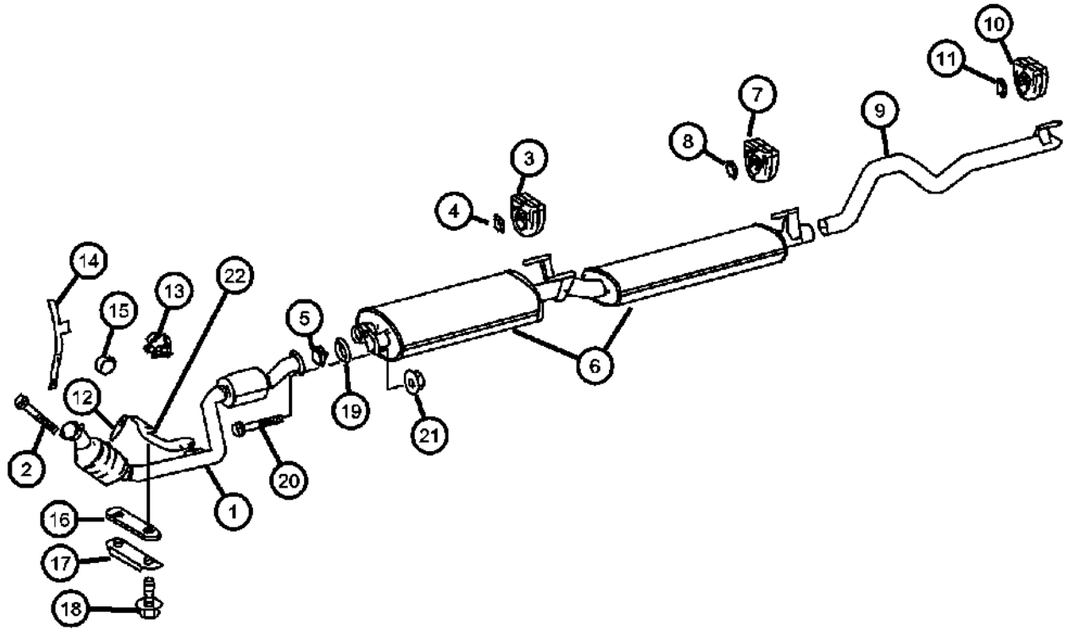

ITEM	PART NUMBER	QTY	LINE	SERIES	BODY	ENGINE	TRANS	TRIM	DESCRIPTION
1									EXHAUST
	68011980AA	1	2, 3, 6, 7	L		EG2	DGZ		Left
	68011987AA	1	2, 3, 6, 7	L		EG2	DGZ		Right
2	05096743AA	4	2, 6	L	13, 15, 17, 53, 55	EG2	DGZ		SCREW, Converter to Manifold, Exhaust To Exhaust Manifold
3	05104109AA	4	2, 6	L	13, 15, 17, 53, 55	EG2	DGZ		INSULATOR, Exhaust
4	05134656AA	2	2, 6	L	13, 15, 17, 53, 55	EG2	DGZ		BOLT, M8, Lock Nut
5									SEAL, Exhaust
	68012078AA	1	2, 3	L		EG2	DGZ		Muffler Intake, Left
	68028791AA	1	2, 3, 6, 7	L		EG2	DGZ		Muffler Intake, Right
6	68012005AA	1	2, 6	L	13, 15, 17, 53, 55	EG2	DGZ		MUFFLER, Exhaust
7	05104109AA	1	2, 6	L	13, 15, 17, 53, 55	EG2	DGZ		INSULATOR, Exhaust
8	05134656AA	1	2, 6	L	13, 15, 17, 53, 55	EG2	DGZ		BOLT, M8, Lock Nut
9									TAILPIPE, Exhaust
	68012013AA	1	2, 6	L	15, 17, 55	EG2	DGZ		
	68012016AA	1	2, 6	L	13, 53	EG2	DGZ		
10	05104109AA	1	2, 6	L	13, 15, 17, 53, 55	EG2	DGZ		INSULATOR, Exhaust
11	05134656AA	1	2, 6	L	13, 15, 17, 53, 55	EG2	DGZ		BOLT, M8, Lock Nut
12									SENSOR, Oxygen
	05135667AA	1	2, 6	L	13, 15, 17, 53, 55	EG2	DGZ		Up Stream, Left
	68012050AA	1	2, 3, 6, 7	L		EG2	DGZ		Up Stream, Right
	68012058AA	2	2, 3, 6, 7	L		EG2	DGZ		Downstream
13	68012056AA	4	2, 3, 6, 7	L		EG2	DGZ		CLAMP, Oxygen Sensor Clip
14									BRACKET
	68012059AA	1	2, 3, 6, 7	L		EG2	DGZ		Oxygen Sensor Bracket At Transmission, Left
	68012060AA	1	2, 3, 6, 7	L		EG2	DGZ		Oxygen Sensor Bracket At Transmission, Right
15	68011872AA	3	2, 3, 6, 7	L		EG2	DGZ		CLIP, Oxygen Sensor Clip
16	68012076AA	2	2, 3, 6, 7	L		EG2, EXM	DGZ		BRACKET, Base To Transmission

SPRINTER (VB)

SERIES	LINE	BODY	ENGINE	TRANSMISSION
L = LOWLINE	3 = HD DODGE 2WD 6 = Lt. Duty DODGE 4WD 2 = Med. Duty DODGE 2WD 7 = Med. Duty DODGE 4WD	17 = VAN WHEEL BASE 7 55 = WAGON WHEEL BASE 5 15 = VAN WHEEL BASE 5 53 = 119 WB 13 = 119 WB 05 = CAB CHASSIS WHEEL BASE 5 03 = CAB CHASSIS WHEEL BASE 3	EG2 = 3.5L V6 Gas Engine EXM = 3.0L V6 Turbo Diesel Engine	DGZ = 5-Speed Auto W5A380 Transmission

Exhaust System
Figure 11-105

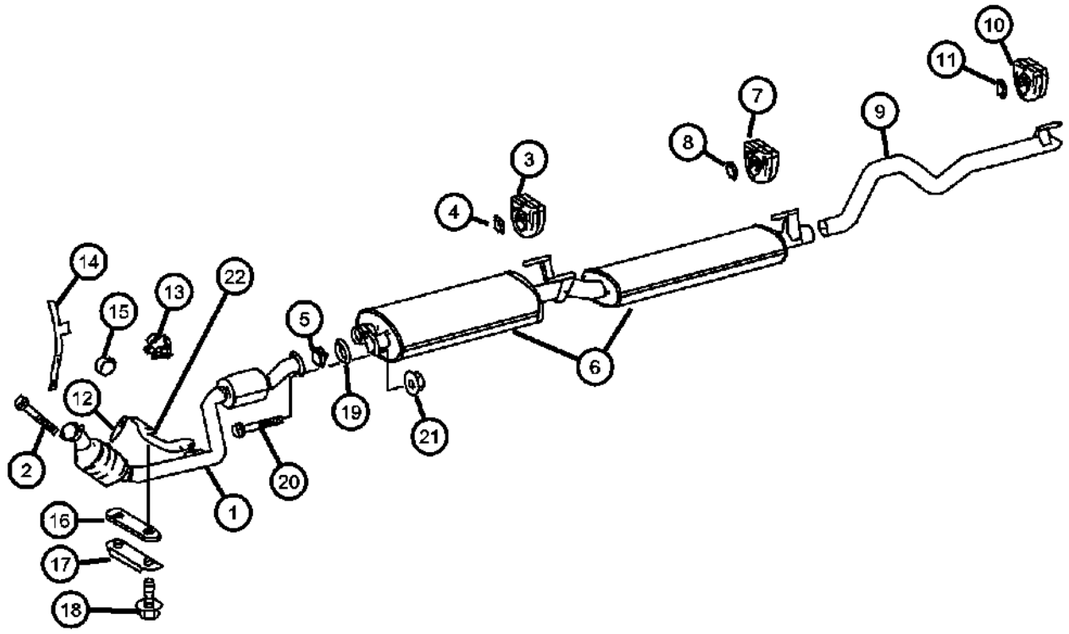

ITEM	PART NUMBER	QTY	LINE	SERIES	BODY	ENGINE	TRANS	TRIM	DESCRIPTION
17	68012077AA	1	2, 3, 6, 7	L		EG2, EXM	DGZ		BRACKET
18	06104025AA	2	2, 3, 6, 7	L		EG2	DGZ		BOLT, Hex Flange Head, M8x1.25x30
19	68012079AA	1	2, 3, 6, 7	L		EG2	DGZ		FLANGE, Exhaust Pipe
20	05125722AA	3	2, 3, 6, 7	L		EG2	DGZ		SCREW, SCREW, Flange To Exhaust Muffler
21	05126237AA	3	2, 3, 6, 7	L	03, 05, 13, 15, 17	EG2, EXM	DGZ		NUT, Hex, Flange To Exhaust Muffler
22									BRACKET
	68012082AA	1	2, 3, 6, 7	L		EG2	DGZ		Exhaust Pipe To Transmission, Left
	68012083AA	1	2, 3, 6, 7	L		EG2	DGZ		Exhaust Pipe To Transmission, Right

SPRINTER (VB)

SERIES	LINE	BODY	ENGINE	TRANSMISSION
L = LOWLINE	3 = HD DODGE 2WD 6 = Lt. Duty DODGE 4WD 2 = Med. Duty DODGE 2WD 7 = Med. Duty DODGE 4WD	17 = VAN WHEEL BASE 7 55 = WAGON WHEEL BASE 5 15 = VAN WHEEL BASE 5 53 = 119 WB 13 = 119 WB 05 = CAB CHASSIS WHEEL BASE 5 03 = CAB CHASSIS WHEEL BASE 3	EG2 = 3.5L V6 Gas Engine EXM = 3.0L V6 Turbo Diesel Engine	DGZ = 5-Speed Auto W5A380 Transmission

Exhaust System
Figure 11-106

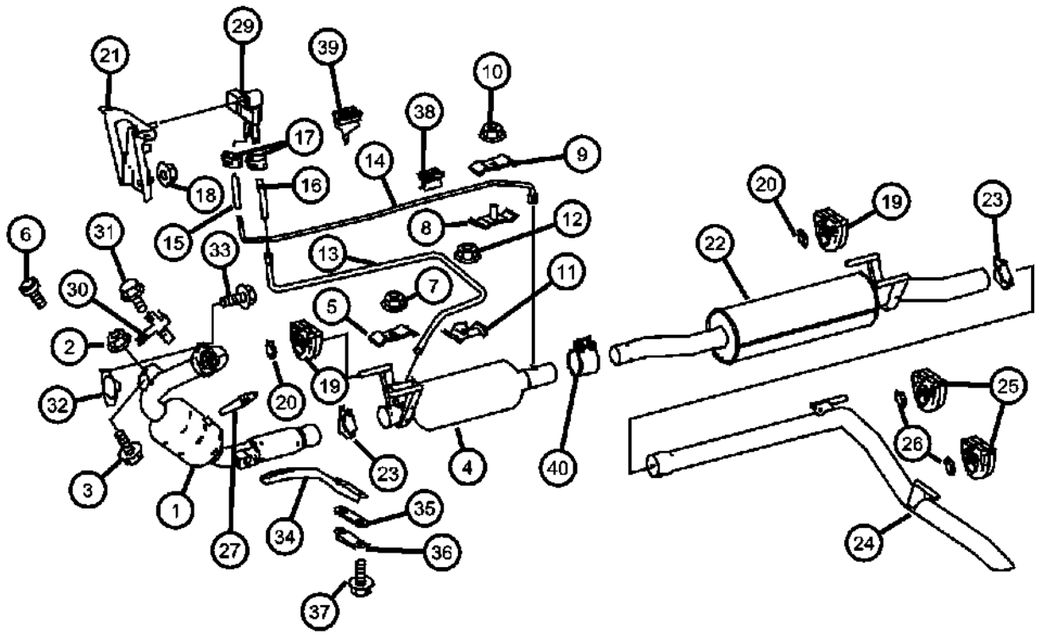

ITEM	PART NUMBER	QTY	LINE	SERIES	BODY	ENGINE	TRANS	TRIM	DESCRIPTION
1	68011935AA	1	2, 3, 6, 7	L	13, 15, 17, 53, 55	EXM	DGZ		EXHAUST
2	06104709AA	2	2, 3, 6, 7	L	13, 15, 17, 53, 55	EG2, EXM	DGZ		NUT, Hex Flange, M8x1.25, Exhaust To Cylinder Head
3	05073723AB	1	2, 3, 6, 7	L	13, 15, 17, 53, 55	EXM	DGZ		SCREW, Exhaust To Cylinder Head
4	68011959AA	1	2, 3, 6, 7	L		EXM	DGZ		FILTER ASSY, DIESEL PARTICULATE
5	68011970AA	2	2, 3, 6, 7	L	13, 15, 17, 53, 55	EXM	DGZ		BRACKET, Exhaust
6	06104005AA	3	2, 3, 6, 7	L	13, 15, 17, 53, 55	EXM	DGZ		BOLT, 6 Lobe External Head, M6X1.00X16.00, Bracket To Cylinder Head
7	68004878AA	2	2, 3, 6, 7	L	13, 15, 17, 53, 55	EG2, EXM	DGZ		NUT
8	68011971AA	1	2, 3, 6, 7	L		EXM	DGZ		BRACKET, Hose
9	68011970AA	2	2, 3, 6, 7	L	13, 15, 17, 53, 55	EXM	DGZ		BRACKET, Exhaust
10	68004878AA	2	2, 3, 6, 7	L	13, 15, 17, 53, 55	EG2, EXM	DGZ		NUT
11	68011972AA	1	2, 3, 6, 7	L		EXM	DGZ		BRACKET, Hose
12	68004878AA	2	2, 3, 6, 7	L	13, 15, 17, 53, 55	EG2, EXM	DGZ		NUT
13	68011973AA	1	2, 3, 6, 7	L		EXM	DGZ		HOSE, Delivery Line To Particulate Filter
14	68005200AA	1	2, 3, 6, 7	L		EXM	DGZ		HOSE, Delivery Line To Particulate Filter
15	68011975AA	1	2, 3, 6, 7	L		EXM	DGZ		HOSE
16	68011976AA	1	2, 3, 6, 7	L		EXM	DGZ		HOSE
17	05080439AB	2	2, 3, 6, 7	L	13, 15, 17, 53, 55	EXM	DGZ		CLAMP
18	68004878AA	2	2, 3, 6, 7	L	13, 15, 17, 53, 55	EG2, EXM	DGZ		NUT
19	05104109AA	4	3, 7	L	13, 15, 17, 53, 55	EXM	DGZ		INSULATOR, Exhaust
20	05134656AA	4	3, 7	L	13, 15, 17, 53, 55	EXM	DGZ		BOLT, M8, Lock Nut
21	68011977AA	1	2, 3, 6, 7	L	13, 15, 17, 53, 55	EXM	DGZ		BRACKET, Exhaust
22	68011993AA	1	2, 3, 6, 7	L	13, 15, 17, 53, 55	EXM	DGZ		MUFFLER, Exhaust
23	68012004AA	1	2, 3, 6, 7	L		EXM	DGZ		CLAMP
24									TAILPIPE, Exhaust

SPRINTER (VB)

SERIES	LINE	BODY	ENGINE	TRANSMISSION
L = LOWLINE	3 = HD DODGE 2WD 6 = Lt. Duty DODGE 4WD 2 = Med. Duty DODGE 2WD 7 = Med. Duty DODGE 4WD	17 = VAN WHEEL BASE 7 55 = WAGON WHEEL BASE 5 15 = VAN WHEEL BASE 5 53 = 119 WB 13 = 119 WB 05 = CAB CHASSIS WHEEL BASE 5 03 = CAB CHASSIS WHEEL BASE 3	EG2 = 3.5L V6 Gas Engine EXM = 3.0L V6 Turbo Diesel Engine	DGZ = 5-Speed Auto W5A380 Transmission

Exhaust System
Figure 11-106

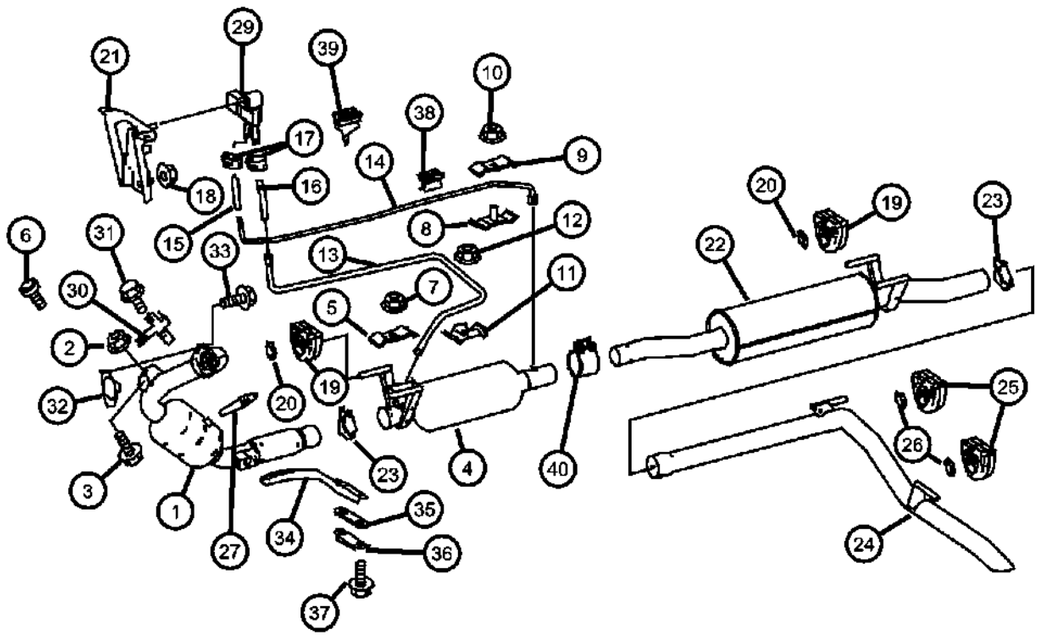

ITEM	PART NUMBER	QTY	LINE	SERIES	BODY	ENGINE	TRANS	TRIM	DESCRIPTION
	68012012AA	1	2, 6	L	15, 17, 55	EXM	DGZ		
	68012015AA	1	2, 6	L	13, 53	EXM	DGZ		
	68012018AA	1	3, 7	L	15	EXM	DGZ		
	68012022AA	1	3, 7	L	13	EXM	DGZ		
	68012024AA	1	3, 7	L	17	EXM	DGZ		
25	05104109AA	4	3, 7	L	13, 15, 17, 53, 55	EXM	DGZ		INSULATOR, Exhaust
26									BOLT, M8
	05134656AA	1	2, 3, 6, 7	L	13, 53	EXM	DGZ		Lock Nut
		2	2, 3, 6, 7	L	15, 17, 55	EXM	DGZ		Lock Nut
27	05135667AA	1	2, 3, 6, 7	L		EXM	DGZ		SENSOR, Oxygen, Upstream
-28									SENSOR, Temperature
	68012051AA	1	2, 3, 6, 7	L		EXM	DGZ		Diesel Oxidation Catalytic Converter
	68012052AA	1	2, 3, 6, 7	L		EXM	DGZ		
29	68012053AA	1	2, 3, 6, 7	L		EXM	DGZ		SENSOR, Pressure
30	68012057AA	1	2, 3, 6, 7	L		EXM	DGZ		BRACKET, Oxygen Sensor To Oil Pan
31	06104681AA	2	2, 3, 6, 7	L		EXM	DGZ		SCREW
32	68012070AA	1	2, 3, 6, 7	L		EXM	DGZ		SEAL
33	68012071AA	3	2, 3, 6, 7	L		EXM	DGZ		SCREW, From Turbocharger To Exhaust Muffler
34	68012072AA	1	2, 3, 6, 7	L		EXM	DGZ		BRACKET
35	68012076AA	2	2, 3, 6, 7	L		EG2, EXM	DGZ		BRACKET
36	68012077AA	1	2, 3, 6, 7	L		EG2, EXM	DGZ		BRACKET
37	06104025AA	2	2, 3, 6, 7	L		EXM	DGZ		BOLT, Hex Flange Head, M8x1.25x30
38	05159403AA	1	2, 3, 6, 7	L		EG2, EXM	DGZ		BRACKET
39	68013413AA	1	2, 3, 6, 7	L		EG2, EXM	DGZ		CLIP, Retainer
40									CLAMP, Exhaust
	68012081AA	1	2, 3, 6, 7	L	13, 15, 17, 53, 55	EXM	DGZ		
	68012084AA	1	2, 3, 6, 7	L		EXM	DGZ		

SPRINTER (VB)

SERIES	LINE	BODY	ENGINE	TRANSMISSION
L = LOWLINE	3 = HD DODGE 2WD 6 = Lt. Duty DODGE 4WD 2 = Med. Duty DODGE 2WD 7 = Med. Duty DODGE 4WD	17 = VAN WHEEL BASE 7 55 = WAGON WHEEL BASE 5 15 = VAN WHEEL BASE 5 53 = 119 WB 13 = 119 WB 05 = CAB CHASSIS WHEEL BASE 5 03 = CAB CHASSIS WHEEL BASE 3	EG2 = 3.5L V6 Gas Engine EXM = 3.0L V6 Turbo Diesel Engine	DGZ = 5-Speed Auto W5A380 Transmission

Exhaust System
Figure 11-107

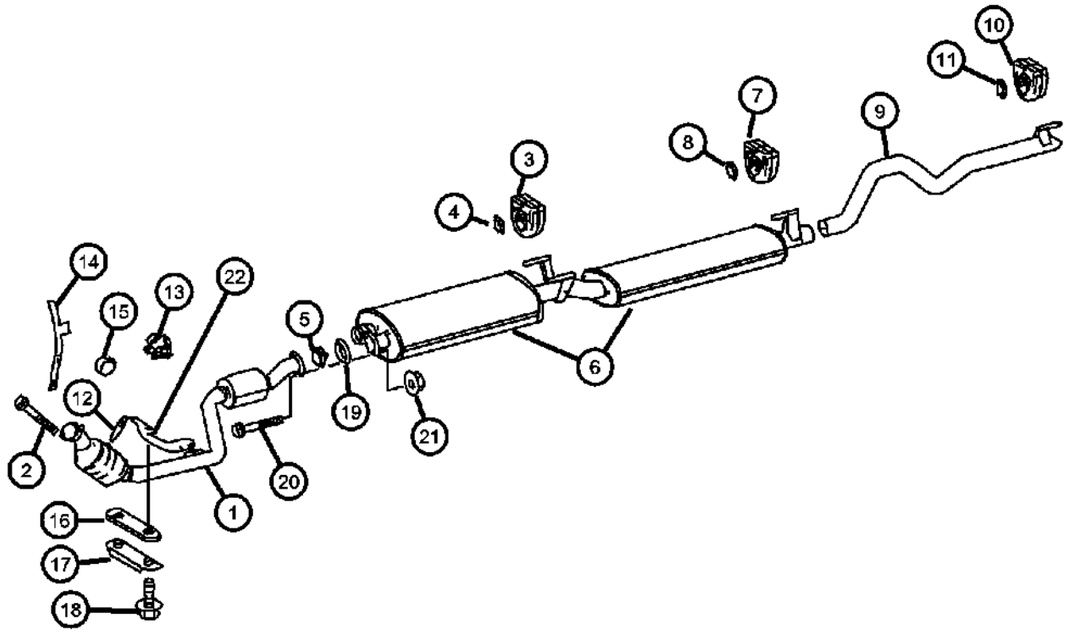

ITEM	PART NUMBER	QTY	LINE	SERIES	BODY	ENGINE	TRANS	TRIM	DESCRIPTION
1									EXHAUST
	68011980AA	1	2, 3, 6, 7	L		EG2	DGZ		Left
	68011987AA	1	2, 3, 6, 7	L		EG2	DGZ		Right
2	05096743AA	2	3, 7	L	03, 05	EG2	DGZ		SCREW, Converter to Manifold, Exhaust To Exhaust Manifold
3	05104109AA	4	3, 7	L	03, 05	EG2	DGZ		INSULATOR, Exhaust
4	05134656AA	2	3, 7	L	03, 05	EG2	DGZ		BOLT, M8, Lock Nut
5									SEAL, Exhaust
	68012078AA	1	2, 3	L		EG2	DGZ		Muffler Intake, Left
	68028791AA	1	2, 3, 6, 7	L		EG2	DGZ		Muffler Intake, Right
6	68012005AA	1	3, 7	L	03, 05	EG2	DGZ		MUFFLER, Exhaust
7	05104109AA	1	3, 7	L	03, 05	EG2	DGZ		INSULATOR, Exhaust
8	05134656AA	2	3, 7	L	03, 05	EG2	DGZ		BOLT, M8, Lock Nut
9	68029190AA	1	3	L	05	EG2	DGZ		TAILPIPE, Exhaust
10	05104109AA	1	3, 7	L	03, 05	EG2	DGZ		INSULATOR, Exhaust
11	05134656AA	2	3, 7	L	03, 05	EG2	DGZ		BOLT, M8
12									SENSOR, Oxygen
	68012050AA	1	2, 3, 6, 7	L		EG2	DGZ		Up Stream, Right
	68012058AA	2	2, 3, 6, 7	L		EG2	DGZ		Downstream,
13	68012056AA	4	2, 3, 6, 7	L		EG2	DGZ		CLAMP, Oxygen Sensor Clip
14									BRACKET
	68012059AA	1	2, 3, 6, 7	L		EG2	DGZ		Oxygen Sensor Bracket At Transmission, Left
	68012060AA	1	2, 3, 6, 7	L		EG2	DGZ		Oxygen Sensor Bracket At Transmission, Right
15	68011872AA	3	2, 3, 6, 7	L		EG2	DGZ		CLIP, Oxygen Sensor Clip
16	68012076AA	2	2, 3, 6, 7	L		EG2, EXM	DGZ		BRACKET, Base To Transmission
17	68012077AA	1	2, 3, 6, 7	L		EG2, EXM	DGZ		BRACKET
18	06104025AA	2	3, 7	L	03, 05	EG2, EXM	DGZ		BOLT, Hex Flange Head, M8x1.25x30
19	68012079AA	1	2, 3, 6, 7	L		EG2	DGZ		FLANGE, Exhaust Pipe
20	05125722AA	3	2, 3, 6, 7	L		EG2	DGZ		SCREW, SCREW, Flange To Exhaust Muffler
21	05126237AA	3	2, 3, 6, 7	L	03, 05, 13, 15, 17	EG2, EXM	DGZ		NUT, Hex, Flange To Exhaust Muffler
22									BRACKET

SPRINTER (VB)

SERIES	LINE	BODY	ENGINE	TRANSMISSION
L = LOWLINE	3 = HD DODGE 2WD 6 = Lt. Duty DODGE 4WD 2 = Med. Duty DODGE 2WD 7 = Med. Duty DODGE 4WD	17 = VAN WHEEL BASE 7 55 = WAGON WHEEL BASE 5 15 = VAN WHEEL BASE 5 53 = 119 WB 13 = 119 WB 05 = CAB CHASSIS WHEEL BASE 5 03 = CAB CHASSIS WHEEL BASE 3	EG2 = 3.5L V6 Gas Engine EXM = 3.0L V6 Turbo Diesel Engine	DGZ = 5-Speed Auto W5A380 Transmission

Exhaust System
Figure 11-107

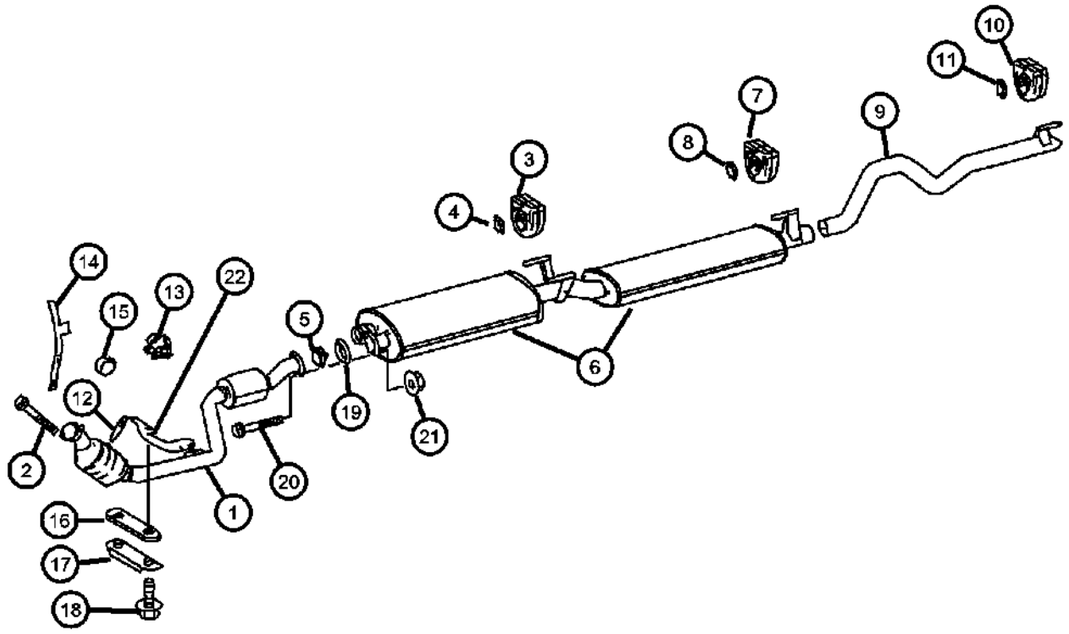

ITEM	PART NUMBER	QTY	LINE	SERIES	BODY	ENGINE	TRANS	TRIM	DESCRIPTION
	68012082AA	1	2, 3, 6, 7	L		EG2	DGZ		Exhaust Pipe To Transmission, Left
	68012083AA	1	2, 3, 6, 7	L		EG2	DGZ		Exhaust Pipe To Transmission, Right

SPRINTER (VB)

SERIES	LINE	BODY	ENGINE	TRANSMISSION
L = LOWLINE	3 = HD DODGE 2WD 6 = Lt. Duty DODGE 4WD 2 = Med. Duty DODGE 2WD 7 = Med. Duty DODGE 4WD	17 = VAN WHEEL BASE 7 55 = WAGON WHEEL BASE 5 15 = VAN WHEEL BASE 5 53 = 119 WB 13 = 119 WB 05 = CAB CHASSIS WHEEL BASE 5 03 = CAB CHASSIS WHEEL BASE 3	EG2 = 3.5L V6 Gas Engine EXM = 3.0L V6 Turbo Diesel Engine	DGZ = 5-Speed Auto W5A380 Transmission

AR = use ase required - = Non illustrrated part

<< RETURN TO GROUP INDEX

Exhaust System
Figure 11-110

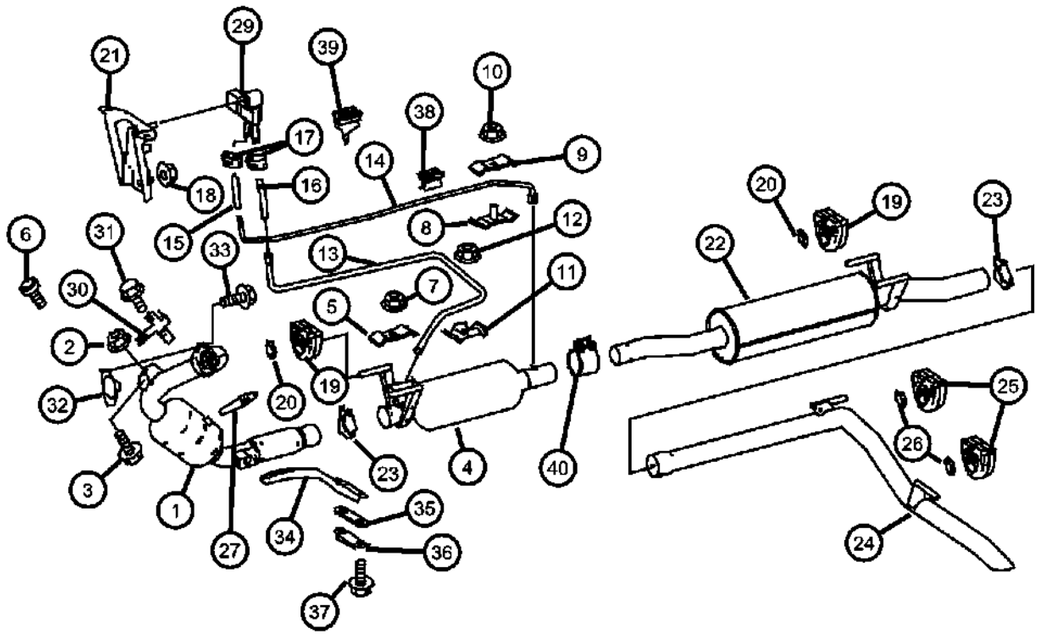

ITEM	PART NUMBER	QTY	LINE	SERIES	BODY	ENGINE	TRANS	TRIM	DESCRIPTION
1	68011935AA	1	3, 7	L	03, 05	EXM	DGZ		EXHAUST
2	06104709AA	1	3, 7	L	03, 05	EXM	DGZ		NUT, Hex Flange, M8x1.25, Exhaust To Cylinder Head
3	05073723AB	1	3, 7	L	03, 05	EXM	DGZ		SCREW, Exhaust To Cylinder Head
4	68011959AA	1	2, 3, 6, 7	L		EXM	DGZ		FILTER ASSY, DIESEL PARTICULATE
5	68011970AA	2	3, 7	L	03, 05	EXM	DGZ		BRACKET, Exhaust
6	06104005AA	1	3, 7	L	03, 05	EXM	DGZ		BOLT, 6 Lobe External Head, M6X1.00X16.00, Bracket To Cylinder Head
7	68004878AA	2	3, 7	L	03, 05	EG2, EXM	DGZ		NUT
8	68011971AA	1	2, 3, 6, 7	L		EXM	DGZ		BRACKET, Hose
9	68011970AA	2	3, 7	L	03, 05	EXM	DGZ		BRACKET, Exhaust
10	68004878AA	2	3, 7	L	03, 05	EG2, EXM	DGZ		NUT
11	68011972AA	1	2, 3, 6, 7	L		EXM	DGZ		BRACKET, Hose
12	68004878AA	2	3, 7	L	03, 05	EG2, EXM	DGZ		NUT
13	68011973AA	1	2, 3, 6, 7	L		EXM	DGZ		HOSE, Delivery Line To Particulate Filter
14	68005200AA	1	2, 3, 6, 7	L		EXM	DGZ		HOSE, Delivery Line To Particulate Filter
15	68011975AA	1	2, 3, 6, 7	L		EXM	DGZ		HOSE
16	68011976AA	1	2, 3, 6, 7	L		EXM	DGZ		HOSE
17	05080439AB	2	2, 3, 6, 7	L		EXM	DGZ		CLAMP
18	68004878AA	2	3, 7	L	03, 05	EG2, EXM	DGZ		NUT
19	05104109AA	4	3, 7	L	03, 05	EXM	DGZ		INSULATOR, Exhaust
20	05134656AA	4	3, 7	L	03, 05	EXM	DGZ		BOLT, M8
21	68011977AA	1	3, 7	L	03, 05	EXM	DGZ		BRACKET, Exhaust
22	68011993AA	1	3, 7	L	03, 05	EXM	DGZ		MUFFLER, Exhaust
23	68012004AA	1	2, 3, 6, 7	L		EXM	DGZ		CLAMP
24									TAILPIPE, Exhaust
	68012102AA	1	3, 7	L	03	EXM	DGZ		
	68029189AA	1	3, 7	L	05	EXM	DGZ		
25	05104109AA	4	3, 7	L	03, 05	EXM	DGZ		INSULATOR, Exhaust
26	05134656AA	4	3, 7	L	03, 05	EXM	DGZ		BOLT, M8
27	05135667AA	1	2, 3, 6, 7	L		EXM	DGZ		SENSOR, Oxygen, Upstream

SPRINTER (VB)

SERIES	LINE	BODY	ENGINE	TRANSMISSION
L = LOWLINE	3 = HD DODGE 2WD 6 = Lt. Duty DODGE 4WD 2 = Med. Duty DODGE 2WD 7 = Med. Duty DODGE 4WD	17 = VAN WHEEL BASE 7 55 = WAGON WHEEL BASE 5 15 = VAN WHEEL BASE 5 53 = 119 WB 13 = 119 WB 05 = CAB CHASSIS WHEEL BASE 5 03 = CAB CHASSIS WHEEL BASE 3	EG2 = 3.5L V6 Gas Engine EXM = 3.0L V6 Turbo Diesel Engine	DGZ = 5-Speed Auto W5A380 Transmission

AR = use ase required - = Non illustrrated part

<< RETURN TO GROUP INDEX

Exhaust System
Figure 11-110

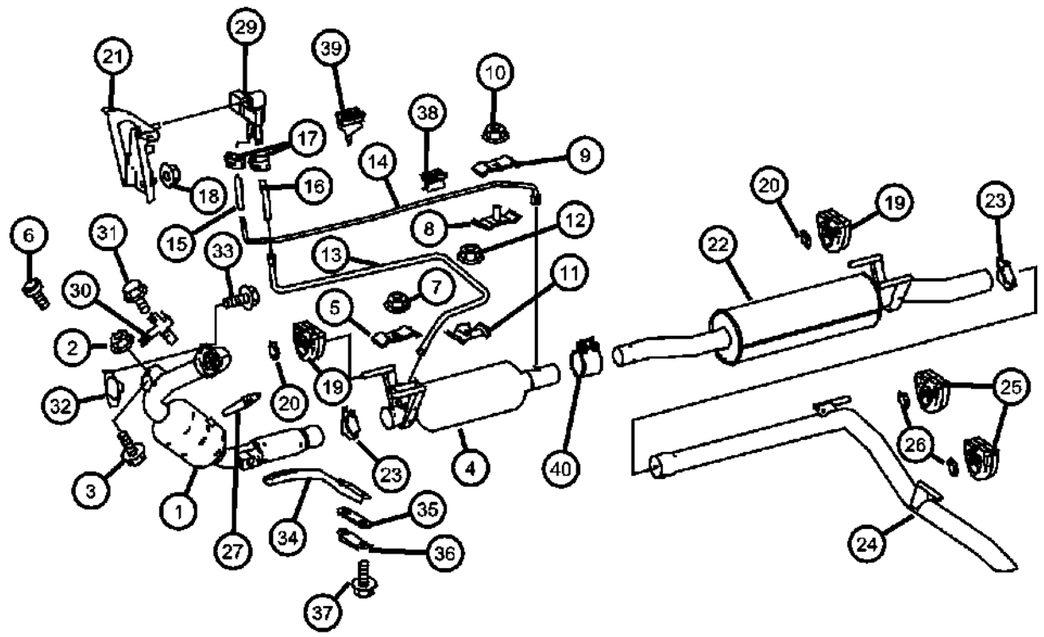

ITEM	PART NUMBER	QTY	LINE	SERIES	BODY	ENGINE	TRANS	TRIM	DESCRIPTION
-28									SENSOR, Temperature
	68012051AA	1	2, 3, 6, 7	L		EXM	DGZ		Diesel Oxidation Catalytic Converter
	68012052AA	1	2, 3, 6, 7	L		EXM	DGZ		
29	68012053AA	1	2, 3, 6, 7	L		EXM	DGZ		SENSOR, Pressure
30	68012057AA	1	2, 3, 6, 7	L		EXM	DGZ		BRACKET, Oxygen Sensor To Oil Pan
31	06104681AA	2	2, 3, 6, 7	L		EXM	DGZ		SCREW
32	68012070AA	1	2, 3, 6, 7	L		EXM	DGZ		SEAL
33	68012071AA	3	2, 3, 6, 7	L		EXM	DGZ		SCREW, From Turbocharger To Exhaust Muffler
34	68012072AA	1	2, 3, 6, 7	L		EXM	DGZ		BRACKET
35	68012076AA	2	2, 3, 6, 7	L		EG2, EXM	DGZ		BRACKET
36	68012077AA	1	2, 3, 6, 7	L		EG2, EXM	DGZ		BRACKET
37	06104025AA	2	2, 3, 6, 7	L		EXM	DGZ		BOLT, Hex Flange Head, M8x1.25x30
38	05159403AA	1	2, 3, 6, 7	L		EG2, EXM	DGZ		BRACKET
39	68013413AA	1	2, 3, 6, 7	L		EG2, EXM	DGZ		CLIP, Retainer
40									CLAMP, Exhaust
	68012081AA	1	3, 7	L	03, 05	EXM	DGZ		
	68012084AA	1	2, 3, 6, 7	L		EXM	DGZ		

SPRINTER (VB)

SERIES	LINE	BODY	ENGINE	TRANSMISSION
L = LOWLINE	3 = HD DODGE 2WD 6 = Lt. Duty DODGE 4WD 2 = Med. Duty DODGE 2WD 7 = Med. Duty DODGE 4WD	17 = VAN WHEEL BASE 7 55 = WAGON WHEEL BASE 5 15 = VAN WHEEL BASE 5 53 = 119 WB 13 = 119 WB 05 = CAB CHASSIS WHEEL BASE 5 03 = CAB CHASSIS WHEEL BASE 3	EG2 = 3.5L V6 Gas Engine EXM = 3.0L V6 Turbo Diesel Engine	DGZ = 5-Speed Auto W5A380 Transmission

Heat Shields
Figure 11-120

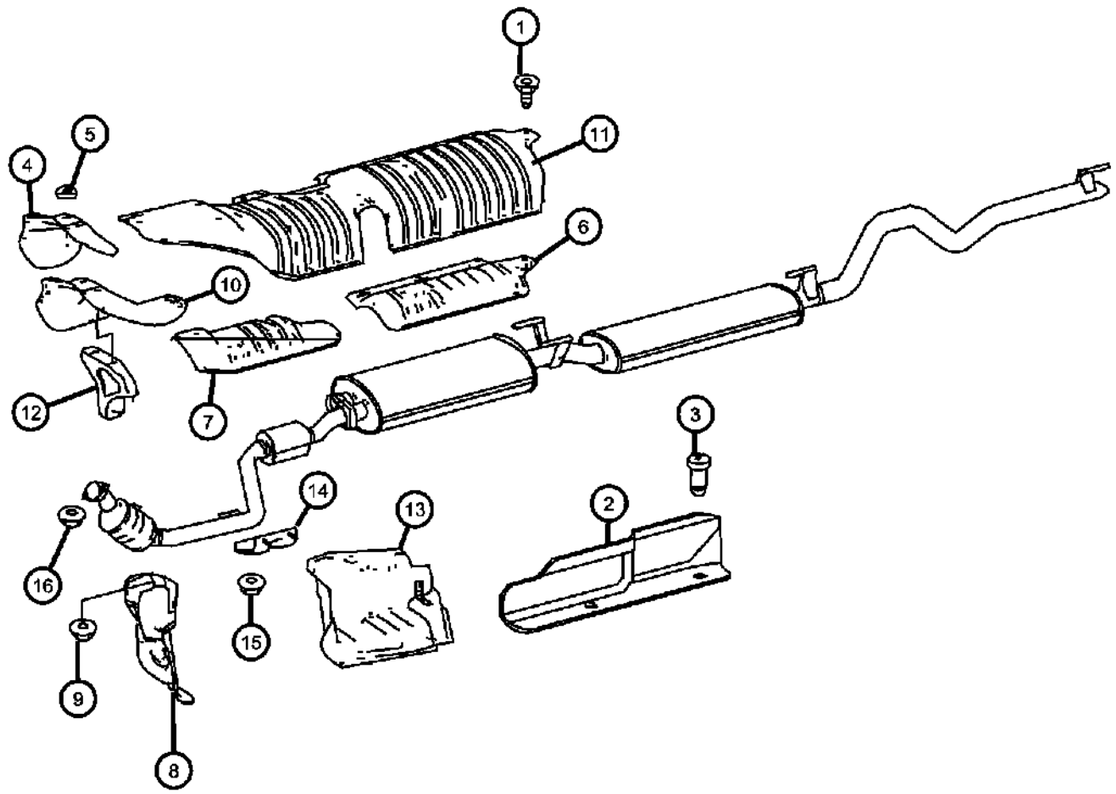

ITEM	PART NUMBER	QTY	LINE	SERIES	BODY	ENGINE	TRANS	TRIM	DESCRIPTION
1									SCREW
	06104681AA	1	2, 3, 6, 7	L		EG2	DGZ		
		1	2, 3, 6, 7	L		EXM	DGZ		
2	68004815AA	1	2, 3, 6, 7	L		EG2	DGZ		SHIELD, Heat
3	06104675AA	5	2, 3, 6, 7	L		EG2	DGZ		BOLT, Pan Head, M6.0X1.00X14.00
4	68012061AA	1	2, 3, 6, 7	L		EXM	DGZ		SHIELD, Heat
5	68004747AA	2	2, 3, 6, 7	L		EG2, EXM	DGZ		WASHER, Spring
6	68012062AA	1	2, 3, 6, 7	L		EXM	DGZ		SHIELD, Heat
7	68005202AA	1	2, 3, 6, 7	L		EXM	DGZ		SHIELD, Heat, Protective Plate Particulate Filter
8	68004744AA	1	2, 3, 6, 7	L		EXM	DGZ		PLATE, Protective Plate Fuel Tank
9									NUT
	68004878AA	2	3, 7	L	03, 05	EG2, EXM	DGZ		
		2	2, 3, 6, 7	L	13, 15, 17, 53, 55	EG2, EXM	DGZ		
10									SHIELD, Heat
	68012064AA	1	2, 3, 6, 7	L		EG2	DGZ		Right
	68012065AA	1	2, 3, 6, 7	L		EG2	DGZ		Left
11	68005203AA	1	2, 3, 6, 7	L		EG2	DGZ		SHIELD, Heat, Protective Plate Main Muffler
12	68012066AA	1	2, 3, 6, 7	L		EG2	DGZ		BRACKET, Heat Shield
13	68005204AA	1	2, 3, 6, 7	L		EG2	DGZ		SHIELD, Heat, Battery Protective Plate
14	68012067AA	1	2, 3, 6, 7	L		EG2	DGZ		BRACKET, Battery
15									NUT
	68004878AA	2	3, 7	L	03, 05	EG2, EXM	DGZ		
		2	2, 3, 6, 7	L	13, 15, 17, 53, 55	EG2, EXM	DGZ		
16	68012080AA	1	2, 3, 6, 7	L		EG2	DGZ		NUT

SPRINTER (VB)

SERIES	LINE	BODY	ENGINE	TRANSMISSION
L = LOWLINE	3 = HD DODGE 2WD 6 = Lt. Duty DODGE 4WD 2 = Med. Duty DODGE 2WD 7 = Med. Duty DODGE 4WD	17 = VAN WHEEL BASE 7 55 = WAGON WHEEL BASE 5 15 = VAN WHEEL BASE 5 53 = 119 WB 13 = 119 WB 05 = CAB CHASSIS WHEEL BASE 5 03 = CAB CHASSIS WHEEL BASE 3	EG2 = 3.5L V6 Gas Engine EXM = 3.0L V6 Turbo Diesel Engine	DGZ = 5-Speed Auto W5A380 Transmission

Group - 13

Frame, Bumper, and Fascia

Group - 13 Frame, Bumper, and Fascia

Illustration Title — Group-Fig. No.

Front Bumper and Fascia
Front Facia ..... Fig. 13 - 205

Rear Bumper and Fascia
Bumper, Rear ..... Fig. 13 - 340

Trailer Tow and Tow Hooks
Tow Hooks and Hitches, Rear ..... Fig. 13 - 520

Trailer
Trailer Hitch ..... Fig. 13 - 605

013-200 Front Bumper and Fascia	**013-300** Rear Bumper and Fascia 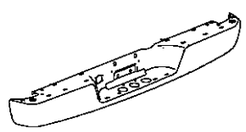	**013-500** Trailer Tow and Tow Hooks 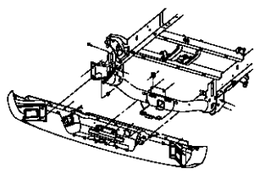	**013-600** Trailer

Front Facia
Figure 13-205

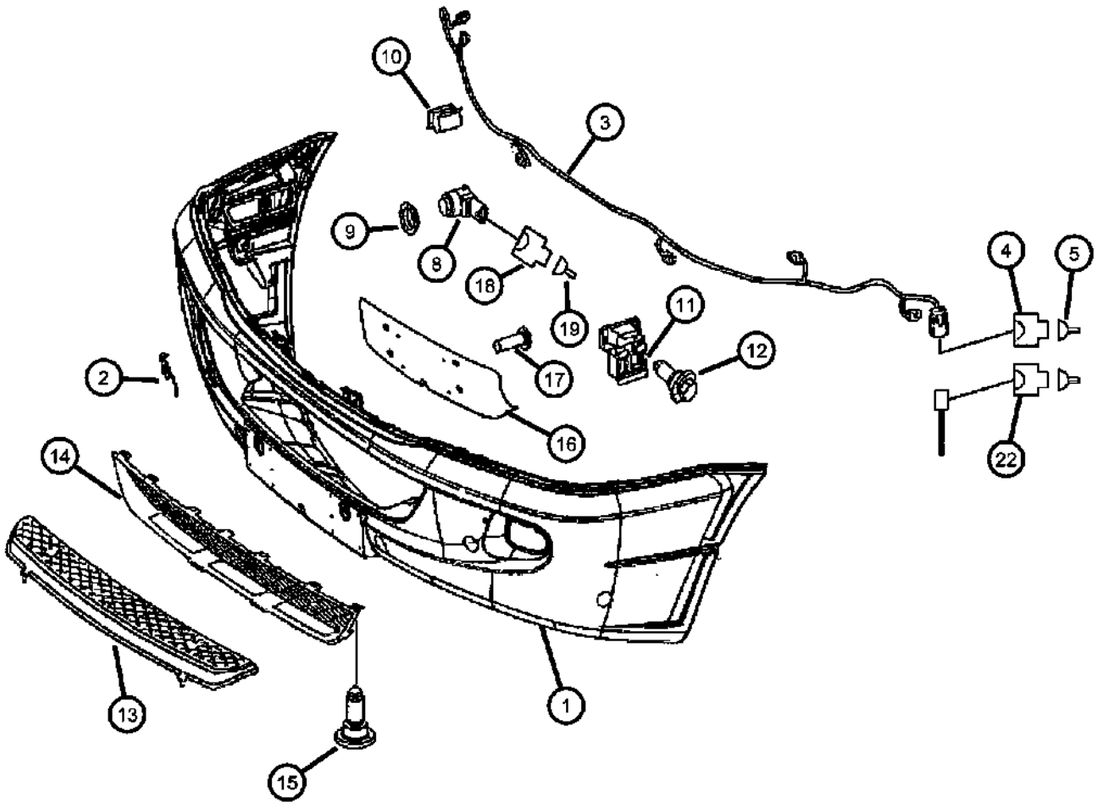

ITEM	PART NUMBER	QTY	LINE	SERIES	BODY	ENGINE	TRANS	TRIM	DESCRIPTION
1									FASCIA, Front
	1GY39P01AA	1	2, 3, 6, 7	L	13, 15, 17, 53, 55				White, With Parksense [XAG] and Fog Lamps [LNJ]
	1GY39XDVAA	1	2, 3, 6, 7	L	13, 15, 17, 53, 55				Gray, With Parksense [XAG] and Fog Lamps [LNJ]
	1GY40P01AA	1	2, 3, 6, 7	L					White, With Fog Lamps [LNJ] Without Parksense [XAG]
	1GY40XDVAA	1	2, 3, 6, 7	L					Gray, With Fog Lamps [LNJ] Without Parksense [XAG]
	1GY41P01AA	1	2, 3, 6, 7	L	13, 15, 17, 53, 55				White, With Parksense [XAG] Without Fog Lamps [LNJ]
	1GY41XDVAA	1	2, 3, 6, 7	L	13, 15, 17, 53, 55				Gray, With Parksense [XAG] Without Fog Lamps [LNJ]
	1VB09P01AA	1	2, 3, 6, 7	L					With [MC3]
	1VB09XDVAA	1	2, 3, 6, 7	L					Without [MC3]
2									COVER, Tow Eye
	1HQ50P01AA	1	2, 3, 6, 7	L					White
	1HQ50XD-VAA	1	2, 3, 6, 7	L					Gray
3	68010558AA	1	2, 3, 6, 7	L	13, 15, 17, 53, 55				WIRING, Parksense
4	68011283AA	1	2, 3, 6, 7	L					CONNECTOR
5	05133353AA	AR	2, 3, 6, 7	L					TERMINAL
-6	05103663AA	AR	2, 3, 6, 7	L					GROMMET
-7	05138038AA	1	2, 3, 6, 7	L					PLUG
8	68010557AA	6	2, 3, 6, 7	L	13, 15, 17, 53, 55				SENSOR, Park Assist
9	05120375AA	6	2, 3, 6, 7	L	13, 15, 17, 53, 55				SPACER, Sensor
10	68010560AA	6	2, 3, 6, 7	L	13, 15, 17, 53, 55				CLIP
11									BRACKET, Front Bumper
	68010550AA	1	3, 7	L	03, 05				Right
		1	2, 3, 6, 7	L	13, 15, 17, 53, 55				Right
	68010551AA	1	3, 7	L	03, 05				Left
		1	2, 3, 6, 7	L	13, 15, 17, 53, 55				Left
12									SCREW
	05103728AA	2	3, 7	L	03, 05				

SPRINTER (VB)

SERIES	LINE	BODY	ENGINE	TRANSMISSION
L = LOWLINE	3 = HD DODGE 2WD 6 = Lt. Duty DODGE 4WD 2 = Med. Duty DODGE 2WD 7 = Med. Duty DODGE 4WD	17 = VAN WHEEL BASE 7 55 = WAGON WHEEL BASE 5 15 = VAN WHEEL BASE 5 53 = 119 WB 13 = 119 WB 05 = CAB CHASSIS WHEEL BASE 5 03 = CAB CHASSIS WHEEL BASE 3	EG2 = 3.5L V6 Gas Engine EXM = 3.0L V6 Turbo Diesel Engine	DGZ = 5-Speed Auto W5A380 Transmission

AR = use ase required - = Non illustrrated part

<< RETURN TO GROUP INDEX

Front Facia
Figure 13-205

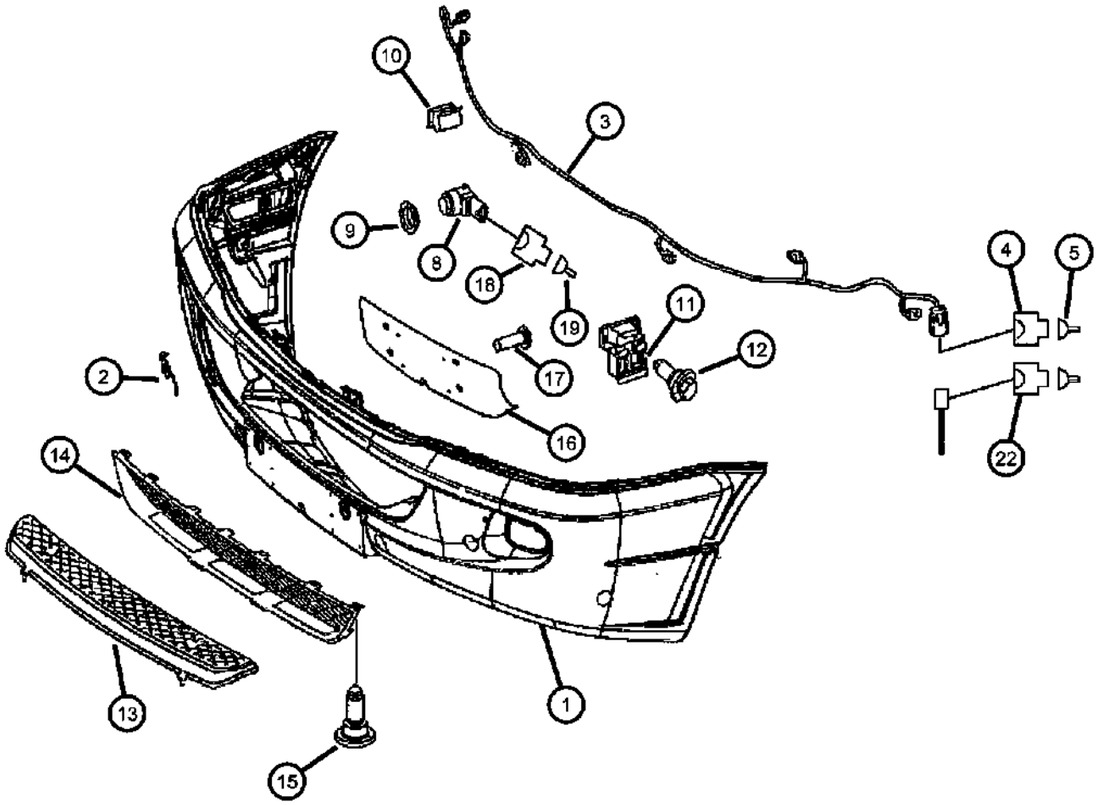

ITEM	PART NUMBER	QTY	LINE	SERIES	BODY	ENGINE	TRANS	TRIM	DESCRIPTION
		2	2, 3, 6, 7	L	13, 15, 17, 53, 55				
13	1HA76XDVAA	1	2, 3, 6, 7	L					PLATE
14	1HA77DX9AA	1	2, 3, 6, 7	L					GRILLE, Fascia
15									BOLT, Hex Head
	68010553AA	4	3, 7	L	03, 05				Side Guide At Front Module
		2	2, 3, 6, 7	L	13, 15, 17, 53, 55				Step Plate at Support
		4	2, 3, 6, 7	L	13, 15, 17, 53, 55				Side Guide At Front Module
		2	3, 7	L	03, 05				Step Plate at Support
16									BRACKET, License Plate
	68010554AA	1	3, 7	L	03, 05				
		1	2, 3, 6, 7	L	13, 15, 17, 53, 55				
17	68010555AA	4	2, 3, 6, 7	L					SCREW, License Plate Molding to Bumper
18	68011244AA	1	2, 3, 6, 7	L					CONNECTOR, Parksense Sensor
19	68011878AA	AR	2, 3, 6, 7	L					TERMINAL
-20	68011050AA	AR	2, 3, 6, 7	L					GASKET
-21	68011051AA	AR	2, 3, 6, 7	L					GASKET
22	68011377AA	1	2, 3, 6, 7	L					CONNECTOR

SPRINTER (VB)

SERIES	LINE	BODY	ENGINE	TRANSMISSION
L = LOWLINE	3 = HD DODGE 2WD 6 = Lt. Duty DODGE 4WD 2 = Med. Duty DODGE 2WD 7 = Med. Duty DODGE 4WD	17 = VAN WHEEL BASE 7 55 = WAGON WHEEL BASE 5 15 = VAN WHEEL BASE 5 53 = 119 WB 13 = 119 WB 05 = CAB CHASSIS WHEEL BASE 5 03 = CAB CHASSIS WHEEL BASE 3	EG2 = 3.5L V6 Gas Engine EXM = 3.0L V6 Turbo Diesel Engine	DGZ = 5-Speed Auto W5A380 Transmission

Bumper, Rear
Figure 13-340

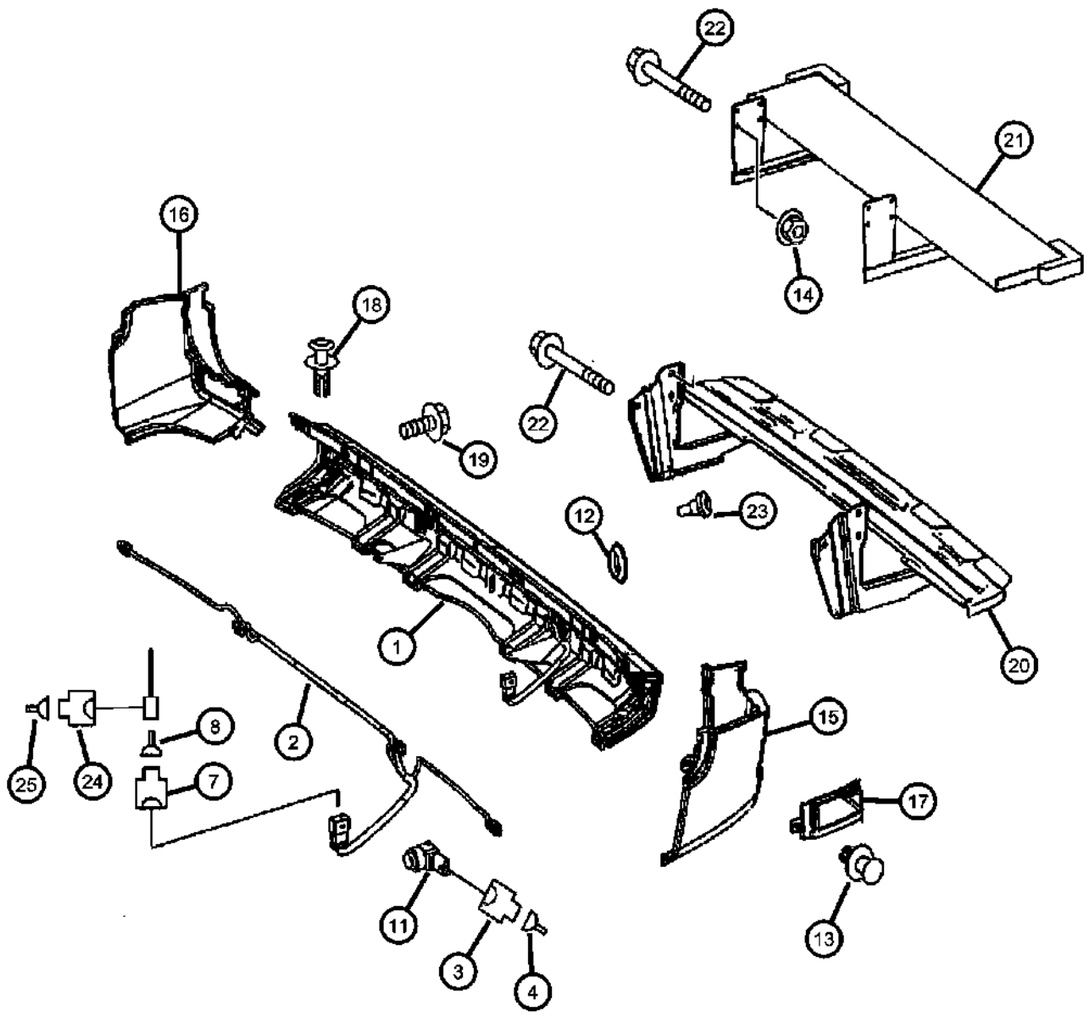

ITEM	PART NUMBER	QTY	LINE	SERIES	BODY	ENGINE	TRANS	TRIM	DESCRIPTION
1									FASCIA, Rear
	1HA78P01AA	1	2, 3, 6, 7	L	13, 15, 17, 53, 55				White, Without Parksense [XAG] or Step Pad [MBZ]
	1HA78XDVAA	1	2, 3, 6, 7	L	13, 15, 17, 53, 55				Gray, Without Parksense [XAG] or Step Pad [MBZ]
	1HA79XDVAA	1	2, 3, 6, 7	L	13, 15, 17, 53, 55				Gray, With Parksense [XAG] and Step Pad [MBZ]
	1HA80P01AA	1	2, 3, 6, 7	L	13, 15, 17, 53, 55				White, With Parksense [XAG] Without Step Pad [MBZ]
	1HA81XDVAA	1	2, 3, 6, 7	L	13, 15, 17, 53, 55				Gray, With Step Pad [MBZ], Without Parksense [XAG]
	1HA80XDVAA	1	2, 3, 6, 7	L	13, 15, 17, 53, 55				Gray, With Parksense [XAG] Without Step Pad [MBZ]
2									WIRING
	68010567AA	1	2, 3, 6, 7	L	13, 15, 17, 53, 55				With Parksense [XAG] Without Step Pad [MBZ]
	68010568AA	1	2, 3, 6, 7	L	13, 15, 17, 53, 55				With Parksense [XAG] and Step Pad [MBZ]
3	68011244AA	2	2, 3, 6, 7	L					CONNECTOR, Parksense
4	68013248AA	AR	2, 3, 6, 7	L					TERMINAL
-5	05161599AA	AR	2, 3, 6, 7	L					SEAL, Wiring
-6	05138031AA	1	2, 3, 6, 7	L					GASKET
7	68011283AA	1	2, 3, 6, 7	L					CONNECTOR
8	05133353AA	AR	2, 3, 6, 7	L					TERMINAL
-9	05103663AA	AR	2, 3, 6, 7	L					GROMMET
-10	05120865AA	1	2, 3, 6, 7	L					GASKET
11	68010557AA	4	2, 3, 6, 7	L	13, 15, 17, 53, 55				SENSOR, Park Assist
12	05120375AA	4	2, 3, 6, 7	L	13, 15, 17, 53, 55				SPACER, Sensor
13	1AR96DX9AA	3	2, 3, 6, 7	L	13, 15, 17, 53, 55				RIVET, Plastic
14	06105171AA	8	2, 3, 6, 7	L	13, 15, 17, 53, 55				NUT
15									COVER, Bumper
	1VB08XDVAA	1	2, 3, 6, 7	L					Gray, Left
	1VB08P01AA	1	2, 3, 6, 7	L					White, Left
16									COVER, Bumper
	1HA83P01AA	1	2, 3, 6, 7	L	13, 15, 17, 53, 55				White

SPRINTER (VB)

SERIES	LINE	BODY	ENGINE	TRANSMISSION
L = LOWLINE	3 = HD DODGE 2WD 6 = Lt. Duty DODGE 4WD 2 = Med. Duty DODGE 2WD 7 = Med. Duty DODGE 4WD	17 = VAN WHEEL BASE 7 55 = WAGON WHEEL BASE 5 15 = VAN WHEEL BASE 5 53 = 119 WB 13 = 119 WB 05 = CAB CHASSIS WHEEL BASE 5 03 = CAB CHASSIS WHEEL BASE 3	EG2 = 3.5L V6 Gas Engine EXM = 3.0L V6 Turbo Diesel Engine	DGZ = 5-Speed Auto W5A380 Transmission

AR = use ase required - = Non illustrrated part

<< RETURN TO GROUP INDEX

Bumper, Rear
Figure 13-340

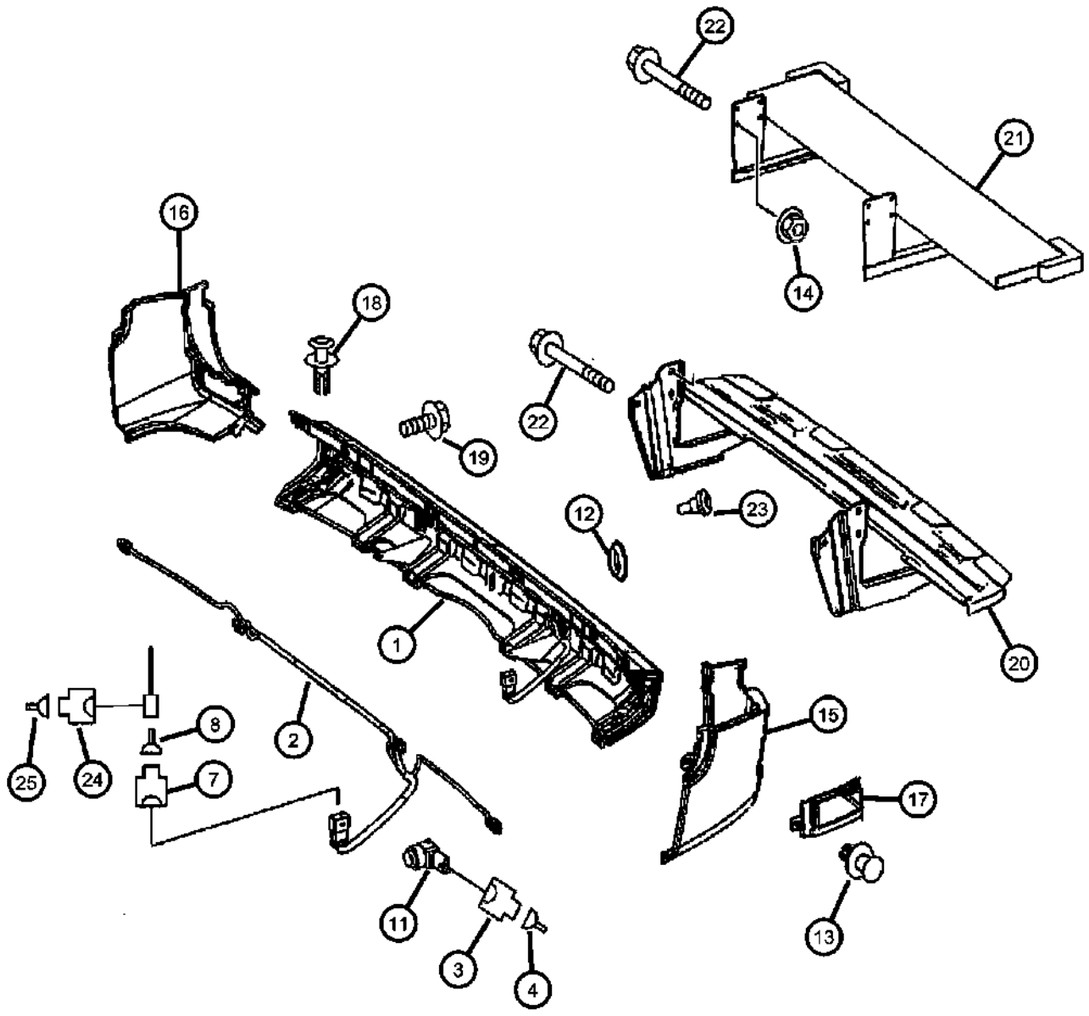

ITEM	PART NUMBER	QTY	LINE	SERIES	BODY	ENGINE	TRANS	TRIM	DESCRIPTION
	1HA83XDVAA	1	2, 3, 6, 7	L	13, 15, 17, 53, 55				Gray
17									FASCIA, Rear
	1HA82XDVAA	1	2, 3, 6, 7	L	13, 15, 17, 53, 55				Gray, Left
	1HA84P01AA	1	2, 3, 6, 7	L	13, 15, 17, 53, 55				White, Right
	1HA82P01AA	1	2, 3, 6, 7	L	13, 15, 17, 53, 55				White, Left
	1HA84XDVAA	1	2, 3, 6, 7	L	13, 15, 17, 53, 55				Gray, Right
18	1AR96DX9AA	1	2, 3, 6, 7	L	13, 15, 17, 53, 55				RIVET, Plastic, Cover to Body
19	1AR96DX9AA	1							SCREW, Hex Flange Head, (NOT SERVICED)
20									RUNNING BOARD, NONE, SPRINTER
	68012541AA	1	2, 6	L	13, 15, 17, 53, 55				
		1	3, 7	L	15, 17				
21	68012558AA	1	2, 3, 6, 7	L	13, 15, 17, 53, 55				RUNNING BOARD, NONE, SPRINTER, Higher Wide Metal Rear Step [MKK]
22	06104245AA	6	2, 3, 6, 7	L	13, 15, 17, 53, 55				SCREW, Step to Side Member
23	68010571AA	7	2, 3, 6, 7	L					SCREW
24	68011377AA	1	2, 3, 6, 7	L					CONNECTOR, Parksense
25	68011882AA	AR	2, 3, 6, 7	L					TERMINAL
-26	05103663AA	AR	2, 3, 6, 7	L					GROMMET
-27	05120865AA	1	2, 3, 6, 7	L					GASKET

SPRINTER (VB)

SERIES	LINE	BODY	ENGINE	TRANSMISSION
L = LOWLINE	3 = HD DODGE 2WD 6 = Lt. Duty DODGE 4WD 2 = Med. Duty DODGE 2WD 7 = Med. Duty DODGE 4WD	17 = VAN WHEEL BASE 7 55 = WAGON WHEEL BASE 5 15 = VAN WHEEL BASE 5 53 = 119 WB 13 = 119 WB 05 = CAB CHASSIS WHEEL BASE 5 03 = CAB CHASSIS WHEEL BASE 3	EG2 = 3.5L V6 Gas Engine EXM = 3.0L V6 Turbo Diesel Engine	DGZ = 5-Speed Auto W5A380 Transmission

Tow Hooks and Hitches, Rear
Figure 13-520

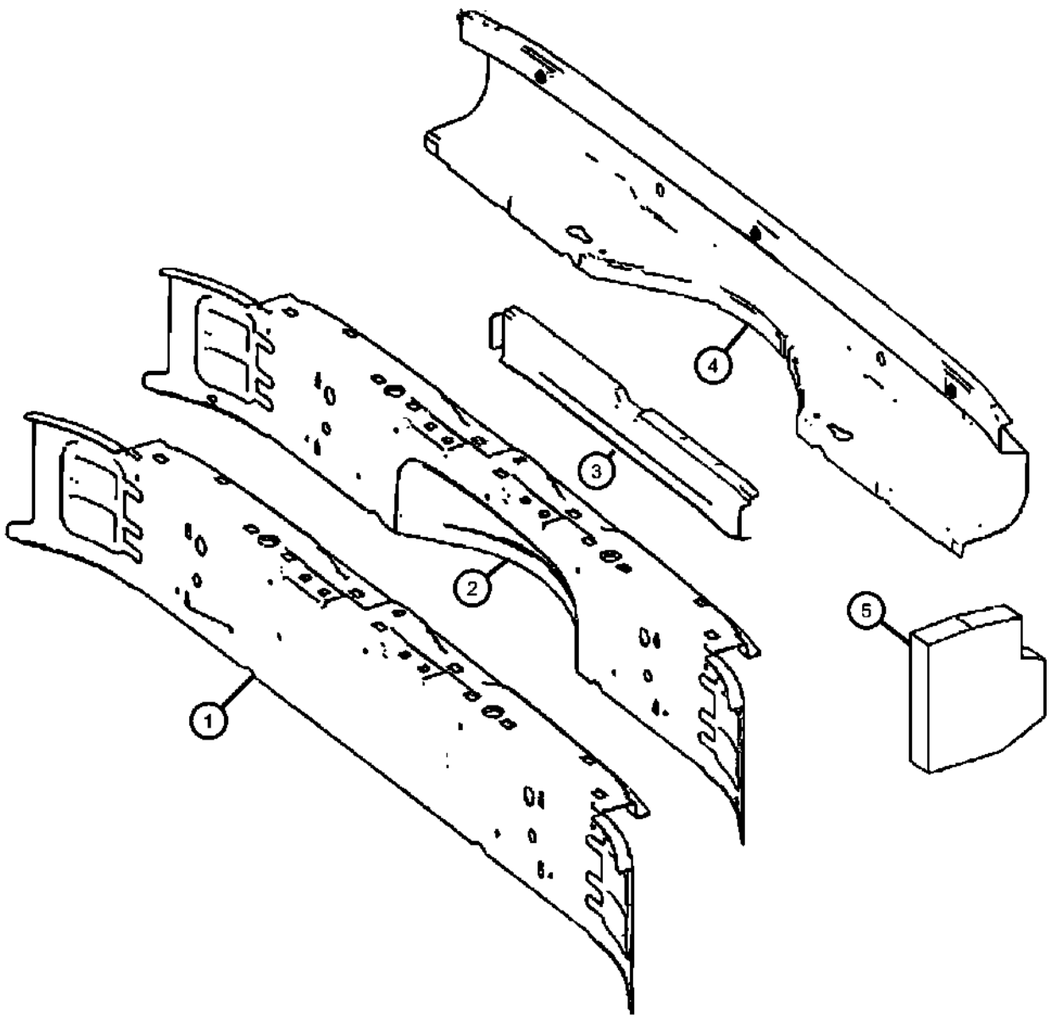

ITEM	PART NUMBER	QTY	LINE	SERIES	BODY	ENGINE	TRANS	TRIM	DESCRIPTION
1	68007838AA	2	3, 7	L	13, 15, 17, 53, 55				REINFORCEMENT, Bumper
2	68007822AA	1	2, 3, 6, 7	L	13, 15, 17, 53, 55				REINFORCEMENT, Rear Bumper
3	68007838AA	2	3, 7	L	13, 15, 17, 53, 55				REINFORCEMENT, Bumper
4	68007833AA	1	2, 3, 6, 7	L	13, 15, 17, 53, 55				REINFORCEMENT, Rear Bumper
5	68007831AA	2	2, 3, 6, 7	L	13, 15, 17, 53, 55				SEAL

SPRINTER (VB)

SERIES	LINE	BODY	ENGINE	TRANSMISSION
L = LOWLINE	3 = HD DODGE 2WD 6 = Lt. Duty DODGE 4WD 2 = Med. Duty DODGE 2WD 7 = Med. Duty DODGE 4WD	17 = VAN WHEEL BASE 7 55 = WAGON WHEEL BASE 5 15 = VAN WHEEL BASE 5 53 = 119 WB 13 = 119 WB 05 = CAB CHASSIS WHEEL BASE 5 03 = CAB CHASSIS WHEEL BASE 3	EG2 = 3.5L V6 Gas Engine EXM = 3.0L V6 Turbo Diesel Engine	DGZ = 5-Speed Auto W5A380 Transmission

Trailer Hitch
Figure 13-605

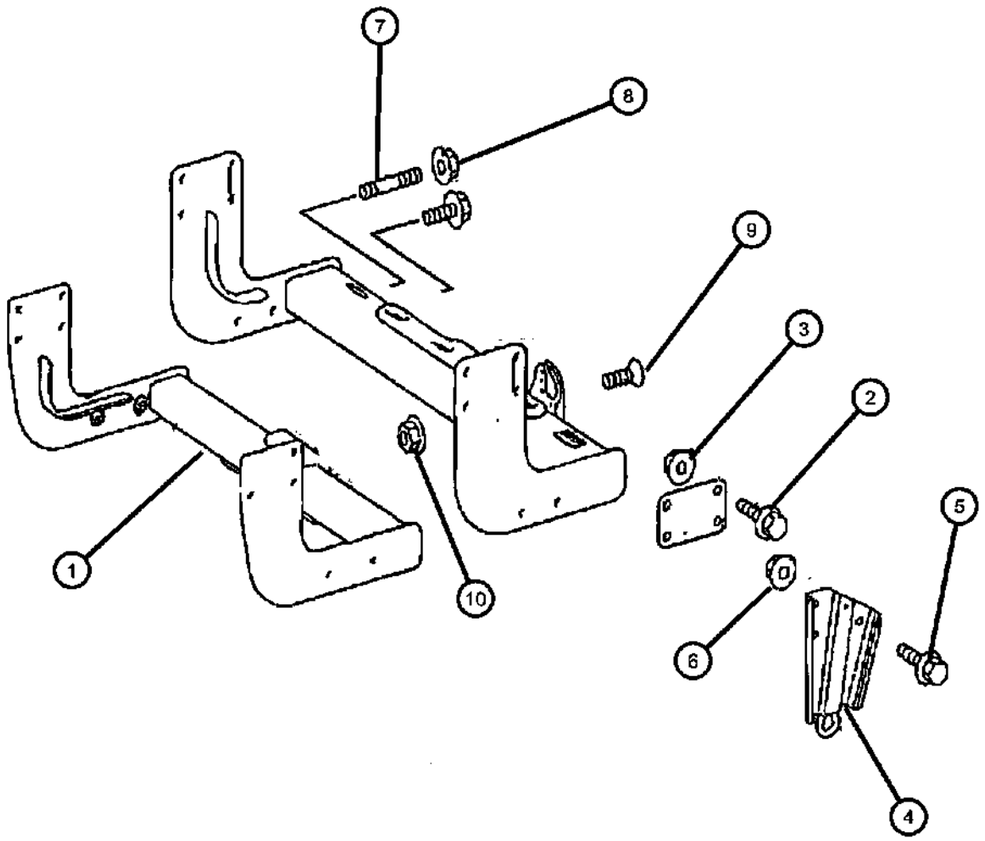

ITEM	PART NUMBER	QTY	LINE	SERIES	BODY	ENGINE	TRANS	TRIM	DESCRIPTION
Note: Parts shown in illustration without reference numbers are not serviced at this time.									
1									HITCH, Trailer
	68012499AA	1	2, 6	L					
	68012505AA	1	3, 7	L	13				
	68012569AA	1	3, 7	L	03, 05				
2									SCREW
	06104245AA	8	2, 3, 6, 7	L	13, 15, 17, 53, 55				
		8	3, 7	L	03, 05				
3									NUT
	06105171AA	8	2, 3, 6, 7	L	13, 15, 17, 53, 55				
		8	3, 7	L	03, 05				
4	68012511AA	2	2, 3, 6, 7	L					HOOK, Tow
5	06104245AA	3	2, 3, 6, 7	L	13, 15, 17, 53, 55				SCREW
6	06105171AA	3	2, 3, 6, 7	L	13, 15, 17, 53, 55				NUT
7									SCREW
	05128448AA	1	3, 7	L	15, 17				
		1	2, 6	L					
8	06105170AA	4	3, 7	L	03, 05				NUT
9									SCREW
	05125745AA	1	3, 7	L	15, 17				
		1	2, 6	L					
10	06105170AA	2	2, 3, 6, 7	L					NUT

SPRINTER (VB)

SERIES	LINE	BODY	ENGINE	TRANSMISSION
L = LOWLINE	3 = HD DODGE 2WD 6 = Lt. Duty DODGE 4WD 2 = Med. Duty DODGE 2WD 7 = Med. Duty DODGE 4WD	17 = VAN WHEEL BASE 7 55 = WAGON WHEEL BASE 5 15 = VAN WHEEL BASE 5 53 = 119 WB 13 = 119 WB 05 = CAB CHASSIS WHEEL BASE 5 03 = CAB CHASSIS WHEEL BASE 3	EG2 = 3.5L V6 Gas Engine EXM = 3.0L V6 Turbo Diesel Engine	DGZ = 5-Speed Auto W5A380 Transmission

Group - 14

Fuel

014-100 Fuel Tank 	**014-1000** Accelerator Pedal 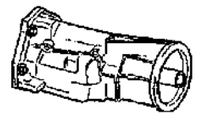	**014-200** Fuel Tank Filler Tube 	**014-300** Fuel Lines 
014-400 Fuel Rail and Injectors 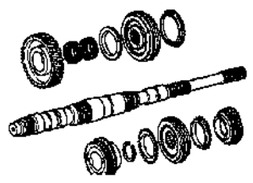	**014-500** Fuel Pump and Sending Unit 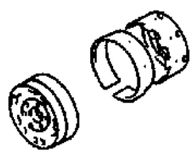	**014-600** Throttle Body 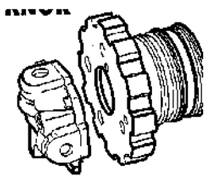	**014-800** Air Cleaner 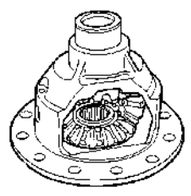

Group - 14 Fuel

Illustration Title — Group-Fig. No.

Fuel Tank
Fuel Tank & Related Parts....Fig. 14 - 105

Fuel Tank Filler Tube
Fuel Filler Tube and Related....Fig. 14 - 205

Fuel Lines
Fuel Lines and Related....Fig. 14 - 305
Fuel Lines and Related....Fig. 14 - 310
Fuel Lines and Related....Fig. 14 - 315
Fuel Lines and Related....Fig. 14 - 320
Fuel Lines and Related....Fig. 14 - 321

Fuel Rail and Injectors
Fuel Rail and Related....Fig. 14 - 405
Fuel Rail and Injectors Diesel Engines....Fig. 14 - 420

Fuel Pump and Sending Unit
Fuel Pump Module....Fig. 14 - 505
Fuel Pump Module....Fig. 14 - 510
Fuel Injection Pump and Related....Fig. 14 - 520
Fuel Injection Pump and Related....Fig. 14 - 525

Throttle Body
Throttle Body....Fig. 14 - 601
Throttle Body....Fig. 14 - 602

Air Cleaner
Air Cleaner and Related....Fig. 14 - 805

Accelerator Pedal
Accelerator Pedal and Related....Fig. 14 - 1005

Fuel Tank & Related Parts
Figure 14-105

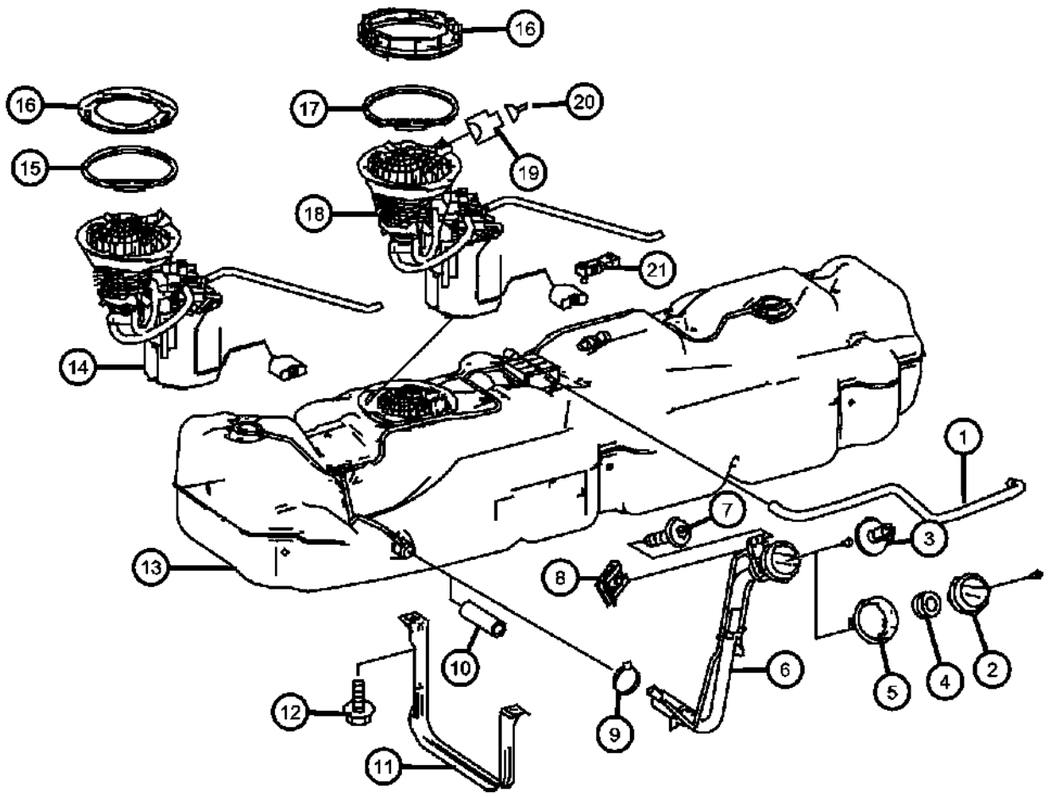

ITEM	PART NUMBER	QTY	LINE	SERIES	BODY	ENGINE	TRANS	TRIM	DESCRIPTION
NOTE: Fuel Filler Neck For Diesel Engines[EXM]Is Not Serviced. Must Order Complete Fuel Tank.									
1	68013509AA	1	2, 3, 6, 7	L		EXM	DGZ		HOSE, Breather Line
2									CAP, Fuel Filler
	68013500AA	1	2, 3, 6, 7	L		EG2	DGZ		
	68017092AA	1	7, 2, 3, 6	L		EXM	DGZ		
3									RIVET, Fuel Cap Tether
	05102963AA	1	2, 3, 6, 7	L	13, 15, 17, 53, 55	EG2, EXM	DGZ		5.2MM
		1	3, 7	L	03, 05	EG2, EXM	DGZ		5.2MM
4	05133408AA	1	2, 3, 6, 7	L		EXM	DGZ		GROMMET, Chassis Wiring, Breather Line 26x25x15
5	68013502AA	1	2, 3, 6, 7	L		EXM	DGZ		SEAL, Fuel Cap
6	68013499AA	1	2, 3, 6, 7	L		EG2	DGZ		TUBE, Fuel Filler
7	06104120AA	1	2, 3, 6, 7	L		EG2, EXM	DGZ		SCREW, Hex Head, M6x12
8	68013488AA	1	2, 3, 6, 7	L		EXM	DGZ		NUT, Filler Pipe to Frame
9	05133494AA	1	2, 3, 6, 7	L		EG2	DGZ		CLAMP, Filler Pipe to Fuel Tank 25-40x13-SW8-W3
10	68013512AA	1	2, 3, 6, 7	L		EXM	DGZ		HOSE, Breather Line
11	68013514AA	1	2, 3, 6, 7	L		EG2, EXM	DGZ		STRAP, Fuel Tank
12	06104042AA	4	2, 3, 6, 7	L		EG2, EXM	DGZ		SCREW, Attachment Strap
13									TANK, Fuel
	68013486AA	1	2, 3, 6, 7	L		EG2	DGZ		
	68034061AA	1	2, 3, 6, 7	L		EXM	DGZ		
	68034449AA	1	3	L	05	EG2	DGZ		With [XFZ+AMG%AMK]
14	68013489AA	1	2, 3, 6, 7	L		EG2	DGZ		MODULE KIT, Fuel Pump/Level Unit
15	68013493AA	1	3, 6, 7, 2	L		EG2	DGZ		O RING
16	68013492AA	1	2, 3, 6, 7	L		EG2	DGZ		RING, Lock, Fuel Module
17	68013492AA	1							RING, (NOT SERVICED)
18									MODULE, Fuel Tank - Diesel
	68024008AA	1	2, 3, 6, 7	L		EXM	DGZ		With [XG3 And Or 3JV And Or XFZ]
	68024009AA	1	2, 3, 6, 7	L		EXM	DGZ		Without [XG3 And Or 3JV And Or XFZ]
19	05135758AA	1	2, 3, 6, 7	L		EG2, EXM	DGZ		CONNECTOR, Female

SPRINTER (VB)

SERIES	LINE	BODY	ENGINE	TRANSMISSION
L = LOWLINE	3 = HD DODGE 2WD 6 = Lt. Duty DODGE 4WD 2 = Med. Duty DODGE 2WD 7 = Med. Duty DODGE 4WD	17 = VAN WHEEL BASE 7 55 = WAGON WHEEL BASE 5 15 = VAN WHEEL BASE 5 53 = 119 WB 13 = 119 WB 05 = CAB CHASSIS WHEEL BASE 5 03 = CAB CHASSIS WHEEL BASE 3	EG2 = 3.5L V6 Gas Engine EXM = 3.0L V6 Turbo Diesel Engine	DGZ = 5-Speed Auto W5A380 Transmission

Fuel Tank & Related Parts
Figure 14-105

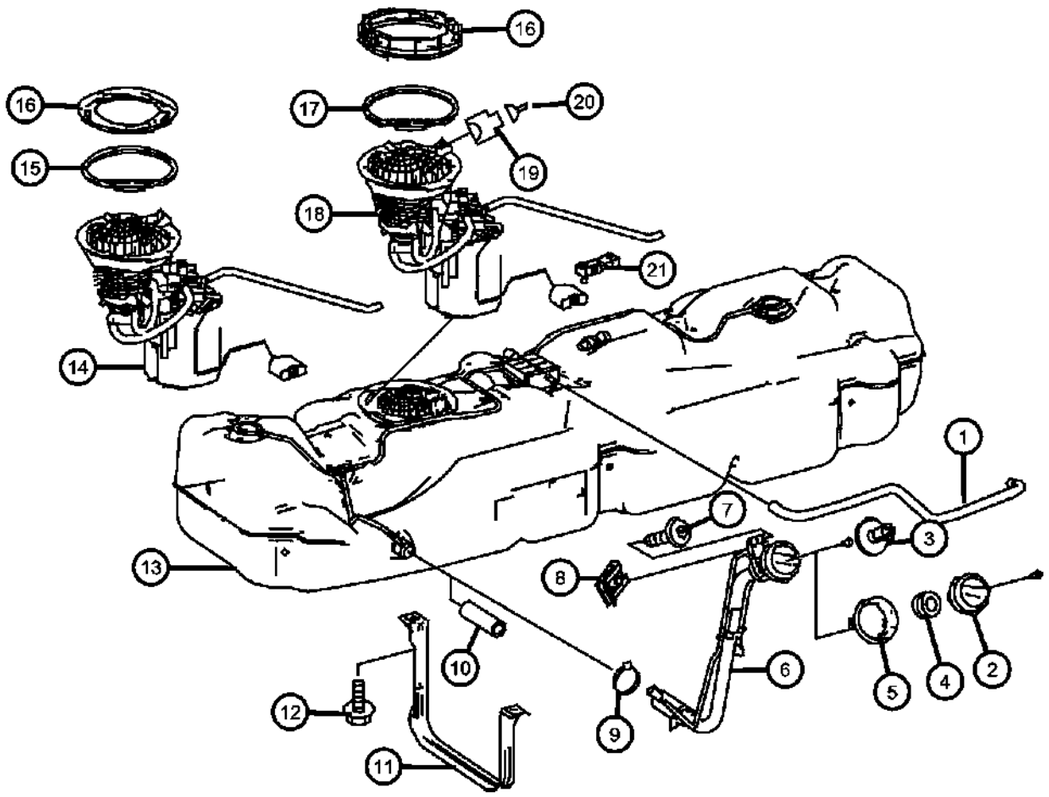

ITEM	PART NUMBER	QTY	LINE	SERIES	BODY	ENGINE	TRANS	TRIM	DESCRIPTION
20									TERMINAL
	05103877AA	AR	2, 3, 6, 7	L		EG2	DGZ		1.5-2.5MM2;M3/5
	05133353AA	AR	2, 3, 6, 7	L		EG2	DGZ		0.5-1.0MM2;M3/5
21	68013498AA	1	2, 3, 6, 7	L		EG2	DGZ		SENSOR, Pressure, OBD 2

SPRINTER (VB)

SERIES	LINE	BODY	ENGINE	TRANSMISSION
L = LOWLINE	3 = HD DODGE 2WD 6 = Lt. Duty DODGE 4WD 2 = Med. Duty DODGE 2WD 7 = Med. Duty DODGE 4WD	17 = VAN WHEEL BASE 7 55 = WAGON WHEEL BASE 5 15 = VAN WHEEL BASE 5 53 = 119 WB 13 = 119 WB 05 = CAB CHASSIS WHEEL BASE 5 03 = CAB CHASSIS WHEEL BASE 3	EG2 = 3.5L V6 Gas Engine EXM = 3.0L V6 Turbo Diesel Engine	DGZ = 5-Speed Auto W5A380 Transmission

AR = use ase required - = Non illustrrated part

<< RETURN TO GROUP INDEX

Fuel Filler Tube and Related
Figure 14-205

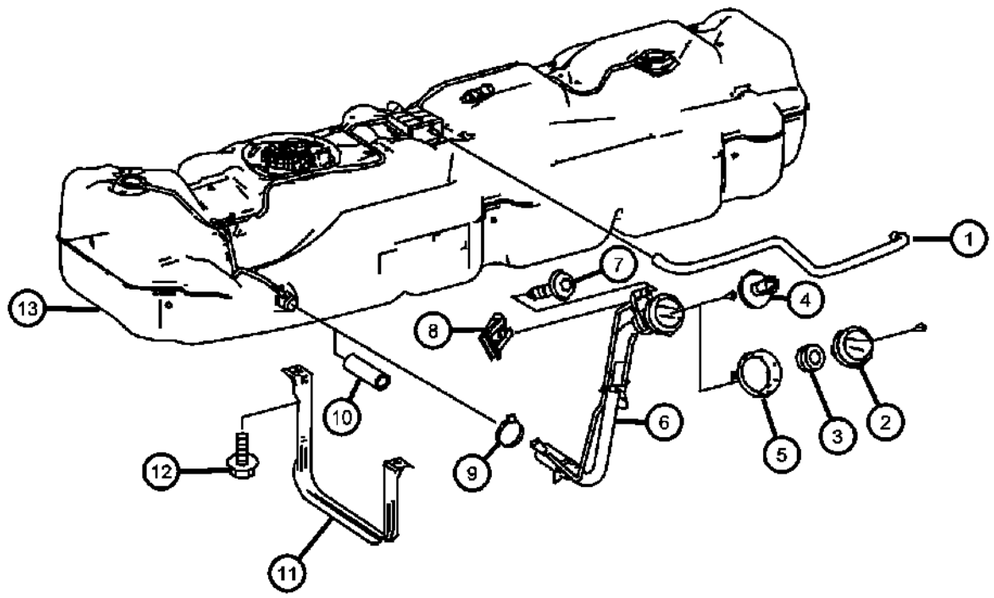

ITEM	PART NUMBER	QTY	LINE	SERIES	BODY	ENGINE	TRANS	TRIM	DESCRIPTION
Note:Fuel Filler Tube For Diesel Model Is Only Serviced With Compete Fuel Tank. For Fuel Tank Part Number Please See Illustration [510] Group [									
1	68013509AA	1	2, 3, 6, 7	L		EXM	DGZ		HOSE, Breather Line
2									CAP, Fuel Filler
	68013500AA	1	2, 3, 6, 7	L		EG2	DGZ		
	68017092AA	1	2, 3, 6, 7	L		EXM	DGZ		
3									RIVET, Fuel Cap Tether
	05102963AA	1	2, 3, 6, 7	L	13, 15, 17, 53, 55	EG2, EXM	DGZ		5.2MM
		1	3, 7	L	03, 05	EG2, EXM	DGZ		5.2MM
4	05133408AA	1	2, 3, 6, 7	L		EXM	DGZ		GROMMET, Chassis Wiring, Breather Line 26x25x15
5	68013502AA	1	2, 3, 6, 7	L		EXM	DGZ		SEAL, Fuel Cap
6	68013499AA	1	2, 3, 6, 7	L		EG2	DGZ		TUBE, Fuel Filler, See Note:
7	06104120AA	1	2, 3, 6, 7	L		EG2, EXM	DGZ		SCREW, Hex Head, M6x12
8	68013488AA	1	2, 3, 6, 7	L		EXM	DGZ		NUT, Filler Pipe to Frame
9									CLAMP
	05132913AA	1	2, 3, 6, 7	L		EXM	DGZ		Filler Pipe to Fuel Tank 25-40x13-SW8-W3
	05133494AA	1	2, 3, 6, 7	L		EG2	DGZ		Filler Pipe to Fuel Tank 25-40x13-SW8-W3
10	68013512AA	1	2, 3, 6, 7	L		EXM	DGZ		HOSE, Breather Line
11	68013514AA	1	2, 3, 6, 7	L		EG2, EXM	DGZ		STRAP, Fuel Tank
12	06104042AA	4	2, 3, 6, 7	L		EG2, EXM	DGZ		SCREW
13	68013486AA	1	2, 3, 6, 7	L		EG2	DGZ		TANK, Fuel

SPRINTER (VB)

SERIES	LINE	BODY	ENGINE	TRANSMISSION
L = LOWLINE	3 = HD DODGE 2WD 6 = Lt. Duty DODGE 4WD 2 = Med. Duty DODGE 2WD 7 = Med. Duty DODGE 4WD	17 = VAN WHEEL BASE 7 55 = WAGON WHEEL BASE 5 15 = VAN WHEEL BASE 5 53 = 119 WB 13 = 119 WB 05 = CAB CHASSIS WHEEL BASE 5 03 = CAB CHASSIS WHEEL BASE 3	EG2 = 3.5L V6 Gas Engine EXM = 3.0L V6 Turbo Diesel Engine	DGZ = 5-Speed Auto W5A380 Transmission

Fuel Lines and Related
Figure 14-305

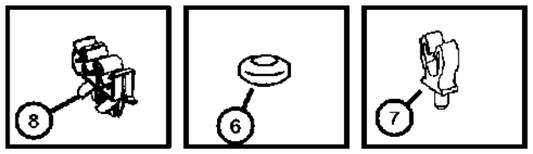

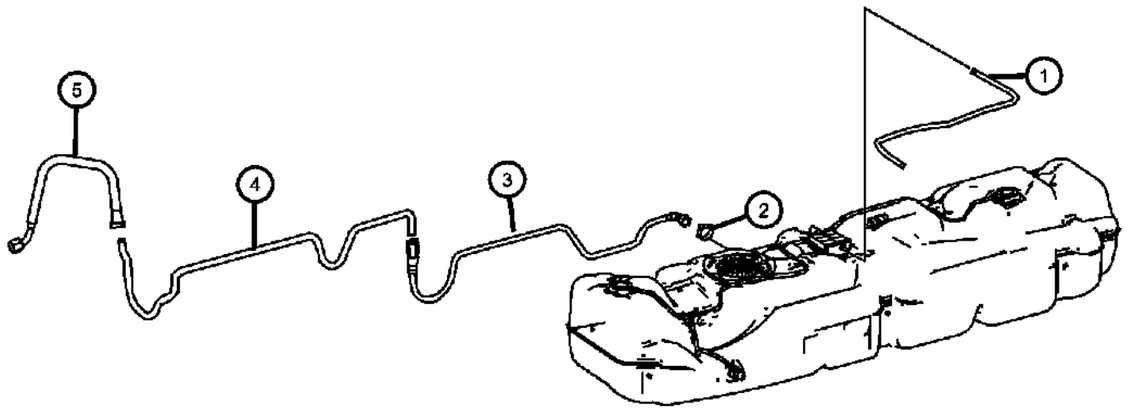

ITEM	PART NUMBER	QTY	LINE	SERIES	BODY	ENGINE	TRANS	TRIM	DESCRIPTION
1	68013506AA	1	2, 3, 6, 7	L		EG2	DGZ		TUBE, Fuel
2	06104819AA	2	2, 3, 6, 7	L		EXM	DGZ		TIE STRAP
3	68013495AA	1	2, 3, 6, 7	L		EG2	DGZ		TUBE, Fuel Supply
4	68013531AA	1	2, 3, 6, 7	L		EG2	DGZ		TUBE, Fuel Supply
5									TUBE, Fuel Supply
	68013532AA	1	2, 3, 6, 7	L		EG2	DGZ		Up To Chassis Build Date [08/31/2006]
	68017801AA	1	2, 3, 6, 7	L		EG2	DGZ		After Chassis Build Date [08/31/2006]
6	68013507AA	1	2, 3, 6, 7	L		EG2	DGZ		GROMMET, Chafe Protection to Console,B-Pillar
7	68013516AA	2	2, 3, 6, 7	L		EG2	DGZ		RETAINER
8	68013508AA	2	2, 3, 6, 7	L		EG2, EXM	DGZ		RETAINER

SPRINTER (VB)

SERIES	LINE	BODY	ENGINE	TRANSMISSION
L = LOWLINE	3 = HD DODGE 2WD 6 = Lt. Duty DODGE 4WD 2 = Med. Duty DODGE 2WD 7 = Med. Duty DODGE 4WD	17 = VAN WHEEL BASE 7 55 = WAGON WHEEL BASE 5 15 = VAN WHEEL BASE 5 53 = 119 WB 13 = 119 WB 05 = CAB CHASSIS WHEEL BASE 5 03 = CAB CHASSIS WHEEL BASE 3	EG2 = 3.5L V6 Gas Engine EXM = 3.0L V6 Turbo Diesel Engine	DGZ = 5-Speed Auto W5A380 Transmission

Fuel Lines and Related
Figure 14-310

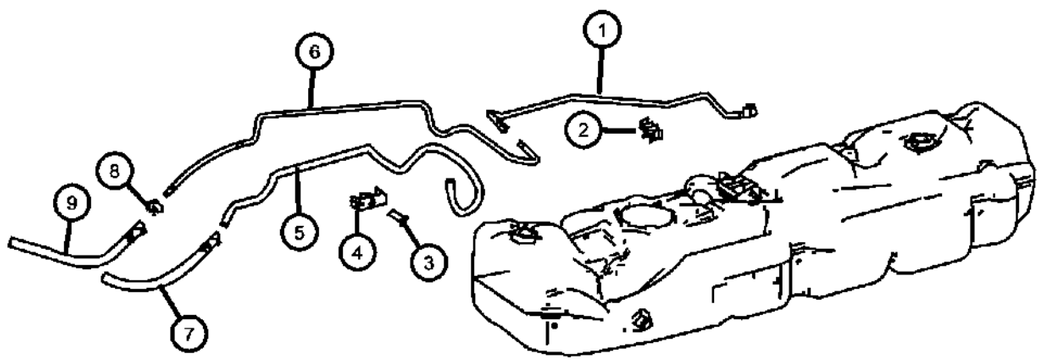

ITEM	PART NUMBER	QTY	LINE	SERIES	BODY	ENGINE	TRANS	TRIM	DESCRIPTION
1	68013494AA	1	2, 3, 6, 7	L		EXM	DGZ		TUBE, Fuel Supply
2	68013508AA	2	2, 3, 6, 7	L		EG2, EXM	DGZ		RETAINER
3									BOLT, Hex Head
	05133748AA	2	3, 7	L	03, 05	EXM	DGZ		M6x20
		2	2, 3, 6, 7	L	13, 15, 17, 53, 55	EXM	DGZ		M6x20
4	05137250AA	4	2, 3, 6, 7	L		EXM	DGZ		CLIP, Feed Line to Return Line
5	68013527AA	1	2, 3, 6, 7	L		EXM	DGZ		TUBE, Fuel Return Line
6	68013525AA	1	2, 3, 6, 7	L		EXM	DGZ		TUBE, Fuel Supply
7	68013528AA	1	2, 3, 6, 7	L		EXM	DGZ		TUBE, Fuel Return Line
8	68013529AA	1	2, 3, 6, 7	L		EXM	DGZ		CLAMP, Hose
9	68013526AA	1	2, 3, 6, 7	L		EXM	DGZ		TUBE, Fuel Supply

SPRINTER (VB)

SERIES	LINE	BODY	ENGINE	TRANSMISSION
L = LOWLINE	3 = HD DODGE 2WD 6 = Lt. Duty DODGE 4WD 2 = Med. Duty DODGE 2WD 7 = Med. Duty DODGE 4WD	17 = VAN WHEEL BASE 7 55 = WAGON WHEEL BASE 5 15 = VAN WHEEL BASE 5 53 = 119 WB 13 = 119 WB 05 = CAB CHASSIS WHEEL BASE 5 03 = CAB CHASSIS WHEEL BASE 3	EG2 = 3.5L V6 Gas Engine EXM = 3.0L V6 Turbo Diesel Engine	DGZ = 5-Speed Auto W5A380 Transmission

Fuel Lines and Related
Figure 14-315

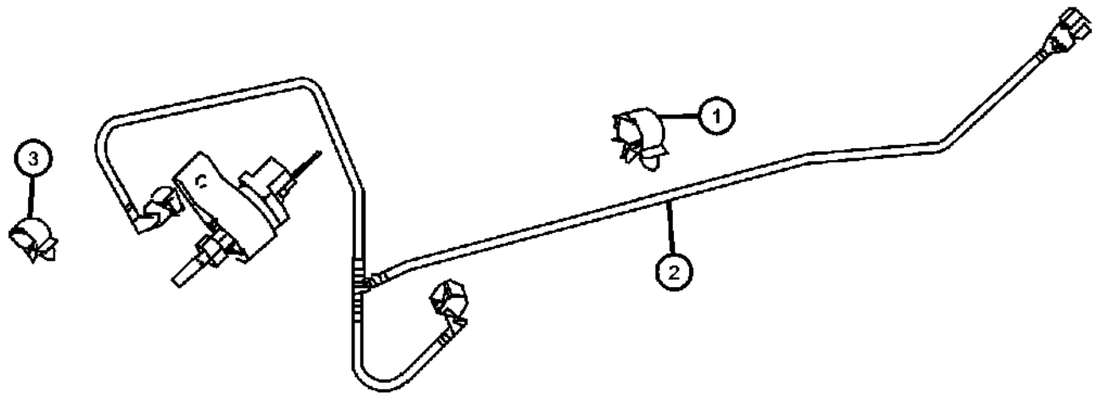

ITEM	PART NUMBER	QTY	LINE	SERIES	BODY	ENGINE	TRANS	TRIM	DESCRIPTION
1	05103736AA	2	2, 3, 6, 7	L	13, 15, 17, 53, 55	EG2, EXM	DGZ		CLAMP, 6.5x12.8MM
2									TUBE, Fuel
	68012826AA	1	2, 3, 6, 7	L	13, 15, 17, 53, 55	EXM	DGZ		With [3JV%HDB]
	68012825AA	1	2, 3, 6, 7	L	13, 15, 17, 53, 55	EXM	DGZ		With [XG3]
3	05103736AA	2	2, 3, 6, 7	L	13, 15, 17, 53, 55	EG2, EXM	DGZ		CLAMP, 6.5x12.8MM

SPRINTER (VB)

SERIES	LINE	BODY	ENGINE	TRANSMISSION
L = LOWLINE	3 = HD DODGE 2WD 6 = Lt. Duty DODGE 4WD 2 = Med. Duty DODGE 2WD 7 = Med. Duty DODGE 4WD	17 = VAN WHEEL BASE 7 55 = WAGON WHEEL BASE 5 15 = VAN WHEEL BASE 5 53 = 119 WB 13 = 119 WB 05 = CAB CHASSIS WHEEL BASE 5 03 = CAB CHASSIS WHEEL BASE 3	EG2 = 3.5L V6 Gas Engine EXM = 3.0L V6 Turbo Diesel Engine	DGZ = 5-Speed Auto W5A380 Transmission

Fuel Lines and Related
Figure 14-320

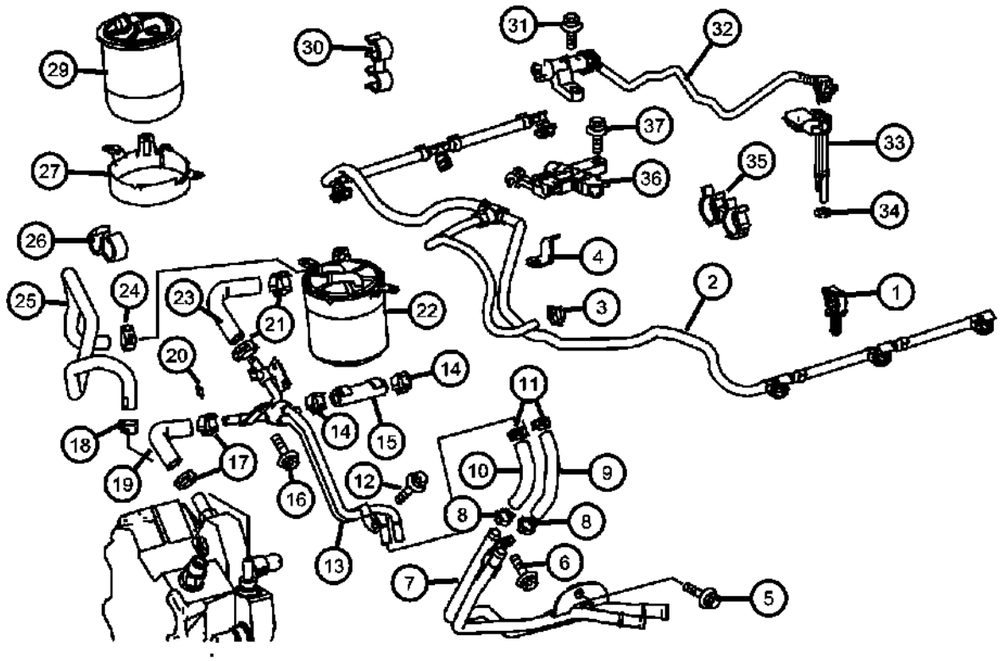

ITEM	PART NUMBER	QTY	LINE	SERIES	BODY	ENGINE	TRANS	TRIM	DESCRIPTION
1	68005721AA	1	2, 3, 6, 7	L		EXM	DGZ		RETAINER
2	68005720AA	1	2, 3, 6, 7	L		EXM	DGZ		TUBE, Fuel Return
3	05080439AB	1	2, 3, 6, 7	L		EXM	DGZ		CLAMP
4	05175596AA	1	2, 3, 6, 7	L		EXM	DGZ		BRACKET
5	06104085AA	1	2, 3, 6, 7	L		EXM	DGZ		SCREW
6	06104005AA	4	2, 3, 6, 7	L		EXM	DGZ		BOLT, 6 Lobe External Head, M6X1.00X16.00
7	68005709AA	1	2, 3, 6, 7	L		EXM	DGZ		LINE, Fuel
8	05126026AA	2	2, 3, 6, 7	L		EXM	DGZ		CLAMP, Hose
9	68005702AA	1	2, 3, 6, 7	L		EXM	DGZ		TUBE, Fuel
10	05175592AB	1	2, 3, 6, 7	L		EXM	DGZ		TUBE, Fuel
11	05126026AA	2	2, 3, 6, 7	L		EXM	DGZ		CLAMP, Hose
12									SCREW
	06104681AA	1	3, 7	L	03, 05	EG2, EXM	DGZ		M6x15
		1	2, 6	L	13, 15, 17, 53, 55	EG2, EXM	DGZ		M6x15
13	68005713AA	1	2, 3, 6, 7	L		EXM	DGZ		TUBE, Fuel
14	05080439AB	1	2, 3, 6, 7	L		EXM	DGZ		CLAMP, 12.5-13.5/8MM
15	68005707AA	1	2, 3, 6, 7	L		EXM	DGZ		HOSE, Fuel
16									BOLT
	06104004AA	1	3, 7	L	03, 05	EXM	DGZ		M6x12
		1	2, 3, 6, 7	L	13, 15, 17, 53, 55	EXM	DGZ		M6x12
17	05126026AA	2	2, 3, 6, 7	L		EXM	DGZ		CLAMP, Hose
18	05080439AB	1	2, 3, 6, 7	L		EXM	DGZ		CLAMP, 12.5-13.5/8MM
19	68005715AA	1	2, 3, 6, 7	L		EXM	DGZ		HOSE, Fuel
20	68005701AA	1	2, 3, 6, 7	L		EXM	DGZ		CLAMP
21	05126026AA	2	2, 3, 6, 7	L		EXM	DGZ		CLAMP, Hose
22	05175429AB	1	2, 3, 6, 7	L		EXM	DGZ		FILTER, Fuel
23	68005715AA	1	2, 3, 6, 7	L		EXM	DGZ		HOSE, Fuel, Separation Point for Filter
24	05080439AB	1	2, 3, 6, 7	L		EXM	DGZ		CLAMP
25	68005717AA	1	2, 3, 6, 7	L		EXM	DGZ		HOSE, Fuel, At Injection Pump
26	05170616AA	1	2, 3, 6, 7	L		EXM	DGZ		CLAMP

SPRINTER (VB)

SERIES	LINE	BODY	ENGINE	TRANSMISSION
L = LOWLINE	3 = HD DODGE 2WD 6 = Lt. Duty DODGE 4WD 2 = Med. Duty DODGE 2WD 7 = Med. Duty DODGE 4WD	17 = VAN WHEEL BASE 7 55 = WAGON WHEEL BASE 5 15 = VAN WHEEL BASE 5 53 = 119 WB 13 = 119 WB 05 = CAB CHASSIS WHEEL BASE 5 03 = CAB CHASSIS WHEEL BASE 3	EG2 = 3.5L V6 Gas Engine EXM = 3.0L V6 Turbo Diesel Engine	DGZ = 5-Speed Auto W5A380 Transmission

AR = use ase required - = Non illustrrated part

<< RETURN TO GROUP INDEX

Fuel Lines and Related
Figure 14-320

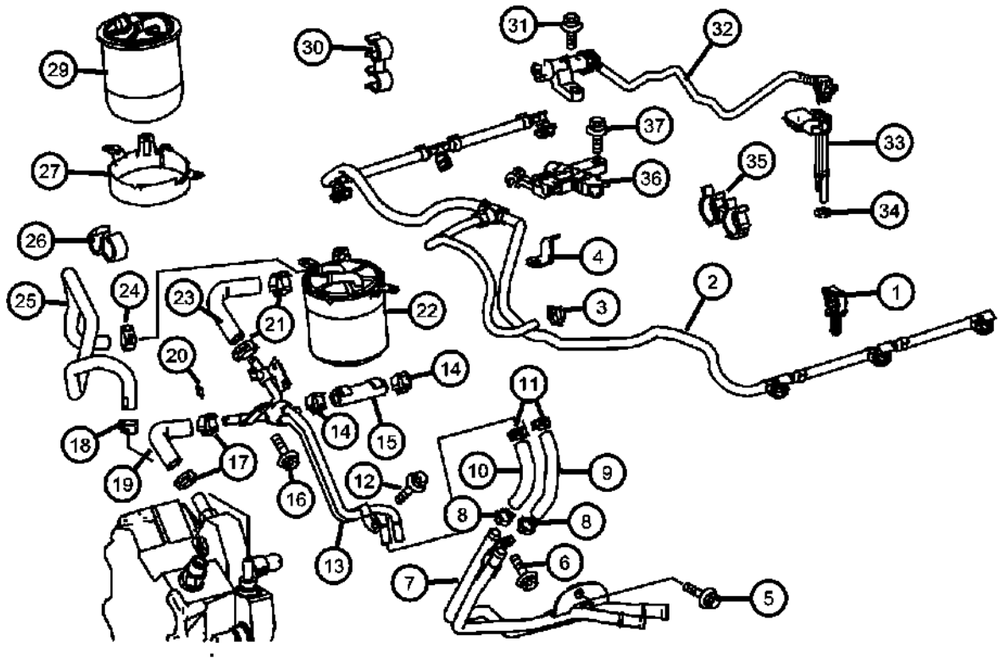

ITEM	PART NUMBER	QTY	LINE	SERIES	BODY	ENGINE	TRANS	TRIM	DESCRIPTION
27	68005729AA	1	2, 3, 6, 7	L		EXM	DGZ		BRACKET, Fuel Filter
-28	68021057AA	1	2, 3, 6, 7	L		EXM	DGZ		BRACKET, Holder
29	05175429AB	1	2, 3, 6, 7	L		EXM	DGZ		FILTER, Fuel
30	68005734AA	2	2, 3, 6, 7	L		EXM	DGZ		CLAMP, CLAMP
31	06104006AA	1	2, 3, 6, 7	L		EXM	DGZ		BOLT, Torx Socket Head, M6X1.00X20.00
32	68021058AA	1	2, 3, 6, 7	L		EXM	DGZ		HOSE, Fuel
33	05117542AA	1	2, 3, 6, 7	L		EXM	DGZ		SENSOR, Fuel/Water
34	05138876AA	1	2, 3, 6, 7	L		EXM	DGZ		O RING
35	05127508AA	1	2, 3, 6, 7	L		EXM	DGZ		CLAMP, Hose, 14-16MM
36	05175595AA	1	2, 3, 6, 7	L		EXM	DGZ		BRACKET
37	06104683AA	2	2, 3, 6, 7	L		EXM	DGZ		BOLT, 6 Lobe External Head, M6x1.0x23.0

SPRINTER (VB)

SERIES	LINE	BODY	ENGINE	TRANSMISSION
L = LOWLINE	3 = HD DODGE 2WD 6 = Lt. Duty DODGE 4WD 2 = Med. Duty DODGE 2WD 7 = Med. Duty DODGE 4WD	17 = VAN WHEEL BASE 7 55 = WAGON WHEEL BASE 5 15 = VAN WHEEL BASE 5 53 = 119 WB 13 = 119 WB 05 = CAB CHASSIS WHEEL BASE 5 03 = CAB CHASSIS WHEEL BASE 3	EG2 = 3.5L V6 Gas Engine EXM = 3.0L V6 Turbo Diesel Engine	DGZ = 5-Speed Auto W5A380 Transmission

Fuel Lines and Related
Figure 14-321

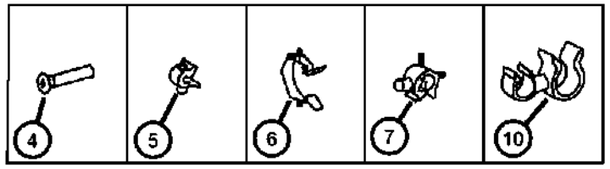

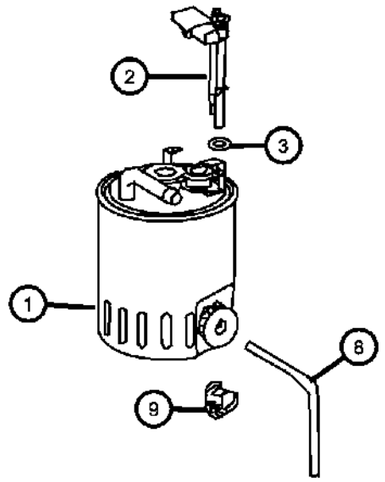

ITEM	PART NUMBER	QTY	LINE	SERIES	BODY	ENGINE	TRANS	TRIM	DESCRIPTION
1	05175429AA	1	2, 3, 6, 7	L		EXM	DGZ		FILTER, Fuel
2	05117542AA	1	2, 3, 6, 7	L		EXM	DGZ		SENSOR, Fuel/Water
3	05179861AA	2	2, 3, 6, 7	L		EXM	DGZ		O RING
4	05179861AA	2							SCREW, (NOT SERVICED)
5	05080431AB	1	2, 6	L	53, 55	EG2, EXM	DGZ		CLAMP, Hose To Fuel Filter [11 MM]
6	06104925AA	1	2, 3, 6, 7	L		EXM	DGZ		CLAMP, To Fuel Filter [38 MM]
7									CLIP, Retaining
	06104924AA	1	3, 7	L	03, 05	EXM	DGZ		Drain Hose [11 MM]
		1	2, 3, 6, 7	L	13, 15, 17, 53, 55	EXM	DGZ		Drain Hose [11 MM]
8	05138943AA	1	2, 3, 6, 7	L		EXM	DGZ		HOSE
9	68020907AA	2	2, 3, 6, 7	L		EXM	DGZ		CLIP, Drain Hose [18 x 14 MM]
10	68020908AA	1	2, 3, 6, 7	L		EXM	DGZ		BRACKET

SPRINTER (VB)

SERIES	LINE	BODY	ENGINE	TRANSMISSION
L = LOWLINE	3 = HD DODGE 2WD 6 = Lt. Duty DODGE 4WD 2 = Med. Duty DODGE 2WD 7 = Med. Duty DODGE 4WD	17 = VAN WHEEL BASE 7 55 = WAGON WHEEL BASE 5 15 = VAN WHEEL BASE 5 53 = 119 WB 13 = 119 WB 05 = CAB CHASSIS WHEEL BASE 5 03 = CAB CHASSIS WHEEL BASE 3	EG2 = 3.5L V6 Gas Engine EXM = 3.0L V6 Turbo Diesel Engine	DGZ = 5-Speed Auto W5A380 Transmission

Fuel Rail and Related
Figure 14-405

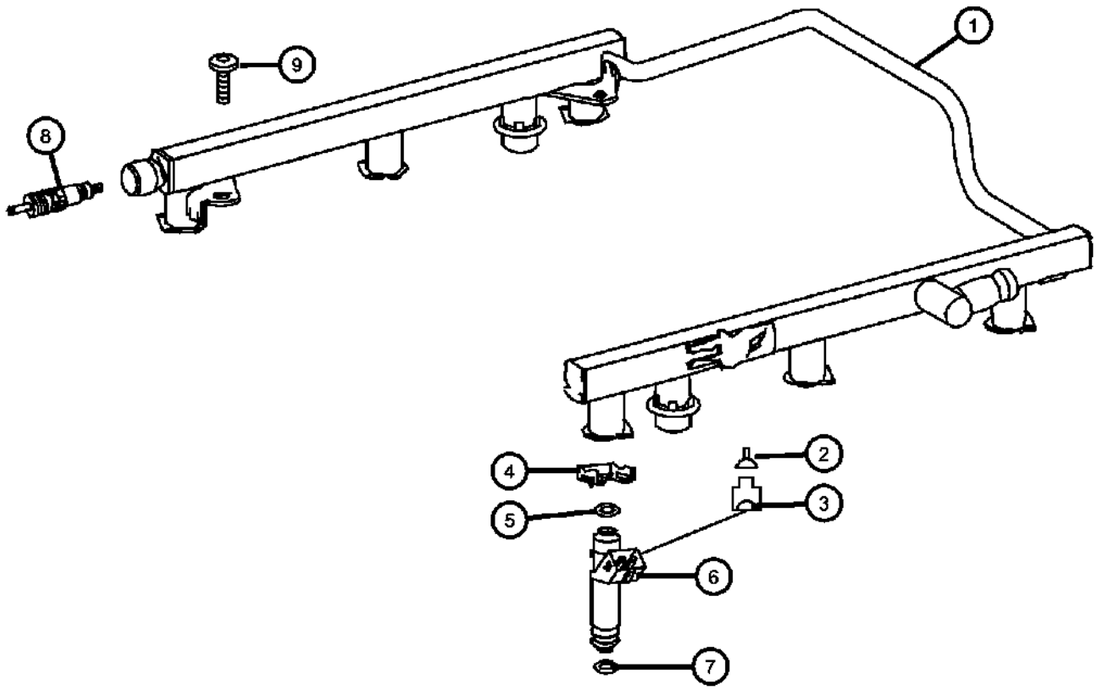

ITEM	PART NUMBER	QTY	LINE	SERIES	BODY	ENGINE	TRANS	TRIM	DESCRIPTION
1	68011691AA	1	2, 3, 6, 7	L		EG2	DGZ		RAIL, Fuel
2	68011877AA	AR	2, 3, 6, 7	L		EG2	DGZ		TERMINAL
3	68011801AA	6	2, 3, 6, 7	L		EG2	DGZ		CONNECTOR
4	05097191AA	6	2, 3, 6, 7	L		EG2	DGZ		CLIP, Fuel Injector
5	05101151AA	6	2, 3, 6, 7	L		EG2	DGZ		O RING, Fuel Injector
6	68011710AA	6	2, 3, 6, 7	L		EG2	DGZ		INJECTOR, Fuel
7	68011714AA	6	2, 3, 6, 7	L		EG2	DGZ		O RING, Fuel Injector
8	05101486AA	1	2, 3, 6, 7	L		EG2	DGZ		VALVE
9									SCREW
	06104681AA	4	3, 7	L	03, 05	EG2	DGZ		Fuel Distributor to Intake Manifold M6x15
		4	2, 6	L	13, 15, 17, 53, 55	EG2	DGZ		Fuel Distributor to Intake Manifold M6x15

SPRINTER (VB)

SERIES	LINE	BODY	ENGINE	TRANSMISSION
L = LOWLINE	3 = HD DODGE 2WD 6 = Lt. Duty DODGE 4WD 2 = Med. Duty DODGE 2WD 7 = Med. Duty DODGE 4WD	17 = VAN WHEEL BASE 7 55 = WAGON WHEEL BASE 5 15 = VAN WHEEL BASE 5 53 = 119 WB 13 = 119 WB 05 = CAB CHASSIS WHEEL BASE 5 03 = CAB CHASSIS WHEEL BASE 3	EG2 = 3.5L V6 Gas Engine EXM = 3.0L V6 Turbo Diesel Engine	DGZ = 5-Speed Auto W5A380 Transmission

AR = use ase required - = Non illustrrated part

Fuel Rail and Injectors Diesel Engines
Figure 14-420

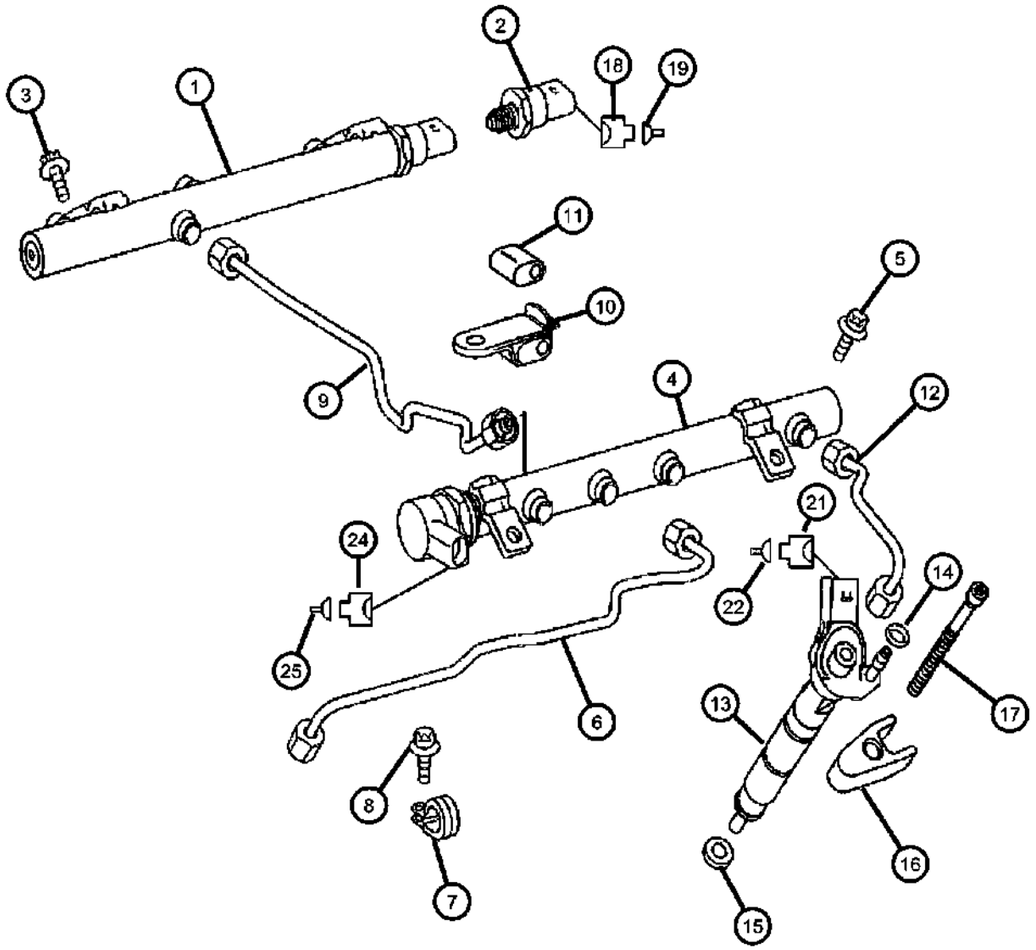

ITEM	PART NUMBER	QTY	LINE	SERIES	BODY	ENGINE	TRANS	TRIM	DESCRIPTION
1	68014064AA	1	2, 3, 6, 7	L		EXM	DGZ		RAIL, Fuel
2	68014067AA	1	2, 3, 6, 7	L		EXM	DGZ		SENDING UNIT, Fuel
3	05073701AA	2	2, 3, 6, 7	L		EXM	DGZ		SCREW, Fuel Rail To Head [M7x20]
4	68014068AA	1	2, 3, 6, 7	L		EXM	DGZ		RAIL, Fuel
5	05073701AA	2	2, 3, 6, 7	L		EXM	DGZ		SCREW, Fuel Rail To Cylinder Head [M7x20]
6	05175612AA	1	2, 3, 6, 7	L		EXM	DGZ		TUBE, Fuel Injector Supply, From High Pressure Pump To Fuel Rail
7	05126113AA	1	2, 3, 6, 7	L		EXM	DGZ		CLAMP, Delivery Line To Cylinfder Cover
8	06104682AA	1	2, 3, 6, 7	L		EXM	DGZ		BOLT, Delivery Line To Cylinder Head Cover [6x19]
9	05175618AA	1	2, 3, 6, 7	L		EXM	DGZ		TUBE, Crossover Fuel Line
10	05080296AA	2	2, 3, 6, 7	L		EXM	DGZ		CLAMP, Delivery Line To Cylinder Cover
11	05080297AA	2	2, 3, 6, 7	L		EXM	DGZ		INSULATOR, Rubber Insert
12	05175619AA	3	2, 3, 6, 7	L		EXM	DGZ		TUBERight & Left
13									INJECTOR, Fuel
	68014079AA	6	2, 3, 6, 7	L		EXM	DGZ		Up To Engine Assembly Number [40346214] / Engine Assembly Built Date [01/02/2007]
	68028404AA	6	2, 3, 6, 7	L		EXM	DGZ		Arter Engine Assemly Number [40346214] / Engine Assembly Built Date [01/02/2007]
14	68014080AA	6	2, 3, 6, 7	L		EXM	DGZ		O RING, Injector To Leak Line
15	05080301AA	3	2, 3, 6, 7	L		EXM	DGZ		O RING, Fuel Injector
16	05175620AA	6	2, 3, 6, 7	L		EXM	DGZ		BRACKET, Fuel Line
17	68001053AA	3	2, 3, 6, 7	L		EXM	DGZ		SCREW, Injector To Cylinder Head [M6x79], Right & Left
18	05120759AA	1	2, 3, 6, 7	L		EG2, EXM	DGZ		CONNECTOR, [3 Pin / B4/7 - B4/6]
19	05133353AA	AR	2, 3, 6, 7	L		EXM	DGZ		TERMINAL, [0.25 - 0.5 MM2; B4/7 B4/6]
-20	05103661AA	1	2, 3, 6, 7	L		EG2, EXM	DGZ		GASKET, [0.5 - 1.0 MM2; B4/7; B4/6]
21	05103931AA	6	2, 3, 6, 7	L		EXM	DGZ		CONNECTOR, Fuel Injector Connector [2 Pin; Y76/1 - Y76/6; Y110/1 - Y110/6]
22	05133353AA	AR	2, 3, 6, 7	L		EXM	DGZ		TERMINAL, Fuel Injector Connector [MM2; Y76/1 - Y76/6; Y110/1 - Y110/6]

SPRINTER (VB)

SERIES	LINE	BODY	ENGINE	TRANSMISSION
L = LOWLINE	3 = HD DODGE 2WD 6 = Lt. Duty DODGE 4WD 2 = Med. Duty DODGE 2WD 7 = Med. Duty DODGE 4WD	17 = VAN WHEEL BASE 7 55 = WAGON WHEEL BASE 5 15 = VAN WHEEL BASE 5 53 = 119 WB 13 = 119 WB 05 = CAB CHASSIS WHEEL BASE 5 03 = CAB CHASSIS WHEEL BASE 3	EG2 = 3.5L V6 Gas Engine EXM = 3.0L V6 Turbo Diesel Engine	DGZ = 5-Speed Auto W5A380 Transmission

AR = use ase required - = Non illustrrated part

<< RETURN TO GROUP INDEX

Fuel Rail and Injectors Diesel Engines
Figure 14-420

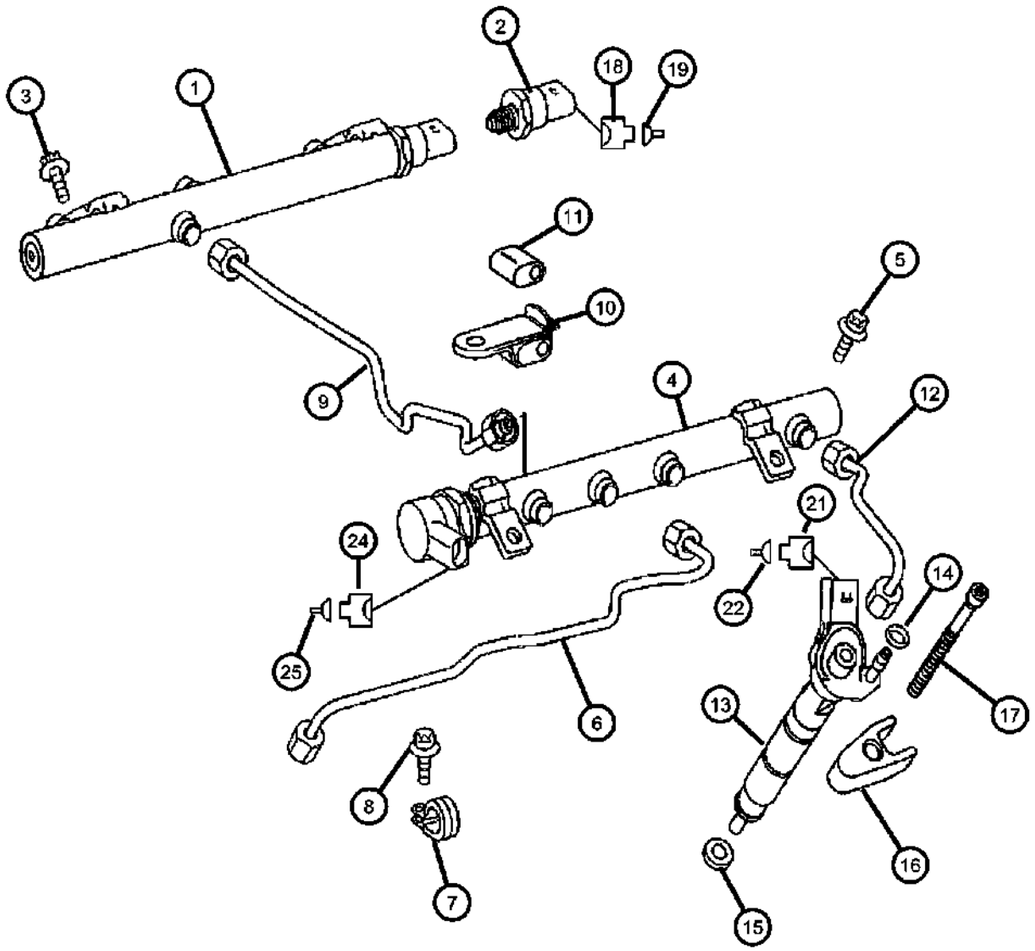

ITEM	PART NUMBER	QTY	LINE	SERIES	BODY	ENGINE	TRANS	TRIM	DESCRIPTION
-23	05103661AA	1	2, 3, 6, 7	L		EG2, EXM	DGZ		GASKET, Connector Gasket [MM;Y76/1 - Y76/6; Y110/1 - Y110/6]
24	05135841AA	1	2, 6, 7	L		EXM	DGZ		CONNECTOR, [2Pin; B; Y74]
25	05133353AA	AR	2, 3, 6, 7	L		EXM	DGZ		TERMINAL, Pressure Valve [.05 - 1.0; MM2; Y74]
-26	05103661AA	1	2, 3, 6, 7	L		EG2, EXM	DGZ		GASKET, Pressure Valve [.05 - 1.0; MM2; Y74]

SPRINTER (VB)

SERIES	LINE	BODY	ENGINE	TRANSMISSION
L = LOWLINE	3 = HD DODGE 2WD 6 = Lt. Duty DODGE 4WD 2 = Med. Duty DODGE 2WD 7 = Med. Duty DODGE 4WD	17 = VAN WHEEL BASE 7 55 = WAGON WHEEL BASE 5 15 = VAN WHEEL BASE 5 53 = 119 WB 13 = 119 WB 05 = CAB CHASSIS WHEEL BASE 5 03 = CAB CHASSIS WHEEL BASE 3	EG2 = 3.5L V6 Gas Engine EXM = 3.0L V6 Turbo Diesel Engine	DGZ = 5-Speed Auto W5A380 Transmission

Fuel Pump Module
Figure 14-505

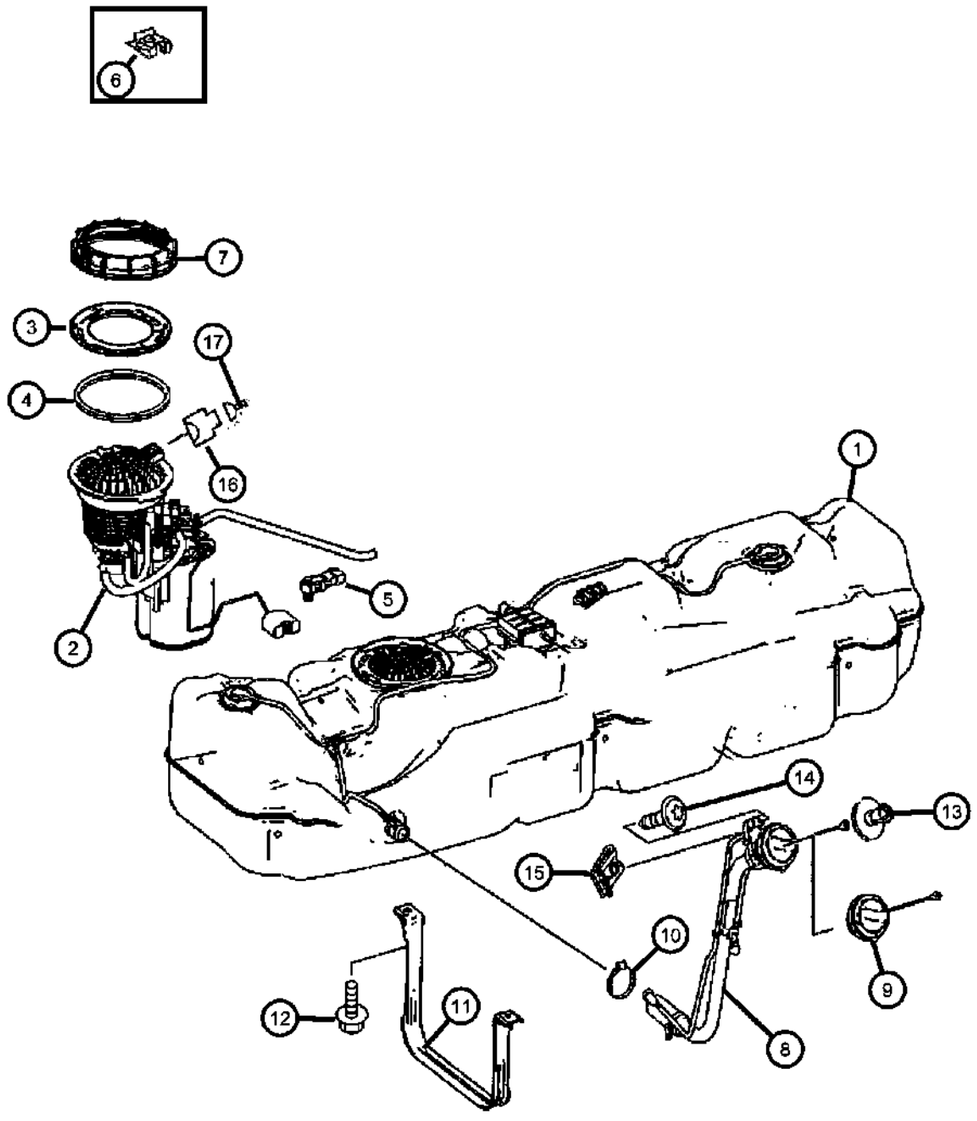

ITEM	PART NUMBER	QTY	LINE	SERIES	BODY	ENGINE	TRANS	TRIM	DESCRIPTION
1	68013486AA	1	2, 3, 6, 7	L		EG2	DGZ		TANK, Fuel
2	68013489AA	1	2, 3, 6, 7	L		EG2	DGZ		MODULE KIT, Fuel Pump/Level Unit
3	68013492AA	1	2, 3, 6, 7	L		EG2	DGZ		RING, Lock, Fuel Module
4	68013493AA	1	2, 3, 6, 7	L		EG2	DGZ		O RING
5	68013498AA	1	2, 3, 6, 7	L		EG2	DGZ		SENSOR, Pressure, [OBD2]
6	68013488AA	1	2, 3, 6, 7	L		EG2			NUT
7									RING, Lock, Fuel Module
	68013492AA	1	2, 6	L	13, 15, 17, 53, 55	EG2	DGZ		
		1	3, 7	L	03, 05	EG2	DGZ		
8	68013499AA	1	2, 3, 6, 7	L		EG2	DGZ		TUBE, Fuel Filler
9	68013500AA	1	2, 3, 6, 7	L		EG2	DGZ		CAP, Fuel Filler
10	05133494AA	1	2, 3, 6, 7	L		EG2	DGZ		CLAMP
11	68013514AA	1	2, 3, 6, 7	L		EG2, EXM	DGZ		STRAP, Fuel TankRear
12	06104042AA	4	2, 3, 6, 7	L		EG2, EXM	DGZ		SCREW
13									RIVET, Fuel Cap Tether
	05102963AA	1	2, 3, 6, 7	L	13, 15, 17, 53, 55	EG2, EXM	DGZ		
		1	3, 7	L	03, 05	EG2, EXM	DGZ		
14	06104515AA	1	2, 3, 6, 7	L		EG2, EXM	DGZ		SCREW, Fuel Filler Tube Mounting
15	68013488AA	1	2, 3, 6, 7	L		EG2			NUT
16	05135758AA	1	2, 3, 6, 7	L		EG2, EXM	DGZ		CONNECTOR, Female
17									TERMINAL
	05103877AA	AR	2, 3, 6, 7	L		EG2	DGZ		[1.5 - 2.5; MM2; M3/5]
	05133353AA	AR	2, 3, 6, 7	L		EG2	DGZ		[0.5 - 1.0 MM2; M3/5]
-18	05103663AA	AR	2, 3, 6, 7	L		EG2	DGZ		GROMMET, [0.25 - 2.5 MM2; M3/5]
-19	05120865AA	1	2, 3, 6, 7	L		EG2, EXM	DGZ		GASKET, Dummy Plug [M3/5]

SPRINTER (VB)

SERIES	LINE	BODY	ENGINE	TRANSMISSION
L = LOWLINE	3 = HD DODGE 2WD 6 = Lt. Duty DODGE 4WD 2 = Med. Duty DODGE 2WD 7 = Med. Duty DODGE 4WD	17 = VAN WHEEL BASE 7 55 = WAGON WHEEL BASE 5 15 = VAN WHEEL BASE 5 53 = 119 WB 13 = 119 WB 05 = CAB CHASSIS WHEEL BASE 5 03 = CAB CHASSIS WHEEL BASE 3	EG2 = 3.5L V6 Gas Engine EXM = 3.0L V6 Turbo Diesel Engine	DGZ = 5-Speed Auto W5A380 Transmission

AR = use ase required - = Non illustrrated part

<< RETURN TO GROUP INDEX

Fuel Pump Module
Figure 14-510

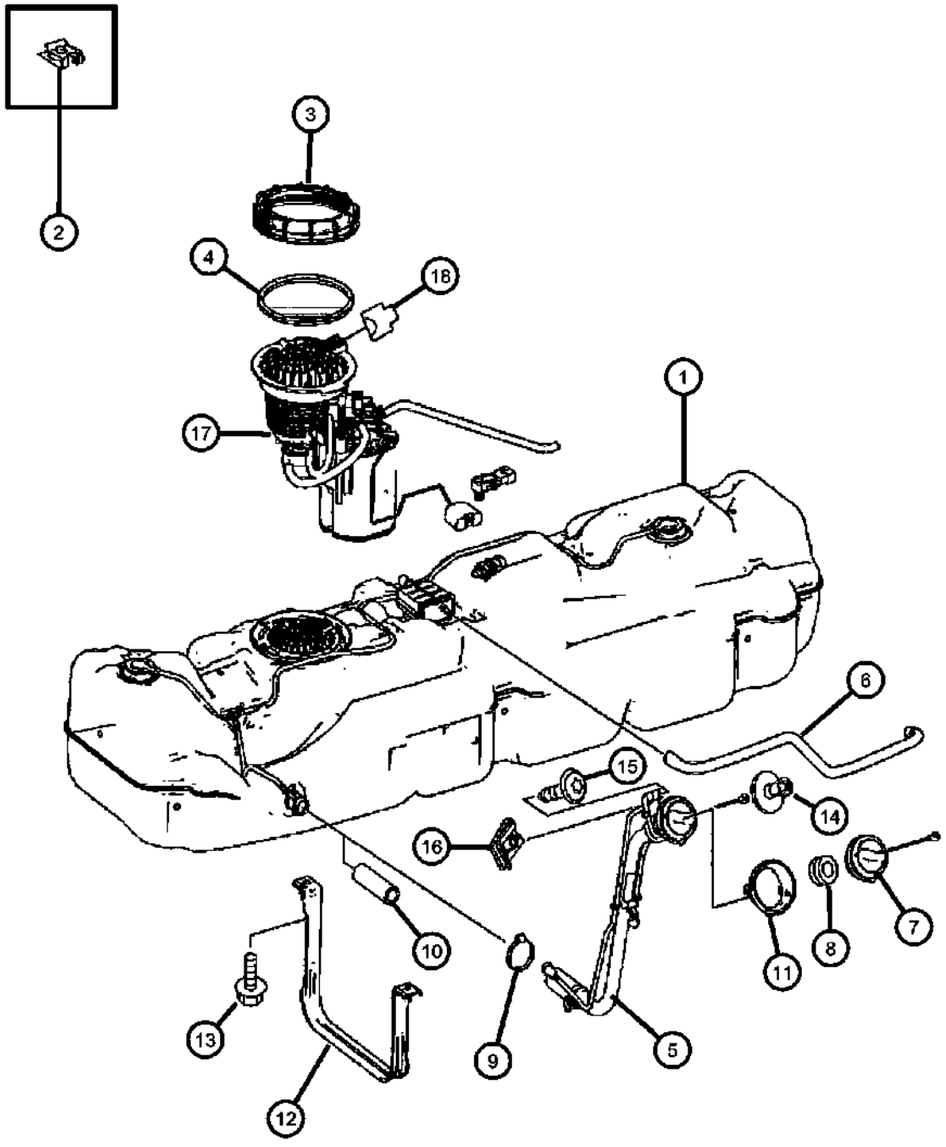

ITEM	PART NUMBER	QTY	LINE	SERIES	BODY	ENGINE	TRANS	TRIM	DESCRIPTION
Note:Fuel Filler Tube For Diesel Model Is Only Serviced With Compete Fuel Tank.									
1	68034061AA	1	2, 3, 6, 7	L		EXM	DGZ		TANK, Fuel
2	68013488AA	1	2, 3, 6, 7	L		EXM	DGZ		NUT
3	68017088AA	1	2, 3, 6, 7	L		EXM	DGZ		RING, Lock, Fuel Module
4									SEAL
	68017089AA	1	3, 7	L	03, 05	EXM	DGZ		
		1	2, 3, 6, 7	L	13, 15, 17, 53, 55	EXM	DGZ		
5		1							TUBE, Fuel Filler, (NOT SERVICED)
6	68013509AA	1	2, 3, 6, 7	L		EXM	DGZ		HOSE, Vent Line
7	68017092AA	1	2, 3, 6, 7	L		EXM	DGZ		CAP, Fuel Filler
8	05133408AA	1	2, 3, 6, 7	L		EXM	DGZ		GROMMET, Chassis Wiring
9	05133408AA	1							CLAMP, (NOT SERVICED)
10	68013512AA	1	2, 3, 6, 7	L		EXM	DGZ		HOSE, Filler Tube Breather Line
11	68013502AA	1	2, 3, 6, 7	L		EXM	DGZ		SEAL, Fuel Cap
12	68013514AA	1	2, 3, 6, 7	L		EG2, EXM	DGZ		STRAP, Fuel TankFront
13	06104042AA	4	2, 3, 6, 7	L		EG2, EXM	DGZ		SCREW
14									RIVET, Fuel Cap Tether
	05102963AA	1	2, 3, 6, 7	L	13, 15, 17, 53, 55	EG2, EXM	DGZ		
		1	3, 7	L	03, 05	EG2, EXM	DGZ		
15	06104515AA	1	2, 3, 6, 7	L		EG2, EXM	DGZ		SCREW, Fuel Filler Tube Mounting
16	68013488AA	1	2, 3, 6, 7	L		EXM	DGZ		NUT
17	68013491AA	1	2, 3, 6, 7	L		EXM	DGZ		MODULE, Fuel Tank - Diesel
18	05135758AA	1	2, 3, 6, 7	L		EG2, EXM	DGZ		CONNECTOR, Female, [4 Pin / M3,5]
-19	05133353AA	AR	2, 3, 6, 7	L		EXM	DGZ		TERMINAL, [0.5 - 1.0 MM2; M3/5]

SPRINTER (VB)

SERIES	LINE	BODY	ENGINE	TRANSMISSION
L = LOWLINE	3 = HD DODGE 2WD 6 = Lt. Duty DODGE 4WD 2 = Med. Duty DODGE 2WD 7 = Med. Duty DODGE 4WD	17 = VAN WHEEL BASE 7 55 = WAGON WHEEL BASE 5 15 = VAN WHEEL BASE 5 53 = 119 WB 13 = 119 WB 05 = CAB CHASSIS WHEEL BASE 5 03 = CAB CHASSIS WHEEL BASE 3	EG2 = 3.5L V6 Gas Engine EXM = 3.0L V6 Turbo Diesel Engine	DGZ = 5-Speed Auto W5A380 Transmission

AR = use ase required - = Non illustrrated part

Fuel Injection Pump and Related
Figure 14-520

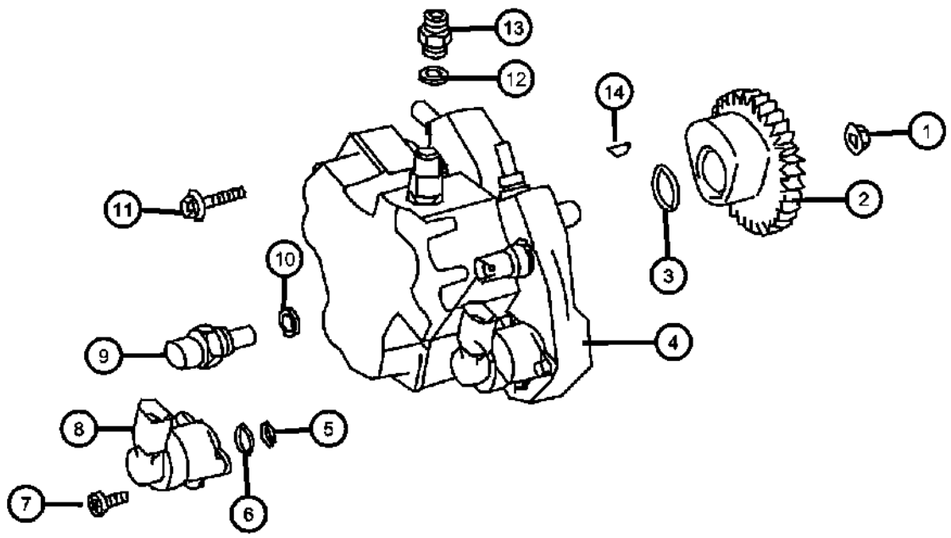

ITEM	PART NUMBER	QTY	LINE	SERIES	BODY	ENGINE	TRANS	TRIM	DESCRIPTION
1	06104719AA	1	2, 3, 6, 7	L		EXM	DGZ		NUT, Hex Flange Lock, M14x1.50
2	05175601AA	1	2, 3, 6, 7	L		EXM	DGZ		GEAR, Injection Pump
3	68014061AA	1	2, 3, 6, 7	L		EXM	DGZ		GASKET
4	68014060AA	1	2, 3, 6, 7	L		EXM	DGZ		PUMP, Fuel Injection
5	05142116AA	1	2, 3, 6, 7	L		EXM	DGZ		GASKET, Injection Pump
6	05142117AA	1	2, 3, 6, 7	L		EXM	DGZ		GASKET, Injection Pump
7	05175770AA	3	2, 3, 6, 7	L		EXM	DGZ		SCREW, Valve to Housing
8	68028268AA	1	2, 3, 6, 7	L		EXM	DGZ		VALVE, Flow Control
9	05103534AA	1	2, 3, 6, 7	L		EXM	DGZ		SENDING UNIT, Temperature Gauge
10	05179226AA	1	2, 3, 6, 7	L		EXM	DGZ		GASKET
11	68014063AA	3	2, 3, 6, 7	L		EXM	DGZ		SCREW, Injection Pump to Cylinder Head
12	05175769AA	1	2, 3, 6, 7	L		EXM	DGZ		O RING
13	05175768AA	1	2, 3, 6, 7	L		EXM	DGZ		CONNECTOR, Fuel Line
14	05175602AA	1	2, 3, 6, 7	L		EXM	DGZ		KEY, Woodruff, Drive Gear to Injection Pump

SPRINTER (VB)

SERIES	LINE	BODY	ENGINE	TRANSMISSION
L = LOWLINE	3 = HD DODGE 2WD 6 = Lt. Duty DODGE 4WD 2 = Med. Duty DODGE 2WD 7 = Med. Duty DODGE 4WD	17 = VAN WHEEL BASE 7 55 = WAGON WHEEL BASE 5 15 = VAN WHEEL BASE 5 53 = 119 WB 13 = 119 WB 05 = CAB CHASSIS WHEEL BASE 5 03 = CAB CHASSIS WHEEL BASE 3	EG2 = 3.5L V6 Gas Engine EXM = 3.0L V6 Turbo Diesel Engine	DGZ = 5-Speed Auto W5A380 Transmission

Fuel Injection Pump and Related
Figure 14-525

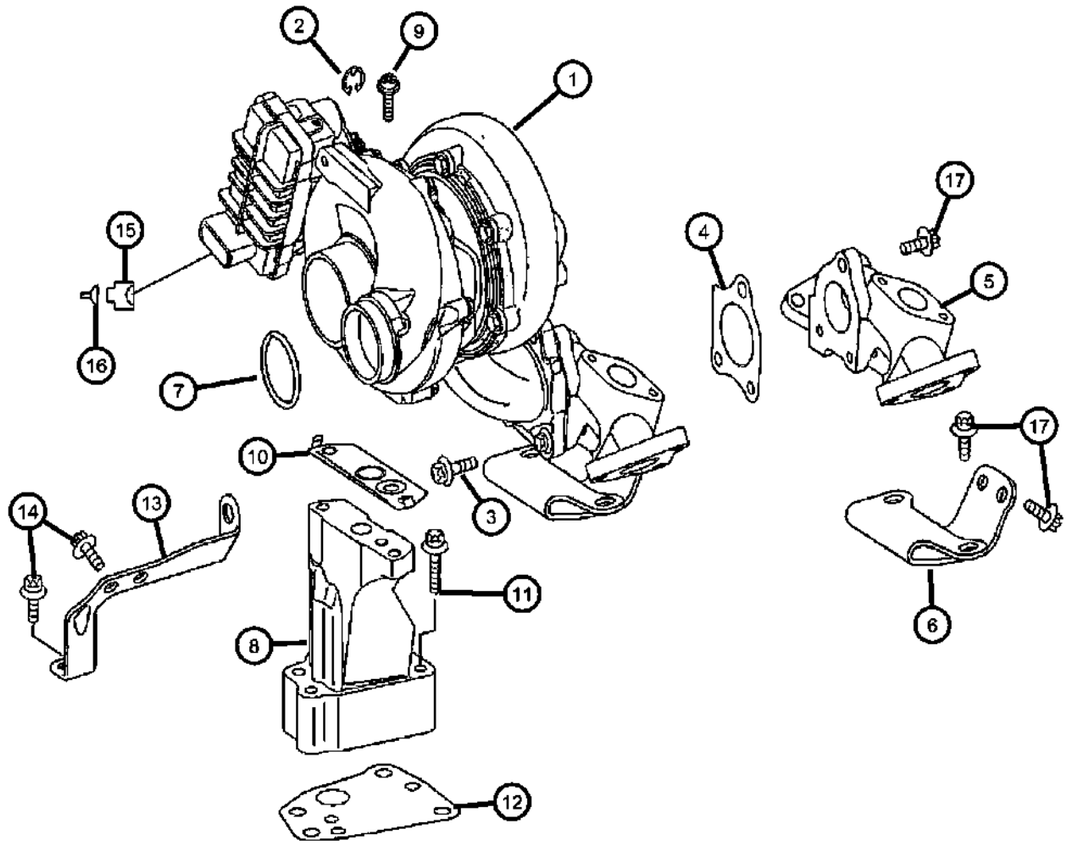

ITEM	PART NUMBER	QTY	LINE	SERIES	BODY	ENGINE	TRANS	TRIM	DESCRIPTION
1	68004666AA	1	2, 3, 6, 7	L		EXM	DGZ		TURBOCHARGER
2	05183127AA	2	2, 3, 6, 7	L		EXM	DGZ		RETAINER
3	05073720AB	3	2, 3, 6, 7	L		EXM	DGZ		BOLT, Turbocharger To Exhaust Manafold
4	05175629AA	1	2, 3, 6, 7	L		EXM	DGZ		GASKET, Turbocharger, Turbocharger To Support
5	68004669AA	1	2, 3, 6, 7	L		EXM	DGZ		MANIFOLD, Collector Pipe
6	68012295AA	1	2, 3, 6, 7	L		EXM	DGZ		BRACKET
7	05175626AA	1	2, 3, 6, 7	L		EXM	DGZ		O RING
8	05175627AA	1	2, 3, 6, 7	L		EXM	DGZ		BRACKET, Turbo Charger
9	05073710AA	2	2, 3, 6, 7	L		EXM	DGZ		SCREW
10	05175630AA	1	2, 3, 6, 7	L		EXM	DGZ		GASKET, Turbocharger
11	05133207AA	4	2, 3, 6, 7	L		EXM	DGZ		BOLT, [M8x55]
12	05175632AA	1	2, 3, 6, 7	L		EXM	DGZ		GASKET, Turbocharger
13	68012302AA	1	2, 3, 6, 7	L		EXM	DGZ		BRACKET
14	06104005AA	4	2, 3, 6, 7	L		EXM	DGZ		BOLT, 6 Lobe External Head, M6X1.00X16.00, [M6x16]
15	05120780AA	1	2, 3, 6, 7	L		EG2, EXM	DGZ		CONNECTOR, [5 Pin: Y77] [VNR] Actuator Connector
16	05133353AA	AR	2, 3, 6, 7	L		EXM	DGZ		TERMINAL
17	05073720AB	3	2, 3, 6, 7	L		EXM	DGZ		BOLT

SPRINTER (VB)

SERIES	LINE	BODY	ENGINE	TRANSMISSION
L = LOWLINE	3 = HD DODGE 2WD 6 = Lt. Duty DODGE 4WD 2 = Med. Duty DODGE 2WD 7 = Med. Duty DODGE 4WD	17 = VAN WHEEL BASE 7 55 = WAGON WHEEL BASE 5 15 = VAN WHEEL BASE 5 53 = 119 WB 13 = 119 WB 05 = CAB CHASSIS WHEEL BASE 5 03 = CAB CHASSIS WHEEL BASE 3	EG2 = 3.5L V6 Gas Engine EXM = 3.0L V6 Turbo Diesel Engine	DGZ = 5-Speed Auto W5A380 Transmission

AR = use ase required - = Non illustrrated part

<< RETURN TO GROUP INDEX

Throttle Body
Figure 14-601

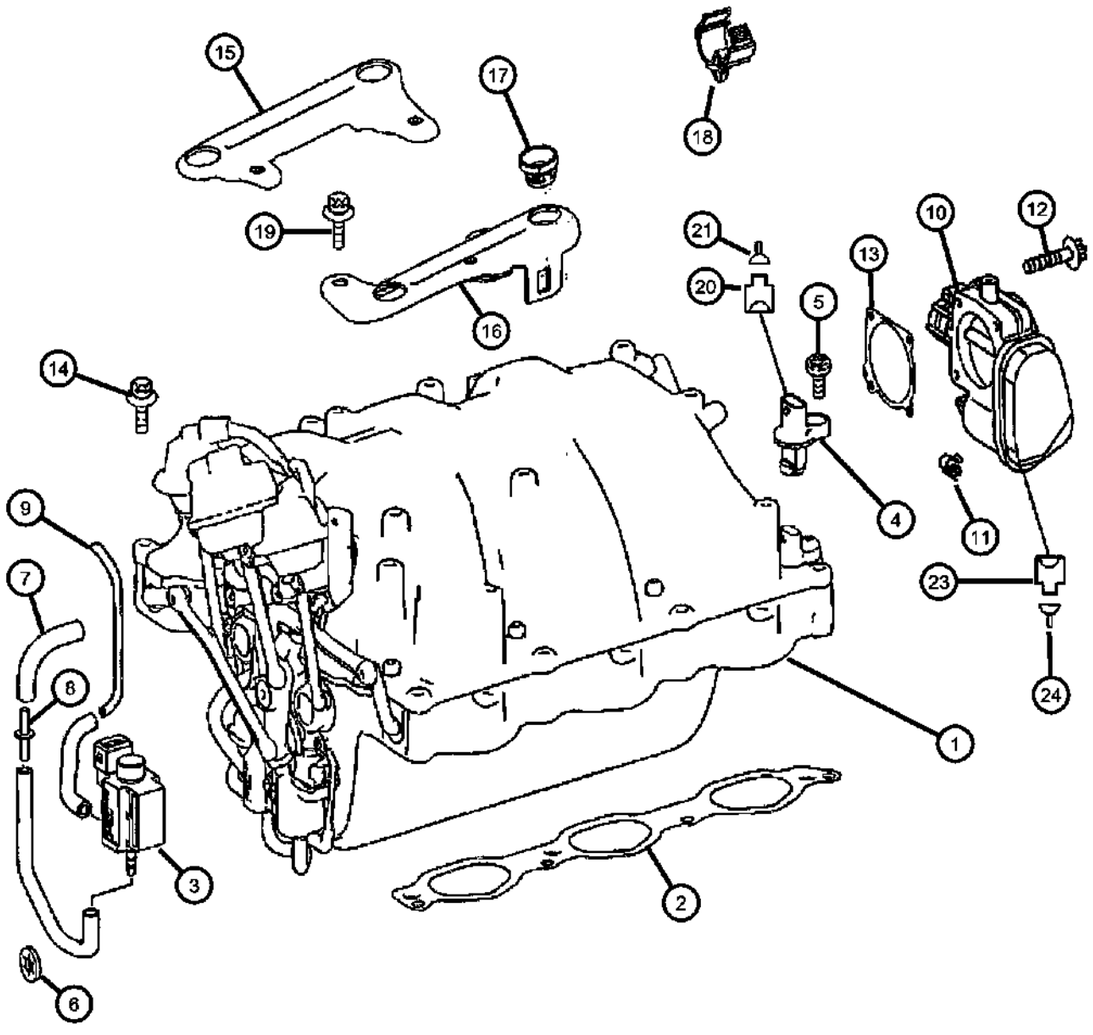

ITEM	PART NUMBER	QTY	LINE	SERIES	BODY	ENGINE	TRANS	TRIM	DESCRIPTION
1	68011680AA	1	2, 3, 6, 7	L		EG2	DGZ		MANIFOLD, Intake
2	68011683AA	1	2, 3, 6, 7	L		EG2	DGZ		GASKET, Throttle Body
3	05099823AA	2	2, 3, 6, 7	L		EG2	DGZ		SOLENOID, Intake Manifold
4	68011686AA	2	2, 3, 6, 7	L		EG2	DGZ		SOLENOID, Intake Manifold, Intake Manifold [Tumble Flap] Switch
5	06104120AA	2	2, 3, 6, 7	L		EG2	DGZ		SCREW, Hex Head, M6x12, [M6x12]
6	05102929AA	11	2, 3, 6, 7	L		EG2	DGZ		PUSH NUT
7	05080390AA	1	2, 3, 6, 7	L		EG2	DGZ		HOSE, [8x3.5MM]
8	05080337AA	1	2, 3, 6, 7	L		EG2	DGZ		CONNECTOR, [4MM]
9	05125912AA	0	2, 3, 6, 7	L		EG2	DGZ		HOSE, Charge Air, [4x0.75MM]
10	05159298AA	1	2, 3, 6, 7	L		EG2	DGZ		THROTTLE BODY
11	05098164AA	1	2, 3, 6, 7	L		EG2	DGZ		BRACKET, Hose
12	68011720AA	4	2, 3, 6, 7	L		EG2	DGZ		SCREW, Throttle Body, [6x35]
13									GASKET
	68011721AA	1	2, 3, 6, 7	L		EG2	DGZ		Left, Cylinder Head
	68011723AA	1	2, 3, 6, 7	L		EG2	DGZ		Right, Cylinder Head
14	06104012AA	8	2, 3, 6, 7	L		EG2	DGZ		SCREW, Torx, M6X1.00X50
15	68011725AA	1	2, 3, 6, 7	L		EG2	DGZ		BRACKET
16	68011729AA	1	2, 3, 6, 7	L		EG2	DGZ		BRACKET
17	68005688AA	4	2, 3, 6, 7	L		EG2	DGZ		INSULATOR
18	68011733AA	1	2, 3, 6, 7	L		EG2	DGZ		INSULATOR, Wiring
19	06104675AA	4	2, 3, 6, 7	L		EG2	DGZ		BOLT, Pan Head, M6.0X1.00X14.00
20	68011285AA	1	2, 3, 6, 7	L		EG2	DGZ		CONNECTOR
21									TERMINAL
	68011877AA	AR	2, 3, 6, 7	L		EG2	DGZ		
	68011878AA	AR	2, 3, 6, 7	L		EG2, EXM	DGZ		[B28/9 B28/10]
-22	68011050AA	AR	2, 3, 6, 7	L		EG2	DGZ		GASKET, [B28/9 - B28/10]
23	05143912AA	1	2, 3, 6, 7	L		EG2, EXM	DGZ		CONNECTOR, [6 Pin M16/6]
24	05138911AA	AR	2, 3, 6, 7	L		EG2	DGZ		TERMINAL, [0.5 - 0.75 MM2; M16/6]
-25	05120859AA	99	2, 3, 6, 7	L		EG2	DGZ		GASKET, [0.9 - 1.3 MMS; M16/6]

SPRINTER (VB)

SERIES	LINE	BODY	ENGINE	TRANSMISSION
L = LOWLINE	3 = HD DODGE 2WD 6 = Lt. Duty DODGE 4WD 2 = Med. Duty DODGE 2WD 7 = Med. Duty DODGE 4WD	17 = VAN WHEEL BASE 7 55 = WAGON WHEEL BASE 5 15 = VAN WHEEL BASE 5 53 = 119 WB 13 = 119 WB 05 = CAB CHASSIS WHEEL BASE 5 03 = CAB CHASSIS WHEEL BASE 3	EG2 = 3.5L V6 Gas Engine EXM = 3.0L V6 Turbo Diesel Engine	DGZ = 5-Speed Auto W5A380 Transmission

AR = use ase required - = Non illustrrated part

<< RETURN TO GROUP INDEX

Throttle Body
Figure 14-601

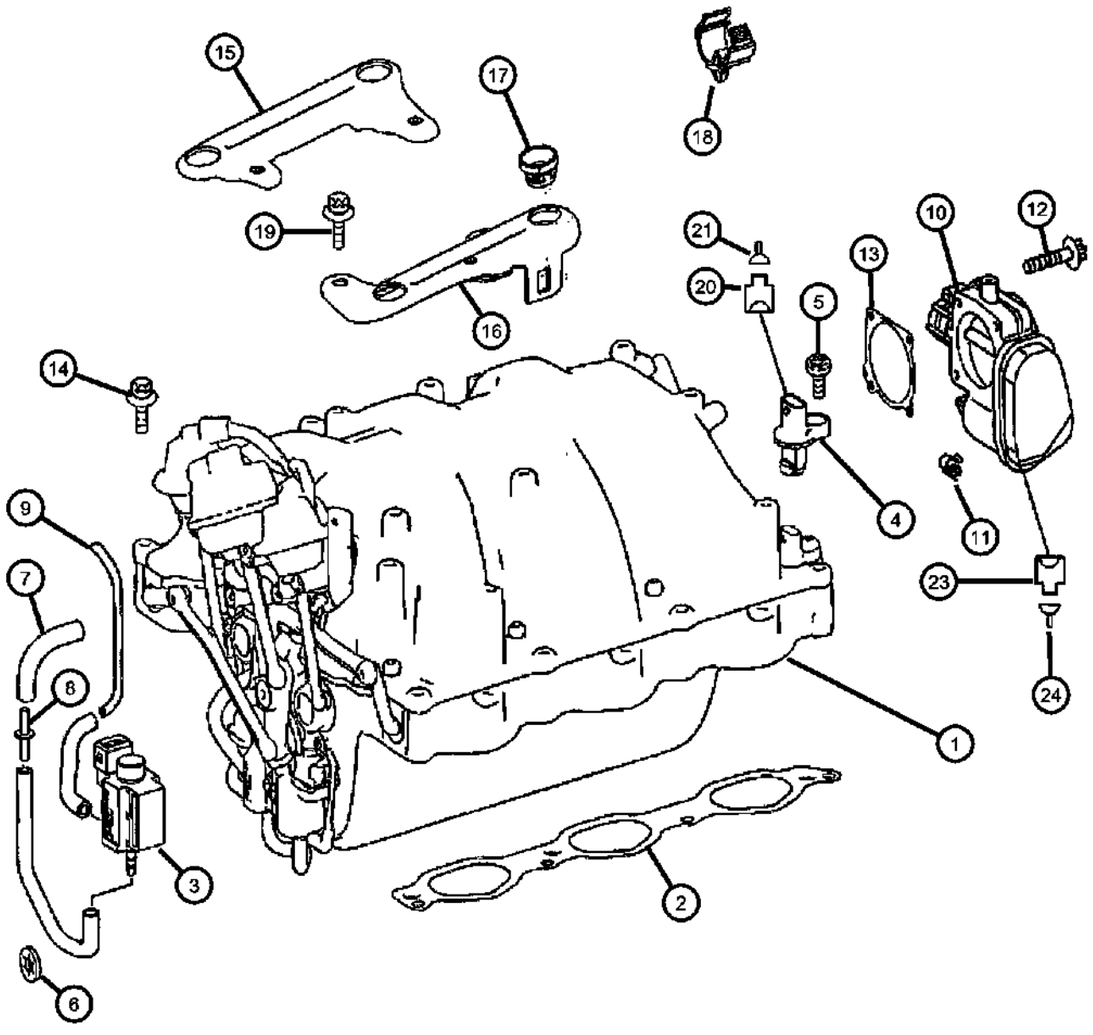

ITEM	PART NUMBER	QTY	LINE	SERIES	BODY	ENGINE	TRANS	TRIM	DESCRIPTION
-26	05135804AA	1	2, 3, 6, 7	L		EG2, EXM	DGZ		TUBE, Heat Shrink, Green / [0.7 - 2.4 MM2]
-27									TUBING, Heat Shrinkable
	05135848AA	1	2, 3, 6, 7	L		EG2, EXM	DGZ		Red / [2.0 - 4.0 MM2]
	05135849AA	1	2, 3, 6, 7	L		EG2, EXM	DGZ		Blue / [3.5 - 8.0 MM2]
	05135850AA	1	2, 3, 6, 7	L		EG2, EXM	DGZ		Yellow / [7.5 - 12. MM2]
	05135851AA	1	2, 3, 6, 7	L		EG2, EXM	DGZ		Connector / [0.5 MM2]
	05135852AA	1	2, 3, 6, 7	L		EG2, EXM	DGZ		Connector / [0.8 MM2]
	05135853AA	1	2, 3, 6, 7	L		EG2, EXM	DGZ		Connector / [1.3 MM2]
	05135854AA	1	2, 3, 6, 7	L		EG2, EXM	DGZ		Connector / [2.0 MM2]

SPRINTER (VB)

SERIES	LINE	BODY	ENGINE	TRANSMISSION
L = LOWLINE	3 = HD DODGE 2WD 6 = Lt. Duty DODGE 4WD 2 = Med. Duty DODGE 2WD 7 = Med. Duty DODGE 4WD	17 = VAN WHEEL BASE 7 55 = WAGON WHEEL BASE 5 15 = VAN WHEEL BASE 5 53 = 119 WB 13 = 119 WB 05 = CAB CHASSIS WHEEL BASE 5 03 = CAB CHASSIS WHEEL BASE 3	EG2 = 3.5L V6 Gas Engine EXM = 3.0L V6 Turbo Diesel Engine	DGZ = 5-Speed Auto W5A380 Transmission

Throttle Body
Figure 14-602

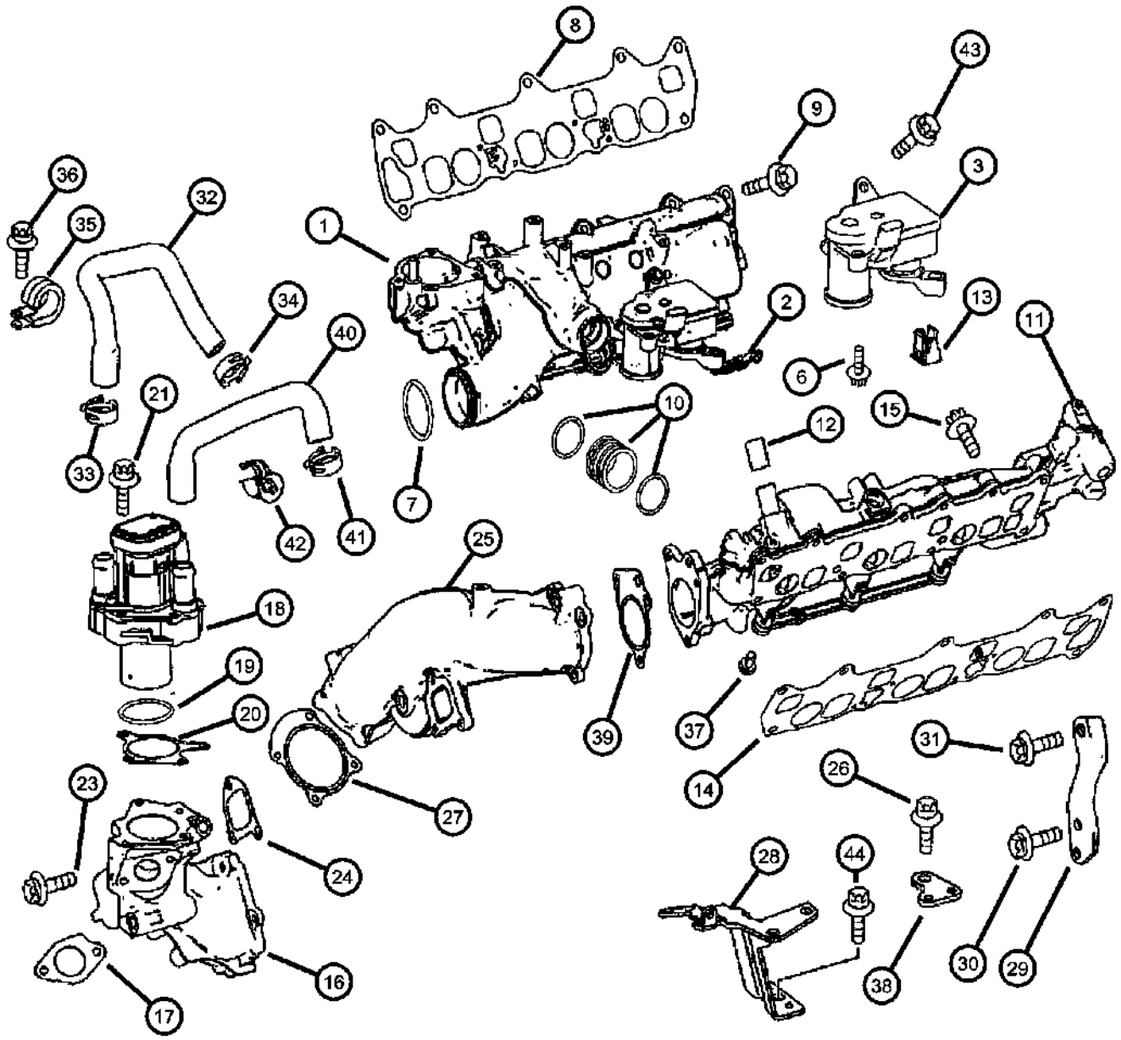

ITEM	PART NUMBER	QTY	LINE	SERIES	BODY	ENGINE	TRANS	TRIM	DESCRIPTION
NOTE:									
Sales Codes:									
[DGZ]=5 Speed Automatic Transmission [W5A380] - [Mercedes Benz]									
[EXM]=3.0L Turbo Diesel V-6 Engine									
1	68012303AA	1	2, 3, 6, 7	L		EXM	DGZ		MANIFOLD, IntakeRight
2	68001951AA	3	2, 3, 6, 7	L		EXM	DGZ		CLIP, Swirl Actuator
3	05175643AB	1	2, 3, 6, 7	L		EXM	DGZ		MOTOR
-4	68011814AA	1	2, 3, 6, 7	L		EXM	DGZ		CONNECTOR, [4 Pin] Connector For Setting Motor
-5	68011878AA	AR	2, 3, 6, 7	L		EG2, EXM	DGZ		TERMINAL, [0.22 - 0.5 MM2]
6	68012305AA	2	2, 3, 6, 7			EXM	DGZ		SCREW, [M6x12]
7	05175644AA	1	2, 3, 6, 7	L		EXM	DGZ		O RING
8	05175645AA	1	2, 3, 6, 7	L		EXM	DGZ		GASKET
9									BOLT
	05073688AB	2	2, 3, 6, 7	L		EXM	DGZ		Braket Mounting [M7x40]
	05073702AA	5	2, 3, 6, 7	L		EXM	DGZ		Charge Air Distributor Line To Head
	05125741AA	1	2, 3, 6, 7	L		EXM	DGZ		[M7x100]
	05175646AA	2	2, 3, 6, 7	L		EXM	DGZ		[M7x70]
10	05175668AA	1	2, 3, 6, 7	L		EXM	DGZ		SLEEVE, Insert
11	68012310AA	1	2, 3, 6, 7	L		EXM	DGZ		MANIFOLD, IntakeLeft
12	68028882AA	1	2, 3, 6, 7	L		EXM	DGZ		CONNECTOR
13	05175673AA	3	2, 3, 6, 7	L		EXM	DGZ		INSERT
14	05175645AA	1	2, 3, 6, 7	L		EXM	DGZ		GASKET
15									BOLT
	05073688AB	4	2, 3, 6, 7	L		EXM	DGZ		[M7X40]
	05073702AA	3	2, 3, 6, 7	L		EXM	DGZ		
	05175646AA	3	2, 3, 6, 7	L		EXM	DGZ		[M7x70]
16	68014081AA	1	2, 3, 6, 7	L		EXM	DGZ		HOUSING, Exhaust Gas Resirculation Valve
17	05175695AA	1	2, 3, 6, 7	L		EXM	DGZ		GASKET
18	68014083AA	1	2, 3, 6, 7	L		EXM	DGZ		VALVE, EGR
19	68001387AA	1	2, 3, 6, 7	L		EXM	DGZ		GASKET, EGR Valve, Exhaust Gas Recirculation Valve O-Ring
20	68014085AA	1	2, 3, 6, 7	L		EXM	DGZ		GASKET, Valve To Housing

SPRINTER (VB)

SERIES	LINE	BODY	ENGINE	TRANSMISSION
L = LOWLINE	3 = HD DODGE 2WD 6 = Lt. Duty DODGE 4WD 2 = Med. Duty DODGE 2WD 7 = Med. Duty DODGE 4WD	17 = VAN WHEEL BASE 7 55 = WAGON WHEEL BASE 5 15 = VAN WHEEL BASE 5 53 = 119 WB 13 = 119 WB 05 = CAB CHASSIS WHEEL BASE 5 03 = CAB CHASSIS WHEEL BASE 3	EG2 = 3.5L V6 Gas Engine EXM = 3.0L V6 Turbo Diesel Engine	DGZ = 5-Speed Auto W5A380 Transmission

Throttle Body
Figure 14-602

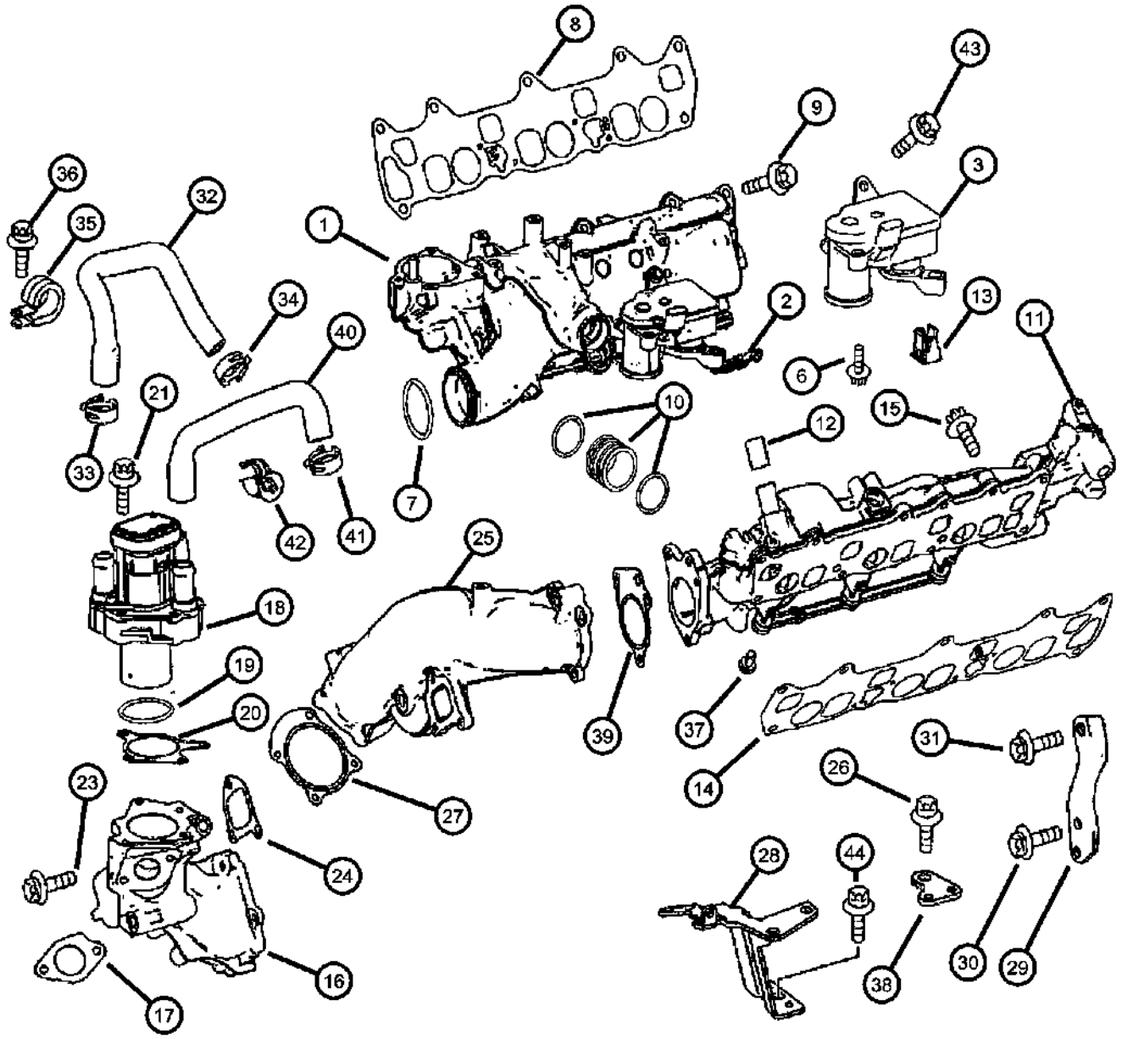

ITEM	PART NUMBER	QTY	LINE	SERIES	BODY	ENGINE	TRANS	TRIM	DESCRIPTION
21	06104683AA	2	2, 3, 6, 7	L		EXM	DGZ		BOLT, 6 Lobe External Head, M6x1.0x23.0, Valve To Distribution Line
-22	06104010AA	4	2, 3, 6, 7	L		EXM	DGZ		BOLT, M6X1.0X40, Valve To Housing
23	06104008AA	3	2, 3, 6, 7	L		EXM	DGZ		SCREW, Valve Body To Charge Air Cross Pipe [M6x30]
24	68014086AA	1	2, 3, 6, 7	L		EXM	DGZ		GASKET
25	68012320AA	1	2, 3, 6, 7	L		EXM	DGZ		MANIFOLD, Intake
26	06104032AA	1	2, 3, 6, 7	L		EXM	DGZ		SCREW, [M8x65]
27	68012326AA	1	2, 3, 6, 7	L		EXM	DGZ		GASKET
28	68012327AA	1	2, 3, 6, 7	L		EXM	DGZ		BRACKET
29	68014087AA	1	2, 3, 6, 7	L		EXM	DGZ		BRACKET
30	06104006AA	1	2, 3, 6, 7	L		EXM	DGZ		BOLT, Torx Socket Head, M6X1.00X20.00
31	06104028AA	1	2, 3, 6, 7	L		EXM	DGZ		SCREW, [M8x45]
32	68014088AA	1	2, 3, 6, 7	L		EXM	DGZ		HOSE
33	06104804AA	1	2, 3, 6, 7	L		EXM	DGZ		CLAMP
34	68004905AA	1	2, 3, 6, 7	L		EG2, EXM	DGZ		CLAMP
35	05132913AA	1	2, 3, 6, 7	L		EXM	DGZ		CLAMP
36	06104005AA	1	2, 3, 6, 7	L		EXM	DGZ		BOLT, 6 Lobe External Head, M6X1.00X16.00
37	68001951AA	3	2, 3, 6, 7	L		EXM	DGZ		CLIP, Swirl Actuator
38	68012324AA	1	2, 3, 6, 7	L		EXM	DGZ		BRACKET, Air Duct
39	68012321AA	1	2, 3, 6, 7	L		EXM	DGZ		GASKET
40	68014091AA	1	2, 3, 6, 7	L		EXM	DGZ		HOSE, HOSE
41	68004905AA	1	2, 3, 6, 7	L		EG2, EXM	DGZ		CLAMP
42	68014090AA	1	2, 3, 6, 7	L		EXM	DGZ		CLIP, CLIP
43	06104683AA	2	2, 3, 6, 7	L		EXM	DGZ		BOLT, 6 Lobe External Head, M6x1.0x23.0
44	06104004AA	1	2, 3, 6, 7	L	13, 15, 17, 53, 55	EXM	DGZ		BOLT, [M6x12]

SPRINTER (VB)

SERIES	LINE	BODY	ENGINE	TRANSMISSION
L = LOWLINE	3 = HD DODGE 2WD 6 = Lt. Duty DODGE 4WD 2 = Med. Duty DODGE 2WD 7 = Med. Duty DODGE 4WD	17 = VAN WHEEL BASE 7 55 = WAGON WHEEL BASE 5 15 = VAN WHEEL BASE 5 53 = 119 WB 13 = 119 WB 05 = CAB CHASSIS WHEEL BASE 5 03 = CAB CHASSIS WHEEL BASE 3	EG2 = 3.5L V6 Gas Engine EXM = 3.0L V6 Turbo Diesel Engine	DGZ = 5-Speed Auto W5A380 Transmission

Air Cleaner and Related
Figure 14-805

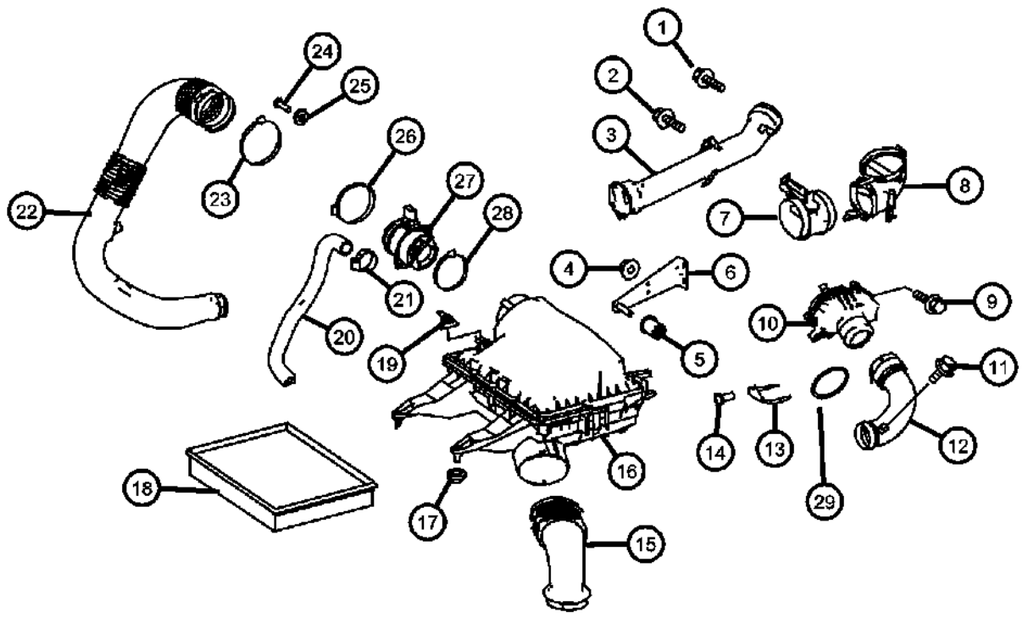

ITEM	PART NUMBER	QTY	LINE	SERIES	BODY	ENGINE	TRANS	TRIM	DESCRIPTION
1									BOLT, 6 Lobe External Head, M6X1.00X16.00
	06104005AA	3	2, 3, 6, 7	L		EG2	DGZ		
		3	2, 3, 6, 7	L		EXM	DGZ		
2									SCREW, Hex Flange Head
	06104121AA	2	3, 7	L	03, 05	EG2, EXM	DGZ		M6x10
		2	2, 3, 6, 7	L	13, 15, 17, 53, 55	EG2, EXM	DGZ		M6x10
3	68012331AA	1	2, 3, 6, 7	L		EXM	DGZ		HOSE, Air Cleaner
4									NUT
	68004878AA	4	3, 7	L	03, 05	EG2, EXM	DGZ		Bracket to Firewall M6
		4	2, 3, 6, 7	L	13, 15, 17, 53, 55	EG2, EXM	DGZ		Bracket to Firewall M6
5	68013677AA	2	2, 3, 6, 7	L		EG2, EXM	DGZ		GROMMET
6	68013680AA	2	2, 3, 6, 7	L		EG2, EXM	DGZ		BRACKET, Air Cleaner
7	68011734AA	1	2, 3, 6, 7	L		EG2	DGZ		SENSOR, Mass Airflow
8	68011736AA	1	2, 3, 6, 7	L		EG2	DGZ		HOUSING, Air Duct
9									BOLT, 6 Lobe External Head, M6X1.00X16.00
	06104005AA	3	2, 3, 6, 7	L		EG2	DGZ		
		3	2, 3, 6, 7	L		EXM	DGZ		
10	68012338AA	1	2, 3, 6, 7	L		EXM	DGZ		RESONATOR, Turbo
11									BOLT, 6 Lobe External Head, M6X1.00X16.00
	06104005AA	3	2, 3, 6, 7	L		EG2	DGZ		
		3	2, 3, 6, 7	L		EXM	DGZ		
12	68012330AA	1	2, 3, 6, 7	L		EXM	DGZ		HOSE, Charge Air
13	68012339AA	1	2, 3, 6, 7	L		EXM	DGZ		BRACKET, Muffler to Charge Air Manifold
14									SCREW
	06104633AA	1	3, 7	L	03, 05	EXM	DGZ		Noise Silencer to Bracket 5x12
		1	2, 3, 6, 7	L	13, 15, 17, 53, 55	EXM	DGZ		Noise Silencer to Bracket 5x12
15	68013681AA	1	2, 3, 6, 7	L		EG2, EXM	DGZ		HOSE, Air Cleaner
16									AIR CLEANER
	68013675AA	1	2, 3, 6, 7	L		EG2	DGZ		

SPRINTER (VB)

SERIES	LINE	BODY	ENGINE	TRANSMISSION
L = LOWLINE	3 = HD DODGE 2WD 6 = Lt. Duty DODGE 4WD 2 = Med. Duty DODGE 2WD 7 = Med. Duty DODGE 4WD	17 = VAN WHEEL BASE 7 55 = WAGON WHEEL BASE 5 15 = VAN WHEEL BASE 5 53 = 119 WB 13 = 119 WB 05 = CAB CHASSIS WHEEL BASE 5 03 = CAB CHASSIS WHEEL BASE 3	EG2 = 3.5L V6 Gas Engine EXM = 3.0L V6 Turbo Diesel Engine	DGZ = 5-Speed Auto W5A380 Transmission

Air Cleaner and Related
Figure 14-805

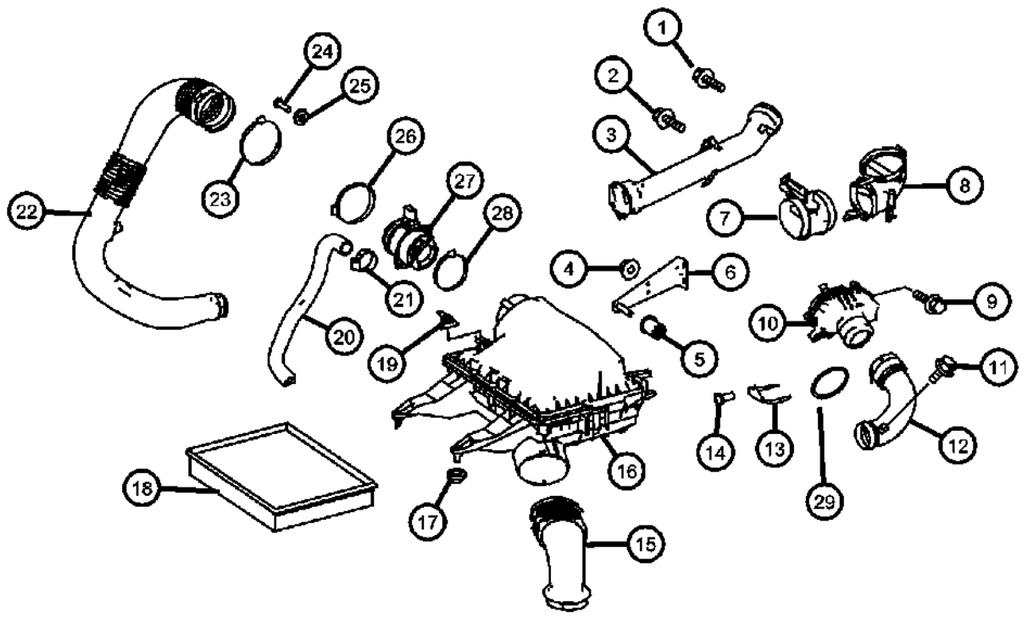

ITEM	PART NUMBER	QTY	LINE	SERIES	BODY	ENGINE	TRANS	TRIM	DESCRIPTION
	68017656AA	1	2, 3, 6, 7	L		EXM	DGZ		
17	05099283AA	2	2, 3, 6, 7	L		EG2, EXM	DGZ		GROMMET, Air Cleaner to Frame
18	68013676AA	1	2, 3, 6, 7	L		EG2, EXM	DGZ		FILTER, Air
19									SENSOR, Air Pressure
	05101120AB	1	2, 3, 6, 7	L		EG2	DGZ		
		1	2, 3, 6, 7	L		EXM	DGZ		
20	68013679AA	1	2, 3, 6, 7	L		EG2	DGZ		HOSE, Secondary Air Pump to Air Filter
21	06104783AA	1	2, 3, 6, 7	L		EG2	DGZ		CLAMP, Hose
22									HOSE, Air Cleaner
	68013682AA	1	2, 3, 6, 7	L		EXM	DGZ		
	68013683AA	1	2, 3, 6, 7	L		EG2	DGZ		
23	06104790AA	1	2, 3, 6, 7	L		EG2	DGZ		CLAMP, Clean Air Line to Mass Air Flow Sensor 80-100MM
24									SCREW, Tapping Round Head, M5.0X2.24X20.00
	06104635AA	2	3, 7	L	03, 05	EG2, EXM	DGZ		Mass Air Flow Sensor to Filter 5x20
		2	2, 3, 6, 7	L	13, 15, 17, 53, 55	EG2, EXM	DGZ		Mass Air Flow Sensor to Filter 5x20
25	68013678AA	2	2, 3, 6, 7	L		EG2	DGZ		WASHER
26	68013678AA	2							CLAMP, (NOT SERVICED)
27	68017661AA	1	2, 3, 6, 7	L		EXM	DGZ		SENSOR, Mass Airflow
28	06104788AA	1	2, 3, 6, 7	L		EXM	DGZ		CLAMP, Hose, Clean Air Duct 60-80MM
29	68020380AA	1	2, 3, 6, 7	L		EXM	DGZ		GASKET, Air Inlet

SPRINTER (VB)

SERIES	LINE	BODY	ENGINE	TRANSMISSION
L = LOWLINE	3 = HD DODGE 2WD 6 = Lt. Duty DODGE 4WD 2 = Med. Duty DODGE 2WD 7 = Med. Duty DODGE 4WD	17 = VAN WHEEL BASE 7 55 = WAGON WHEEL BASE 5 15 = VAN WHEEL BASE 5 53 = 119 WB 13 = 119 WB 05 = CAB CHASSIS WHEEL BASE 5 03 = CAB CHASSIS WHEEL BASE 3	EG2 = 3.5L V6 Gas Engine EXM = 3.0L V6 Turbo Diesel Engine	DGZ = 5-Speed Auto W5A380 Transmission

Accelerator Pedal and Related
Figure 14-1005

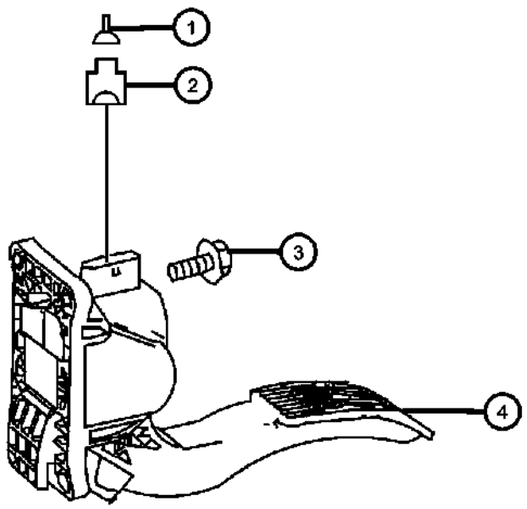

ITEM	PART NUMBER	QTY	LINE	SERIES	BODY	ENGINE	TRANS	TRIM	DESCRIPTION
1	68011050AA	AR	2, 3, 6, 7	L		EG2	DGZ		GASKET, Yellow B37/3
2	68011246AA	1	2, 3, 6, 7	L		EG2, EXM	DGZ		CONNECTOR, Accelerator Module [6-Pol;B37/3]
3	06104006AA	3	2, 3, 6, 7	L		EXM	DGZ		BOLT, Torx Socket Head, M6X1.00X20.00
4	68013463AA	1	2, 3, 6, 7	L		EG2, EXM	DGZ		PEDAL, Accelerator

SPRINTER (VB)

SERIES	LINE	BODY	ENGINE	TRANSMISSION
L = LOWLINE	3 = HD DODGE 2WD 6 = Lt. Duty DODGE 4WD 2 = Med. Duty DODGE 2WD 7 = Med. Duty DODGE 4WD	17 = VAN WHEEL BASE 7 55 = WAGON WHEEL BASE 5 15 = VAN WHEEL BASE 5 53 = 119 WB 13 = 119 WB 05 = CAB CHASSIS WHEEL BASE 5 03 = CAB CHASSIS WHEEL BASE 3	EG2 = 3.5L V6 Gas Engine EXM = 3.0L V6 Turbo Diesel Engine	DGZ = 5-Speed Auto W5A380 Transmission

Group - 17
Rear Suspension

Group - 17 Rear Suspension

Illustration Title — Group-Fig. No.

Rear Suspension and Cradle
Suspension,Rear,FWD/RWD/AWD ..... Fig. 17 - 105

Rear Stabilizer Bar
Stabilizer Bar,Rear,FWD/RWD,AWD ..... Fig. 17 - 205
Stabilizer Bar,Rear,FWD/RWD,AWD ..... Fig. 17 - 206

017-100 Rear Suspension and Cradle	**017-200** Rear Stabilizer Bar		

Suspension,Rear,FWD/RWD/AWD
Figure 17-105

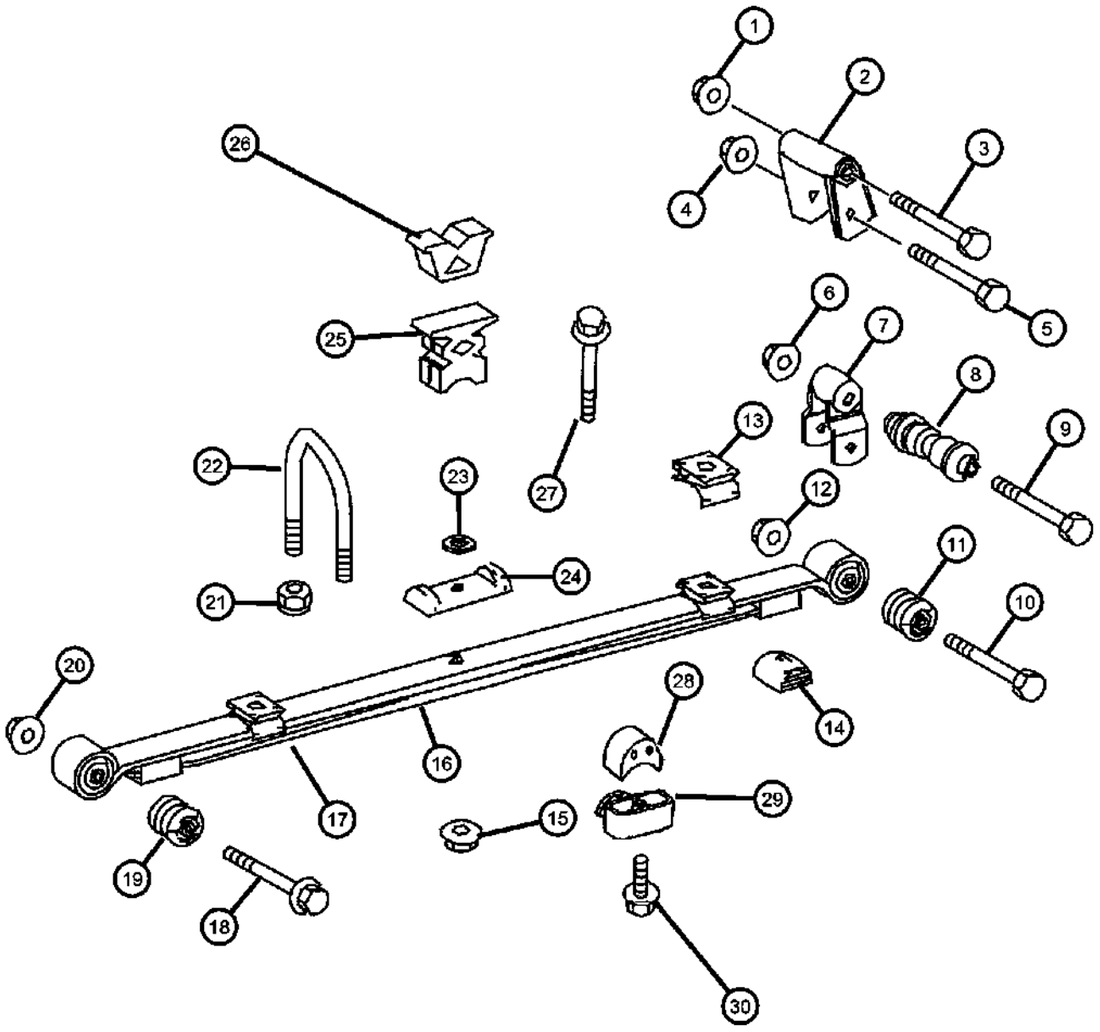

ITEM	PART NUMBER	QTY	LINE	SERIES	BODY	ENGINE	TRANS	TRIM	DESCRIPTION
Note:Rear Leaf Spring Bushing Only Serviced For [3500] Series Sprinter. For [2500] Must Order Rear Leaf Spring									
1									NUT
	06105171AA	2	3, 7	L	03, 05	EG2, EXM	DGZ		M12x1.5
		2	2, 3, 6, 7	L	13, 15, 17, 53, 55	EG2, EXM	DGZ		M12x1.5
2	68013793AA	2	2, 3, 6, 7	L		EG2, EXM	DGZ		SHACKLE, Spring
3									BOLT
	05118734AA	2	3, 7	L	03, 05	EG2, EXM	DGZ		
		2	2, 6	L	13, 15, 17, 53, 55	EG2	DGZ		
4									NUT
	06105171AA	2	3, 7	L	03, 05	EG2, EXM	DGZ		M12x1.5
		2	2, 3, 6, 7	L	13, 15, 17, 53, 55	EG2, EXM	DGZ		M12x1.5
5									BOLT
	05125718AA	2	3, 7	L	03, 05	EG2, EXM	DGZ		Spring Shackle
		2	2, 6	L	13, 15, 17, 53, 55	EG2	DGZ		Spring Shackle
6									NUT
	06105170AA	2	3, 7	L	03, 05	EG2, EXM	DGZ		M12x1.5
		2	3, 7	L	13, 15, 17, 53, 55	EXM	DGZ		M12x1.5
7									SHACKLE, Spring
	05118655AA	2	3, 7	L	03, 05	EG2, EXM	DGZ		
		2	3, 7	L	13, 15, 17, 53, 55	EXM	DGZ		
8									BUSHING, Spring
	05118729AA	2	3, 7	L	03, 05	EG2, EXM	DGZ		
		2	3, 7	L	13, 15, 17, 53, 55	EXM	DGZ		
9	06104285AA	2	3, 7	L		EG2, EXM	DGZ		BOLT
10									BOLT
	05125718AA	2	3, 7	L	03, 05	EG2, EXM	DGZ		
		2	2, 6	L	13, 15, 17, 53, 55	EG2	DGZ		
11									BUSHING, Spring

SPRINTER (VB)

SERIES	LINE	BODY	ENGINE	TRANSMISSION
L = LOWLINE	3 = HD DODGE 2WD 6 = Lt. Duty DODGE 4WD 2 = Med. Duty DODGE 2WD 7 = Med. Duty DODGE 4WD	17 = VAN WHEEL BASE 7 55 = WAGON WHEEL BASE 5 15 = VAN WHEEL BASE 5 53 = 119 WB 13 = 119 WB 05 = CAB CHASSIS WHEEL BASE 5 03 = CAB CHASSIS WHEEL BASE 3	EG2 = 3.5L V6 Gas Engine EXM = 3.0L V6 Turbo Diesel Engine	DGZ = 5-Speed Auto W5A380 Transmission

Suspension,Rear,FWD/RWD/AWD
Figure 17-105

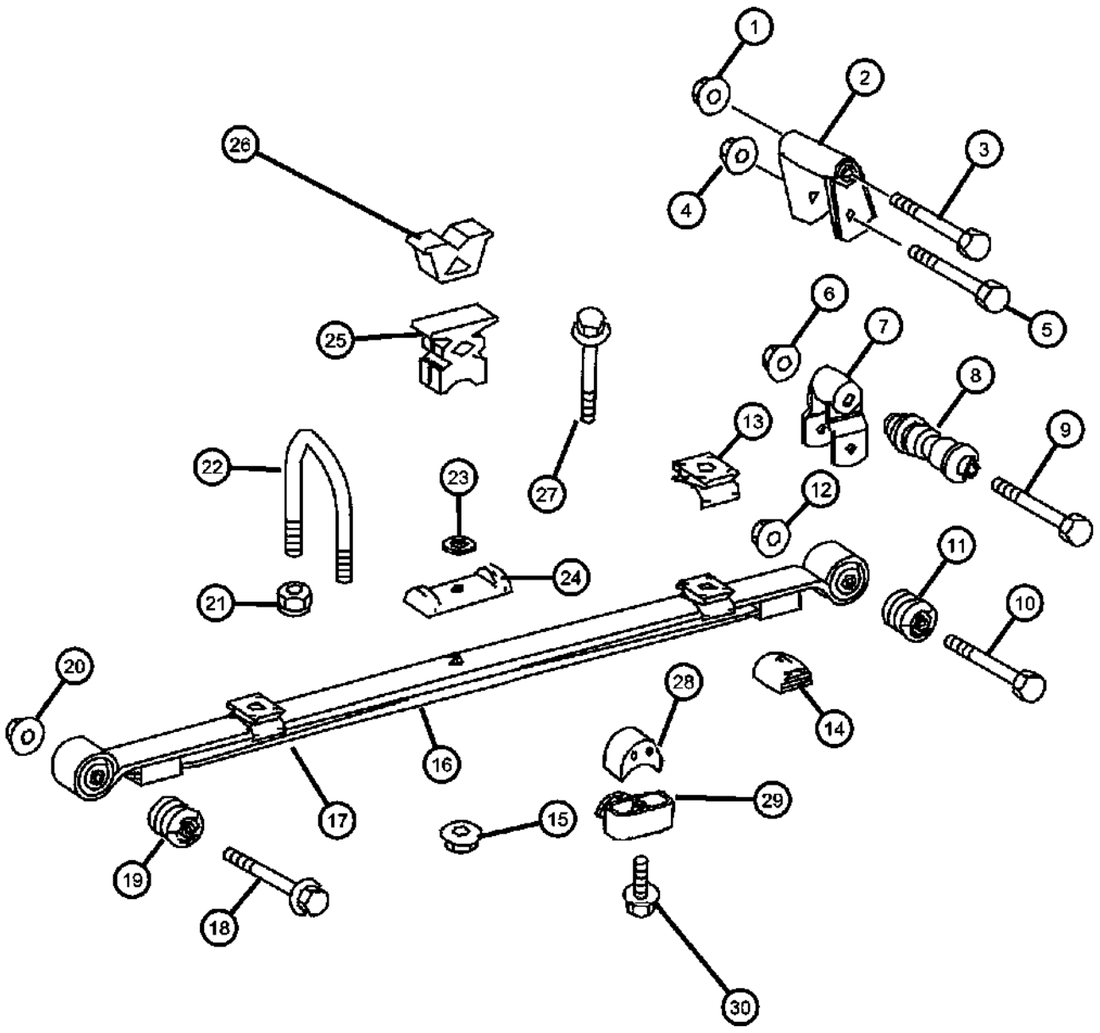

ITEM	PART NUMBER	QTY	LINE	SERIES	BODY	ENGINE	TRANS	TRIM	DESCRIPTION
	05118703AA	2	3, 7	L	03, 05	EG2, EXM	DGZ		Only For [3500] Series / See Note
		2	3, 7	L	13, 15, 17, 53, 55	EXM	DGZ		Only For [3500] Series / See Note
12									NUT
	06105171AA	2	3, 7	L	03, 05	EG2, EXM	DGZ		M12x1.5
		2	2, 3, 6, 7	L	13, 15, 17, 53, 55	EG2, EXM	DGZ		M12x1.5
13									RETAINER, Spring
	68017217AA	4	3, 7	L	03, 05	EG2, EXM	DGZ		With [3AT + XCB]
		4	2, 6	L	13, 15, 17, 53, 55	EG2, EXM	DGZ		With [XCB]
14	68013791AA	4	3, 7	L	03, 05, 13, 15, 17	EG2, EXM	DGZ		BUMPER, Jounce
15									NUT
	06105170AA	2	3, 7	L	03, 05	EG2, EXM	DGZ		M10
		2	2, 3, 6, 7	L	13, 15, 17, 53, 55	EG2, EXM	DGZ		M10
16									SPRING, Rear
	68020668AA	2	3, 7	L	03, 05	EG2, EXM	DGZ		With [XZB]
	68013784AA	2	2, 6	L	13, 15, 17, 53, 55	EG2, EXM	DGZ		One Leaf
	68013785AA	2	3, 7	L	03, 05	EG2, EXM	DGZ		With [Z2C]
		2	3, 7	L	13, 15, 17	EXM	DGZ		With [Z2C And / Or Z2B]
	68013786AA	2	3, 7	L	03, 05, 13, 15, 17	EG2, EXM	DGZ		With [SNB]
	68013788AA	2	3, 7	L	03, 05, 13, 15, 17	EG2, EXM	DGZ		With [Z2D]
17									SPRING, Rear Leaf
	68013781AA	2	2, 6	L	13, 15, 17	EG2, EXM	DGZ		
	68017214AA	2	2, 6	L	13, 15, 17	EG2, EXM	DGZ		With [3AT + XCB]
18	06104247AA	2	2, 6	L		EG2, EXM	DGZ		BOLT
19									BUSHING, Spring
	05118729AA	2	3, 7	L	03, 05	EG2, EXM	DGZ		Front
		2	3, 7	L	13, 15, 17, 53, 55	EXM	DGZ		Front
	68013792AA	4	2, 3, 6, 7	L		EG2, EXM	DGZ		Front

SPRINTER (VB)

SERIES	LINE	BODY	ENGINE	TRANSMISSION
L = LOWLINE	3 = HD DODGE 2WD 6 = Lt. Duty DODGE 4WD 2 = Med. Duty DODGE 2WD 7 = Med. Duty DODGE 4WD	17 = VAN WHEEL BASE 7 55 = WAGON WHEEL BASE 5 15 = VAN WHEEL BASE 5 53 = 119 WB 13 = 119 WB 05 = CAB CHASSIS WHEEL BASE 5 03 = CAB CHASSIS WHEEL BASE 3	EG2 = 3.5L V6 Gas Engine EXM = 3.0L V6 Turbo Diesel Engine	DGZ = 5-Speed Auto W5A380 Transmission

Suspension,Rear,FWD/RWD/AWD
Figure 17-105

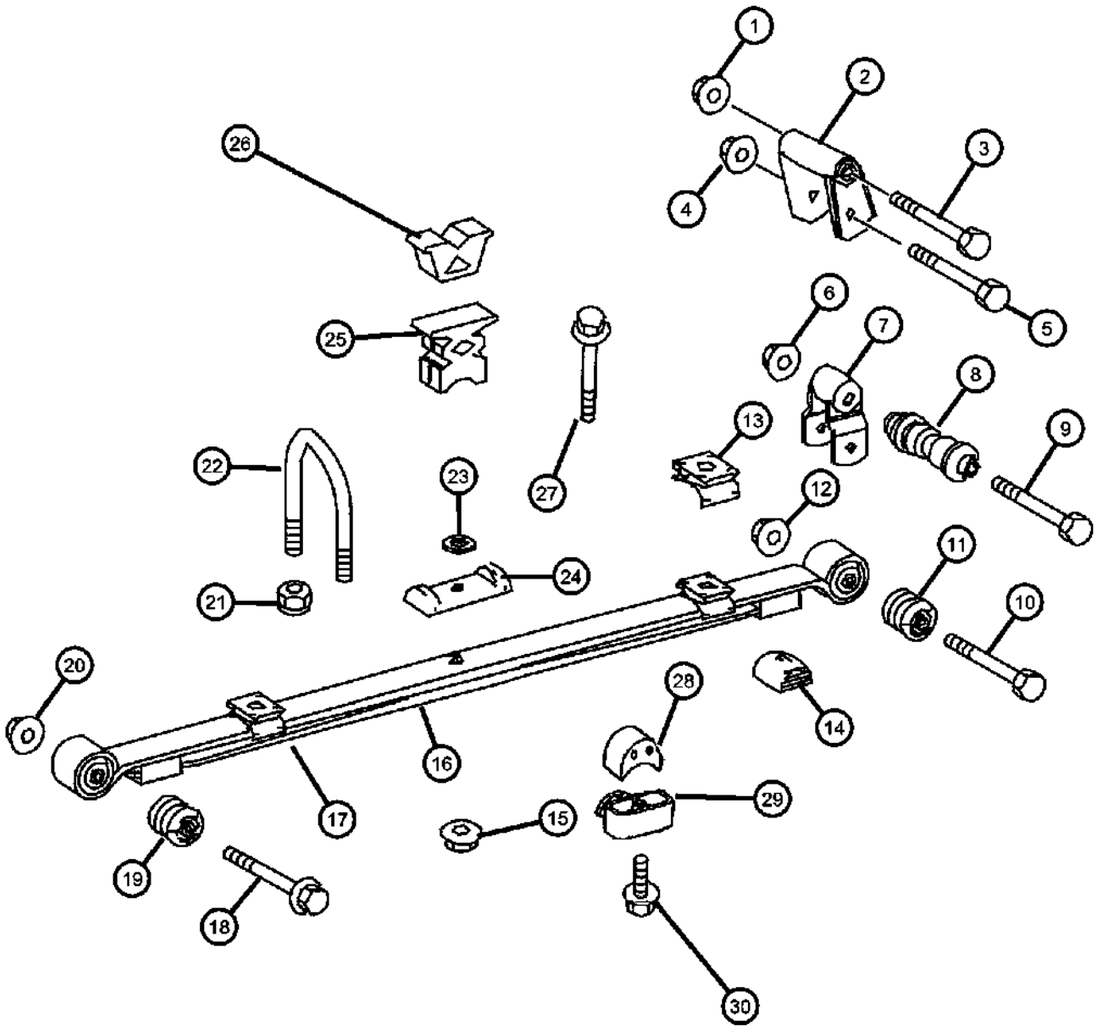

ITEM	PART NUMBER	QTY	LINE	SERIES	BODY	ENGINE	TRANS	TRIM	DESCRIPTION
20									NUT
	06105171AA	2	3, 7	L	03, 05	EG2, EXM	DGZ		M12x1.5
		2	2, 3, 6, 7	L	13, 15, 17, 53, 55	EG2, EXM	DGZ		M12x1.5
	06105173AA	2	3, 7	L		EG2, EXM	DGZ		
21									NUT
	05103727AA	8	3, 7	L	03, 05	EG2, EXM	DGZ		U-Bolt
		8	2, 3, 6, 7	L	13, 15, 17, 53, 55	EG2, EXM	DGZ		U-Bolt
22	05118765AA	4	3, 7	L	03, 05	EG2, EXM	DGZ		U-BOLT, With [Z2D+XZB]
23	05118765AA	4							WASHER, (NOT SERVICED)
24									PLATE, Rear Spring U-Bolt
	68013794AA	2	2, 6	L		EG2, EXM	DGZ		
	68013795AA	2	3, 7	L		EG2, EXM	DGZ		
25									BUMPER, Jounce
	05118759AA	2	3, 7	L		EG2, EXM	DGZ		Spring Stop
	05128586AA	2	2, 6	L		EG2, EXM	DGZ		Spring Stop
26	68023905AA	1	2, 3, 6, 7	L		EG2, EXM	DGZ		BUMPER, Spring, Rear
27									BOLT, Spring
	68013789AA	2	3, 7	L	03, 05	EG2, EXM	DGZ		
		2	3, 7	L	13, 15, 17, 53, 55	EXM	DGZ		
	68017219AA	2	3, 7	L	03, 05	EG2, EXM	DGZ		With [XZB]
28	68017223AA	2	3	L	05	EG2, EXM	DGZ		BUMPER, Jounce, With [2MR]
29	68017225AA	2	3	L	05	EG2, EXM	DGZ		BUMPER, Jounce, With [2MR]
30	68017226AA	4	3	L	05	EG2, EXM	DGZ		SCREW

SPRINTER (VB)

SERIES	LINE	BODY	ENGINE	TRANSMISSION
L = LOWLINE	3 = HD DODGE 2WD 6 = Lt. Duty DODGE 4WD 2 = Med. Duty DODGE 2WD 7 = Med. Duty DODGE 4WD	17 = VAN WHEEL BASE 7 55 = WAGON WHEEL BASE 5 15 = VAN WHEEL BASE 5 53 = 119 WB 13 = 119 WB 05 = CAB CHASSIS WHEEL BASE 5 03 = CAB CHASSIS WHEEL BASE 3	EG2 = 3.5L V6 Gas Engine EXM = 3.0L V6 Turbo Diesel Engine	DGZ = 5-Speed Auto W5A380 Transmission

Stabilizer Bar,Rear,FWD/RWD,AWD
Figure 17-205

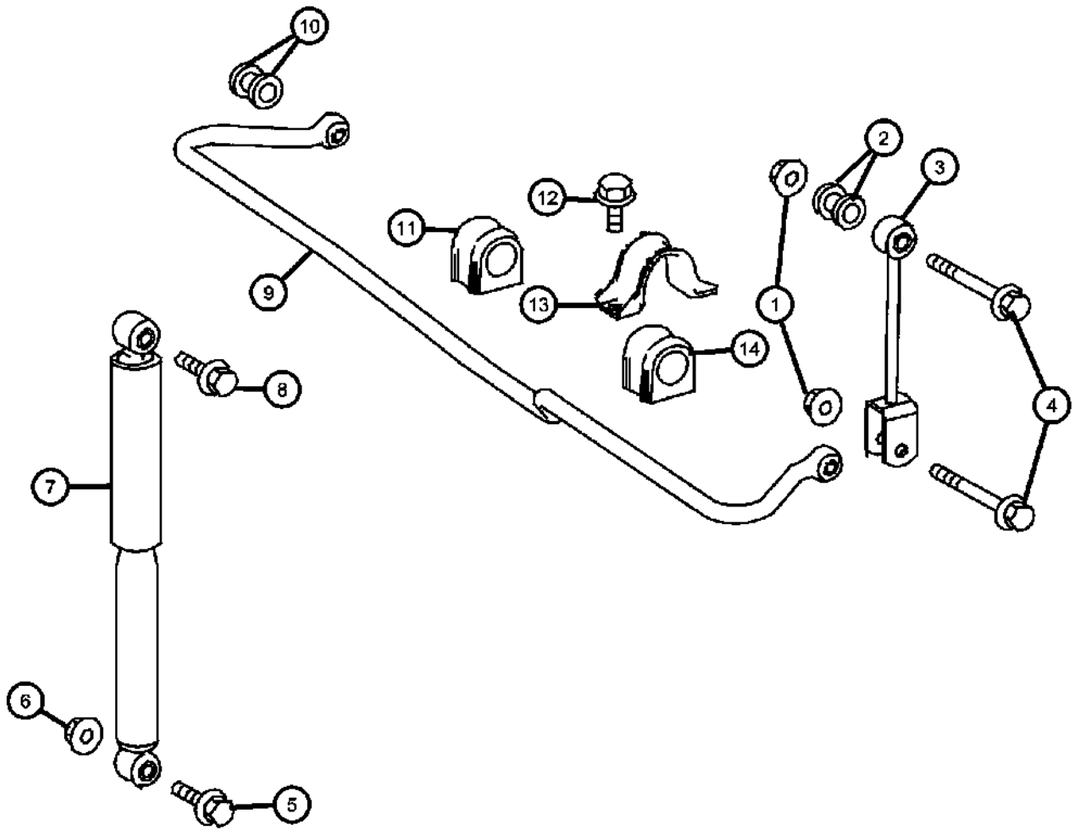

ITEM	PART NUMBER	QTY	LINE	SERIES	BODY	ENGINE	TRANS	TRIM	DESCRIPTION
1	06105171AA	2	2, 6	L	13, 15, 17, 53, 55	EG2	DGZ		NUT
2	05103955AB	2	2, 3, 6, 7	L		EG2, EXM	DGZ		BUSHING, Stabilizer Bar
3	68013817AA	2	2, 6	L	13, 15, 17, 53, 55	EG2, EXM	DGZ		LINK, Stabilizer Bar
4									SCREW
	06104239AA	4	2, 6	L	13, 15, 17, 53, 55	EG2, EXM	DGZ		Torsion Bar To Link
	06104249AA	2	2, 6	L	13, 15, 17, 53, 55	EG2, EXM	DGZ		Link To Frame
5	06104241AB	2	2, 6	L	13, 15, 17, 53, 55	EG2	DGZ		BOLT AND WASHER, Hex head, M8x1.25x16.00, Shock Absorber To Rear Axle
6	06105171AA	2	2, 3, 6, 7	L	13, 15, 17, 53, 55	EG2, EXM	DGZ		NUT, M12x1.5
7	68013825AA	2	2, 6	L	13, 15, 17, 53, 55	EG2, EXM	DGZ		SHOCK ABSORBER, Suspension, Rear
8	06104267AA	2	2, 3, 6, 7	L		EG2, EXM	DGZ		SCREW
9	68013798AA	1	2, 6	L	13, 15, 17, 53, 55	EG2, EXM	DGZ		STABILIZER BAR, Rear Suspension, With [SHC]
10	05103955AB	2	2, 3, 6, 7	L		EG2, EXM	DGZ		BUSHING, Stabilizer Bar
11	68013812AA	2	2, 6	L	13, 15, 17, 53, 55	EG2, EXM	DGZ		BUSHING, Stabilizer Bar
12	68013815AA	4	2, 3, 6, 7	L		EG2, EXM	DGZ		SCREW
13	68013719AA	2	2, 3, 6, 7	L		EG2, EXM	DGZ		RETAINER, Stabilizer Bar Grommet
14	68013812AA	2	2, 6	L	13, 15, 17, 53, 55	EG2, EXM	DGZ		BUSHING, Stabilizer Bar

SPRINTER (VB)

SERIES	LINE	BODY	ENGINE	TRANSMISSION
L = LOWLINE	3 = HD DODGE 2WD 6 = Lt. Duty DODGE 4WD 2 = Med. Duty DODGE 2WD 7 = Med. Duty DODGE 4WD	17 = VAN WHEEL BASE 7 55 = WAGON WHEEL BASE 5 15 = VAN WHEEL BASE 5 53 = 119 WB 13 = 119 WB 05 = CAB CHASSIS WHEEL BASE 5 03 = CAB CHASSIS WHEEL BASE 3	EG2 = 3.5L V6 Gas Engine EXM = 3.0L V6 Turbo Diesel Engine	DGZ = 5-Speed Auto W5A380 Transmission

Stabilizer Bar,Rear,FWD/RWD,AWD
Figure 17-206

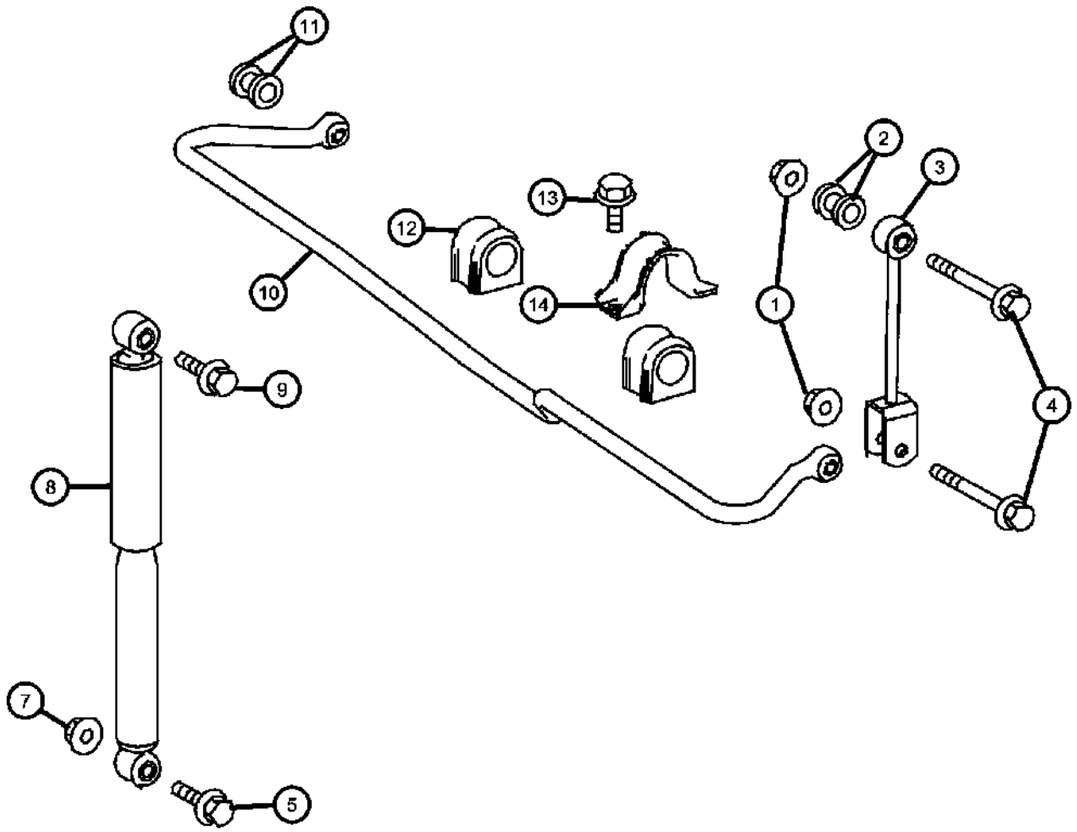

ITEM	PART NUMBER	QTY	LINE	SERIES	BODY	ENGINE	TRANS	TRIM	DESCRIPTION
1	06105171AA	2	3, 7	L	03, 05	EG2, EXM	DGZ		NUT
2	05103955AB	2	2, 3, 6, 7	L		EG2, EXM	DGZ		BUSHING, Stabilizer Bar
3	68013818AA	2	3, 7	L	03, 05, 13, 15, 17	EG2, EXM	DGZ		LINK, Stabilizer Bar
4									BOLT, Hex Flange Head, M14x1.50x40.00
	06104257AA	2	3, 7	L	03, 05	EG2, EXM	DGZ		
		2	2, 3, 6, 7	L	13, 15, 17, 53, 55	EG2, EXM	DGZ		
5									BOLT AND WASHER, Hex head, M8x1.25x16.00
	06104241AB	2	3, 7	L	03, 05	EG2, EXM	DGZ		
		2	3, 7	L	13, 15, 17, 53, 55	EXM	DGZ		
-6	06104263AA	2	3, 7	L		EG2, EXM	DGZ		BOLT, Hex Flange Head, M14X1.50X70.00
7	06105171AA	2	3, 7	L	03, 05	EG2, EXM	DGZ		NUT, M12x1.5
8	68013826AA	2	3, 7	L	03, 05, 13, 15, 17	EG2, EXM	DGZ		SHOCK ABSORBER, Suspension, Rear
9	68013828AA	2	3, 7	L	03, 05, 13, 15, 17	EG2, EXM	DGZ		SCREW
10									STABILIZER BAR, Rear Suspension
	68013801AA	1	3, 7	L	03, 05, 13, 15, 17	EG2, EXM	DGZ		With [SHC]
	68017230AA	1	3, 7	L	03, 05, 13, 15, 17	EG2, EXM	DGZ		With [58C]
11	68013807AA	2	3, 7	L		EG2, EXM	DGZ		BUSHING, Stabilizer Bar
12									BUSHING, Stabilizer Bar
	68013814AA	2	3, 7	L	03, 05, 13, 15, 17	EG2, EXM	DGZ		With [SHC] Sales Codes
	68017240AA	2	3, 7	L		EG2, EXM	DGZ		With [58C] Sales Codes
13									SCREW
	68013815AA	4	2, 3, 6, 7	L		EG2, EXM	DGZ		With [SHC]
	68013816AA	4	3, 7	L	03, 05, 13, 15, 17	EG2, EXM	DGZ		
14	68013811AA	2	3, 7	L	03, 05, 13, 15, 17	EG2, EXM	DGZ		RETAINER, Stabilizer Bar Grommet

SPRINTER (VB)

SERIES	LINE	BODY	ENGINE	TRANSMISSION
L = LOWLINE	3 = HD DODGE 2WD 6 = Lt. Duty DODGE 4WD 2 = Med. Duty DODGE 2WD 7 = Med. Duty DODGE 4WD	17 = VAN WHEEL BASE 7 55 = WAGON WHEEL BASE 5 15 = VAN WHEEL BASE 5 53 = 119 WB 13 = 119 WB 05 = CAB CHASSIS WHEEL BASE 5 03 = CAB CHASSIS WHEEL BASE 3	EG2 = 3.5L V6 Gas Engine EXM = 3.0L V6 Turbo Diesel Engine	DGZ = 5-Speed Auto W5A380 Transmission

Group - 19

Steering

019-100 Steering Wheel	**019-200** Steering Column and Intermediate Shaft	**019-300** Steering Gear	**019-500** Power Steering Pump
019-600 Power Steering Hoses			

Group - 19 Steering

Illustration Title — Group-Fig. No.

Steering Wheel
Steering Wheel Assembly ..... Fig. 19 - 105

Steering Column and Intermediate Shaft
Steering Column ..... Fig. 19 - 205

Steering Gear
Steering Gear - Left Hand Drive ..... Fig. 19 - 305

Power Steering Pump
Power Steering Pump ..... Fig. 19 - 505
Power Steering Pump ..... Fig. 19 - 506

Power Steering Hoses
Hoses, Power Steering ..... Fig. 19 - 605
Hoses, Power Steering ..... Fig. 19 - 610

Steering Wheel Assembly
Figure 19-105

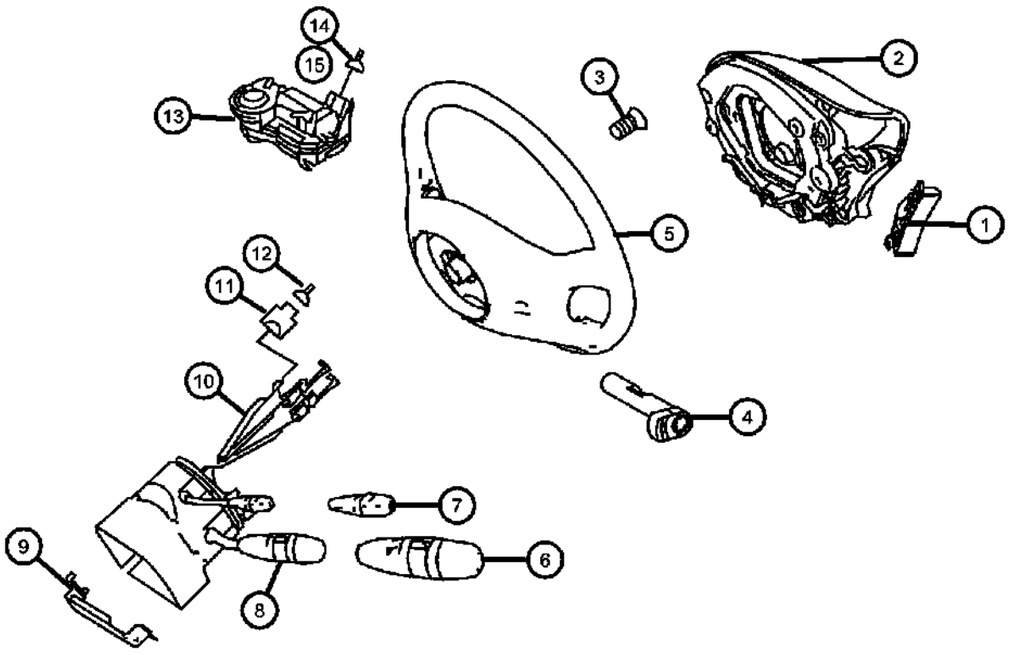

ITEM	PART NUMBER	QTY	LINE	SERIES	BODY	ENGINE	TRANS	TRIM	DESCRIPTION
1	68010427AA	1	2, 3, 6, 7	L		EG2, EXM	DGZ		SWITCH, Steering Wheel, Reconfigurable, One Pair
2									AIR BAG, Driver
	68010423AA	1	2, 3	L		EG2, EXM	DGZ		Dodge with Steering Wheel Controls
	68010426AA	1	2, 3	L		EG2, EXM	DGZ		Dodge without Steering Wheel Controls
	68020911AA	1	6, 7	L		EG2, EXM	DGZ		Freightliner with Steering Wheel Controls
	68020912AA	1	6, 7	L		EG2, EXM	DGZ		Freightliner without Steering Wheel Controls
3									BOLT, BOLT
	04649132AA	1	2, 3, 6, 7	L		EG2, EXM	DGZ		M16
		1	3, 7	L		EG2, EXM	DGZ		M16
4	68010438AA	1	2, 3, 6, 7	L		EG2, EXM	DGZ		PIN
5	68010421AA	1	2, 3, 6, 7	L		EG2, EXM	DGZ		WHEEL, Steering
6	68010446AA	1	2, 3, 6, 7	L		EG2, EXM	DGZ		COVER, Blinker Switch
7	68010447AA	1	2, 3, 6, 7	L		EG2, EXM	DGZ		COVER, Switch
8	68010448AA	1	2, 3, 6, 7	L		EG2, EXM	DGZ		SWITCH, Multifunction
9	68010457AA	1	2, 3, 6, 7	L		EG2, EXM	DGZ		BRACKET, Steering Column
10	68010451AA	1	2, 3, 6, 7	L		EG2, EXM	DGZ		CLOCKSPRING
11									CONNECTOR
	05120717AA	1	3, 7	L		EG2, EXM	DGZ		Jacket Tube Module 3-Pin,COD.A
		1	2, 3, 6, 7	L		EG2, EXM	DGZ		Jacket Tube Module 3-Pin,COD.A
12									TERMINAL
	05103873AA	3	3, 7	L		EG2, EXM	DGZ		0.75MM2 MQS
		3	2, 3, 6, 7	L		EG2, EXM	DGZ		0.75MM2 MQS
13	68010437AA	1	2, 3, 6, 7	L		EG2, EXM	DGZ		MODULE, Steering Control
14	05133370AA	2	2, 3, 6, 7	L		EG2, EXM	DGZ		TERMINAL
15									GASKET
	05120833AA	2	2, 3, 6, 7	L		EG2, EXM	DGZ		1.0-2.5MM;N25/5
	05120858AA	2	2, 3, 6, 7	L		EG2, EXM	DGZ		N26/5

SPRINTER (VB)

SERIES	LINE	BODY	ENGINE	TRANSMISSION
L = LOWLINE	3 = HD DODGE 2WD 6 = Lt. Duty DODGE 4WD 2 = Med. Duty DODGE 2WD 7 = Med. Duty DODGE 4WD	17 = VAN WHEEL BASE 7 55 = WAGON WHEEL BASE 5 15 = VAN WHEEL BASE 5 53 = 119 WB 13 = 119 WB 05 = CAB CHASSIS WHEEL BASE 5 03 = CAB CHASSIS WHEEL BASE 3	EG2 = 3.5L V6 Gas Engine EXM = 3.0L V6 Turbo Diesel Engine	DGZ = 5-Speed Auto W5A380 Transmission

Steering Column
Figure 19-205

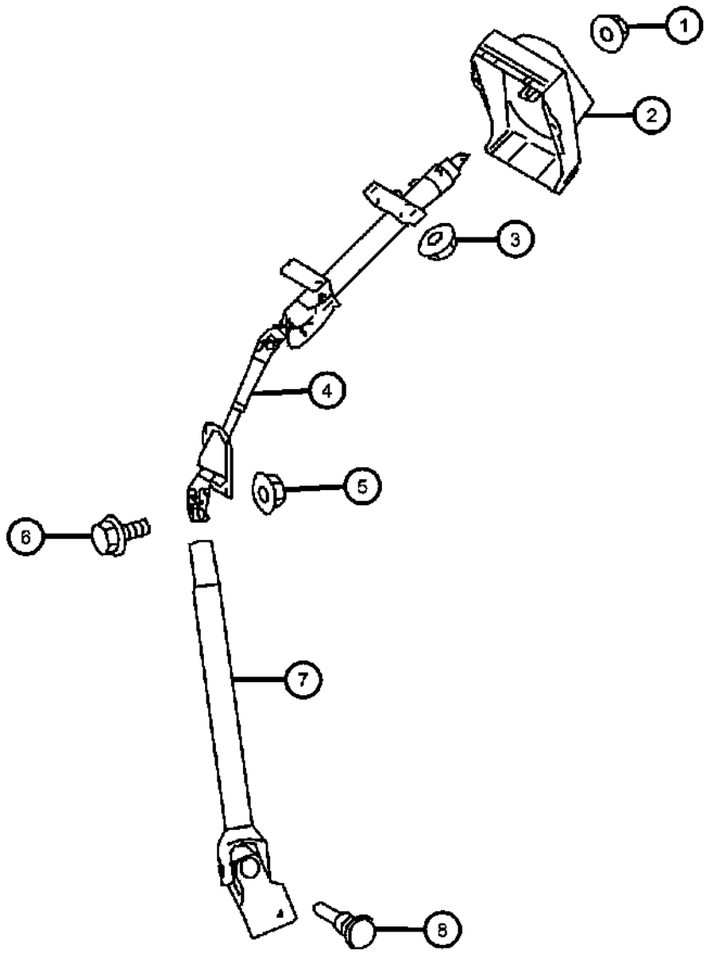

ITEM	PART NUMBER	QTY	LINE	SERIES	BODY	ENGINE	TRANS	TRIM	DESCRIPTION
1									NUT, Hex
	05097674AA	1	3, 7	L		EG2, EXM	DGZ		Fastening for Lining M5
		1	2, 3, 6, 7	L		EG2, EXM	DGZ		Fastening for Lining M5
2	68004807AA	1	2, 3, 6, 7	L		EG2, EXM	DGZ		SHROUD, Steering Column
3									NUT
	06105169AA	4	3, 7	L		EG2, EXM	DGZ		Steering Column to Carrier M8
	68004878AA	4	2, 3, 6, 7	L		EG2, EXM	DGZ		Steering Column to Firewall M6
4	68010429AA	1	2, 3, 6, 7	L		EXM, EG2	DGZ		COLUMN, Steering
5	06105169AA	1	2, 3, 6, 7	L		EG2, EXM	DGZ		NUT
6									SCREW, Steering Column
	68010433AA	1	3, 7	L		EG2, EXM	DGZ		Steering Column to Steering Shaft
		1	2, 3, 6, 7	L		EG2, EXM	DGZ		Steering Column to Steering Shaft
7									SHAFT, Steering Column
	68010431AA	1	3, 7	L		EG2, EXM	DGZ		
		1	2, 3, 6, 7	L		EG2, EXM	DGZ		
8	05125707AA	1	2, 3, 6, 7	L		EG2, EXM	DGZ		SCREW, Steering Column

SPRINTER (VB)

SERIES	LINE	BODY	ENGINE	TRANSMISSION
L = LOWLINE	3 = HD DODGE 2WD 6 = Lt. Duty DODGE 4WD 2 = Med. Duty DODGE 2WD 7 = Med. Duty DODGE 4WD	17 = VAN WHEEL BASE 7 55 = WAGON WHEEL BASE 5 15 = VAN WHEEL BASE 5 53 = 119 WB 13 = 119 WB 05 = CAB CHASSIS WHEEL BASE 5 03 = CAB CHASSIS WHEEL BASE 3	EG2 = 3.5L V6 Gas Engine EXM = 3.0L V6 Turbo Diesel Engine	DGZ = 5-Speed Auto W5A380 Transmission

Steering Gear - Left Hand Drive
Figure 19-305

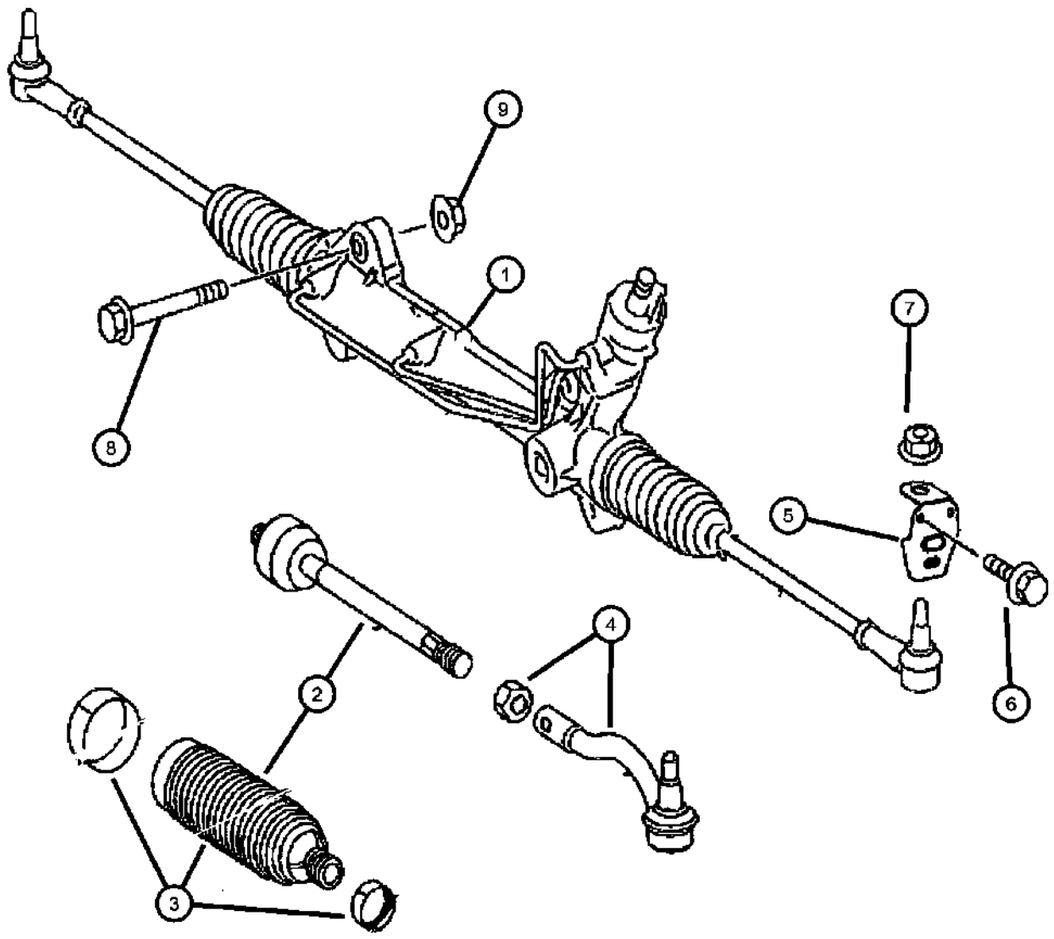

ITEM	PART NUMBER	QTY	LINE	SERIES	BODY	ENGINE	TRANS	TRIM	DESCRIPTION
1	68012180AA	1	2, 3, 6, 7	L		EG2, EXM	DGZ		GEAR, Power Steering
2	68020843AA	2	2, 3, 6, 7	L		EG2, EXM	DGZ		END, Tie Rod, Inner Tie Rod End Package Includes Boot Repair Package [#3]
3	68020844AA	2	2, 3, 6, 7	L		EG2, EXM	DGZ		BOOT, Steering Gear
4	68020845AA	2	2, 3, 6, 7	L		EG2, EXM	DGZ		JOINT
5	68012183AA	2	2, 3, 6, 7	L		EG2, EXM	DGZ		PLATE
6	06104140AA	2	2, 3, 6, 7	L		EG2, EXM	DGZ		SCREW
7	06105172AA	2	2, 3, 6, 7	L		EG2, EXM	DGZ		NUT
8	68012181AA	4	2, 3, 6, 7	L		EG2, EXM	DGZ		BOLT
9	06105171AA	4	2, 3, 6, 7	L		EG2, EXM	DGZ		NUT

SPRINTER (VB)

SERIES	LINE	BODY	ENGINE	TRANSMISSION
L = LOWLINE	3 = HD DODGE 2WD 6 = Lt. Duty DODGE 4WD 2 = Med. Duty DODGE 2WD 7 = Med. Duty DODGE 4WD	17 = VAN WHEEL BASE 7 55 = WAGON WHEEL BASE 5 15 = VAN WHEEL BASE 5 53 = 119 WB 13 = 119 WB 05 = CAB CHASSIS WHEEL BASE 5 03 = CAB CHASSIS WHEEL BASE 3	EG2 = 3.5L V6 Gas Engine EXM = 3.0L V6 Turbo Diesel Engine	DGZ = 5-Speed Auto W5A380 Transmission

Power Steering Pump
Figure 19-505

ITEM	PART NUMBER	QTY	LINE	SERIES	BODY	ENGINE	TRANS	TRIM	DESCRIPTION
1	68006168AA	1	2, 3, 6, 7	L		EG2	DGZ		PUMP, Power Steering
2	06104025AA	2	2, 3, 6, 7	L		EG2	DGZ		BOLT, Hex Flange Head, M8x1.25x30
-3									BOLT
	05136546AA	1	2, 3, 6, 7	L		EG2	DGZ		[M8x25]
	06104697AA	2	2, 3, 6, 7	L		EG2	DGZ		[M8x34]
-4	68006177AA	4	2, 3, 6, 7	L		EG2	DGZ		SCREW, [M8x44]

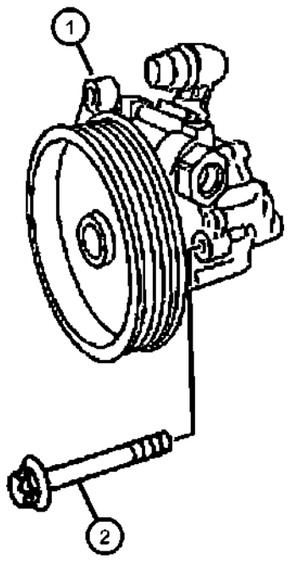

SPRINTER (VB)

SERIES	LINE	BODY	ENGINE	TRANSMISSION
L = LOWLINE	3 = HD DODGE 2WD 6 = Lt. Duty DODGE 4WD 2 = Med. Duty DODGE 2WD 7 = Med. Duty DODGE 4WD	17 = VAN WHEEL BASE 7 55 = WAGON WHEEL BASE 5 15 = VAN WHEEL BASE 5 53 = 119 WB 13 = 119 WB 05 = CAB CHASSIS WHEEL BASE 5 03 = CAB CHASSIS WHEEL BASE 3	EG2 = 3.5L V6 Gas Engine EXM = 3.0L V6 Turbo Diesel Engine	DGZ = 5-Speed Auto W5A380 Transmission

Power Steering Pump
Figure 19-506

ITEM	PART NUMBER	QTY	LINE	SERIES	BODY	ENGINE	TRANS	TRIM	DESCRIPTION
1	68012236AA	1	2, 3, 6, 7	L		EXM	DGZ		PUMP, Power Steering
2	05133207AA	4	2, 3, 6, 7	L		EXM	DGZ		BOLT, [M8x55]
-3	05073723AB	1	2, 3, 6, 7	L		EXM	DGZ		SCREW, [M8x20]

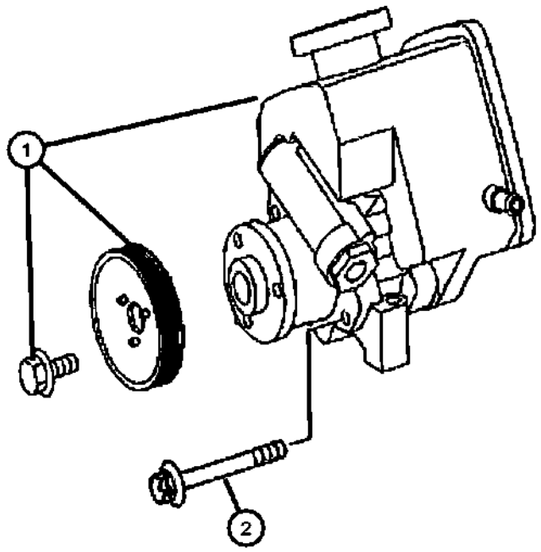

SPRINTER (VB)

SERIES	LINE	BODY	ENGINE	TRANSMISSION
L = LOWLINE	3 = HD DODGE 2WD 6 = Lt. Duty DODGE 4WD 2 = Med. Duty DODGE 2WD 7 = Med. Duty DODGE 4WD	17 = VAN WHEEL BASE 7 55 = WAGON WHEEL BASE 5 15 = VAN WHEEL BASE 5 53 = 119 WB 13 = 119 WB 05 = CAB CHASSIS WHEEL BASE 5 03 = CAB CHASSIS WHEEL BASE 3	EG2 = 3.5L V6 Gas Engine EXM = 3.0L V6 Turbo Diesel Engine	DGZ = 5-Speed Auto W5A380 Transmission

Hoses, Power Steering
Figure 19-605

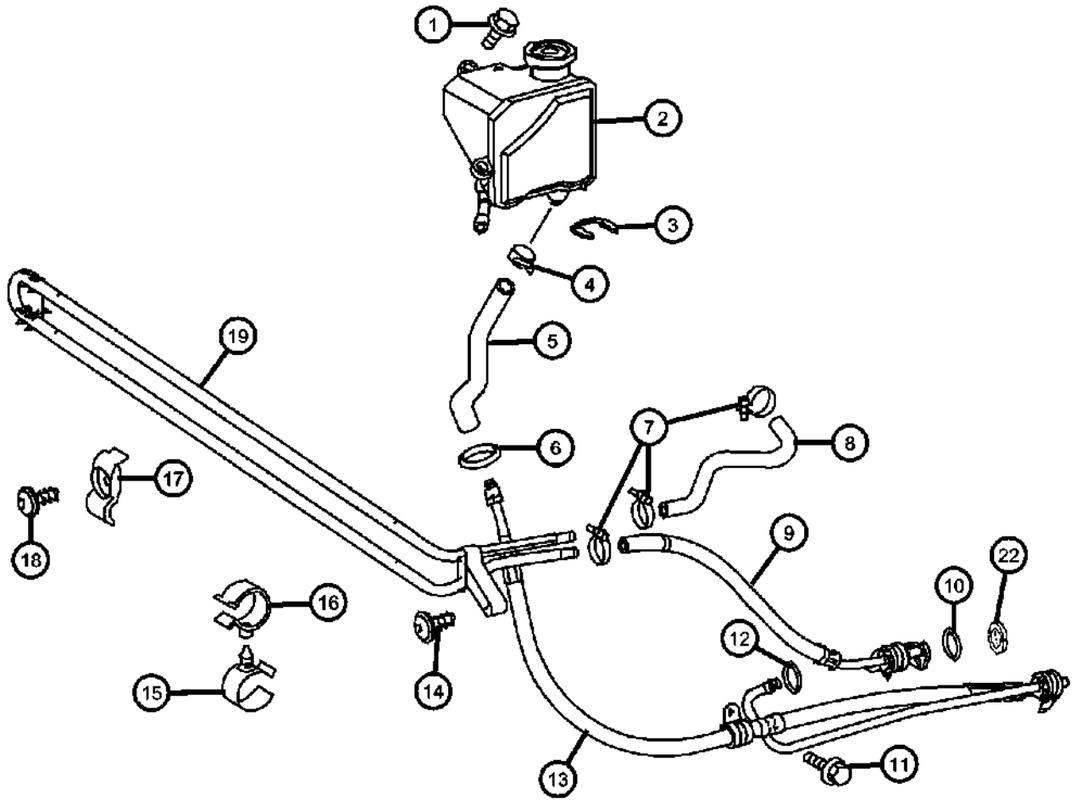

ITEM	PART NUMBER	QTY	LINE	SERIES	BODY	ENGINE	TRANS	TRIM	DESCRIPTION
1	06104683AA	3	2, 3, 6, 7	L		EG2	DGZ		BOLT, 6 Lobe External Head, M6x1.0x23.0
2	68006175AA	1	2, 3, 6, 7	L		EG2	DGZ		RESERVOIR, Power Steering Pump
3	05189055AA	1	2, 3, 6, 7	L		EG2	DGZ		CLIP, Retaining, C Type
4	05189055AA	1							CLAMP, [26MM], (NOT SERVICED)
5	68006678AA	1	2, 3, 6, 7	L		EG2	DGZ		HOSE, Power Steering
6	05183128AA	1	2, 3, 6, 7	L		EG2, EXM	DGZ		O RING
7	05132830AA	1	2, 3, 6, 7	L		EG2, EXM	DGZ		CLAMP
8	68006678AA	1	2, 3, 6, 7	L		EG2	DGZ		HOSE, Power Steering
9									LINE, Power Steering Return
	68006671AA	1	3, 7	L		EG2, EXM	DGZ		
		1	2, 3, 6, 7	L		EG2, EXM	DGZ		
10	68006673AA	1	2, 3, 6, 7	L		EG2, EXM	DGZ		O RING, [7.66x1.78MM]
11	06104022AA	1	2, 3, 6, 7	L		EG2	DGZ		SCREW, [M8x16]
12	68006673AA	1	2, 3, 6, 7	L		EG2, EXM	DGZ		O RING
13	68006668AA	1	2, 3, 6, 7	L		EG2	DGZ		HOSE, Power Steering Pressure
14	68006685AA	4	2, 3, 6, 7	L		EG2, EXM	DGZ		SCREW
15									CLAMP, Brake Hose
	05125887AB	1	3, 7	L		EG2, EXM	DGZ		
		1	2, 3, 6, 7	L		EG2, EXM	DGZ		
16									CLIP, Brake Line
	05117625AA	1	3, 7	L		EG2, EXM	DGZ		
		1	2, 3, 6, 7	L		EG2, EXM	DGZ		
17	68006686AA	1	2, 3, 6, 7	L		EG2, EXM	DGZ		CLAMP
18	68006685AA	4	2, 3, 6, 7	L		EG2, EXM	DGZ		SCREW
19	68006683AA	1	2, 3, 6, 7	L		EG2	DGZ		LINE, Oil Cooler, With [HAB]
-20									NUT
	68004878AA	2	3, 7	L		EG2, EXM	DGZ		
		2	2, 3, 6, 7	L		EG2, EXM	DGZ		
-21	05133476AB	2	2, 3, 6, 7	L		EG2, EXM	DGZ		SCREW, Hex Flange Head, M6x1.00x20.00
22	68006672AA	1	2, 3, 6, 7	L		EG2, EXM	DGZ		O RING, Back Up O Ring

SPRINTER (VB)

SERIES	LINE	BODY	ENGINE	TRANSMISSION
L = LOWLINE	3 = HD DODGE 2WD 6 = Lt. Duty DODGE 4WD 2 = Med. Duty DODGE 2WD 7 = Med. Duty DODGE 4WD	17 = VAN WHEEL BASE 7 55 = WAGON WHEEL BASE 5 15 = VAN WHEEL BASE 5 53 = 119 WB 13 = 119 WB 05 = CAB CHASSIS WHEEL BASE 5 03 = CAB CHASSIS WHEEL BASE 3	EG2 = 3.5L V6 Gas Engine EXM = 3.0L V6 Turbo Diesel Engine	DGZ = 5-Speed Auto W5A380 Transmission

Hoses, Power Steering
Figure 19-610

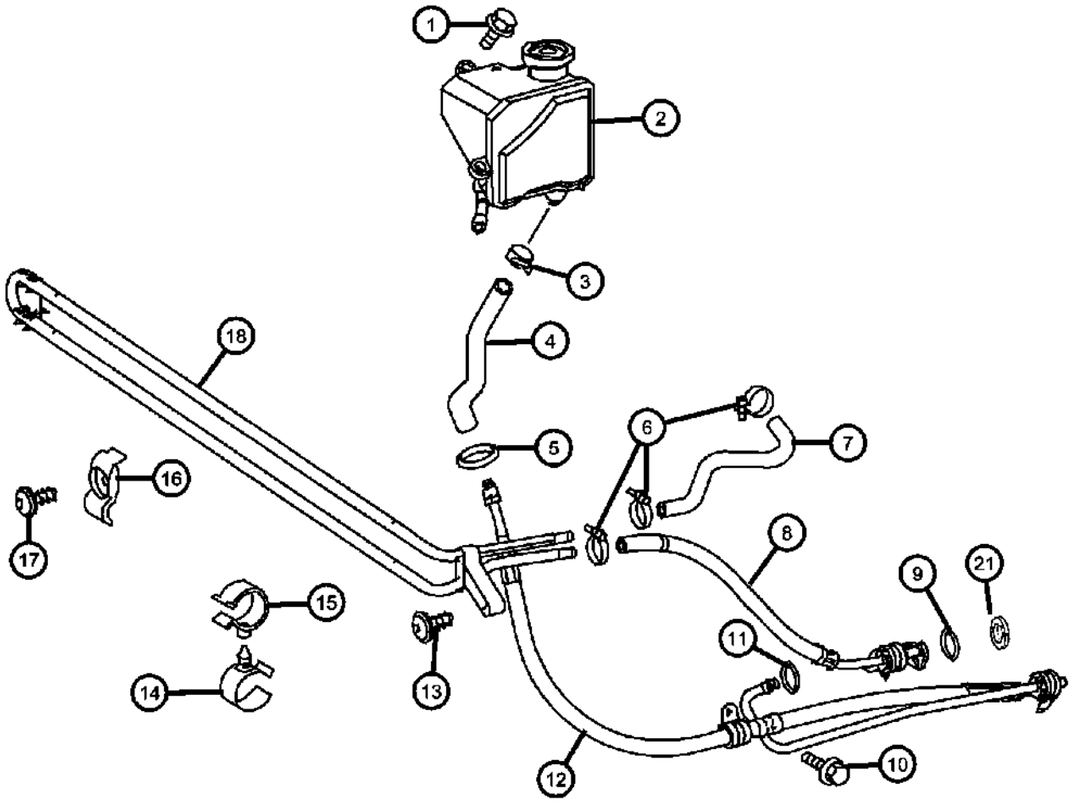

ITEM	PART NUMBER	QTY	LINE	SERIES	BODY	ENGINE	TRANS	TRIM	DESCRIPTION
1	06104683AA	3	2, 3, 6, 7	L		EXM	DGZ		BOLT, 6 Lobe External Head, M6x1.0x23.0
2	68012238AA	1	2, 3, 6, 7	L		EXM	DGZ		RESERVOIR, Power Steering Pump
3									CLAMP
	06104808AA	2	3, 7	L		EXM	DGZ		26MM
		2	2, 3, 6, 7	L		EXM	DGZ		26MM
4	68012239AA	1	2, 3, 6, 7	L		EXM	DGZ		HOSE, Power Steering
5	05183128AA	1	2, 3, 6, 7	L		EG2, EXM	DGZ		O RING
6	05132830AA	1	2, 3, 6, 7	L		EG2, EXM	DGZ		CLAMP
7	68006677AA	1	2, 3, 6, 7	L		EXM	DGZ		HOSE, Power Steering
8									LINE, Power Steering Return
	68006671AA	1	3, 7	L		EG2, EXM	DGZ		
		1	2, 3, 6, 7	L		EG2, EXM	DGZ		
9	68006673AA	1	2, 3, 6, 7	L		EG2, EXM	DGZ		O RING, 7.66x1.78MM
10									SCREW
	06104022AA	1	3, 7	L		EXM	DGZ		M8x16
		1	2, 3, 6, 7	L		EXM	DGZ		M8x16
11	68006673AA	1	2, 3, 6, 7	L		EG2, EXM	DGZ		O RING
12	68006667AA	1	2, 3, 6, 7	L		EXM	DGZ		HOSE, Power Steering Pressure
13	68006685AA	4	2, 3, 6, 7	L		EG2, EXM	DGZ		SCREW
14									CLAMP, Brake Hose
	05125887AB	1	3, 7	L		EG2, EXM	DGZ		
		1	2, 3, 6, 7	L		EG2, EXM	DGZ		
15									CLIP, Brake Line
	05117625AA	1	3, 7	L		EG2, EXM	DGZ		
		1	2, 3, 6, 7	L		EG2, EXM	DGZ		
16	68006686AA	1	2, 3, 6, 7	L		EG2, EXM	DGZ		CLAMP
17	68006685AA	4	2, 3, 6, 7	L		EG2, EXM	DGZ		SCREW
18									LINE, Oil Cooler
	68006681AA	1	2, 3, 6, 7	L		EXM	DGZ		With [HAB]
	68006682AA	1	2, 3, 6, 7	L		EXM	DGZ		Without [HAB]
-19									NUT

SPRINTER (VB)

SERIES	LINE	BODY	ENGINE	TRANSMISSION
L = LOWLINE	3 = HD DODGE 2WD 6 = Lt. Duty DODGE 4WD 2 = Med. Duty DODGE 2WD 7 = Med. Duty DODGE 4WD	17 = VAN WHEEL BASE 7 55 = WAGON WHEEL BASE 5 15 = VAN WHEEL BASE 5 53 = 119 WB 13 = 119 WB 05 = CAB CHASSIS WHEEL BASE 5 03 = CAB CHASSIS WHEEL BASE 3	EG2 = 3.5L V6 Gas Engine EXM = 3.0L V6 Turbo Diesel Engine	DGZ = 5-Speed Auto W5A380 Transmission

Hoses, Power Steering
Figure 19-610

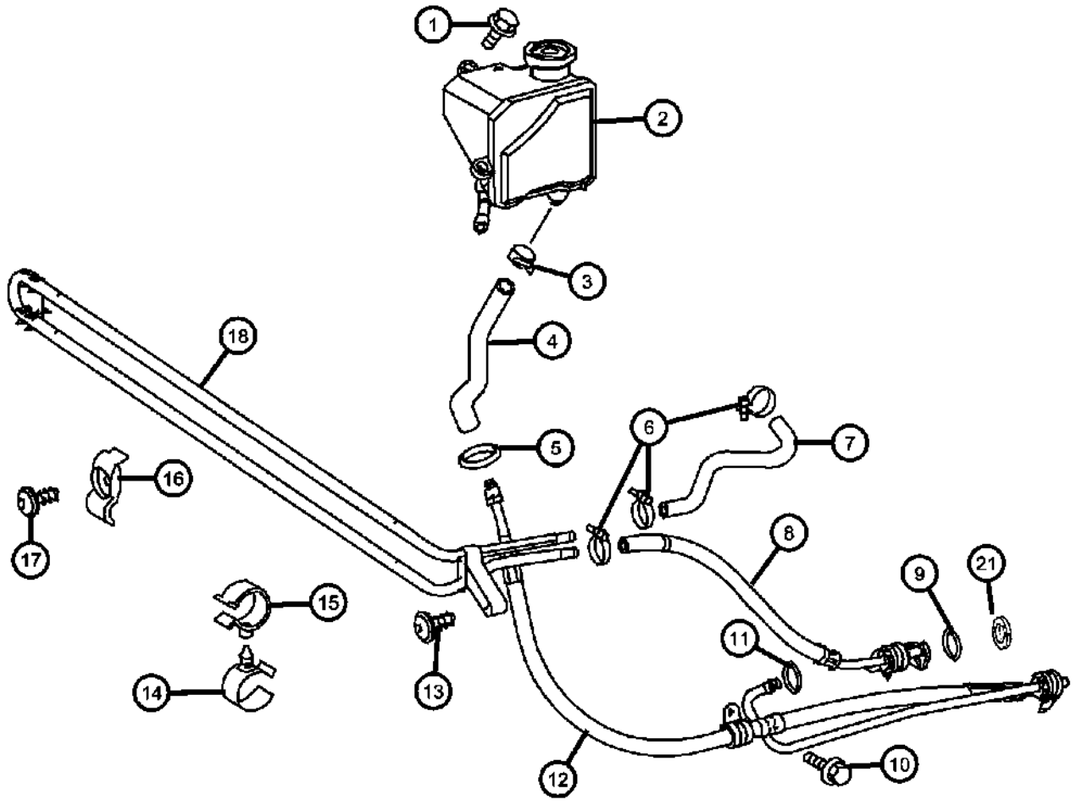

ITEM	PART NUMBER	QTY	LINE	SERIES	BODY	ENGINE	TRANS	TRIM	DESCRIPTION
	68004878AA	2	3, 7	L		EG2, EXM	DGZ		
		2	2, 3, 6, 7	L		EG2, EXM	DGZ		
-20	05133476AB	2	2, 3, 6, 7	L		EG2, EXM	DGZ		SCREW, Hex Flange Head, M6x1.00x20.00
21	68006672AA	1	2, 3, 6, 7	L		EG2, EXM	DGZ		O RING, Back Up O Ring

SPRINTER (VB)

SERIES	LINE	BODY	ENGINE	TRANSMISSION
L = LOWLINE	3 = HD DODGE 2WD 6 = Lt. Duty DODGE 4WD 2 = Med. Duty DODGE 2WD 7 = Med. Duty DODGE 4WD	17 = VAN WHEEL BASE 7 55 = WAGON WHEEL BASE 5 15 = VAN WHEEL BASE 5 53 = 119 WB 13 = 119 WB 05 = CAB CHASSIS WHEEL BASE 5 03 = CAB CHASSIS WHEEL BASE 3	EG2 = 3.5L V6 Gas Engine EXM = 3.0L V6 Turbo Diesel Engine	DGZ = 5-Speed Auto W5A380 Transmission

Group - 021DGZ

NAG1; W5A380; 5-Speed; Automatic Transmission

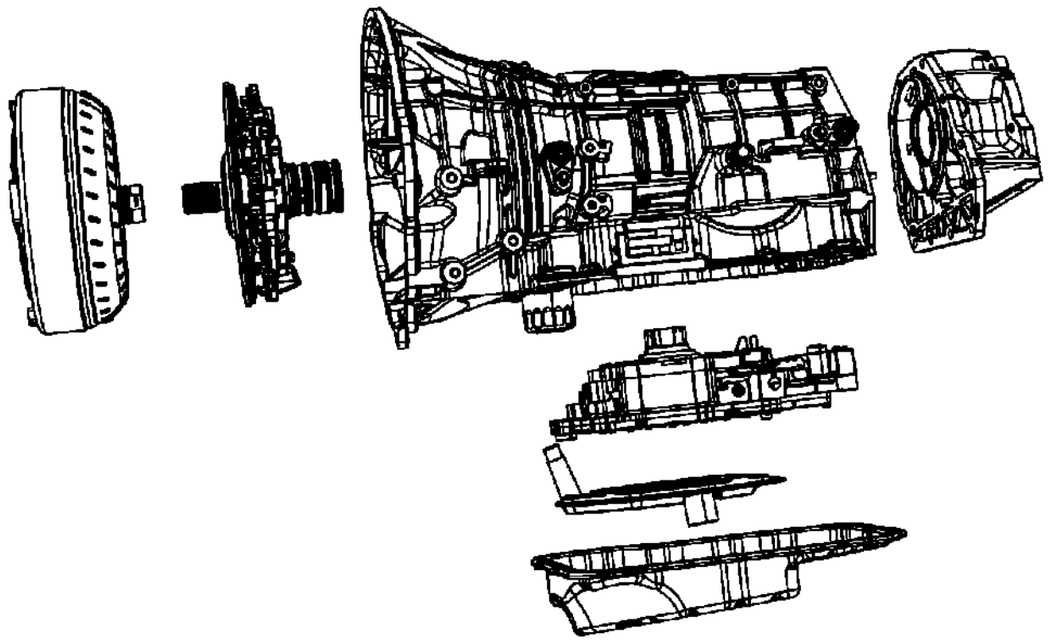

021DGZ-100 Automatic Transmission / Transaxle and Torque Converter 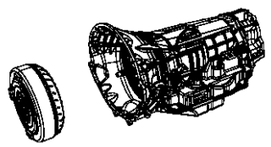	**021DGZ-1100** Gearshift Controls and Related Parts	**021DGZ-1200** Mounting and Skid Plate	**021DGZ-200** Case, Extension, Oil Pan, and Indicator (Dipstick) 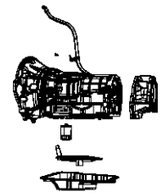
021DGZ-300 Seal and Shim Packages	**021DGZ-400** Oil Pump 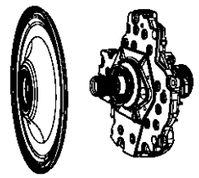	**021DGZ-500** Clutches 	**021DGZ-600** Gear Train 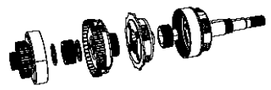
021DGZ-800 Valve Body, Accumulator, Solenoid and Parking Sprag 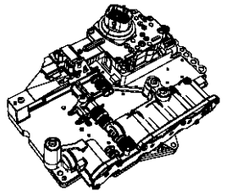			

Group - 021DGZ NAG1; W5A380; 5-Speed; Automatic Transmission

Illustration Title — Group-Fig. No.

Automatic Transmission / Transaxle and Torque Converter
Transmission / Transaxle Assembly ..... Fig. 021DGZ - 105
Torque Converter ..... Fig. 021DGZ - 110

Case, Extension, Oil Pan, and Indicator (Dipstick)
Case ..... Fig. 021DGZ - 205
Case Assembly ..... Fig. 021DGZ - 210
Oil Fill Tube And Related Parts ..... Fig. 021DGZ - 225
Oil Pan, Cover And Related Parts ..... Fig. 021DGZ - 230
Filters ..... Fig. 021DGZ - 235

Seal and Shim Packages
Transmission Seal and Gasket Package ..... Fig. 021DGZ - 301

Oil Pump
Oil Pump and Related Parts ..... Fig. 021DGZ - 420

Clutches
B1 Brake Clutch ..... Fig. 021DGZ - 526
K1 Clutch Assembly ..... Fig. 021DGZ - 527
K2 Clutch Assembly ..... Fig. 021DGZ - 528
K3 Clutch Assembly [DGZ] ..... Fig. 021DGZ - 529
B2 / B3 Clutch Illustration 1 Of 3 ..... Fig. 021DGZ - 530
Multiple Disk Brake / [B2/B3] 2 Of 3 ..... Fig. 021DGZ - 531
B2 / B3 Clutch Illustration 3 Of 3 ..... Fig. 021DGZ - 532

Gear Train
Front Planetary Carrier ..... Fig. 021DGZ - 611
Output Shaft With Center And Rear Planetary Gear Sets ..... Fig. 021DGZ - 612

Valve Body, Accumulator, Solenoid and Parking Sprag
Valve Body And Related Parts ..... Fig. 021DGZ - 825
Connector Repair ..... Fig. 021DGZ - 826

Gearshift Controls and Related Parts
Gearshift Controls ..... Fig. 021DGZ - 1105

Mounting and Skid Plate
Mounting Covers And Shields ..... Fig. 021DGZ - 1205

Transmission / Transaxle Assembly
Figure 021DGZ-105

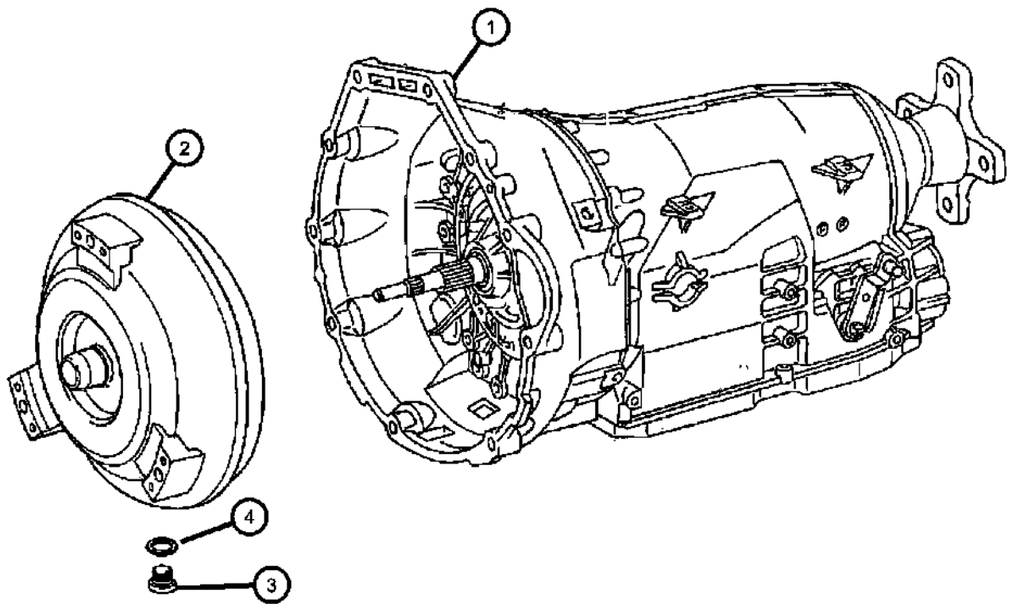

ITEM	PART NUMBER	QTY	LINE	SERIES	BODY	ENGINE	TRANS	TRIM	DESCRIPTION
NOTE:									
Sales Code:									
[DGZ]=5 Speed Automatic Transmission - [W5A380]									
[EGZ]=3.5L V-6 Gas Engine [Mercedes Benz]									
[EXM]=3.0L Turbo Diesel Engine [Mercedes Benz]									
1									TRANSMISSION, Automatic
	05166032AA	1	2, 3, 6, 7	L		EG2	DGZ		
	05166351AA	1	2, 3, 6, 7	L		EXM	DGZ		
2									CONVERTER, Torque
	05161459AA	1	2, 3, 6, 7	L		EG2	DGZ		
	05175947AA	1	2, 3, 6, 7	L		EXM	DGZ		
3	05080398AB	1	2, 3, 6, 7	L		EG2, EXM	DGZ		PLUG, [M10x1x11MM]
4	05080014AA	1	2, 3, 6, 7	L		EG2, EXM	DGZ		O RING
-5	05080067AA	1	2, 3, 6, 7	L		EG2, EXM	DGZ		GASKET PACKAGE, Transmission

SPRINTER (VB)

SERIES	LINE	BODY	ENGINE	TRANSMISSION
L = LOWLINE	3 = HD DODGE 2WD 6 = Lt. Duty DODGE 4WD 2 = Med. Duty DODGE 2WD 7 = Med. Duty DODGE 4WD	17 = VAN WHEEL BASE 7 55 = WAGON WHEEL BASE 5 15 = VAN WHEEL BASE 5 53 = 119 WB 13 = 119 WB 05 = CAB CHASSIS WHEEL BASE 5 03 = CAB CHASSIS WHEEL BASE 3	EG2 = 3.5L V6 Gas Engine EXM = 3.0L V6 Turbo Diesel Engine	DGZ = 5-Speed Auto W5A380 Transmission

Torque Converter
Figure 021DGZ-110

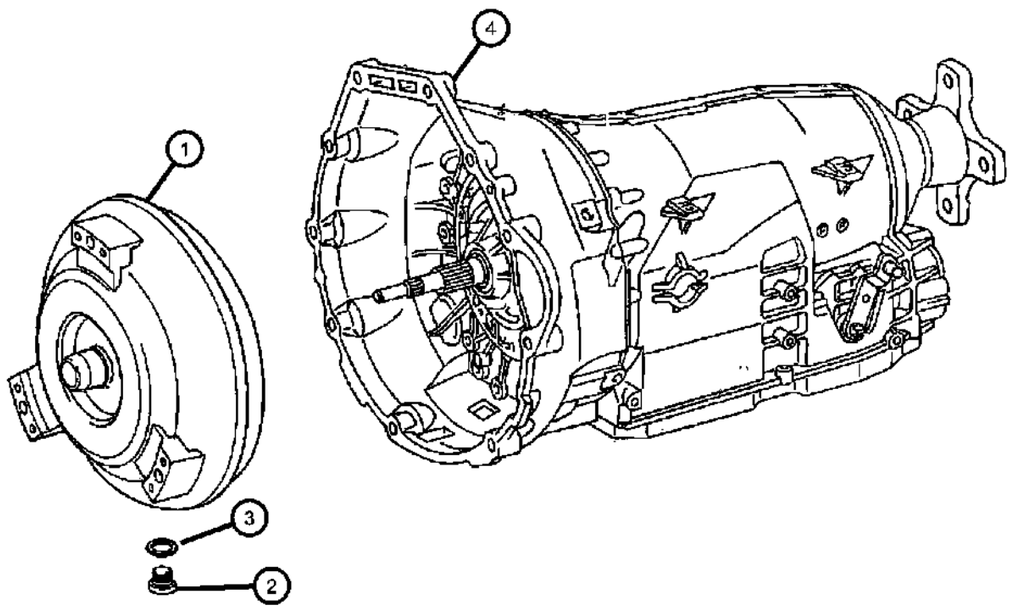

ITEM	PART NUMBER	QTY	LINE	SERIES	BODY	ENGINE	TRANS	TRIM	DESCRIPTION
NOTE:									
Sales Code:									
[DGZ]=5 Speed Automatic Transmission - [W5A380]									
[EGZ]=3.5L V-6 Gas Engine [Mercedes Benz]									
[EXM]=3.0L Turbo Diesel Engine [Mercedes Benz]									
1									CONVERTER, Torque
	05161459AA	1	2, 3, 6, 7	L		EG2	DGZ		
	05175947AA	1	2, 3, 6, 7	L		EXM	DGZ		
2	05080398AB	1	2, 3, 6, 7	L		EG2, EXM	DGZ		PLUG, [M10x1x11MM]
3	05080014AA	1	2, 3, 6, 7	L		EG2, EXM	DGZ		O RING
4									TRANSMISSION, Automatic
	05166032AA	1	2, 3, 6, 7	L		EG2	DGZ		
	05166351AA	1	2, 3, 6, 7	L		EXM	DGZ		
-5	05080067AA	1	2, 3, 6, 7	L		EG2, EXM	DGZ		GASKET PACKAGE, Transmission

SPRINTER (VB)

SERIES	LINE	BODY	ENGINE	TRANSMISSION
L = LOWLINE	3 = HD DODGE 2WD 6 = Lt. Duty DODGE 4WD 2 = Med. Duty DODGE 2WD 7 = Med. Duty DODGE 4WD	17 = VAN WHEEL BASE 7 55 = WAGON WHEEL BASE 5 15 = VAN WHEEL BASE 5 53 = 119 WB 13 = 119 WB 05 = CAB CHASSIS WHEEL BASE 5 03 = CAB CHASSIS WHEEL BASE 3	EG2 = 3.5L V6 Gas Engine EXM = 3.0L V6 Turbo Diesel Engine	DGZ = 5-Speed Auto W5A380 Transmission

Case
Figure 021DGZ-205

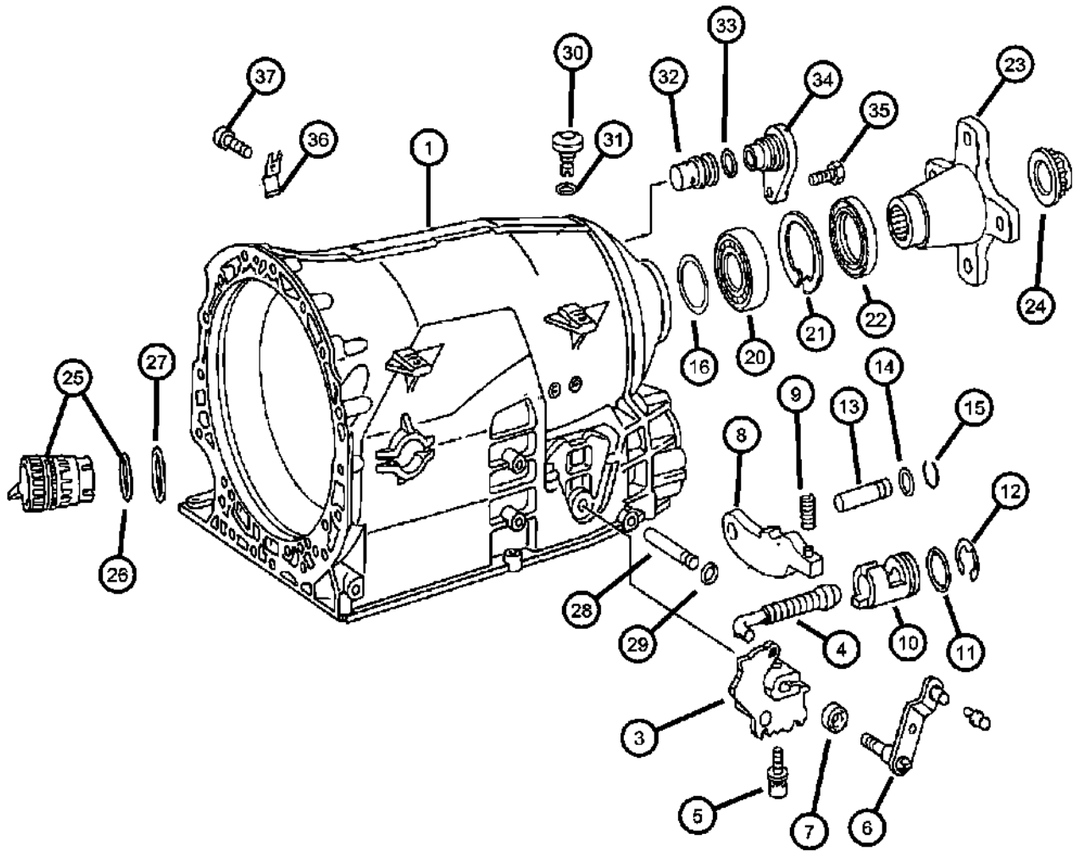

ITEM	PART NUMBER	QTY	LINE	SERIES	BODY	ENGINE	TRANS	TRIM	DESCRIPTION

NOTE:
Sales Code:
[DGZ]=5 Speed Automatic Transmission - [W5A380]
[EGZ]=3.5L V-6 Gas Engine [Mercedes Benz]
[EXM]=3.0L Turbo Diesel Engine [Mercedes Benz]

1	05117849AA	1	2, 3, 6, 7	L		EG2, EXM	DGZ		HOUSING, Transmission
-2	68004976AA	2	2, 3, 6, 7	L		EG2, EXM	DGZ		FITTING
3	05099886AA	1	2, 3, 6, 7	L		EG2, EXM	DGZ		DETENT, Gearshift
4	52108166AA	1	2, 3, 6, 7	L		EXM, EG2	DGZ		LINKAGE, Transmission
5	52108178AA	1	2, 3, 6, 7	L		EG2, EXM	DGZ		BOLT, Torx Head, M6x20
6	05138569AA	1	2, 3, 6, 7	L		EG2, EXM	DGZ		LEVER, Gearshift
7	52108170AA	1	2, 3, 6, 7	L		EG2, EXM	DGZ		SEAL, Transmission
8	52108154AA	1	2, 3, 6, 7	L		EG2, EXM	DGZ		PAWL, Parking Sprag
9	52108157AA	1	2, 3, 6, 7	L		EG2, EXM	DGZ		SPRING
10	52108176AA	1	2, 3, 6, 7	L		EG2, EXM	DGZ		GUIDE
11	52108177AA	1	2, 3, 6, 7	L		EG2, EXM	DGZ		O RING
12	52107976AA	1	2, 3, 6, 7	L		EG2, EXM	DGZ		SNAP RING
13	52108155AA	1	2, 3, 6, 7	L		EG2, EXM	DGZ		SHAFT, Parking Pawl
14	52108156AA	1	2, 3, 6, 7	L		EG2, EXM	DGZ		SEAL, Transmission
15	52107975AA	1	2, 3, 6, 7	L		EG2, EXM	DGZ		SNAP RING
16	52108230AA	AR	3, 6, 7, 2	L		EG2, EXM	DGZ		SHIM, Park & output bearing, 0.20mm
-17	52108220AA	AR	2, 3, 6, 7	L		EG2, EXM	DGZ		SHIM, Park & output bearing, 0.30mm
-18	52108231AA	AR	2, 3, 6, 7	L		EG2, EXM	DGZ		SHIM, Park & output bearing, 0.40mm
-19	52108232AA	AR	2, 3, 6, 7	L		EG2, EXM	DGZ		SHIM, Park & output bearing, 0.50mm
20	52108207AA	1	2, 3, 6, 7	L		EG2, EXM	DGZ		BEARING, Output Shaft
21	52108208AA	1	2, 3, 6, 7	L		EG2, EXM	DGZ		SNAP RING
22	52108428AA	1	2, 3, 6, 7	L		EG2, EXM	DGZ		SEAL, Output Shaft
23	05161908AA	1	2, 3, 6, 7	L		EG2, EXM	DGZ		FLANGE, Drive Shaft
24	52108234AA	1	2, 3, 6, 7	L		EG2, EXM	DGZ		NUT, Flange to Output Shaft, M26x1.5
25	68021352AA	1	2, 3, 6, 7	L		EG2, EXM	DGZ		PLUG, Adapter
26	68021352AA	1							O RING, Adapter Plug, (NOT SERVICED)

SPRINTER (VB)

SERIES	LINE	BODY	ENGINE	TRANSMISSION
L = LOWLINE	3 = HD DODGE 2WD 6 = Lt. Duty DODGE 4WD 2 = Med. Duty DODGE 2WD 7 = Med. Duty DODGE 4WD	17 = VAN WHEEL BASE 7 55 = WAGON WHEEL BASE 5 15 = VAN WHEEL BASE 5 53 = 119 WB 13 = 119 WB 05 = CAB CHASSIS WHEEL BASE 5 03 = CAB CHASSIS WHEEL BASE 3	EG2 = 3.5L V6 Gas Engine EXM = 3.0L V6 Turbo Diesel Engine	DGZ = 5-Speed Auto W5A380 Transmission

Case
Figure 021DGZ-205

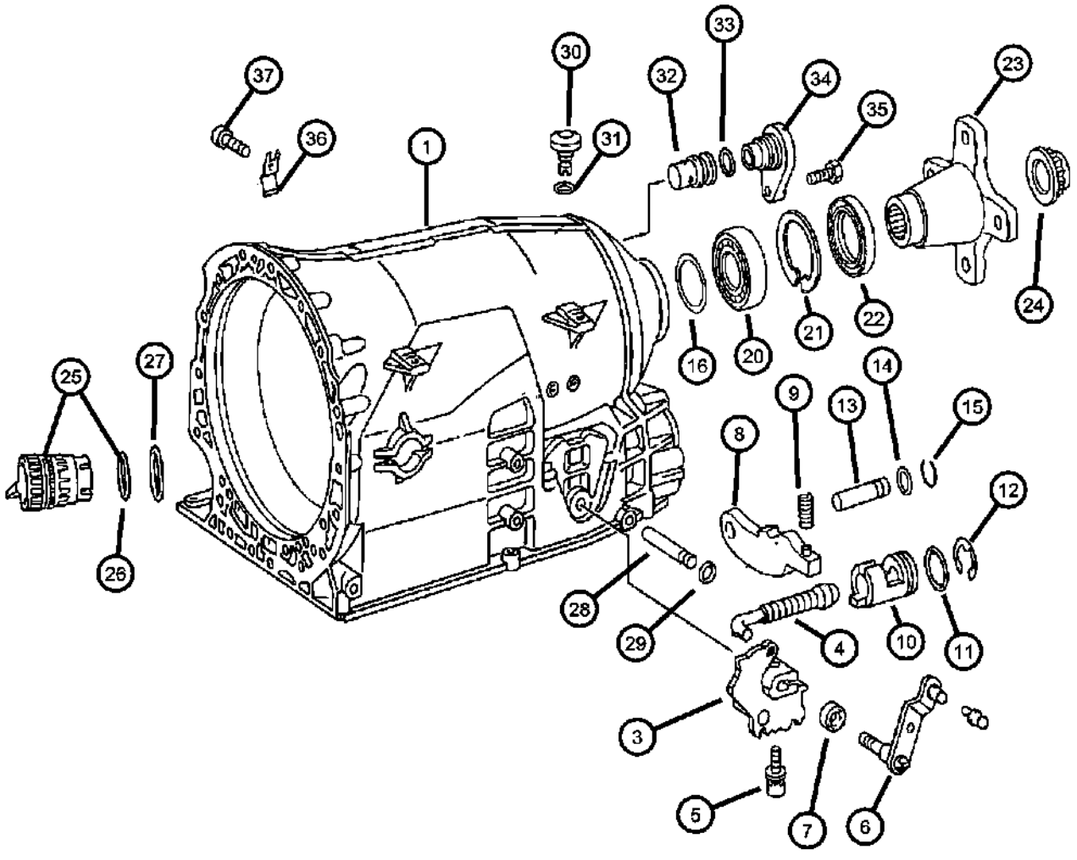

ITEM	PART NUMBER	QTY	LINE	SERIES	BODY	ENGINE	TRANS	TRIM	DESCRIPTION
27	68001279AA	1	2, 3, 6, 7	L		EG2, EXM	DGZ		O RING, Adapter Plug, [31.0x2.8]
28	52108159AA	1	2, 3, 6, 7	L		EG2, EXM	DGZ		PIN
29	52108160AA	1	2, 3, 6, 7	L		EG2, EXM	DGZ		SEAL, Transmission
30	52108364AA	1	2, 3, 6, 7	L		EG2, EXM	DGZ		BREATHER, Transmission
31	52108367AA	1	2, 6, 7, 3	L		EG2, EXM	DGZ		O RING
32	05117853AA	1	2, 3, 6, 7	L		EG2, EXM	DGZ		RETAINER
33	05125908AA	1	2, 3, 6, 7	L		EG2, EXM	DGZ		O RING, Sensor
34	05117839AA	1	2, 3, 6, 7	L		EG2, EXM	DGZ		CAP, Oil Filler
35	04862644AA	1	2, 3, 6, 7	L		EG2, EXM	DGZ		SCREW, [M6x18]
36	52108179AA	1	2, 3, 6, 7	L		EG2, EXM	DGZ		SPRING
37	52108161AA	1	2, 3, 6, 7	L		EG2, EXM	DGZ		SCREW

SPRINTER (VB)

SERIES	LINE	BODY	ENGINE	TRANSMISSION
L = LOWLINE	3 = HD DODGE 2WD 6 = Lt. Duty DODGE 4WD 2 = Med. Duty DODGE 2WD 7 = Med. Duty DODGE 4WD	17 = VAN WHEEL BASE 7 55 = WAGON WHEEL BASE 5 15 = VAN WHEEL BASE 5 53 = 119 WB 13 = 119 WB 05 = CAB CHASSIS WHEEL BASE 5 03 = CAB CHASSIS WHEEL BASE 3	EG2 = 3.5L V6 Gas Engine EXM = 3.0L V6 Turbo Diesel Engine	DGZ = 5-Speed Auto W5A380 Transmission

Case Assembly
Figure 021DGZ-210

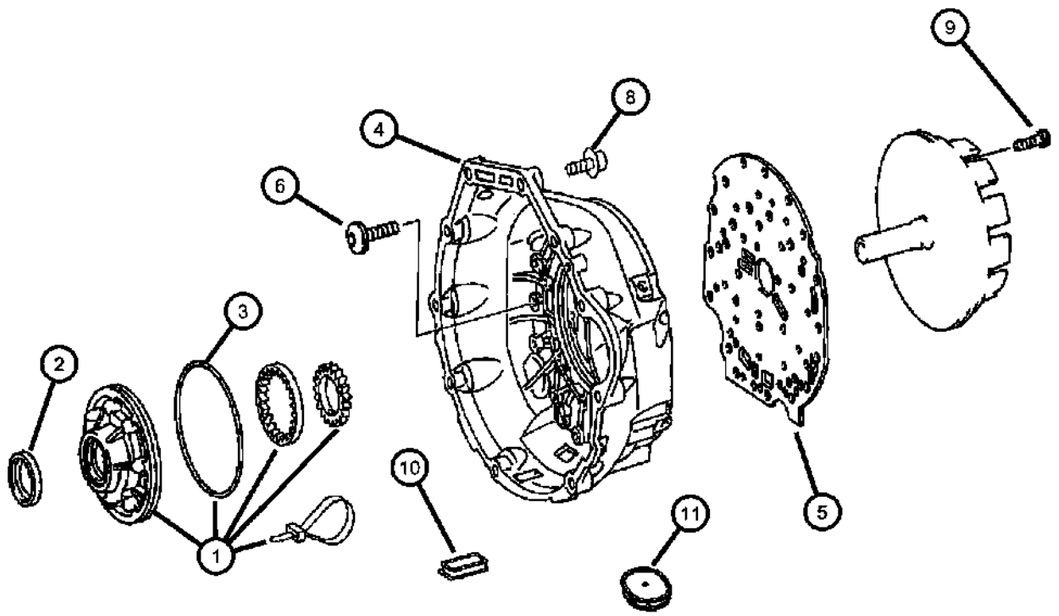

ITEM	PART NUMBER	QTY	LINE	SERIES	BODY	ENGINE	TRANS	TRIM	DESCRIPTION
NOTE:									
Sales Code:									
[DGZ]=5 Speed Automatic Transmission - [W5A380]									
[EGZ]=3.5L V-6 Gas Engine [Mercedes Benz]									
[EXM]=3.0L Turbo Diesel Engine [Mercedes Benz]									
1	05080070AA	1	2, 3, 6, 7	L		EG2, EXM	DGZ		PUMP, Transmission Oil
2	52108424AA	1	2, 3, 6, 7	L		EG2, EXM	DGZ		SEAL
3	52107900AA	1	2, 3, 6, 7	L		EG2, EXM	DGZ		O RING, Transmission Oil Pump
4	05161462AA	1	2, 3, 6, 7	L		EG2, EXM	DGZ		HOUSING, Torque Converter
5	52108147AA	1	2, 3, 6, 7	L		EG2, EXM	DGZ		PLATE, Intermediate
6	06104158AA	2	2, 3, 6, 7	L		EG2, EXM	DGZ		BOLT, Torx Head, M8x1.25x40
-7	52108206AA	15	2, 3, 6, 7	L		EG2, EXM	DGZ		BOLT, Socket Head, M8x40, Bell Housing To Transmission Case
8	52107934AA	11	2, 3, 6, 7	L		EG2, EXM	DGZ		BOLT, Torx Head, M6x32
9	52107933AA	7	2, 3, 6, 7	L		EG2, EXM	DGZ		BOLT, Torx Head, M8x35
10	05073886AA	2	2, 3, 6, 7	L		EG2, EXM	DGZ		GASKET, Converter Housing Cover
11	53013767AA	1	2, 3, 6, 7	L		EG2, EXM	DGZ		PLUG



SPRINTER (VB)

SERIES	LINE	BODY	ENGINE	TRANSMISSION
L = LOWLINE	3 = HD DODGE 2WD 6 = Lt. Duty DODGE 4WD 2 = Med. Duty DODGE 2WD 7 = Med. Duty DODGE 4WD	17 = VAN WHEEL BASE 7 55 = WAGON WHEEL BASE 5 15 = VAN WHEEL BASE 5 53 = 119 WB 13 = 119 WB 05 = CAB CHASSIS WHEEL BASE 5 03 = CAB CHASSIS WHEEL BASE 3	EG2 = 3.5L V6 Gas Engine EXM = 3.0L V6 Turbo Diesel Engine	DGZ = 5-Speed Auto W5A380 Transmission

Oil Fill Tube And Related Parts
Figure 021DGZ-225

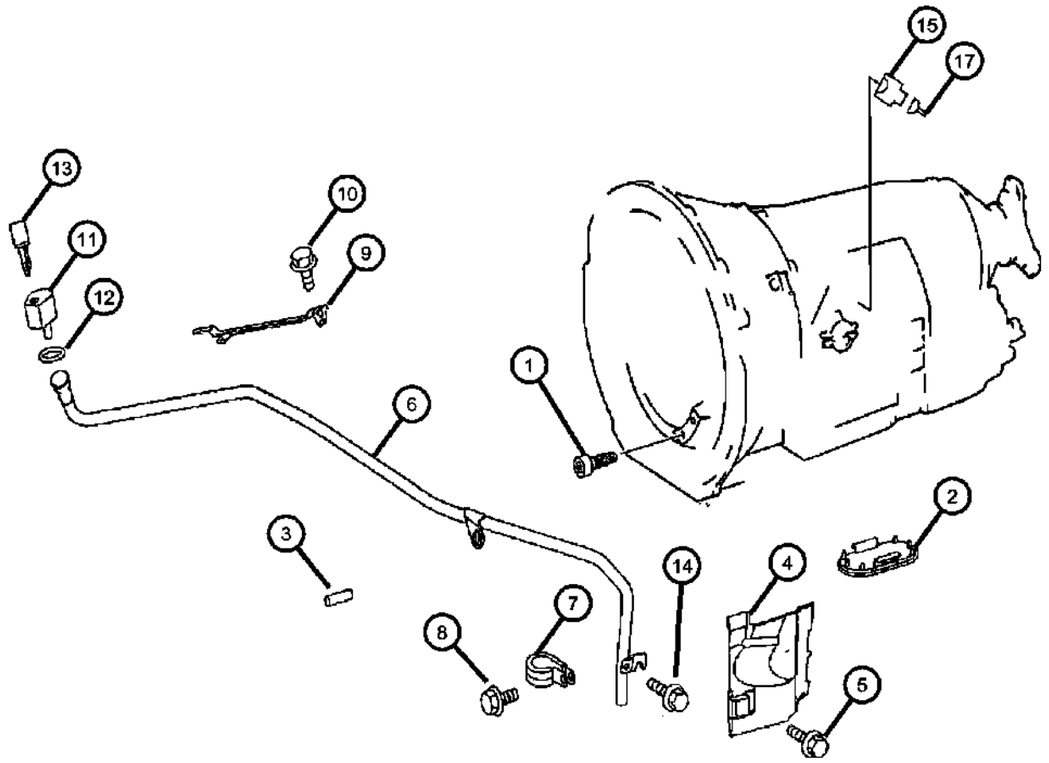

ITEM	PART NUMBER	QTY	LINE	SERIES	BODY	ENGINE	TRANS	TRIM	DESCRIPTION
NOTE:									
Sales Code:									
[DGZ]=5 Speed Automatic Transmission - [W5A380]									
[EGZ]=3.5L V-6 Gas Engine [Mercedes Benz]									
[EXM]=3.0L Turbo Diesel Engine [Mercedes Benz]									
1									SCREW
	05137660AA	2	2, 3, 6, 7	L		EG2	DGZ		Intermediate Flange To Transmission Case [M8x80]
	05191821AA	6	2, 3, 6, 7	L		EG2, EXM	DGZ		Flywheel To Torque Converter [M10x31]
	06104024AA	8	3, 7	L		EG2, EXM	DGZ		Intermediate Flange To Transmission Case [M8x25]
		8	2, 3, 6, 7	L		EG2, EXM	DGZ		Intermediate Flange To Transmission Case [M8x25]
2	68013686AA	1	2, 3, 6, 7	L		EG2, EXM	DGZ		COVER, Converter Cover At Bell Housing
3	05080447AA	1	2, 3, 6, 7	L		EG2, EXM	DGZ		PIN, Transmission To Engine Block
4	53013508AA	1	2, 3, 6, 7	L		EG2	DGZ		SHIELD, Heat
5									SCREW
	06104681AA	1	3, 7	L		EG2, EXM	DGZ		
		1	2, 6	L		EG2, EXM	DGZ		
6									TUBE
	68013688AA	1	2, 3, 6, 7	L		EXM	DGZ		
	68013687AA	1	2, 3, 6, 7	L		EG2	DGZ		
7									CLAMP, Tube Retaining
	05073938AB	2	3, 7	L		EG2	DGZ		
		2	2, 6	L		EG2	DGZ		
8	06104076AA	2	2, 3, 6, 7	L		EG2, EXM	DGZ		BOLT, Torx, M6X1.00X16.00
9	68013689AA	1	2, 3, 6, 7	L		EG2	DGZ		BRACKET
10	06104076AA	2	2, 3, 6, 7	L		EG2, EXM	DGZ		BOLT, Torx, M6X1.00X16.00
11									CAP, Oil Filler
	53013549AA	1	3, 7	L		EG2, EXM	DGZ		
		1	2, 3, 6, 7	L		EG2, EXM	DGZ		
12									SEAL, Oil Filler Tube
	05101154AA	1	3, 7	L		EG2, EXM	DGZ		
		1	2, 3, 6, 7	L		EG2, EXM	DGZ		

SPRINTER (VB)

SERIES	LINE	BODY	ENGINE	TRANSMISSION
L = LOWLINE	3 = HD DODGE 2WD 6 = Lt. Duty DODGE 4WD 2 = Med. Duty DODGE 2WD 7 = Med. Duty DODGE 4WD	17 = VAN WHEEL BASE 7 55 = WAGON WHEEL BASE 5 15 = VAN WHEEL BASE 5 53 = 119 WB 13 = 119 WB 05 = CAB CHASSIS WHEEL BASE 5 03 = CAB CHASSIS WHEEL BASE 3	EG2 = 3.5L V6 Gas Engine EXM = 3.0L V6 Turbo Diesel Engine	DGZ = 5-Speed Auto W5A380 Transmission

Oil Fill Tube And Related Parts
Figure 021DGZ-225

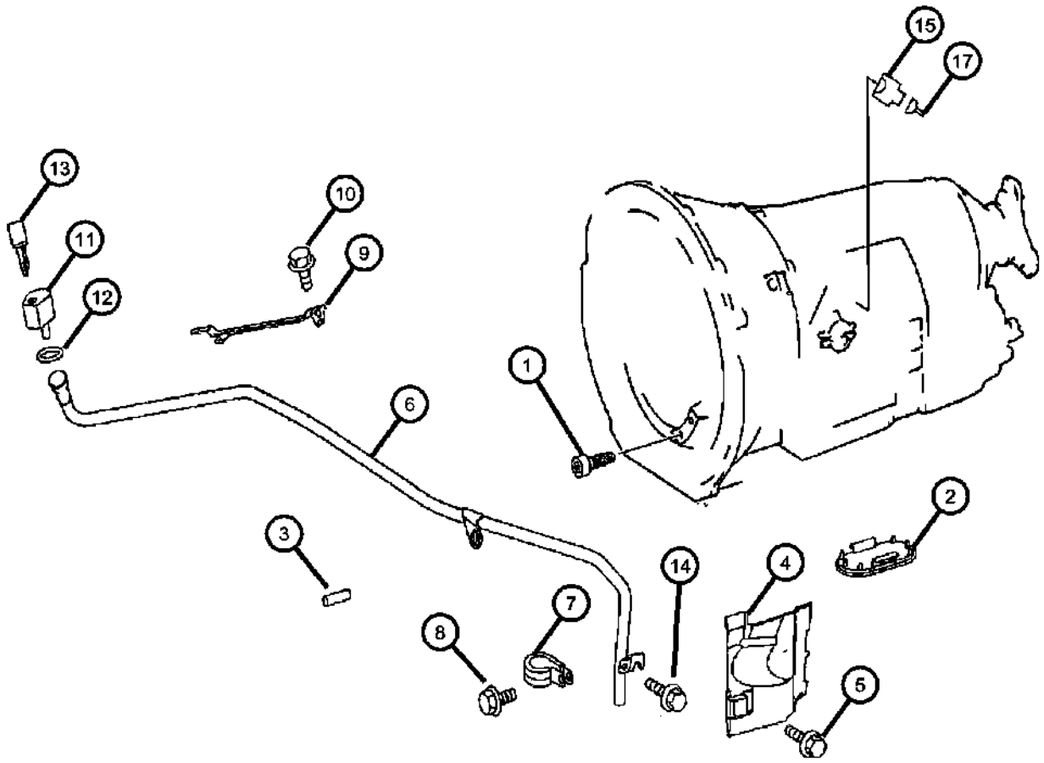

ITEM	PART NUMBER	QTY	LINE	SERIES	BODY	ENGINE	TRANS	TRIM	DESCRIPTION
13									PIN
	05093746AA	1	3, 7	L		EG2, EXM	DGZ		
		1	2, 3, 6, 7	L		EG2, EXM	DGZ		
14									SCREW
	06104681AA	1	3, 7	L		EG2, EXM	DGZ		
		1	2, 3, 6, 7	L		EG2, EXM	DGZ		
15	05120265AA	1	2, 3, 6, 7	L		EG2, EXM	DGZ		CONNECTOR, [A62 / 12PIN]
-16	05120884AA	1	2, 3, 6, 7	L		EG2, EXM	DGZ		CAP, [A62]
17	05103882AA	1	2, 3, 6, 7	L					TERMINAL, [A62] Contact [0.5-1.0MM 2/JPT]

SPRINTER (VB)

SERIES	LINE	BODY	ENGINE	TRANSMISSION
L = LOWLINE	3 = HD DODGE 2WD 6 = Lt. Duty DODGE 4WD 2 = Med. Duty DODGE 2WD 7 = Med. Duty DODGE 4WD	17 = VAN WHEEL BASE 7 55 = WAGON WHEEL BASE 5 15 = VAN WHEEL BASE 5 53 = 119 WB 13 = 119 WB 05 = CAB CHASSIS WHEEL BASE 5 03 = CAB CHASSIS WHEEL BASE 3	EG2 = 3.5L V6 Gas Engine EXM = 3.0L V6 Turbo Diesel Engine	DGZ = 5-Speed Auto W5A380 Transmission

Oil Pan, Cover And Related Parts
Figure 021DGZ-230

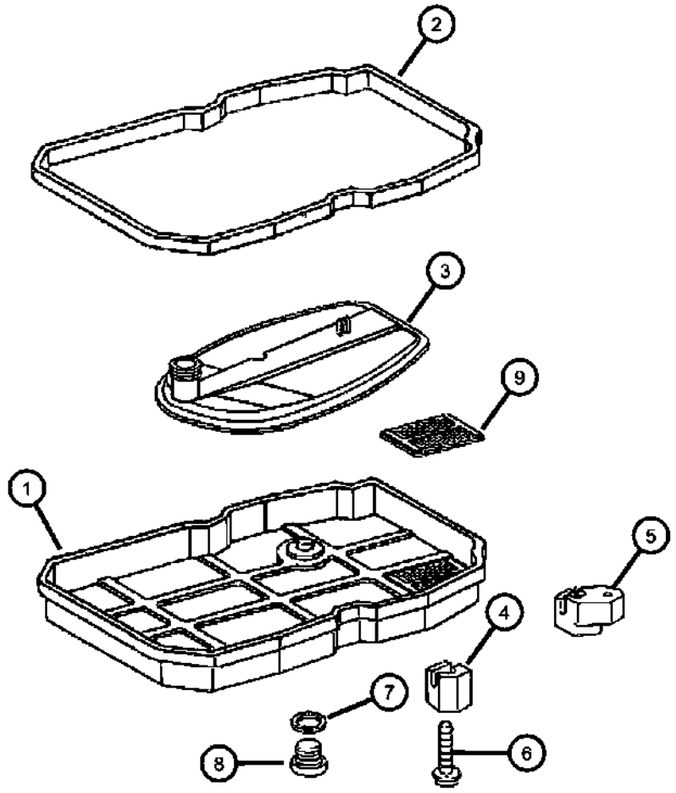

ITEM	PART NUMBER	QTY	LINE	SERIES	BODY	ENGINE	TRANS	TRIM	DESCRIPTION
NOTE:									
Sales Code:									
[DGZ]=5 Speed Automatic Transmission - [W5A380]									
[EGZ]=3.5L V-6 Gas Engine [Mercedes Benz]									
[EXM]=3.0L Turbo Diesel Engine [Mercedes Benz]									
1	52108326AA	1	2, 3, 6, 7	L		EG2, EXM	DGZ		PAN, Transmission Oil
2	52108332AA	1	2, 3, 6, 7	L		EG2, EXM	DGZ		GASKET, Oil Pan
3	52108325AA	1	2, 3, 6, 7	L		EG2, EXM	DGZ		FILTER, Transmission Oil
4	52108334AA	AR	2, 3, 6, 7	L		EG2, EXM	DGZ		CLAMP, Oil Pan
5	05080289AA	1	2, 3, 6, 7	L		EG2	DGZ		CLAMP, Oil Pan
6	52108270AA	6	2, 3, 6, 7	L		EG2, EXM	DGZ		BOLT, Torx Head, M6x32
7	52108330AA	1	2, 3, 6, 7	L		EG2, EXM	DGZ		SEAL, Transmission
8	05080398AB	1	2, 3, 6, 7	L		EG2, EXM	DGZ		PLUG
9	52108331AB	1	2, 3, 6, 7	L		EG2, EXM	DGZ		MAGNET

SPRINTER (VB)

SERIES	LINE	BODY	ENGINE	TRANSMISSION
L = LOWLINE	3 = HD DODGE 2WD 6 = Lt. Duty DODGE 4WD 2 = Med. Duty DODGE 2WD 7 = Med. Duty DODGE 4WD	17 = VAN WHEEL BASE 7 55 = WAGON WHEEL BASE 5 15 = VAN WHEEL BASE 5 53 = 119 WB 13 = 119 WB 05 = CAB CHASSIS WHEEL BASE 5 03 = CAB CHASSIS WHEEL BASE 3	EG2 = 3.5L V6 Gas Engine EXM = 3.0L V6 Turbo Diesel Engine	DGZ = 5-Speed Auto W5A380 Transmission

Filters
Figure 021DGZ-235

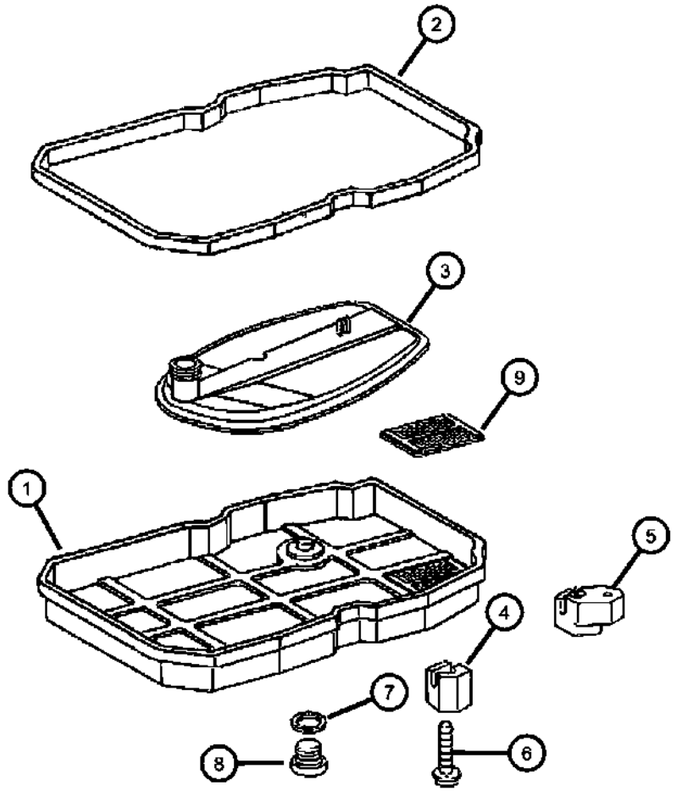

ITEM	PART NUMBER	QTY	LINE	SERIES	BODY	ENGINE	TRANS	TRIM	DESCRIPTION

NOTE:
Sales Code:
[DGZ]=5 Speed Automatic Transmission - [W5A380]
[EGZ]=3.5L V-6 Gas Engine [Mercedes Benz]
[EXM]=3.0L Turbo Diesel Engine [Mercedes Benz]

1	52108326AA	1	2, 3, 6, 7	L		EG2, EXM	DGZ		PAN, Transmission Oil
2	52108332AA	1	2, 3, 6, 7	L		EG2, EXM	DGZ		GASKET, Oil Pan
3	52108325AA	1	2, 3, 6, 7	L		EG2, EXM	DGZ		FILTER, Transmission Oil
4	52108334AA	AR	2, 3, 6, 7	L		EG2, EXM	DGZ		CLAMP, Oil Pan
5	05080289AA	1	2, 3, 6, 7	L		EG2	DGZ		CLAMP, Oil Pan
6	52108270AA	6	2, 3, 6, 7	L		EG2, EXM	DGZ		BOLT, Torx Head, M6x32
7	52108330AA	1	2, 3, 6, 7	L		EG2, EXM	DGZ		SEAL, Transmission
8	05080398AB	1	2, 3, 6, 7	L		EG2, EXM	DGZ		PLUG
9	52108331AB	1	2, 3, 6, 7	L		EXM, EG2	DGZ		MAGNET

SPRINTER (VB)

SERIES	LINE	BODY	ENGINE	TRANSMISSION
L = LOWLINE	3 = HD DODGE 2WD 6 = Lt. Duty DODGE 4WD 2 = Med. Duty DODGE 2WD 7 = Med. Duty DODGE 4WD	17 = VAN WHEEL BASE 7 55 = WAGON WHEEL BASE 5 15 = VAN WHEEL BASE 5 53 = 119 WB 13 = 119 WB 05 = CAB CHASSIS WHEEL BASE 5 03 = CAB CHASSIS WHEEL BASE 3	EG2 = 3.5L V6 Gas Engine EXM = 3.0L V6 Turbo Diesel Engine	DGZ = 5-Speed Auto W5A380 Transmission

Transmission Seal and Gasket Package
Figure 021DGZ-301

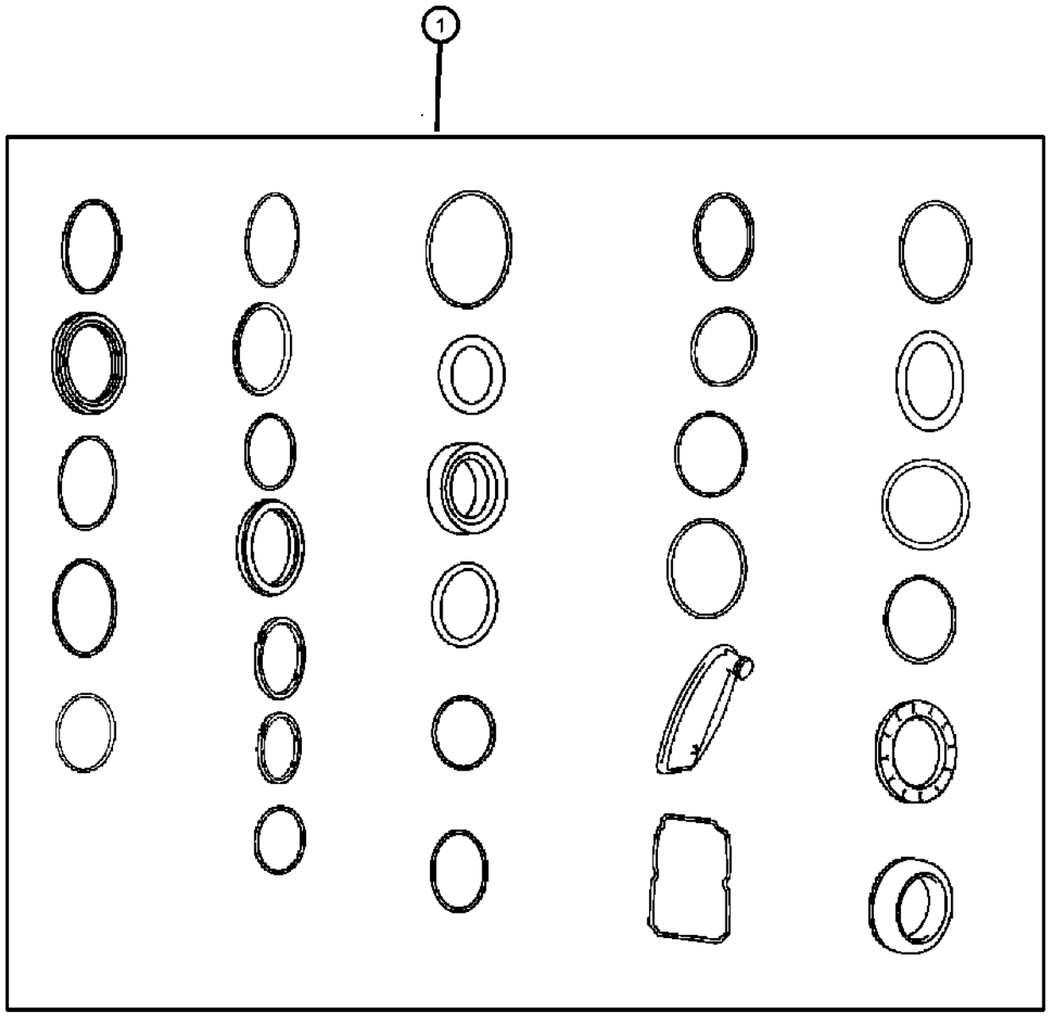

ITEM	PART NUMBER	QTY	LINE	SERIES	BODY	ENGINE	TRANS	TRIM	DESCRIPTION
NOTE:PARTS ILLUSTRATED ARE NOT IN SCALE OR IN CORRECT SIZE. THIS IS A GASKET AND SEAL PACKAGE. IT DOES NOT INCLUDE									
1	05080067AA	1	2, 3, 6, 7	L		EG2, EXM	DGZ		GASKET PACKAGE, Transmission, See Note:

SPRINTER (VB)

SERIES	LINE	BODY	ENGINE	TRANSMISSION
L = LOWLINE	3 = HD DODGE 2WD 6 = Lt. Duty DODGE 4WD 2 = Med. Duty DODGE 2WD 7 = Med. Duty DODGE 4WD	17 = VAN WHEEL BASE 7 55 = WAGON WHEEL BASE 5 15 = VAN WHEEL BASE 5 53 = 119 WB 13 = 119 WB 05 = CAB CHASSIS WHEEL BASE 5 03 = CAB CHASSIS WHEEL BASE 3	EG2 = 3.5L V6 Gas Engine EXM = 3.0L V6 Turbo Diesel Engine	DGZ = 5-Speed Auto W5A380 Transmission

AR = use ase required - = Non illustrrated part

<< RETURN TO GROUP INDEX

Oil Pump and Related Parts
Figure 021DGZ-420

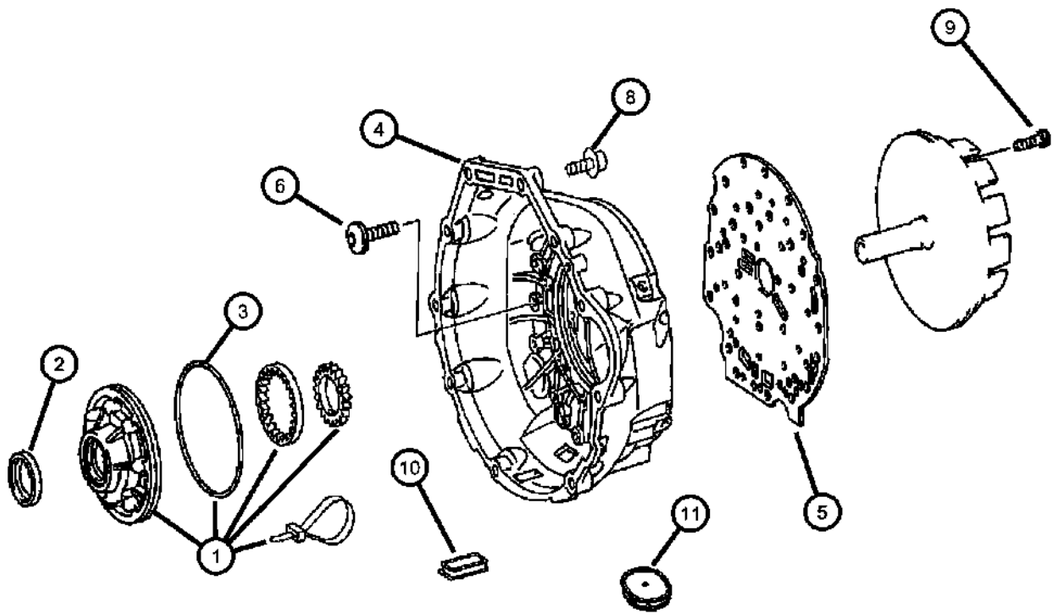

ITEM	PART NUMBER	QTY	LINE	SERIES	BODY	ENGINE	TRANS	TRIM	DESCRIPTION
NOTE: Sales Code: [DGZ]=5 Speed Automatic Transmission - [W5A380] [EGZ]=3.5L V-6 Gas Engine [Mercedes Benz] [EXM]=3.0L Turbo Diesel Engine [Mercedes Benz]									
1	05080070AA	1	2, 3, 6, 7	L		EG2, EXM	DGZ		PUMP, Transmission Oil
2	52108424AA	1	2, 3, 6, 7	L		EG2, EXM	DGZ		SEAL
3	52107900AA	1	2, 3, 6, 7	L		EG2, EXM	DGZ		O RING, Transmission Oil Pump
4	05161462AA	1	2, 3, 6, 7	L		EG2, EXM	DGZ		HOUSING, Torque Converter
5	52108147AA	1	2, 3, 6, 7	L		EG2, EXM	DGZ		PLATE, Intermediate
6	06104158AA	2	2, 3, 6, 7	L		EG2, EXM	DGZ		BOLT, Torx Head, M8x1.25x40
-7	52108206AA	15	2, 3, 6, 7	L		EG2, EXM	DGZ		BOLT, Socket Head, M8x40, Bell Housing To Transmission Case
8	52107934AA	11	2, 3, 6, 7	L		EG2, EXM	DGZ		BOLT, Torx Head, M6x32
9	52107933AA	7	2, 3, 6, 7	L		EG2, EXM	DGZ		BOLT, Torx Head, M8x35
10	05073886AA	2	2, 3, 6, 7	L		EG2, EXM	DGZ		GASKET, Converter Housing Cover
11	53013767AA	1	2, 3, 6, 7	L		EG2, EXM	DGZ		PLUG



SPRINTER (VB)

SERIES	LINE	BODY	ENGINE	TRANSMISSION
L = LOWLINE	3 = HD DODGE 2WD 6 = Lt. Duty DODGE 4WD 2 = Med. Duty DODGE 2WD 7 = Med. Duty DODGE 4WD	17 = VAN WHEEL BASE 7 55 = WAGON WHEEL BASE 5 15 = VAN WHEEL BASE 5 53 = 119 WB 13 = 119 WB 05 = CAB CHASSIS WHEEL BASE 5 03 = CAB CHASSIS WHEEL BASE 3	EG2 = 3.5L V6 Gas Engine EXM = 3.0L V6 Turbo Diesel Engine	DGZ = 5-Speed Auto W5A380 Transmission

B1 Brake Clutch
Figure 021DGZ-526

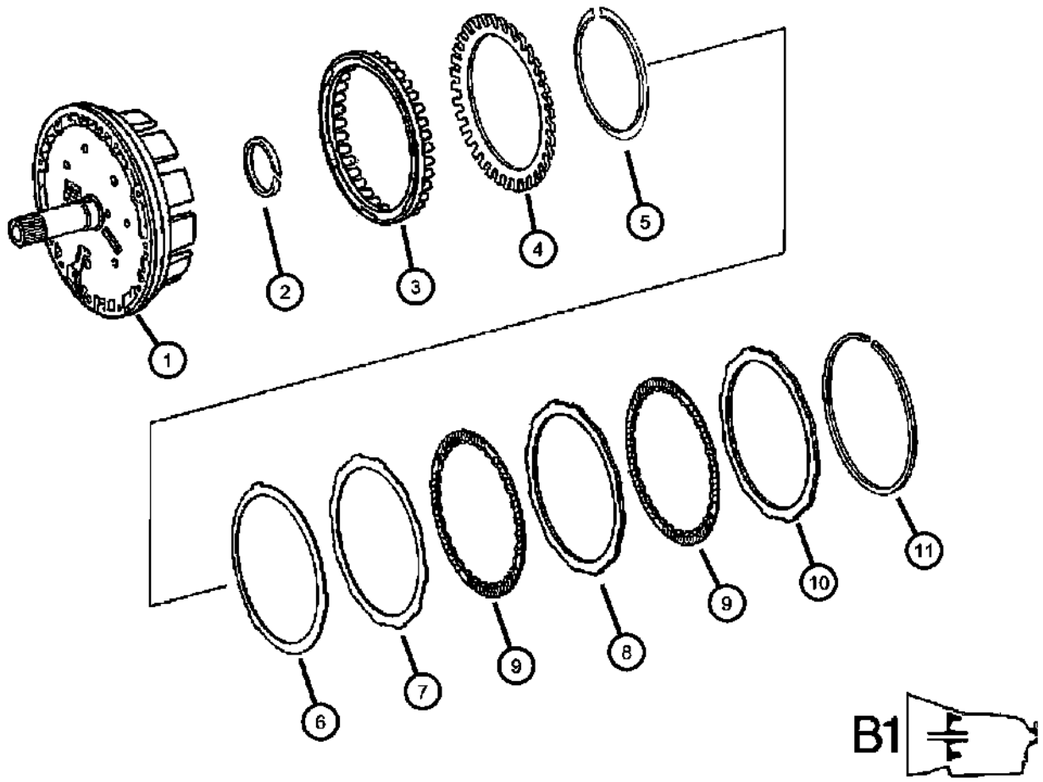

ITEM	PART NUMBER	QTY	LINE	SERIES	BODY	ENGINE	TRANS	TRIM	DESCRIPTION
NOTE:									
Sales Code:									
[DGZ]=5 Speed Automatic Transmission - [W5A380]									
[EGZ]=3.5L V-6 Gas Engine [Mercedes Benz]									
[EXM]=3.0L Turbo Diesel Engine [Mercedes Benz]									
1									HOLDING CLUTCH, Outer carrier, B1
	05138365AA	1	2, 3, 6, 7	L		EG2	DGZ		
	52108539AC	1	2, 3, 6, 7	L		EXM	DGZ		
2	52108028AA	2	2, 3, 6, 7	L		EG2, EXM	DGZ		SEAL, Transmission
3	52108506AA	1	2, 3, 6, 7	L		EG2, EXM	DGZ		PISTON, B1 Clutch
4	52108023AA	1	2, 3, 6, 7	L		EG2, EXM	DGZ		SPRING, Piston Return
5	52107936AA	1	2, 3, 6, 7	L		EG2, EXM	DGZ		SNAP RING
6	52108024AA	1	2, 3, 6, 7	L		EG2, EXM	DGZ		DISC, Spring
7	52107992AA	1	2, 3, 6, 7	L		EG2, EXM	DGZ		DISC, Outer, [1.8MM]
8	52108508AA	4	2, 3, 6, 7	L		EG2, EXM	DGZ		DISC, Outer, [2.07MM]
9	52108507AA	6	2, 3, 6, 7	L		EG2, EXM	DGZ		DISC, Inner
10	52107994AA	1	2, 3, 6, 7	L		EG2, EXM	DGZ		DISC, Outer, [4.0MM]
11									SNAP RING
	52107951AA	AR	2, 3, 6, 7	L		EG2, EXM	DGZ		[3.2MM]
	52107952AA	AR	2, 3, 6, 7	L		EG2, EXM	DGZ		[3.5MM]
	52107949AA	AR	3, 6, 7, 2	L		EG2, EXM	DGZ		[2.6MM]
	52107950AA	AR	2, 3, 6, 7	L		EG2, EXM	DGZ		[2.9MM]

SPRINTER (VB)

SERIES	LINE	BODY	ENGINE	TRANSMISSION
L = LOWLINE	3 = HD DODGE 2WD 6 = Lt. Duty DODGE 4WD 2 = Med. Duty DODGE 2WD 7 = Med. Duty DODGE 4WD	17 = VAN WHEEL BASE 7 55 = WAGON WHEEL BASE 5 15 = VAN WHEEL BASE 5 53 = 119 WB 13 = 119 WB 05 = CAB CHASSIS WHEEL BASE 5 03 = CAB CHASSIS WHEEL BASE 3	EG2 = 3.5L V6 Gas Engine EXM = 3.0L V6 Turbo Diesel Engine	DGZ = 5-Speed Auto W5A380 Transmission

K1 Clutch Assembly
Figure 021DGZ-527

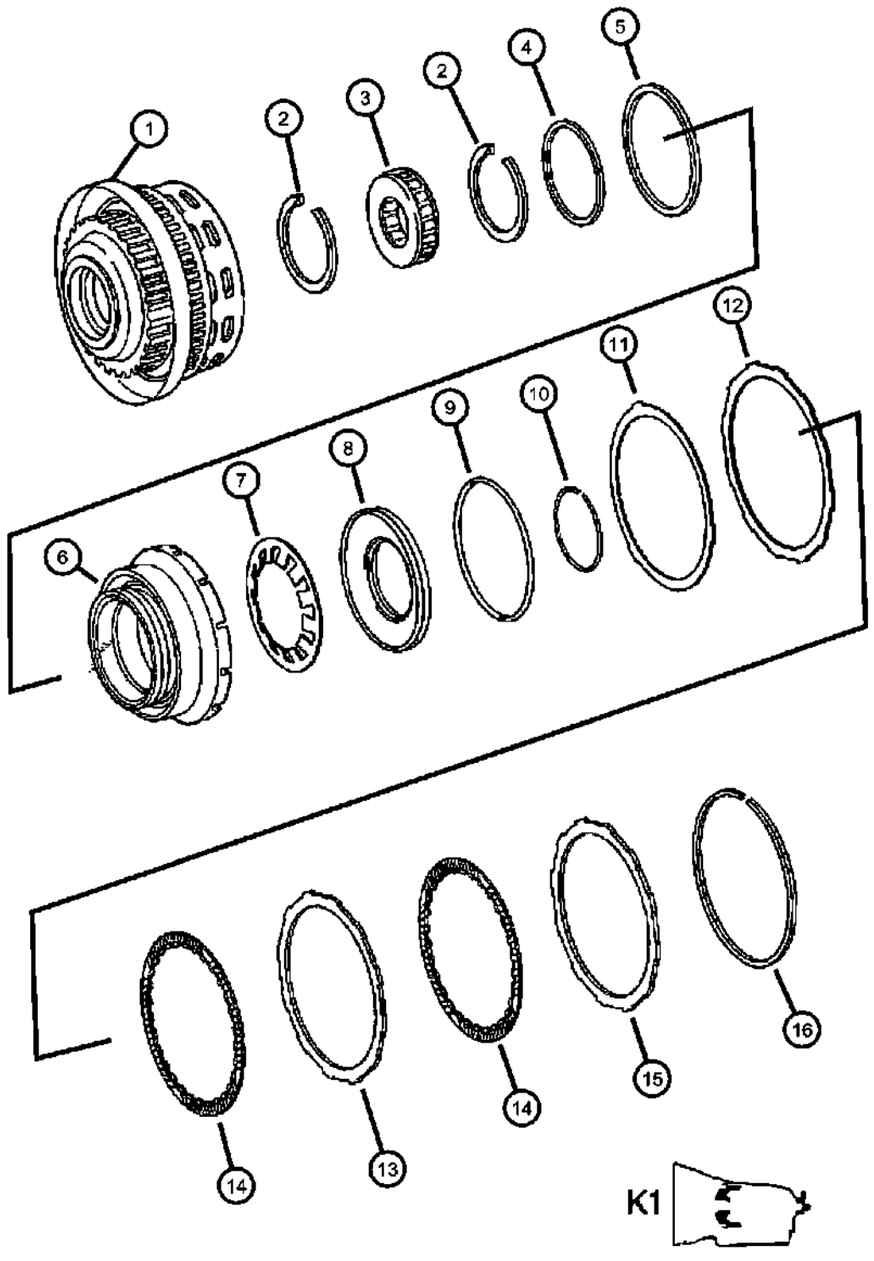

ITEM	PART NUMBER	QTY	LINE	SERIES	BODY	ENGINE	TRANS	TRIM	DESCRIPTION
NOTE:									
Sales Code:									
[DGZ]=5 Speed Automatic Transmission - [W5A380]									
[EGZ]=3.5L V-6 Gas Engine [Mercedes Benz]									
[EXM]=3.0L Turbo Diesel Engine [Mercedes Benz]									
1	05183860AA	1	2, 3, 6, 7	L		EG2	DGZ		DISC, Support
2	52107955AA	2	2, 3, 6, 7	L		EG2, EXM	DGZ		SNAP RING
3	52108342AB	1	2, 3, 6, 7	L		EG2, EXM	DGZ		CLUTCH, Front Sun Gear Sprag, Freewheel Unit
4	52107938AA	1	2, 3, 6, 7	L		EG2, EXM	DGZ		SEAL, Transmission
5	52107939AA	1	2, 3, 6, 7	L		EG2, EXM	DGZ		SEAL, Transmission
6	52108059AA	1	2, 3, 6, 7	L		EG2, EXM	DGZ		PISTON, K1 Clutch
7	52108057AA	1	2, 3, 6, 7	L		EG2, EXM	DGZ		SPRING, Piston Return
8	52108058AA	1	2, 3, 6, 7	L		EG2, EXM	DGZ		RETAINER, Spring
9	52107941AA	1	2, 3, 6, 7	L		EG2, EXM	DGZ		O RING
10	52107954AA	1	2, 3, 6, 7	L		EG2, EXM	DGZ		SNAP RING
11	52108024AA	1	2, 3, 6, 7	L		EG2, EXM	DGZ		DISC, Spring
12	52107992AA	1	2, 3, 6, 7	L		EG2, EXM	DGZ		DISC, Outer, [1.8MM]
13	52108508AA	4	2, 3, 6, 7	L		EG2, EXM	DGZ		DISC, Outer, [2.07MM]
14	52108507AA	6	2, 3, 6, 7	L		EG2, EXM	DGZ		DISC, Inner
15	52107994AA	1	2, 3, 6, 7	L		EG2, EXM	DGZ		DISC, Outer, [4.0MM]
16									SNAP RING
	52107949AA	AR	2, 3, 6, 7	L		EG2, EXM	DGZ		[2.6MM]
	52107950AA	AR	2, 3, 6, 7	L		EG2, EXM	DGZ		[2.9MM]
	52107951AA	AR	2, 3, 6, 7	L		EG2, EXM	DGZ		[3.2MM]
	52107952AA	AR	2, 3, 6, 7	L		EG2, EXM	DGZ		[3.5MM]
	52108373AA	AR	2, 3, 6, 7	L		EG2, EXM	DGZ		[3.8MM]

SPRINTER (VB)

SERIES	LINE	BODY	ENGINE	TRANSMISSION
L = LOWLINE	3 = HD DODGE 2WD 6 = Lt. Duty DODGE 4WD 2 = Med. Duty DODGE 2WD 7 = Med. Duty DODGE 4WD	17 = VAN WHEEL BASE 7 55 = WAGON WHEEL BASE 5 15 = VAN WHEEL BASE 5 53 = 119 WB 13 = 119 WB 05 = CAB CHASSIS WHEEL BASE 5 03 = CAB CHASSIS WHEEL BASE 3	EG2 = 3.5L V6 Gas Engine EXM = 3.0L V6 Turbo Diesel Engine	DGZ = 5-Speed Auto W5A380 Transmission

AR = use ase required - = Non illustrrated part

<< RETURN TO GROUP INDEX

K2 Clutch Assembly
Figure 021DGZ-528

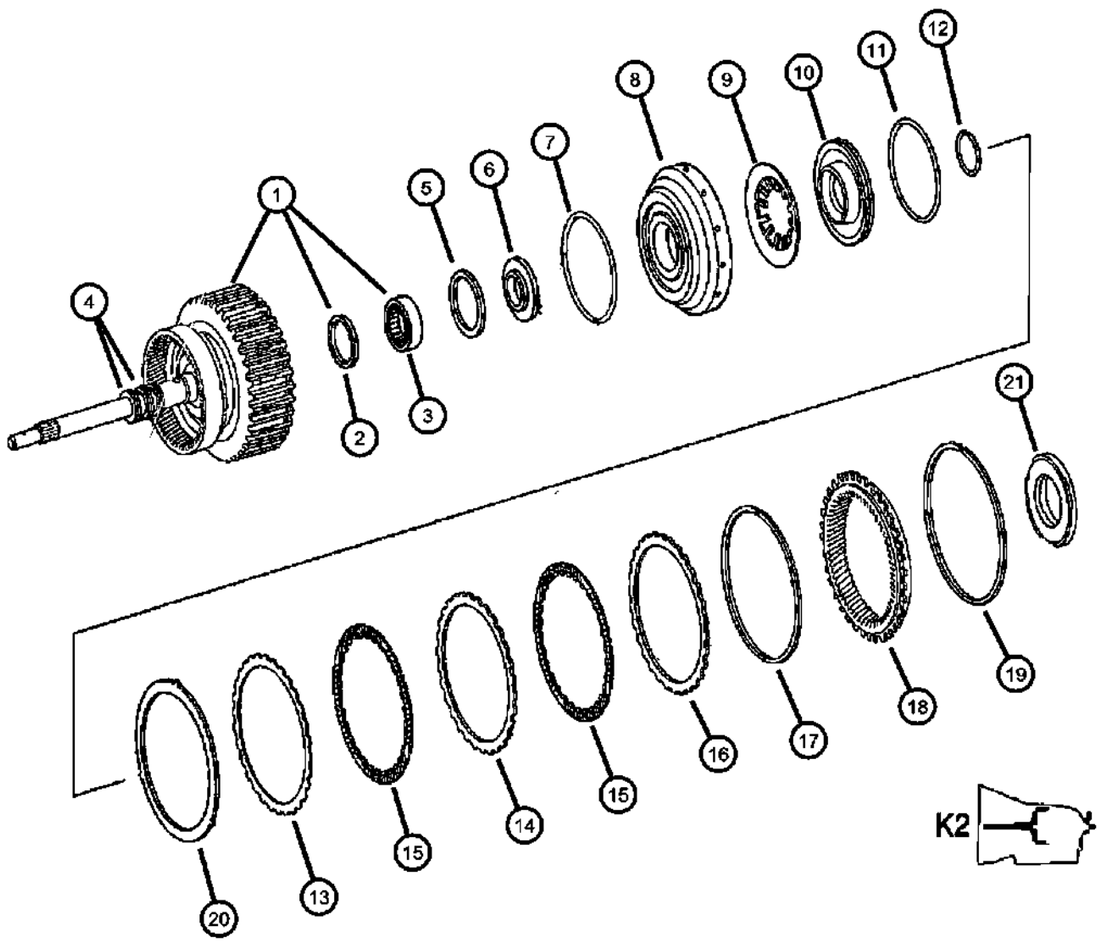

ITEM	PART NUMBER	QTY	LINE	SERIES	BODY	ENGINE	TRANS	TRIM	DESCRIPTION
NOTE:									
Sales Code:									
[DGZ]=5 Speed Automatic Transmission - [W5A380]									
[EGZ]=3.5L V-6 Gas Engine [Mercedes Benz]									
[EXM]=3.0L Turbo Diesel Engine [Mercedes Benz]									
1	52108044AA	1	2, 3, 6, 7	L		EG2, EXM	DGZ		SHAFT, Input
2	52108127AA	1	2, 3, 6, 7	L		EG2, EXM	DGZ		SEAL, Transmission
3	52108126AA	1	2, 3, 6, 7	L		EG2, EXM	DGZ		NEEDLE BEARING
4	05179366AA	3	2, 3, 6, 7	L		EG2, EXM	DGZ		SEAL, Transmission
5	52108134AA	1	2, 3, 6, 7	L		EG2, EXM	DGZ		SEAL, Transmission
6	52107928AA	1	2, 3, 6, 7	L		EG2, EXM	DGZ		RETAINER, Bearing
7	52108135AA	1	2, 3, 6, 7	L		EG2, EXM	DGZ		SEAL, Input Shaft
8									PISTON, K2 Clutch
	52108136AA	1	2, 3, 6, 7	L		EXM	DGZ		
	52108517AA	1	2, 3, 6, 7	L		EG2	DGZ		
9	52108137AA	1	2, 3, 6, 7	L		EG2, EXM	DGZ		SPRING, Piston Return
10	52108138AB	1	2, 3, 6, 7	L		EG2, EXM	DGZ		RETAINER, Spring
11	52108140AA	1	2, 3, 6, 7	L		EG2, EXM	DGZ		O RING
12	52107970AA	AR	2, 3, 6, 7	L		EG2, EXM	DGZ		SNAP RING
13	52107996AA	1	2, 3, 6, 7	L		EG2, EXM	DGZ		DISC, Outer, [1.8MM]
14	05174859AA	5	2, 3, 6, 7	L		EG2, EXM	DGZ		DISC, Outer, [2.8MM]
15	52108141AB	6	2, 3, 6, 7	L		EG2, EXM	DGZ		DISC, Inner
16	05174860AA	1	2, 3, 6, 7	L		EG2, EXM	DGZ		DISC, Outer, [4.0MM]
17									SNAP RING
	52107958AA	1	2, 3, 6, 7	L		EG2, EXM	DGZ		[2.3MM]
	52107959AA	1	2, 3, 6, 7	L		EG2, EXM	DGZ		[2.6MM]
	52107960AA	1	2, 3, 6, 7	L		EG2, EXM	DGZ		[2.9MM]
	52107961AA	1	2, 3, 6, 7	L		EG2, EXM	DGZ		[3.2MM]
	52107962AA	1	2, 3, 6, 7	L		EG2, EXM	DGZ		[3.5MM]
18	52107922AA	1	2, 3, 6, 7	L		EG2, EXM	DGZ		GEAR, Rear Annulus
19	52107926AA	1	2, 3, 6, 7	L		EG2, EXM	DGZ		SNAP RING
20	52108346AA	1	2, 3, 6, 7	L		EG2, EXM	DGZ		DISC, Spring
21	05138438AA	1	2, 3, 6, 7	L		EG2, EXM	DGZ		BEARING, Thrust

SPRINTER (VB)

SERIES	LINE	BODY	ENGINE	TRANSMISSION
L = LOWLINE	3 = HD DODGE 2WD 6 = Lt. Duty DODGE 4WD 2 = Med. Duty DODGE 2WD 7 = Med. Duty DODGE 4WD	17 = VAN WHEEL BASE 7 55 = WAGON WHEEL BASE 5 15 = VAN WHEEL BASE 5 53 = 119 WB 13 = 119 WB 05 = CAB CHASSIS WHEEL BASE 5 03 = CAB CHASSIS WHEEL BASE 3	EG2 = 3.5L V6 Gas Engine EXM = 3.0L V6 Turbo Diesel Engine	DGZ = 5-Speed Auto W5A380 Transmission

AR = use ase required - = Non illustrrated part

<< RETURN TO GROUP INDEX

K3 Clutch Assembly [DGZ]
Figure 021DGZ-529

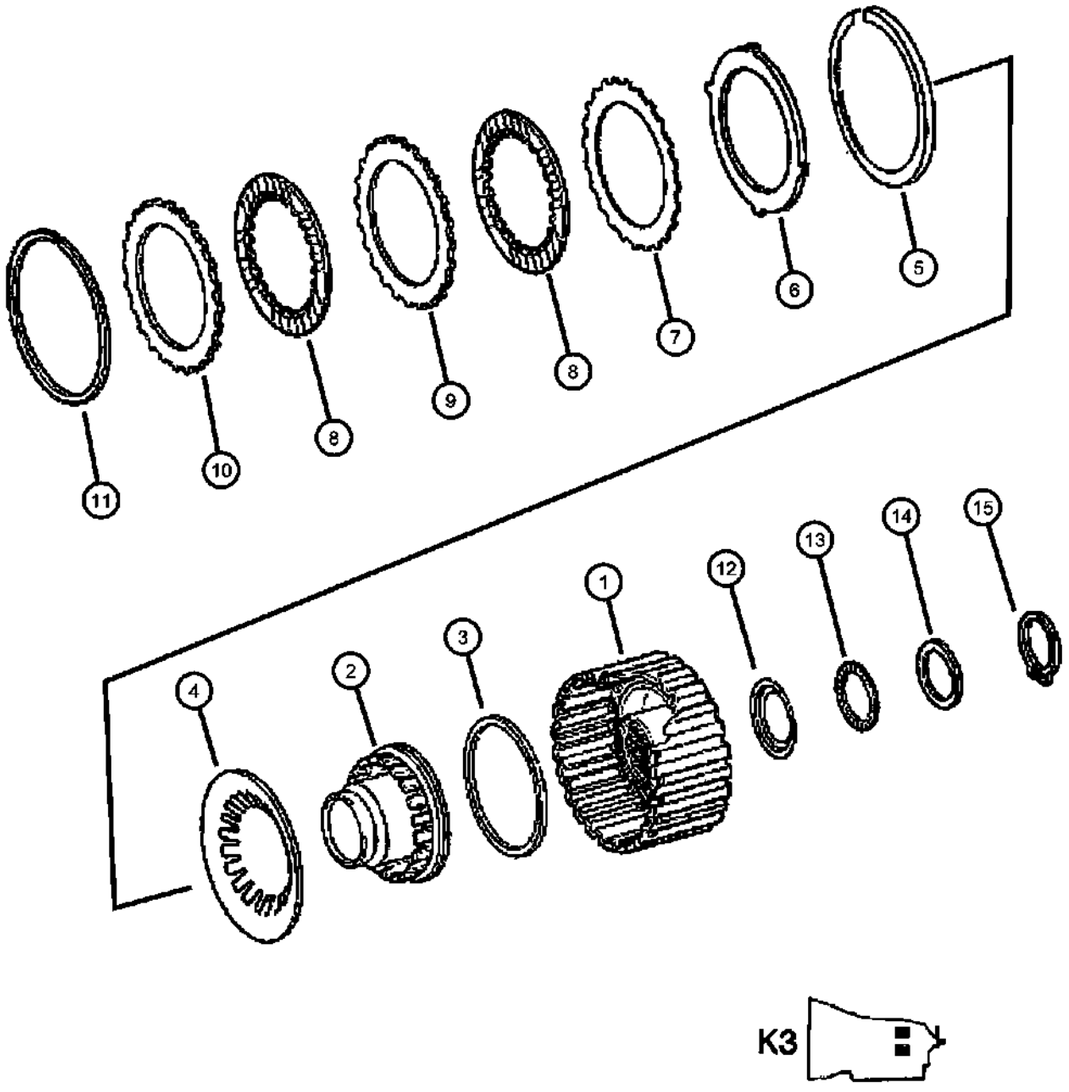

ITEM	PART NUMBER	QTY	LINE	SERIES	BODY	ENGINE	TRANS	TRIM	DESCRIPTION
NOTE:									
Sales Code:									
[DGZ]=5 Speed Automatic Transmission - [W5A380]									
[EGZ]=3.5L V-6 Gas Engine [Mercedes Benz]									
[EXM]=3.0L Turbo Diesel Engine [Mercedes Benz]									
1									RETAINER, K3 Clutch
	52108524AA	1	2, 3, 6, 7	L		EG2	DGZ		
	52108548AB	1	2, 3, 6, 7	L		EXM	DGZ		
2	52108094AA	1	2, 3, 6, 7	L		EG2, EXM	DGZ		PISTON, K3 Clutch
3	52108093AA	1	2, 3, 6, 7	L		EG2, EXM	DGZ		SEAL, Transmission
4	52108095AA	1	2, 3, 6, 7	L		EG2, EXM	DGZ		SPRING, Piston Return
5	52107968AA	1	2, 3, 6, 7	L		EG2, EXM	DGZ		SNAP RING
6	52108096AA	1	2, 3, 6, 7	L		EG2, EXM	DGZ		DISC, Spring
7	52108004AA	1	2, 3, 6, 7	L		EG2, EXM	DGZ		DISC, Outer, [1.8MM]
8	52108528AA	1	2, 3, 6, 7	L		EG2, EXM	DGZ		DISC, Inner
9	52108529AA	5	2, 3, 6, 7	L		EG2, EXM	DGZ		DISC, Outer
10	52108011AA	1	2, 3, 6, 7	L		EG2, EXM	DGZ		DISC, Outer
11									SNAP RING
	52107972AA	AR	2, 3, 6, 7	L		EG2, EXM	DGZ		[2.9MM]
	52107973AA	AR	2, 3, 6, 7	L		EG2, EXM	DGZ		[3.2MM]
	52107974AA	AR	2, 3, 6, 7	L		EG2, EXM	DGZ		[2.0MM]
	52107970AA	AR	2, 3, 6, 7	L		EG2, EXM	DGZ		[2.3MM]
	52107971AA	1	2, 3, 6, 7	L		EG2, EXM	DGZ		[2.6MM]
12	52108148AA	1	2, 3, 6, 7	L		EG2, EXM	DGZ		RETAINER, Bearing
13	52108152AA	1	2, 3, 6, 7	L		EG2, EXM	DGZ		NEEDLE BEARING
14									SPACER
	52108149AA	AR	2, 3, 6, 7	L		EG2, EXM	DGZ		[3.7MM]
	52108150AA	AR	2, 3, 6, 7	L		EG2, EXM	DGZ		[3.1MM]
	52108151AA	AR	2, 3, 6, 7	L		EG2, EXM	DGZ		[3.4MM]
15	06507358AA	1	2, 3, 6, 7	L		EG2, EXM	DGZ		SNAP RING, M35x2.5x1.5

SPRINTER (VB)

SERIES	LINE	BODY	ENGINE	TRANSMISSION
L = LOWLINE	3 = HD DODGE 2WD 6 = Lt. Duty DODGE 4WD 2 = Med. Duty DODGE 2WD 7 = Med. Duty DODGE 4WD	17 = VAN WHEEL BASE 7 55 = WAGON WHEEL BASE 5 15 = VAN WHEEL BASE 5 53 = 119 WB 13 = 119 WB 05 = CAB CHASSIS WHEEL BASE 5 03 = CAB CHASSIS WHEEL BASE 3	EG2 = 3.5L V6 Gas Engine EXM = 3.0L V6 Turbo Diesel Engine	DGZ = 5-Speed Auto W5A380 Transmission

AR = use ase required - = Non illustrrated part

2008 VB

<< RETURN TO GROUP INDEX

B2 / B3 Clutch Illustration 1 Of 3
Figure 021DGZ-530

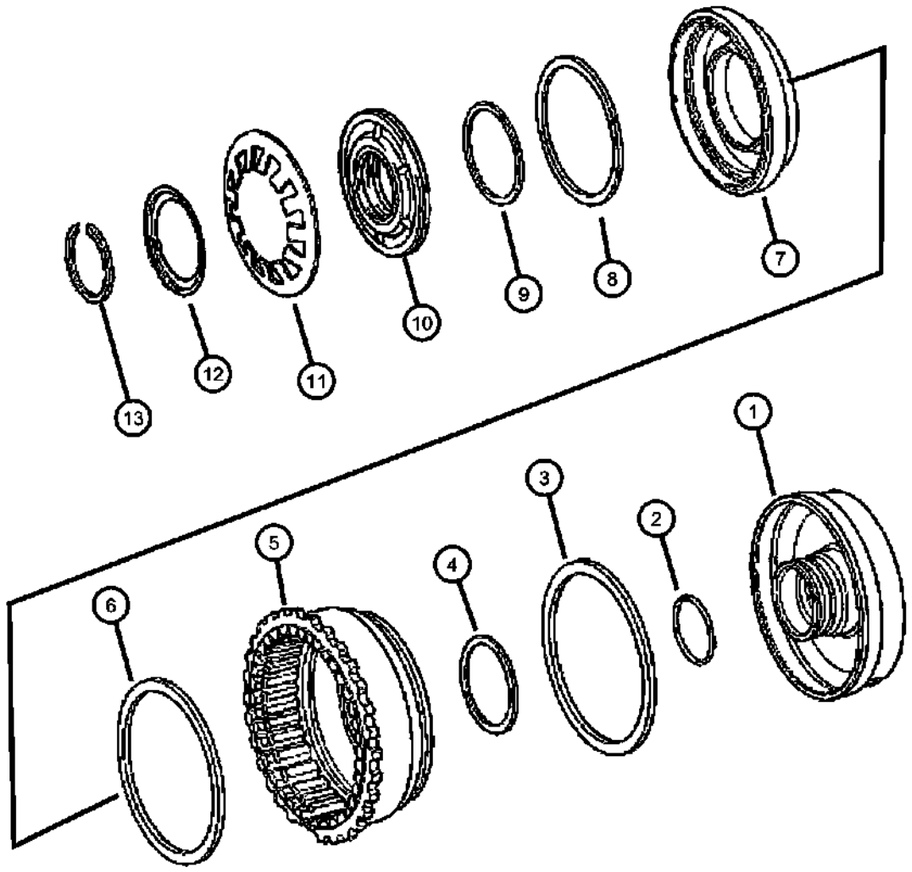

B2/B3

ITEM	PART NUMBER	QTY	LINE	SERIES	BODY	ENGINE	TRANS	TRIM	DESCRIPTION

NOTE:
Sales Code:
[DGZ]=5 Speed Automatic Transmission - [W5A380]
[EGZ]=3.5L V-6 Gas Engine [Mercedes Benz]
[EXM]=3.0L Turbo Diesel Engine [Mercedes Benz]

1	52108182AA	1	2, 3, 6, 7	L		EG2, EXM	DGZ		PLUNGER
2	52108185AA	2	2, 3, 6, 7	L		EG2, EXM	DGZ		O RING
3	52108188AA	1	2, 3, 6, 7	L		EG2, EXM	DGZ		SEAL, Transmission
4	52108189AA	1	2, 3, 6, 7	L		EG2, EXM	DGZ		SEAL, Transmission
5	52108395AA	1	2, 3, 6, 7	L		EG2, EXM	DGZ		RETAINER, Clutch
6	52108199AA	1	2, 3, 6, 7	L		EG2, EXM	DGZ		SEAL, Transmission
7	52108191AA	1	2, 3, 6, 7	L		EG2, EXM	DGZ		PISTON, B2 Clutch
8	52108200AA	1	2, 3, 6, 7	L		EG2, EXM	DGZ		SEAL, Transmission
9	52108201AA	1	2, 3, 6, 7	L		EG2, EXM	DGZ		SEAL, Transmission
10	52108351AA	1	2, 3, 6, 7	L		EG2, EXM	DGZ		RING ASSEMBLY, Piston guide
11	52108202AA	1	2, 3, 6, 7	L		EG2, EXM	DGZ		SPRING, Piston Return
12	52108203AA	1	2, 3, 6, 7	L		EG2, EXM	DGZ		RETAINER, Spring
13	52107977AA	1	2, 3, 6, 7	L		EG2, EXM	DGZ		SNAP RING

SPRINTER (VB)

SERIES	LINE	BODY	ENGINE	TRANSMISSION
L = LOWLINE	3 = HD DODGE 2WD 6 = Lt. Duty DODGE 4WD 2 = Med. Duty DODGE 2WD 7 = Med. Duty DODGE 4WD	17 = VAN WHEEL BASE 7 55 = WAGON WHEEL BASE 5 15 = VAN WHEEL BASE 5 53 = 119 WB 13 = 119 WB 05 = CAB CHASSIS WHEEL BASE 5 03 = CAB CHASSIS WHEEL BASE 3	EG2 = 3.5L V6 Gas Engine EXM = 3.0L V6 Turbo Diesel Engine	DGZ = 5-Speed Auto W5A380 Transmission

Multiple Disk Brake / [B2/B3] 2 Of 3
Figure 021DGZ-531

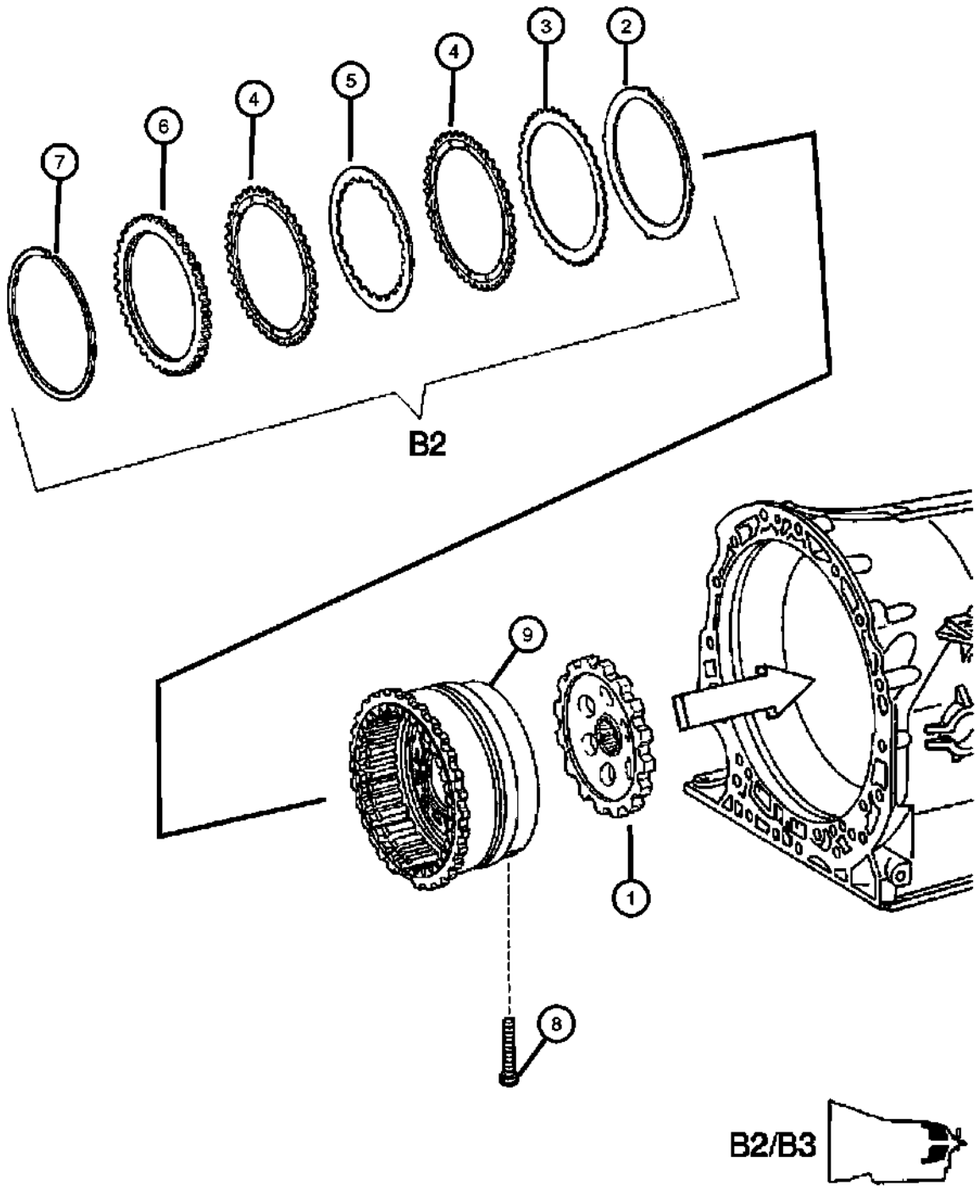

ITEM	PART NUMBER	QTY	LINE	SERIES	BODY	ENGINE	TRANS	TRIM	DESCRIPTION
									NOTE:Drum Package Is Not Serviced In An Assembly. Please See Illustration [#470] Callouts [1,2,3,4 & 5] To Obtain Part Numbers
									Sales Code:
									[DGZ]=5 Speed Automatic Transmission - [W5A380]
									[EGZ]=3.5L V-6 Gas Engine [Mercedes Benz]
									[EXM]=3.0L Turbo Di
1	05117843AA	1	2, 3, 6, 7	L					SPRAG, Transmission Parking
2	52108354AA	1	2, 3, 6, 7	L		EG2, EXM	DGZ		DISC, Spring
3	52108013AA	1	2, 3, 6, 7	L		EG2, EXM	DGZ		DISC, Outer, [1.8MM]
4	52108572AA	5	2, 3, 6, 7	L		EG2, EXM	DGZ		DISC, Outer
5	52108015AA	4	2, 3, 6, 7	L		EG2, EXM	DGZ		DISC, Inner
6	52108014AA	1	2, 3, 6, 7	L		EG2, EXM	DGZ		DISC, Outer, [6.5MM]
7									SNAP RING
	52107979AA	AR	2, 3, 6, 7	L		EG2, EXM	DGZ		[4.1MM]
	52107980AA	AR	2, 3, 6, 7	L		EG2, EXM	DGZ		[3.8MM]
	52107981AA	AR	2, 3, 6, 7	L		EG2, EXM	DGZ		[3.5MM]
	52107982AA	AR	2, 3, 6, 7	L		EG2, EXM	DGZ		[3.2MM]
	52107983AA	AR	2, 3, 6, 7	L		EG2, EXM	DGZ		[2.9MM]
8	52108205AA	2	2, 3, 6, 7	L		EG2, EXM	DGZ		BOLT, Torx Head, M8x60
9	52108205AA	2							DRUM, Note:Drum Package Is Not Serviced In An Assembly. Please See Illustration [#470] Callouts [1,2,3,4 & 5] To Obtain Part Numbers, (NOT SERVICED)

SPRINTER (VB)

SERIES	LINE	BODY	ENGINE	TRANSMISSION
L = LOWLINE	3 = HD DODGE 2WD 6 = Lt. Duty DODGE 4WD 2 = Med. Duty DODGE 2WD 7 = Med. Duty DODGE 4WD	17 = VAN WHEEL BASE 7 55 = WAGON WHEEL BASE 5 15 = VAN WHEEL BASE 5 53 = 119 WB 13 = 119 WB 05 = CAB CHASSIS WHEEL BASE 5 03 = CAB CHASSIS WHEEL BASE 3	EG2 = 3.5L V6 Gas Engine EXM = 3.0L V6 Turbo Diesel Engine	DGZ = 5-Speed Auto W5A380 Transmission

AR = use ase required - = Non illustrrated part

B2 / B3 Clutch Illustration 3 Of 3
Figure 021DGZ-532

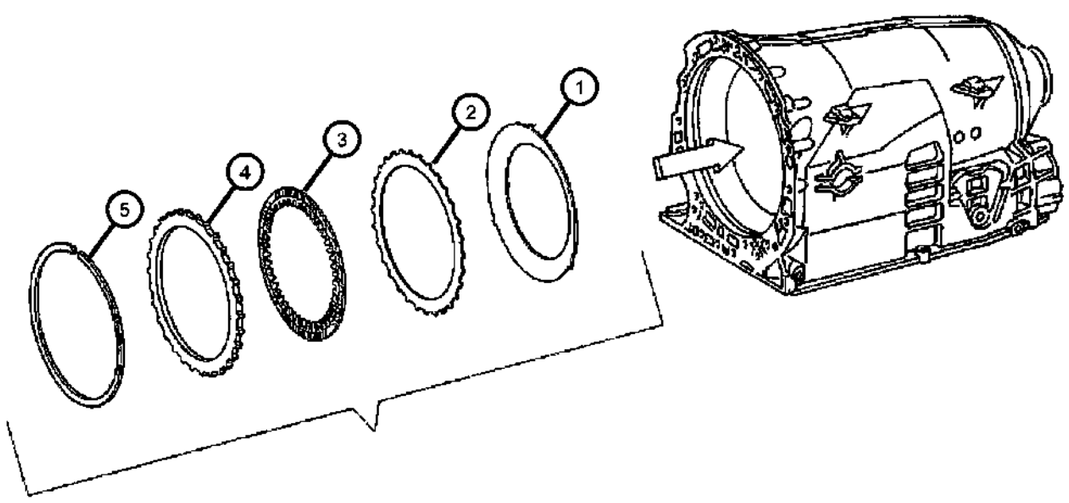

ITEM	PART NUMBER	QTY	LINE	SERIES	BODY	ENGINE	TRANS	TRIM	DESCRIPTION
NOTE:									
Sales Code:									
[DGZ]=5 Speed Automatic Transmission - [W5A380]									
[EGZ]=3.5L V-6 Gas Engine [Mercedes Benz]									
[EXM]=3.0L Turbo Diesel Engine [Mercedes Benz]									
1	52108356AA	1	2, 3, 6, 7	L		EG2, EXM	DGZ		DISC, Spring
2	52108017AA	5	2, 3, 6, 7	L		EG2, EXM	DGZ		DISC, Outer, [1.8MM]
3	52108573AA	4	2, 3, 6, 7	L		EG2, EXM	DGZ		DISC, Inner
4	52108018AA	1	2, 3, 6, 7	L		EG2, EXM	DGZ		DISC, Outer, [6.5MM]
5									SNAP RING
	52107986AA	AR	2, 3, 6, 7	L		EG2, EXM	DGZ		[3.5MM]
	52107987AA	AR	2, 3, 6, 7	L		EG2, EXM	DGZ		[3.8MM]
	52107988AA	AR	2, 3, 6, 7	L		EG2, EXM	DGZ		[4.1MM]
	52107989AA	AR	2, 3, 6, 7	L		EG2, EXM	DGZ		[4.4MM]
	52107990AA	AR	2, 3, 6, 7	L		EG2, EXM	DGZ		[4.8MM]
	52107985AA	AR	2, 3, 6, 7	L		EG2, EXM	DGZ		[3.2MM]



SPRINTER (VB)

SERIES	LINE	BODY	ENGINE	TRANSMISSION
L = LOWLINE	3 = HD DODGE 2WD 6 = Lt. Duty DODGE 4WD 2 = Med. Duty DODGE 2WD 7 = Med. Duty DODGE 4WD	17 = VAN WHEEL BASE 7 55 = WAGON WHEEL BASE 5 15 = VAN WHEEL BASE 5 53 = 119 WB 13 = 119 WB 05 = CAB CHASSIS WHEEL BASE 5 03 = CAB CHASSIS WHEEL BASE 3	EG2 = 3.5L V6 Gas Engine EXM = 3.0L V6 Turbo Diesel Engine	DGZ = 5-Speed Auto W5A380 Transmission

Front Planetary Carrier
Figure 021DGZ-611

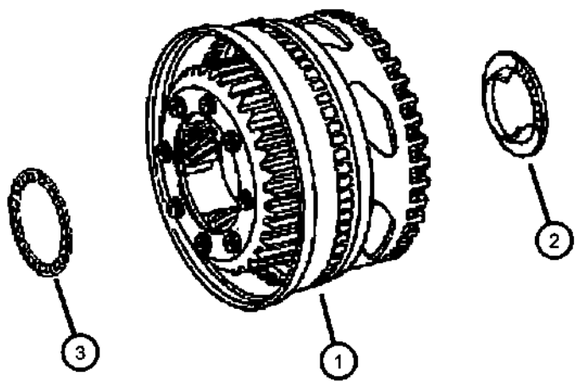

ITEM	PART NUMBER	QTY	LINE	SERIES	BODY	ENGINE	TRANS	TRIM	DESCRIPTION
NOTE:									
Sales Code:									
[DGZ]=5 Speed Automatic Transmission - [W5A380]									
[EGZ]=3.5L V-6 Gas Engine [Mercedes Benz]									
[EXM]=3.0L Turbo Diesel Engine [Mercedes Benz]									
1	52108513AA	1	2, 3, 6, 7	L		EG2, EXM	DGZ		CARRIER, Planetary
2	52108123AA	1	2, 3, 6, 7	L		EG2, EXM	DGZ		NEEDLE BEARING
3	52108122AA	1	2, 3, 6, 7	L		EXM, EG2	DGZ		NEEDLE BEARING



SPRINTER (VB)

SERIES	LINE	BODY	ENGINE	TRANSMISSION
L = LOWLINE	3 = HD DODGE 2WD 6 = Lt. Duty DODGE 4WD 2 = Med. Duty DODGE 2WD 7 = Med. Duty DODGE 4WD	17 = VAN WHEEL BASE 7 55 = WAGON WHEEL BASE 5 15 = VAN WHEEL BASE 5 53 = 119 WB 13 = 119 WB 05 = CAB CHASSIS WHEEL BASE 5 03 = CAB CHASSIS WHEEL BASE 3	EG2 = 3.5L V6 Gas Engine EXM = 3.0L V6 Turbo Diesel Engine	DGZ = 5-Speed Auto W5A380 Transmission

Output Shaft With Center And Rear Planetary Gear Sets
Figure 021DGZ-612

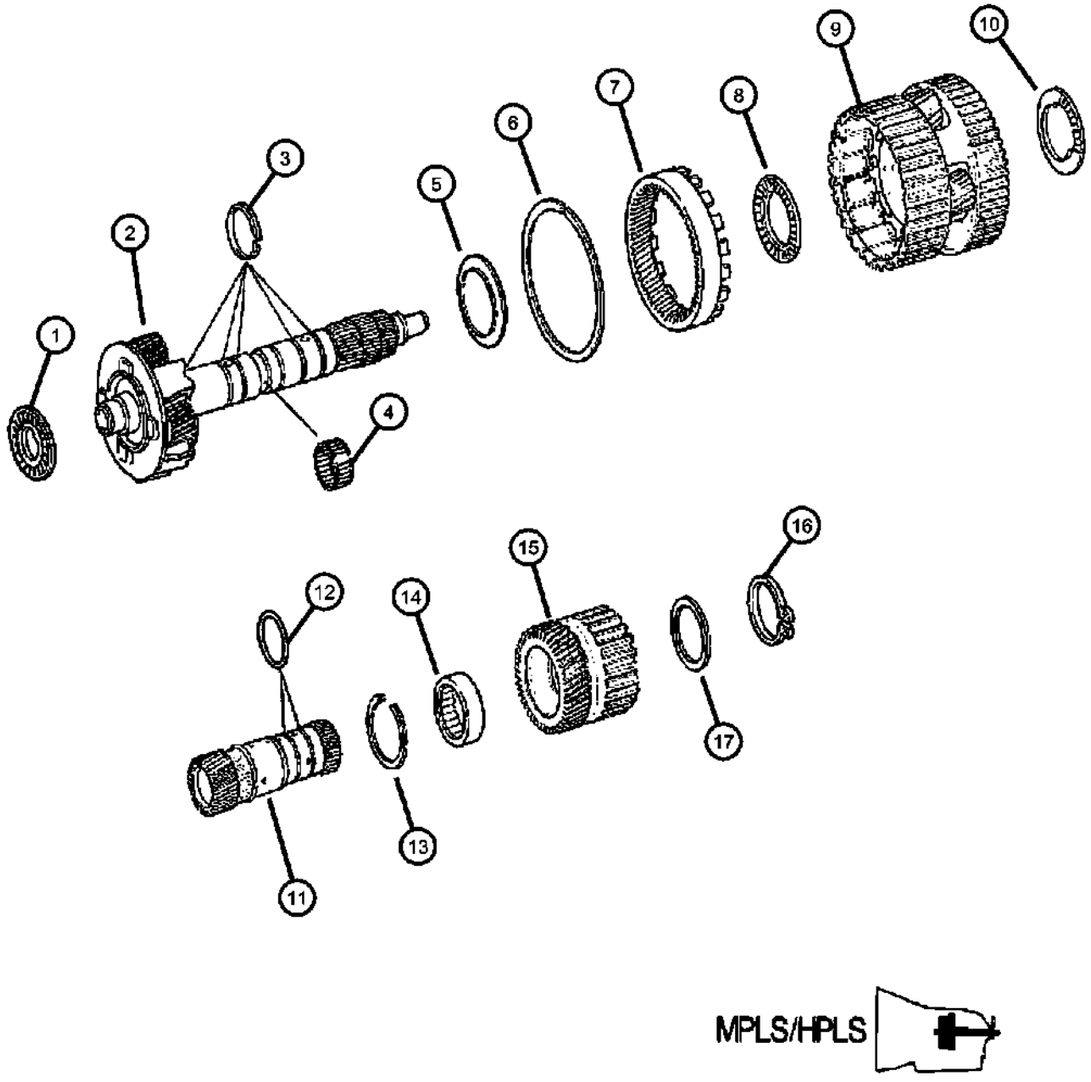

MPLS/HPLS

ITEM	PART NUMBER	QTY	LINE	SERIES	BODY	ENGINE	TRANS	TRIM	DESCRIPTION

NOTE:
Sales Code:
[DGZ]=5 Speed Automatic Transmission - [W5A380]
[EGZ]=3.5L V-6 Gas Engine [Mercedes Benz]
[EXM]=3.0L Turbo Diesel Engine [Mercedes Benz]

1	52107927AA	1	2, 3, 6, 7	L		EG2, EXM	DGZ		NEEDLE BEARING
2	52107929AA	1	2, 3, 6, 7	L		EG2, EXM	DGZ		SHAFT, Output
3	05179367AA	5	2, 3, 6, 7	L		EG2, EXM	DGZ		SEAL, Transmission
4	52108069AA	1	2, 3, 6, 7	L		EG2, EXM	DGZ		NEEDLE BEARING
5	52108070AA	1	2, 3, 6, 7	L		EG2, EXM	DGZ		RETAINER, Bearing
6	52108374AA	1	2, 3, 6, 7	L		EG2, EXM	DGZ		SNAP RING
7	52108376AA	1	2, 3, 6, 7	L		EG2, EXM	DGZ		GEAR, Annulus
8	52107931AA	1	2, 3, 6, 7	L		EG2, EXM	DGZ		NEEDLE BEARING
9	52108072AA	1	2, 3, 6, 7	L		EG2, EXM	DGZ		CARRIER, Planetary
10	52107932AA	1	2, 3, 6, 7	L		EG2, EXM	DGZ		NEEDLE BEARING
11	52108078AA	1	2, 3, 6, 7	L		EG2, EXM	DGZ		GEAR, Sun
12	52108085AA	2	2, 3, 6, 7	L		EG2, EXM	DGZ		O RING
13	52107966AA	1	2, 3, 6, 7	L		EG2, EXM	DGZ		SNAP RING
14	52108522AA	1	2, 3, 6, 7	L		EG2, EXM	DGZ		CLUTCH, One Way
15	52108519AA	1	2, 3, 6, 7	L		EG2, EXM	DGZ		SUN GEAR ASSEMBLY
16	52107967AA	1	2, 3, 6, 7	L		EG2, EXM	DGZ		SNAP RING
17	52108379AA	1	2, 3, 6, 7	L		EG2, EXM	DGZ		SPACER

SPRINTER (VB)

SERIES	LINE	BODY	ENGINE	TRANSMISSION
L = LOWLINE	3 = HD DODGE 2WD 6 = Lt. Duty DODGE 4WD 2 = Med. Duty DODGE 2WD 7 = Med. Duty DODGE 4WD	17 = VAN WHEEL BASE 7 55 = WAGON WHEEL BASE 5 15 = VAN WHEEL BASE 5 53 = 119 WB 13 = 119 WB 05 = CAB CHASSIS WHEEL BASE 5 03 = CAB CHASSIS WHEEL BASE 3	EG2 = 3.5L V6 Gas Engine EXM = 3.0L V6 Turbo Diesel Engine	DGZ = 5-Speed Auto W5A380 Transmission

Valve Body And Related Parts
Figure 021DGZ-825

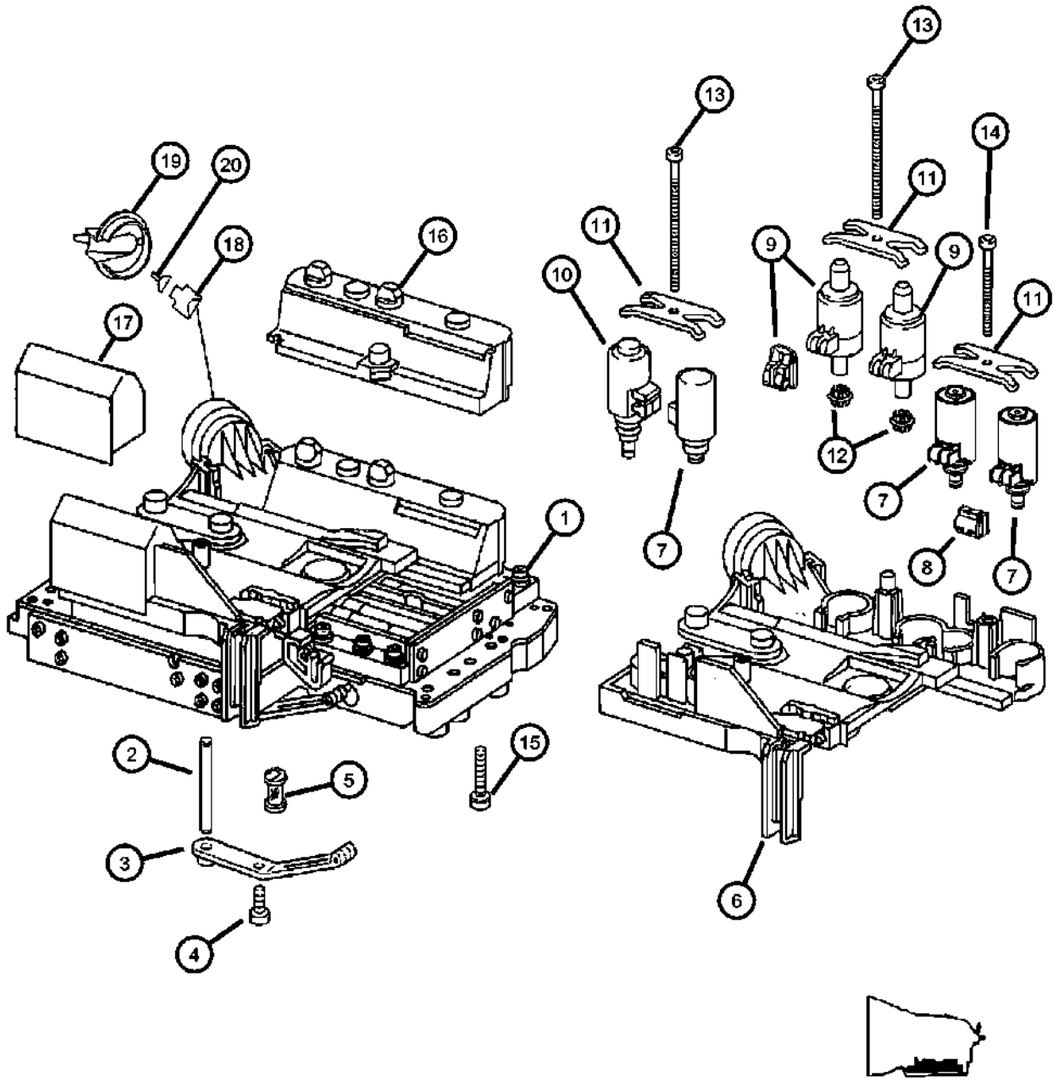

ITEM	PART NUMBER	QTY	LINE	SERIES	BODY	ENGINE	TRANS	TRIM	DESCRIPTION
NOTE:									
Sales Code:									
[DGZ]=5 Speed Automatic Transmission - [W5A380]									
[EGZ]=3.5L V-6 Gas Engine [Mercedes Benz]									
[EXM]=3.0L Turbo Diesel Engine [Mercedes Benz]									
1	05138813AA	1	2, 3, 6, 7	L		EG2, EXM	DGZ		VALVE BODY, Complete
2	52108277AA	1	2, 3, 6, 7	L		EG2, EXM	DGZ		DOWEL
3	52108258AA	1	2, 3, 6, 7	L		EG2, EXM	DGZ		DETENT, Valve Body
4	52108266AB	1	2, 3, 6, 7	L		EG2, EXM	DGZ		BOLT, Torx Head, M6x12
5	52108316AA	1	2, 3, 6, 7	L		EG2, EXM	DGZ		FILTER, Transmission Oil
6	05097219AA	1	2, 3, 6, 7	L		EG2, EXM	DGZ		CONNECTOR ASSEMBLY, Electrical
7	52108313AA	3	2, 3, 6, 7	L		EG2, EXM	DGZ		SOLENOID, Transmission, [PMW] Valve / Selector VAlve
8	05134761AA	3	2, 3, 6, 7	L		EG2, EXM	DGZ		CAP, Solenoid
9	05138838AA	2	2, 3, 6, 7	L		EG2, EXM	DGZ		SOLENOID, Transmission, Pressure Control Valve
10	52108314AA	1	2, 3, 6, 7	L		EG2, EXM	DGZ		SOLENOID, Transmission, [PWM]
11	52108315AA	3	2, 3, 6, 7	L		EG2, EXM	DGZ		PLATE
12	52108316AA	1	2, 3, 6, 7	L		EXM, EG2	DGZ		FILTER, Transmission Oil
13	52108268AA	2	2, 3, 6, 7	L		EG2, EXM	DGZ		BOLT, Torx Head, M6x80
14	52108269AA	1	2, 3, 6, 7	L		EG2, EXM	DGZ		BOLT, Torx Head, M6x55
15	52108267AA	29	2, 3, 6, 7	L		EG2, EXM	DGZ		BOLT, Torx Head, M6x30
16	52108320AA	1	2, 3, 6, 7	L		EG2, EXM	DGZ		SHIELD, Transmission Solenoid
17	52108321AA	1	2, 3, 6, 7	L		EG2, EXM	DGZ		SHIELD, Transmission Solenoid
18	52108321AA	1							CONNECTOR, See Illustration [705] For Service Parts, (NOT SERVICED)
19	52108321AA	1							CAP, See Illustration [705] For Service Parts, (NOT SERVICED)
20	52108321AA	1							REPAIR KIT, See Illustration [705] For Service Parts, (NOT SERVICED)

SPRINTER (VB)

SERIES	LINE	BODY	ENGINE	TRANSMISSION
L = LOWLINE	3 = HD DODGE 2WD 6 = Lt. Duty DODGE 4WD 2 = Med. Duty DODGE 2WD 7 = Med. Duty DODGE 4WD	17 = VAN WHEEL BASE 7 55 = WAGON WHEEL BASE 5 15 = VAN WHEEL BASE 5 53 = 119 WB 13 = 119 WB 05 = CAB CHASSIS WHEEL BASE 5 03 = CAB CHASSIS WHEEL BASE 3	EG2 = 3.5L V6 Gas Engine EXM = 3.0L V6 Turbo Diesel Engine	DGZ = 5-Speed Auto W5A380 Transmission

Connector Repair
Figure 021DGZ-826

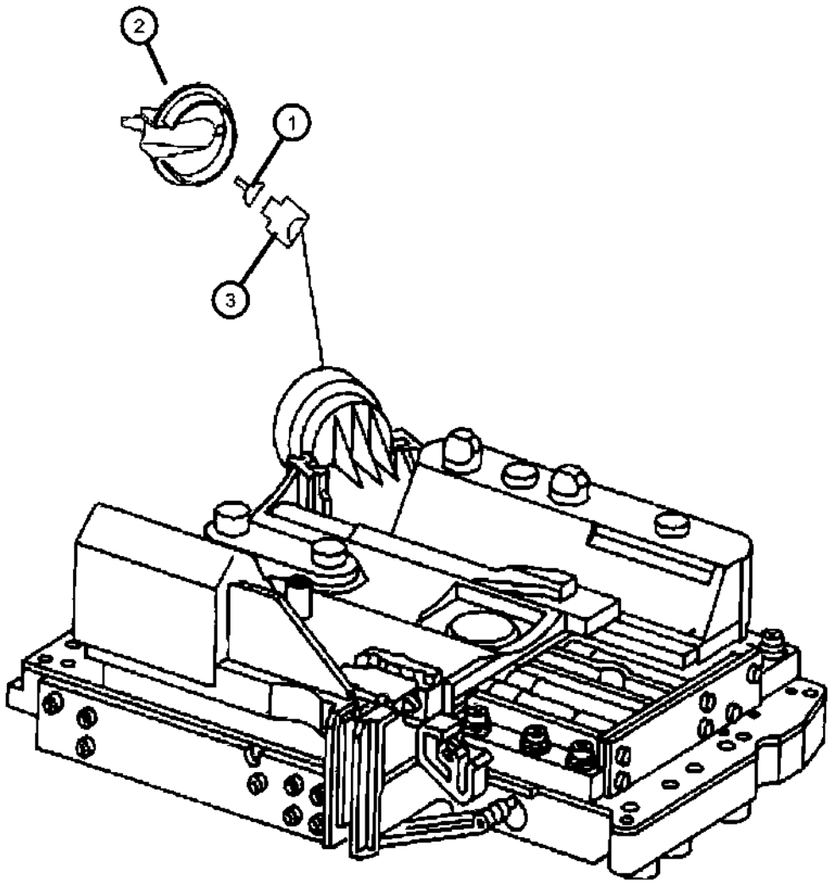

ITEM	PART NUMBER	QTY	LINE	SERIES	BODY	ENGINE	TRANS	TRIM	DESCRIPTION
1	05142110AA	1	2, 3, 6, 7	L		EG2, EXM	DGZ		WIRING, Repair Harness
2	05120884AA	1	2, 3, 6, 7	L		EG2, EXM	DGZ		CAP
3	05120265AA	1	2, 3, 6, 7	L		EG2, EXM	DGZ		CONNECTOR
-4	05135804AA	1	2, 3, 6, 7	L		EG2, EXM	DGZ		TUBE, Heat Shrink, [Green / 0.7 - 2.4 MM2]
-5									TUBING, Heat Shrinkable
	05135848AA	1	2, 3, 6, 7	L		EG2, EXM	DGZ		[Red / 2.0 - 4.0 MM2]
	05135849AA	1	2, 3, 6, 7	L		EG2, EXM	DGZ		[Blue / 3.5 - 8.0 MM2]
	05135850AA	1	2, 3, 6, 7	L		EXM, EG2	DGZ		[Yellow / 7.5 - 12.0 MM2]
-6									TUBING, Heat Shrinkable
	05135851AA	1	2, 3, 6, 7	L		EG2, EXM	DGZ		Joint [0.5 MM2]
	05135852AA	1	2, 3, 6, 7	L		EG2, EXM	DGZ		Joint [0.8 MM2]
	05135853AA	1	2, 3, 6, 7	L		EG2, EXM	DGZ		Joint [1.3 MM2]
	05135854AA	1	2, 3, 6, 7	L		EG2, EXM	DGZ		Joint [2.0 MM2]

SPRINTER (VB)

SERIES	LINE	BODY	ENGINE	TRANSMISSION
L = LOWLINE	3 = HD DODGE 2WD 6 = Lt. Duty DODGE 4WD 2 = Med. Duty DODGE 2WD 7 = Med. Duty DODGE 4WD	17 = VAN WHEEL BASE 7 55 = WAGON WHEEL BASE 5 15 = VAN WHEEL BASE 5 53 = 119 WB 13 = 119 WB 05 = CAB CHASSIS WHEEL BASE 5 03 = CAB CHASSIS WHEEL BASE 3	EG2 = 3.5L V6 Gas Engine EXM = 3.0L V6 Turbo Diesel Engine	DGZ = 5-Speed Auto W5A380 Transmission

Gearshift Controls
Figure 021DGZ-1105

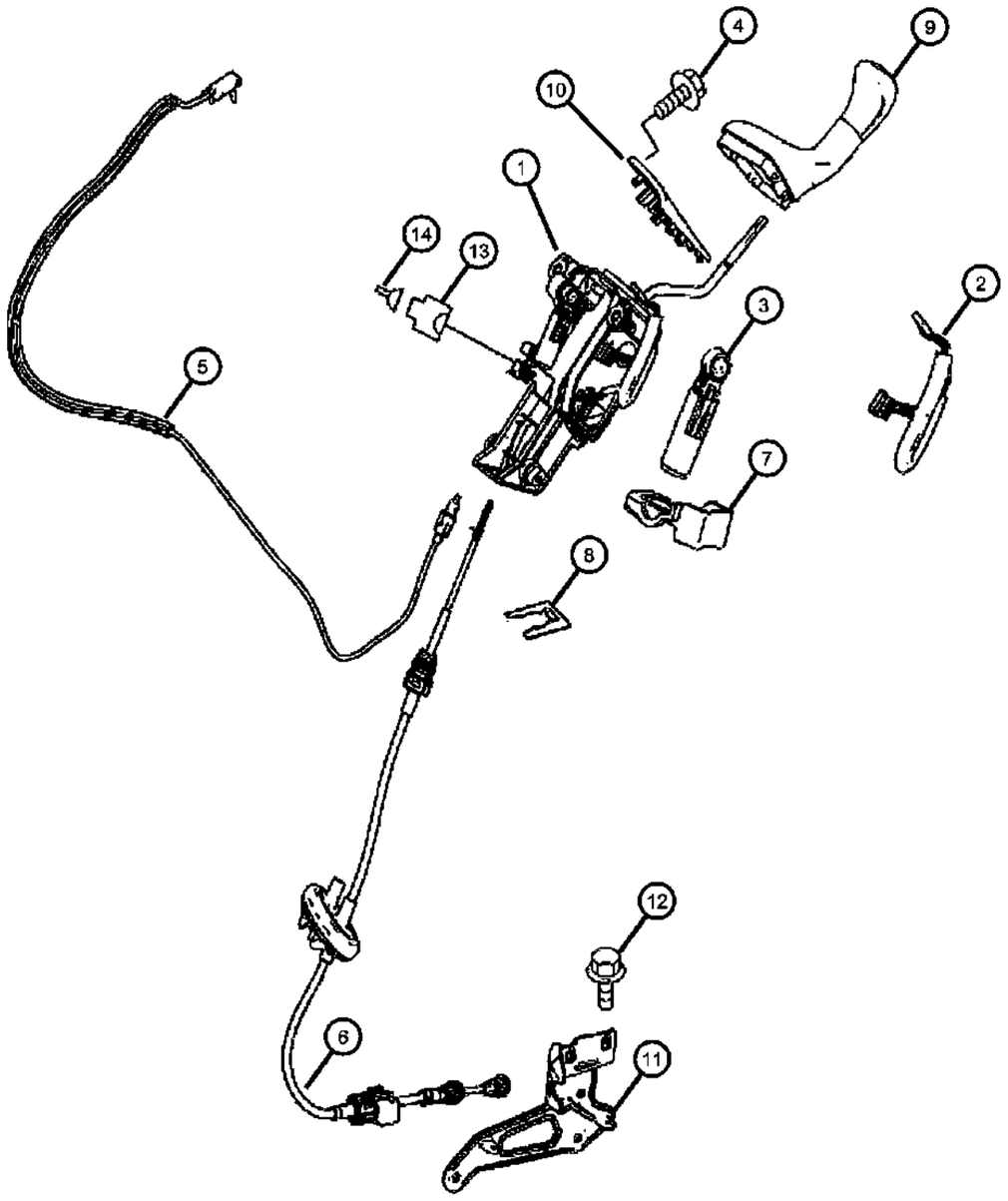

ITEM	PART NUMBER	QTY	LINE	SERIES	BODY	ENGINE	TRANS	TRIM	DESCRIPTION
NOTE:									
Sales Code:									
[DGZ]=5 Speed Automatic Transmission - [W5A380]									
[EGZ]=3.5L V-6 Gas Engine [Mercedes Benz]									
[EXM]=3.0L Turbo Diesel Engine [Mercedes Benz]									
1	68012893AA	1	2, 3, 6, 7	L		EG2, EXM	DGZ		SHIFTER, Transmission
2	68027699AA	1	2, 3, 6, 7	L		EG2, EXM	DGZ		HARNESS, Wiring
3	68027702AA	1	2, 3, 6, 7	L		EG2, EXM	DGZ		ADJUSTER
4	06104025AA	2	2, 3, 6, 7	L		EG2, EXM	DGZ		BOLT, Hex Flange Head, M8x1.25x30
5	68012899AA	1	2, 3, 6, 7	L		EG2, EXM	DGZ		CABLE, Gear Selector, Inter Lock Cable
6	68012898AA	1	2, 3, 6, 7	L		EG2, EXM	DGZ		CABLE, Gear Selector
7	68027704AA	1	2, 3, 6, 7	L		EG2, EXM	DGZ		RETAINER
8									CLIP, Cable
	05117823AA	1	3, 7	L		EG2, EXM	DGZ		
		1	2, 3, 6, 7	L		EG2, EXM	DGZ		
9	68012900AA	1	2, 3, 6, 7	L		EG2, EXM	DGZ		KNOB, Gearshift
10	68012901AA	1	2, 3, 6, 7	L		EG2, EXM	DGZ		COVER, Gearshift
11	68013694AA	1	2, 3, 6, 7	L		EG2, EXM	DGZ		BRACKET, Gearshift
12	06104695AA	3	2, 3, 6, 7	L		EG2, EXM	DGZ		SCREW
13	68010053AA	1	2, 3, 6, 7	L		EG2, EXM	DGZ		CONNECTOR, [8-Pin - N1 5/5]
14									TERMINAL
	05103873AA	3	3, 7	L		EG2, EXM	DGZ		[0.75 MM2 MQS - N1 5/5]
		3	2, 3, 6, 7	L		EG2, EXM	DGZ		[0.75 MM2 MQS - N1 5/5]

SPRINTER (VB)

SERIES	LINE	BODY	ENGINE	TRANSMISSION
L = LOWLINE	3 = HD DODGE 2WD 6 = Lt. Duty DODGE 4WD 2 = Med. Duty DODGE 2WD 7 = Med. Duty DODGE 4WD	17 = VAN WHEEL BASE 7 55 = WAGON WHEEL BASE 5 15 = VAN WHEEL BASE 5 53 = 119 WB 13 = 119 WB 05 = CAB CHASSIS WHEEL BASE 5 03 = CAB CHASSIS WHEEL BASE 3	EG2 = 3.5L V6 Gas Engine EXM = 3.0L V6 Turbo Diesel Engine	DGZ = 5-Speed Auto W5A380 Transmission

Mounting Covers And Shields
Figure 021DGZ-1205

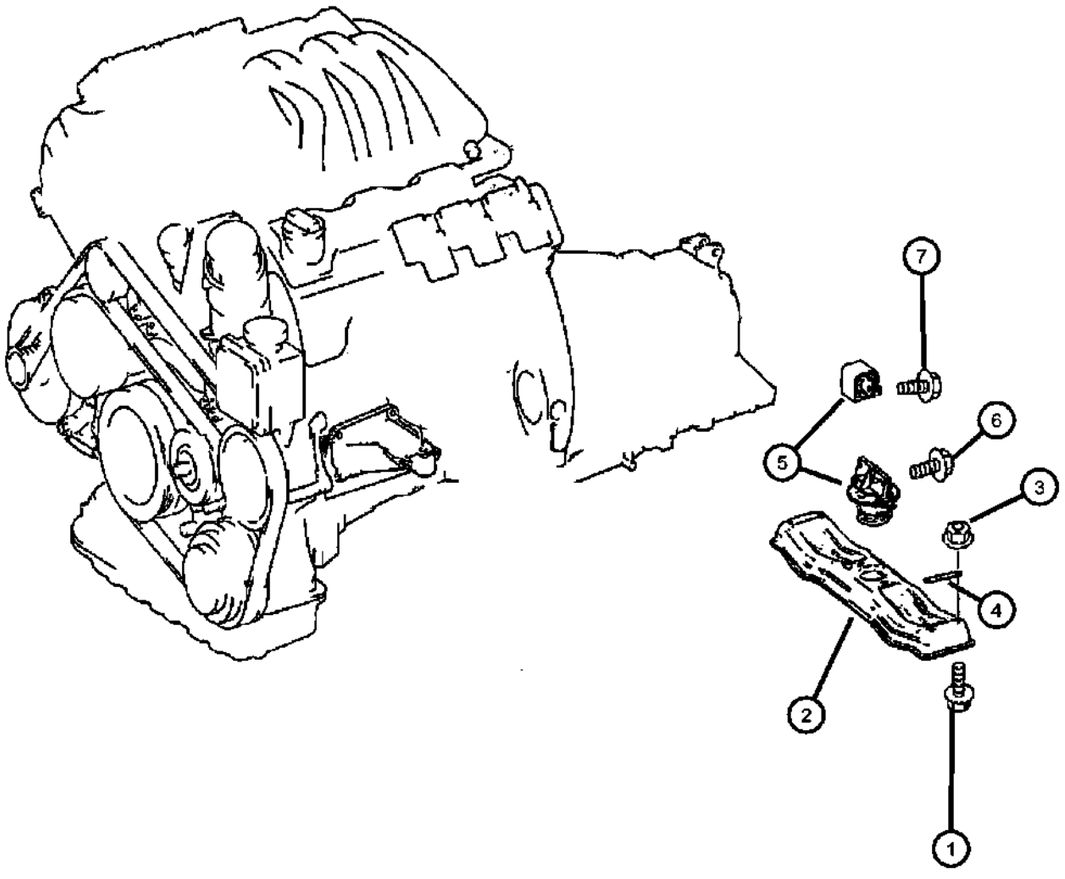

ITEM	PART NUMBER	QTY	LINE	SERIES	BODY	ENGINE	TRANS	TRIM	DESCRIPTION
1	06104222AA	4	2, 3, 6, 7	L		EG2, EXM	DGZ		BOLT, Hex Flange Head, [M10x60]
2									SUPPORT
	68013724AA	1	3, 7	L		EG2, EXM	DGZ		
	68013734AA	1	2, 6	L		EG2, EXM	DGZ		
3	06105170AA	2	2, 3, 6, 7	L		EG2, EXM	DGZ		NUT
4	68013726AA	2	2, 3, 6, 7	L		EG2, EXM	DGZ		REINFORCEMENT, Bolt Support Brace
5									RUBBER, RUBBER-MOUNT
	68013684AA	1	3, 7	L		EG2, EXM	DGZ		
	68013685AA	1	2, 6	L		EG2, EXM	DGZ		
6	05097692AA	4	2, 6	L		EG2, EXM	DGZ		SCREW, M8x20, [M8x20]
7	06104215AA	2	2, 3, 6, 7	L		EG2, EXM	DGZ		BOLT, Hex Flange Head, M10x1.50x25.00

SPRINTER (VB)

SERIES	LINE	BODY	ENGINE	TRANSMISSION
L = LOWLINE	3 = HD DODGE 2WD 6 = Lt. Duty DODGE 4WD 2 = Med. Duty DODGE 2WD 7 = Med. Duty DODGE 4WD	17 = VAN WHEEL BASE 7 55 = WAGON WHEEL BASE 5 15 = VAN WHEEL BASE 5 53 = 119 WB 13 = 119 WB 05 = CAB CHASSIS WHEEL BASE 5 03 = CAB CHASSIS WHEEL BASE 3	EG2 = 3.5L V6 Gas Engine EXM = 3.0L V6 Turbo Diesel Engine	DGZ = 5-Speed Auto W5A380 Transmission

Group - 22
Wheels

Illustration Title — Group-Fig. No.

Wheels, Tires and Hardware
Wheels and Hardware ..... Fig. 22 - 105

Wheel Covers and Center Caps
Wheels and Hardware ..... Fig. 22 - 201

Jack Stowage
Jack Assembly ..... Fig. 22 - 305

022-100 Wheels, Tires and Hardware	**022-200** Wheel Covers and Center Caps	**022-300** Jack Stowage	

Wheels and Hardware
Figure 22-105

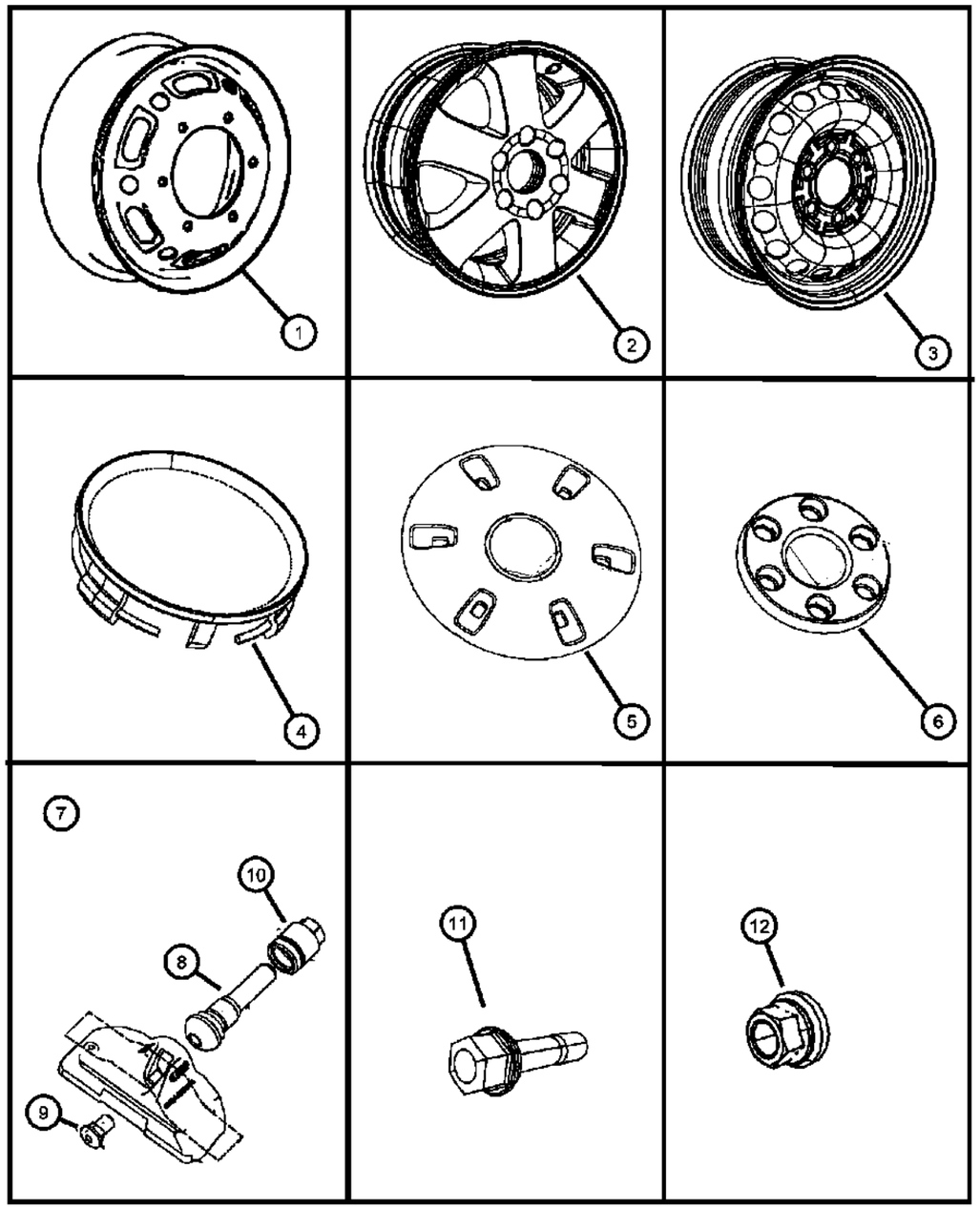

ITEM	PART NUMBER	QTY	LINE	SERIES	BODY	ENGINE	TRANS	TRIM	DESCRIPTION
1									WHEEL, Steel
	1JJ25DX9AA	6	3, 7	L					Black Steel Wheel / With [WWA + WDK] Without [WWW]
	1JJ25P01AA	6	3, 7	L					White Steel Wheel / With [WWW + WDK] Without [WWA]
	1JJ25SZ0AA	6	3, 7	L					Silver Steel Wheel / With [WDK] Without [-WWA-WWW]
2	68004980AA	4	2, 6	L	13, 15, 17, 53, 55				WHEEL, Aluminum, With [WNB]
3									WHEEL, Steel
	1VB07DX9AA	4	2, 6	L					Black Steel Wheel / With [WWA + WDG]
	1VB07P01AA	4	2, 6	L					White Steel Wheel / With [WWW + WDG]]
	1VB07SZ0AA	4	2, 6	L					Silver Steel Wheel / With [WDG] Without [WWA & WWW]
4	05104570AA	4	2, 6	L	13, 15, 17, 53, 55				CAP, Wheel Center, With [WNB]
5	68025431AA	4	2, 6	L	13, 15, 17, 53, 55				CAP, Wheel Center, With [WDG]
6	68025430AA	2	3, 7	L	03, 05, 13, 15, 17				CAP, Wheel Center, With [WDK]
7	68006771AA	4	2, 6	L					SENSOR, Tire Pressure, Valve stem, With [LAB]
8									STEM, Wheel Valve
	05175255AA	1	2, 3, 6, 7	L					With [WLB]
	68004983AA	2	3, 7	L					Without [LAB]
	68006772AA	99	3, 7	L					Standard Valve
	68006773AA	4	2, 6	L					With [LAB]
9	68006774AA	4	2, 6	L					NUT, Tire Pressure Sensor, With [LAB]
10	68006775AA	4	2, 6	L					CAP, Valve stem, With [LAB]
11									BOLT
	68006805AA	24	2, 6	L					Mounting Wheel Stud / With [WDG]
	68013444AA	24	2, 6	L	13, 15, 17, 53, 55				Mounting Wheel Stud / With [WNB]
12	68013445AA	24	3, 7	L	03, 05, 13, 15, 17				NUT, With [WDK]
-13									LABEL, Tire Pressure

SPRINTER (VB)

SERIES	LINE	BODY	ENGINE	TRANSMISSION
L = LOWLINE	3 = HD DODGE 2WD 6 = Lt. Duty DODGE 4WD 2 = Med. Duty DODGE 2WD 7 = Med. Duty DODGE 4WD	17 = VAN WHEEL BASE 7 55 = WAGON WHEEL BASE 5 15 = VAN WHEEL BASE 5 53 = 119 WB 13 = 119 WB 05 = CAB CHASSIS WHEEL BASE 5 03 = CAB CHASSIS WHEEL BASE 3	EG2 = 3.5L V6 Gas Engine EXM = 3.0L V6 Turbo Diesel Engine	DGZ = 5-Speed Auto W5A380 Transmission

AR = use ase required - = Non illustrrated part

<< RETURN TO GROUP INDEX

Wheels and Hardware
Figure 22-105

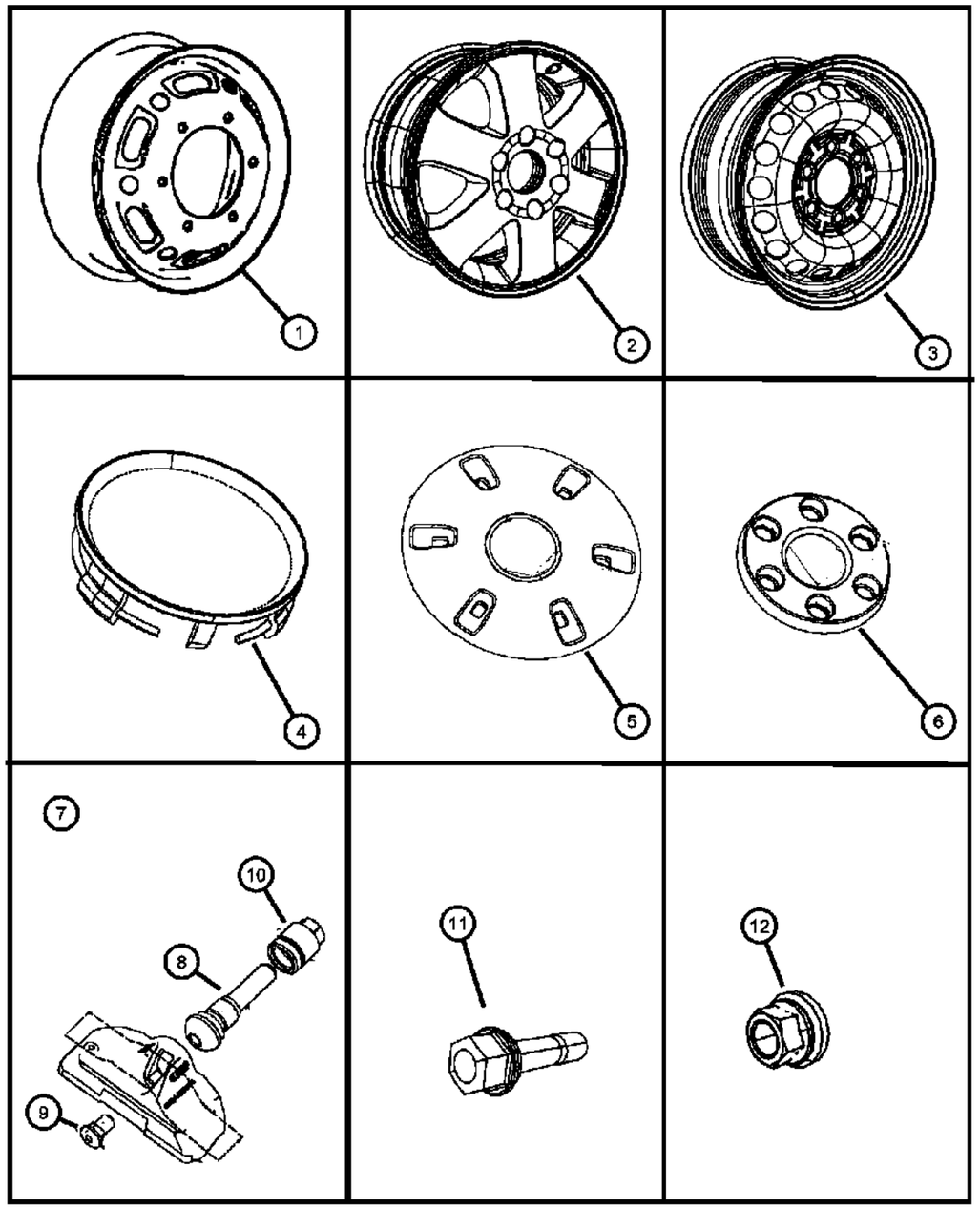

ITEM	PART NUMBER	QTY	LINE	SERIES	BODY	ENGINE	TRANS	TRIM	DESCRIPTION
	68013454AA	1	2, 3, 6, 7	L					Without [LAB]
	68022059AA	4	2, 3, 6, 7	L					With [LAB]

SPRINTER (VB)

SERIES	LINE	BODY	ENGINE	TRANSMISSION
L = LOWLINE	3 = HD DODGE 2WD 6 = Lt. Duty DODGE 4WD 2 = Med. Duty DODGE 2WD 7 = Med. Duty DODGE 4WD	17 = VAN WHEEL BASE 7 55 = WAGON WHEEL BASE 5 15 = VAN WHEEL BASE 5 53 = 119 WB 13 = 119 WB 05 = CAB CHASSIS WHEEL BASE 5 03 = CAB CHASSIS WHEEL BASE 3	EG2 = 3.5L V6 Gas Engine EXM = 3.0L V6 Turbo Diesel Engine	DGZ = 5-Speed Auto W5A380 Transmission

Wheels and Hardware
Figure 22-201

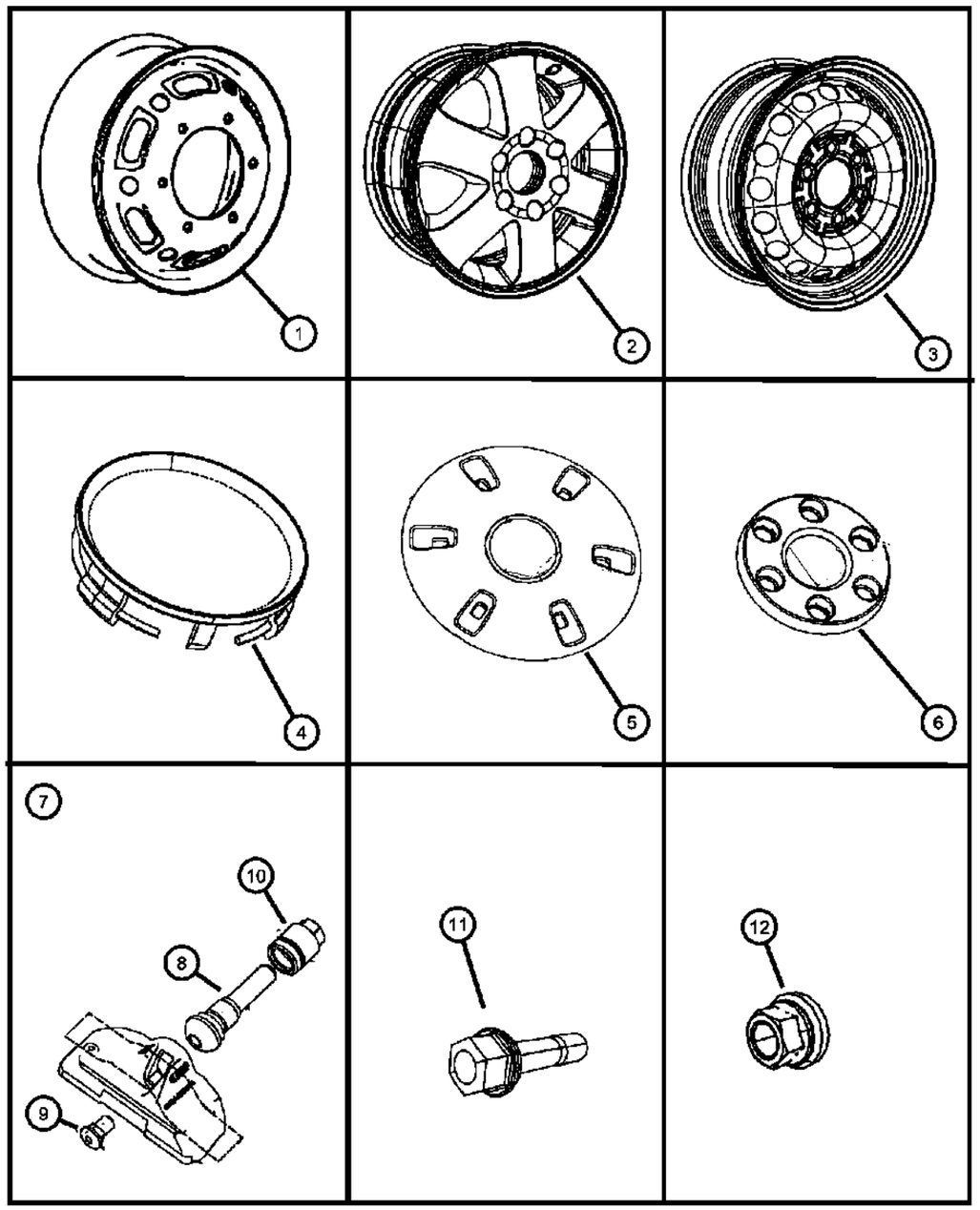

ITEM	PART NUMBER	QTY	LINE	SERIES	BODY	ENGINE	TRANS	TRIM	DESCRIPTION
1									WHEEL, Steel
	1JJ25DX9AA	6	3, 7	L					Black Steel Wheel / With [WWA + WDK] Without [WWW]
	1JJ25P01AA	6	3, 7	L					White Steel Wheel / With [WWW + WDK] Without [WWA]
	1JJ25SZ0AA	6	3, 7	L					Silver Steel Wheel / With [WDK] Without [-WWA-WWW]
2	68004980AA	4	2, 6	L	13, 15, 17, 53, 55				WHEEL, Aluminum, With [WNB]
3									WHEEL, Steel
	1VB07DX9AA	4	2, 6	L					Black Steel Wheel / With [WWA + WDG]
	1VB07P01AA	4	2, 6	L					White Steel Wheel / With [WWW + WDG]]
	1VB07SZ0AA	4	2, 6	L					Silver Steel Wheel / With [WDG] Without [WWA & WWW]
4	05104570AA	4	2, 6	L	13, 15, 17, 53, 55				CAP, Wheel Center, With [WNB]
5	68025431AA	4	2, 6	L	13, 15, 17, 53, 55				CAP, Wheel Center, With [WDG]
6	68025430AA	2	3, 7	L	03, 05, 13, 15, 17				CAP, Wheel Center, With [WDK]
7	68006771AA	4	2, 6	L					SENSOR, Tire Pressure, Valve stem, With [LAB]
8									STEM, Wheel Valve
	05175255AA	1	2, 3, 6, 7	L					With [WLB]
	68004983AA	2	3, 7	L					Without [LAB]
	68006772AA	99	3, 7	L					Standard Valve
	68006773AA	4	2, 6	L					With [LAB]
9	68006774AA	4	2, 6	L					NUT, Tire Pressure Sensor, With [LAB]
10	68006775AA	4	2, 6	L					CAP, Valve stem, With [LAB]
11	68006805AA	24	2, 6	L					BOLT, Mounting Wheel Stud / With [WDG]
12	68013445AA	24	3, 7	L	03, 05, 13, 15, 17				NUT, With [WDK]
-13									LABEL, Tire Pressure
	68013454AA	1	2, 3, 6, 7	L					Without [LAB]
	68022059AA	4	2, 3, 6, 7	L					With [LAB]

SPRINTER (VB)

SERIES	LINE	BODY	ENGINE	TRANSMISSION
L = LOWLINE	3 = HD DODGE 2WD 6 = Lt. Duty DODGE 4WD 2 = Med. Duty DODGE 2WD 7 = Med. Duty DODGE 4WD	17 = VAN WHEEL BASE 7 55 = WAGON WHEEL BASE 5 15 = VAN WHEEL BASE 5 53 = 119 WB 13 = 119 WB 05 = CAB CHASSIS WHEEL BASE 5 03 = CAB CHASSIS WHEEL BASE 3	EG2 = 3.5L V6 Gas Engine EXM = 3.0L V6 Turbo Diesel Engine	DGZ = 5-Speed Auto W5A380 Transmission

Jack Assembly
Figure 22-305

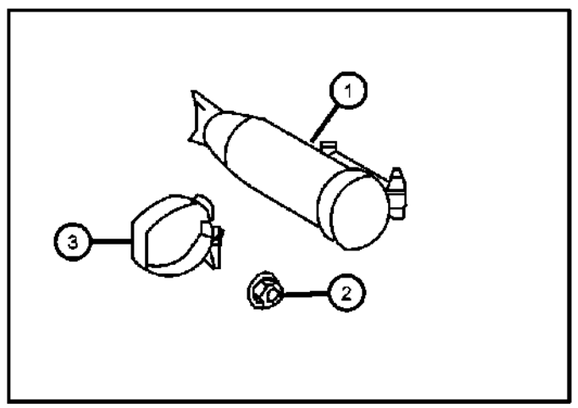

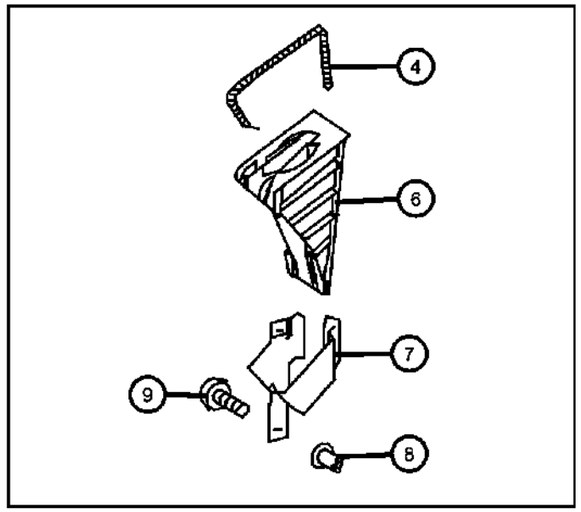

ITEM	PART NUMBER	QTY	LINE	SERIES	BODY	ENGINE	TRANS	TRIM	DESCRIPTION
1	68007087AA	1	2, 3, 6, 7	L					JACK
2									NUT, Hex
	05097674AA	2	3, 7	L	03, 05				Fasten Vehicle Jack M6
		2	2, 3, 6, 7	L	13, 15, 17, 53, 55				Fasten Vehicle Jack M6
3									BRACKET, Jack
	05125276AA	1	2, 3, 6, 7	L	13, 15, 17, 53, 55				
		1	3, 7	L	03, 05				
4	68007093AA	1	2, 3, 6, 7	L					RETAINER
-5	68007100AA	1	3, 7	L	03, 05				BRACKET
6	68007091AA	1	2, 3, 6, 7	L	03, 05, 13, 15, 17				BUMPER, Wheel Chock
7	68007099AA	1	3, 7	L	03, 05				BRACKET
8	05133486AA	4	2, 3, 6, 7	L					RIVET
9									SCREW, Hex Flange Head
	06104121AA	4	2, 3, 6, 7	L	13, 15, 17, 53, 55				M6x16
		2	3, 7	L	03, 05				M6x16

SPRINTER (VB)

SERIES	LINE	BODY	ENGINE	TRANSMISSION
L = LOWLINE	3 = HD DODGE 2WD 6 = Lt. Duty DODGE 4WD 2 = Med. Duty DODGE 2WD 7 = Med. Duty DODGE 4WD	17 = VAN WHEEL BASE 7 55 = WAGON WHEEL BASE 5 15 = VAN WHEEL BASE 5 53 = 119 WB 13 = 119 WB 05 = CAB CHASSIS WHEEL BASE 5 03 = CAB CHASSIS WHEEL BASE 3	EG2 = 3.5L V6 Gas Engine EXM = 3.0L V6 Turbo Diesel Engine	DGZ = 5-Speed Auto W5A380 Transmission

Group - 23

Wiper/Washers-Miscellaneous

Illustration Title — Group-Fig. No.

Windshield Wiper and Washer System
Front Wiper System ..... Fig. 23 - 205
Front Washer System ..... Fig. 23 - 210
Front Headlamp Washer System ..... Fig. 23 - 215

Rear Window Wiper and Washer
Rear Wiper System ..... Fig. 23 - 305

023-200 Windshield Wiper and Washer System	**023-300** Rear Window Wiper and Washer		

Front Wiper System
Figure 23-205

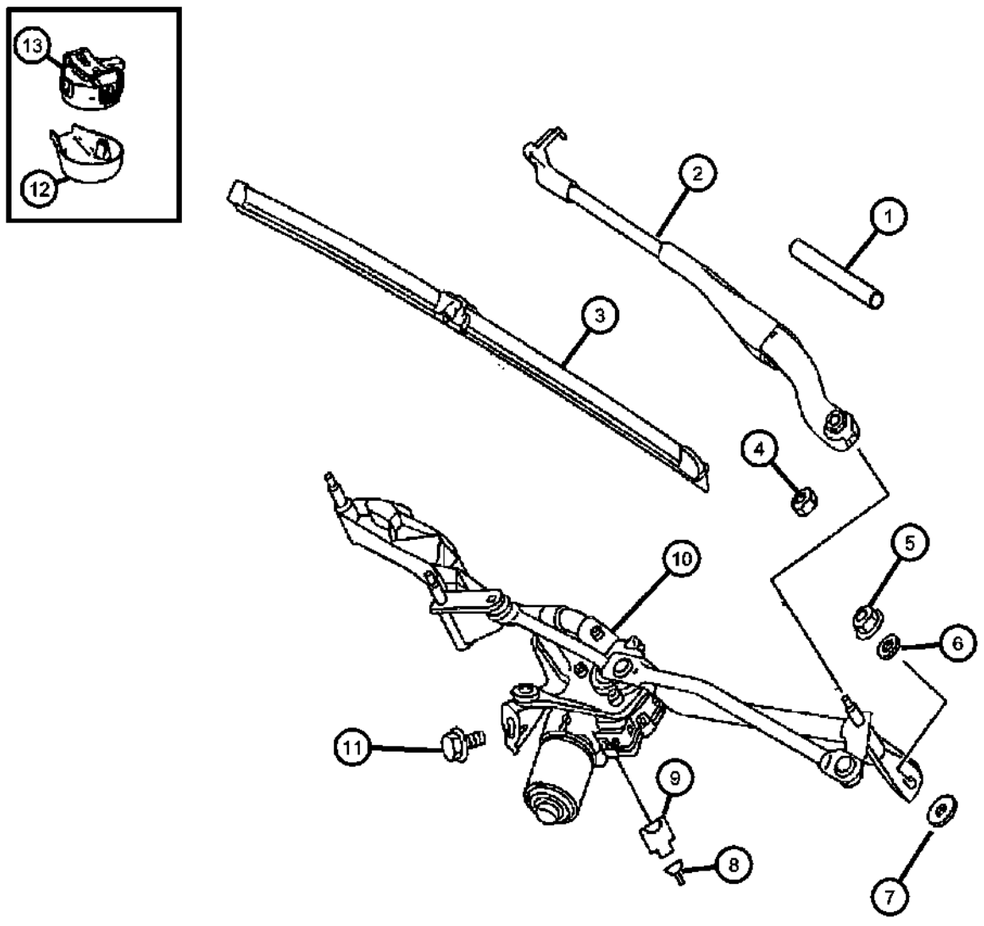

ITEM	PART NUMBER	QTY	LINE	SERIES	BODY	ENGINE	TRANS	TRIM	DESCRIPTION
1	68017463AA	117	2, 3, 6, 7	L					HOSE, Pane Washer System,Nozzles 4.3x1.9
2									WIPER
	68017436AA	1	3, 7	L	03, 05				Left
		1	2, 3, 6, 7	L	13, 15, 17, 53, 55				Left
	68017438AA	1	3, 7	L	03, 05				Right
		1	2, 3, 6, 7	L	13, 15, 17, 53, 55				Right
3									BLADE, Wiper
	68017439AA	1	3, 7	L	03, 05				Passenger
		1	2, 3, 6, 7	L	13, 15, 17, 53, 55				Passenger
	68017437AA	1	3, 7	L	03, 05				Driver
		1	2, 3, 6, 7	L	13, 15, 17, 53, 55				Driver
4									NUT, Hex Flange Lock, M10x1.50
	06104717AA	2	3, 7	L	03, 05				Wiper Arm on Spindle M10
		2	2, 3, 6, 7	L	13, 15, 17, 53, 55				Wiper Arm on Spindle M10
5	68017442AA	2	2, 3, 6, 7	L					NUT, Wiper System to Cowl M22x1
6	68017443AA	2	2, 3, 6, 7	L					WASHER, Wiper System to Cowl
7	68017444AA	2	2, 3, 6, 7	L					WASHER, Wiper System to Cowl
8	05133353AA	AR	2, 3, 6, 7	L					TERMINAL, 1.5-2.5 MM2;M6/1
9	05135758AA	1	2, 3, 6, 7	L					CONNECTOR, Female
10									LINKAGE ASSY, LINKAGE ASSY-W/WPR
	68017435AA	1	2, 3, 6, 7	L	13, 15, 17, 53, 55				
		1	3, 7	L	03, 05				
11									SCREW, Hex Head, M6x12
	06104120AA	1	3, 7	L	03, 05				Support to Bracket M6x12
		1	2, 3, 6, 7	L	13, 15, 17, 53, 55				Support to Bracket M6x12
12	68013425AA	1	2, 3, 6, 7	L					COVER, Sensor
13	68013389AA	1	2, 3, 6, 7	L					SENSOR, Rain, Rain and Light Sensor
-14									NOZZLE, Washer, Windshield

SPRINTER (VB)

SERIES	LINE	BODY	ENGINE	TRANSMISSION
L = LOWLINE	3 = HD DODGE 2WD 6 = Lt. Duty DODGE 4WD 2 = Med. Duty DODGE 2WD 7 = Med. Duty DODGE 4WD	17 = VAN WHEEL BASE 7 55 = WAGON WHEEL BASE 5 15 = VAN WHEEL BASE 5 53 = 119 WB 13 = 119 WB 05 = CAB CHASSIS WHEEL BASE 5 03 = CAB CHASSIS WHEEL BASE 3	EG2 = 3.5L V6 Gas Engine EXM = 3.0L V6 Turbo Diesel Engine	DGZ = 5-Speed Auto W5A380 Transmission

Front Wiper System
Figure 23-205

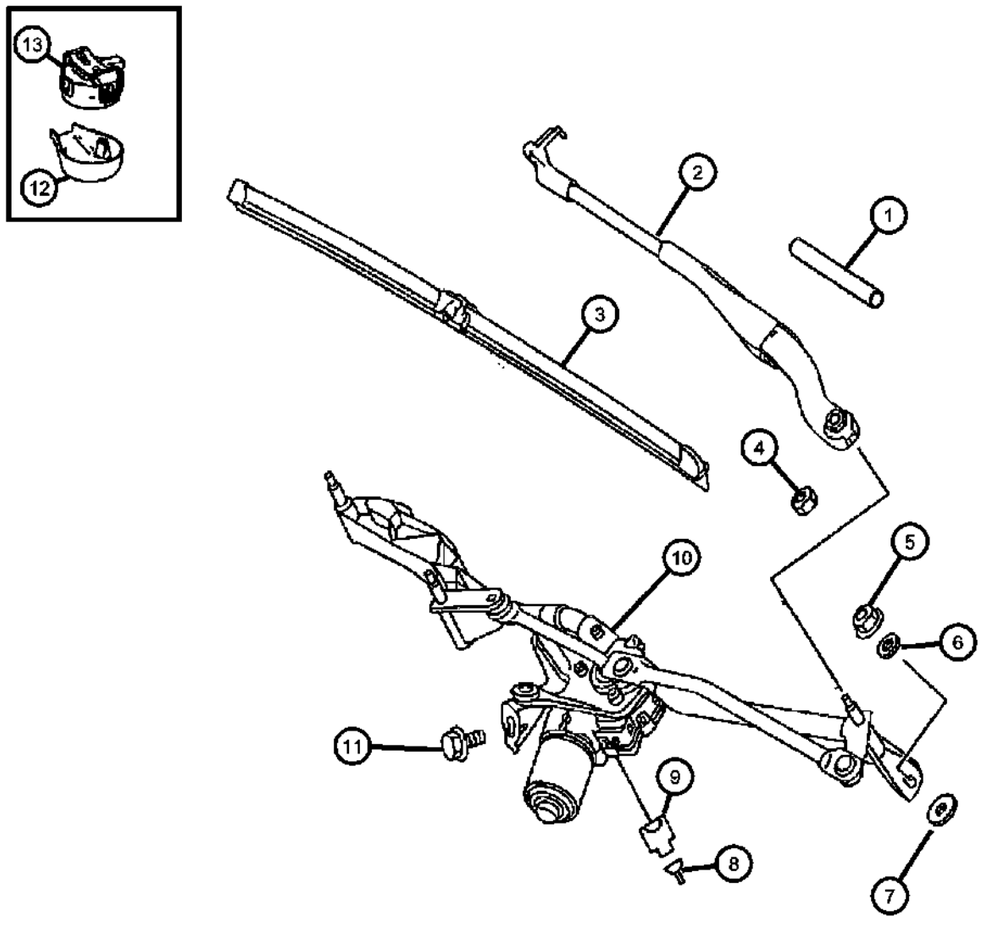

ITEM	PART NUMBER	QTY	LINE	SERIES	BODY	ENGINE	TRANS	TRIM	DESCRIPTION
	68017440AA	1	2, 3, 6, 7	L					Right
	68017441AA	1	2, 3, 6, 7	L					Left

SPRINTER (VB)

SERIES	LINE	BODY	ENGINE	TRANSMISSION
L = LOWLINE	3 = HD DODGE 2WD 6 = Lt. Duty DODGE 4WD 2 = Med. Duty DODGE 2WD 7 = Med. Duty DODGE 4WD	17 = VAN WHEEL BASE 7 55 = WAGON WHEEL BASE 5 15 = VAN WHEEL BASE 5 53 = 119 WB 13 = 119 WB 05 = CAB CHASSIS WHEEL BASE 5 03 = CAB CHASSIS WHEEL BASE 3	EG2 = 3.5L V6 Gas Engine EXM = 3.0L V6 Turbo Diesel Engine	DGZ = 5-Speed Auto W5A380 Transmission

Front Washer System
Figure 23-210

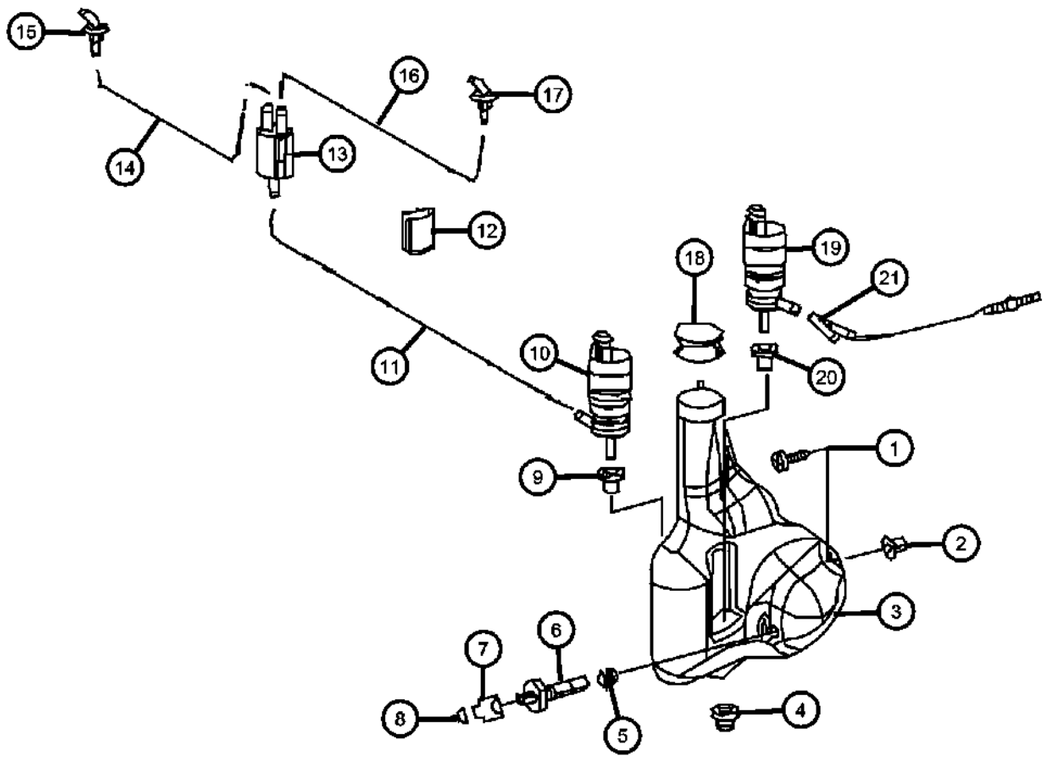

ITEM	PART NUMBER	QTY	LINE	SERIES	BODY	ENGINE	TRANS	TRIM	DESCRIPTION
1									SCREW
	06104582AA	2	3, 7	L	03, 05				
		2	2, 3, 6, 7	L	13, 15, 17, 53, 55				
2									PLUG, Push Lock
	05132725AA	2	3, 7	L	03, 05				
		2	2, 3, 6, 7	L	13, 15, 17, 53, 55				
3									RESERVOIR, Washer
	68017445AA	1	3, 7	L	03, 05				
		1	2, 3, 6, 7	L	13, 15, 17, 53, 55				
4	05120012AA	1	2, 3, 6, 7	L					GROMMET, Air Cleaner
5									GROMMET, Washer Reservoir
	05097659AA	1	3, 7	L	03, 05				
		1	2, 3, 6, 7	L	13, 15, 17, 53, 55				
6	05099273AA	1	2, 3, 6, 7	L					SENSOR, Washer Fluid Level
7	05120277AA	1	2, 3, 6, 7	L					CONNECTOR, Wiring Repair
8	05103874AA	1	2, 3, 6, 7	L					TERMINAL
9									GROMMET, Windshield Washer Pump
	05135548AA	1	3, 7	L	03, 05				
		1	2, 3, 6, 7	L	13, 15, 17, 53, 55				
10	68017447AA	1	2, 3, 6, 7	L					PUMP, Washer, Windshield
11									HOSE, Windshield Washer
	05127702AA	900	2, 3, 6, 7	L	13, 15, 17, 53, 55				
		900	3, 7	L	03, 05				
12		900							CLIP, (NOT SERVICED)
13									CHECK VALVE, Washer
	05124963AA	1	3, 7	L	03, 05				
		1	2, 3, 6, 7	L	13, 15, 17, 53, 55				
14									HOSE, Windshield Washer
	05127702AA	900	3, 7	L	03, 05				

SPRINTER (VB)

SERIES	LINE	BODY	ENGINE	TRANSMISSION
L = LOWLINE	3 = HD DODGE 2WD 6 = Lt. Duty DODGE 4WD 2 = Med. Duty DODGE 2WD 7 = Med. Duty DODGE 4WD	17 = VAN WHEEL BASE 7 55 = WAGON WHEEL BASE 5 15 = VAN WHEEL BASE 5 53 = 119 WB 13 = 119 WB 05 = CAB CHASSIS WHEEL BASE 5 03 = CAB CHASSIS WHEEL BASE 3	EG2 = 3.5L V6 Gas Engine EXM = 3.0L V6 Turbo Diesel Engine	DGZ = 5-Speed Auto W5A380 Transmission

Front Washer System
Figure 23-210

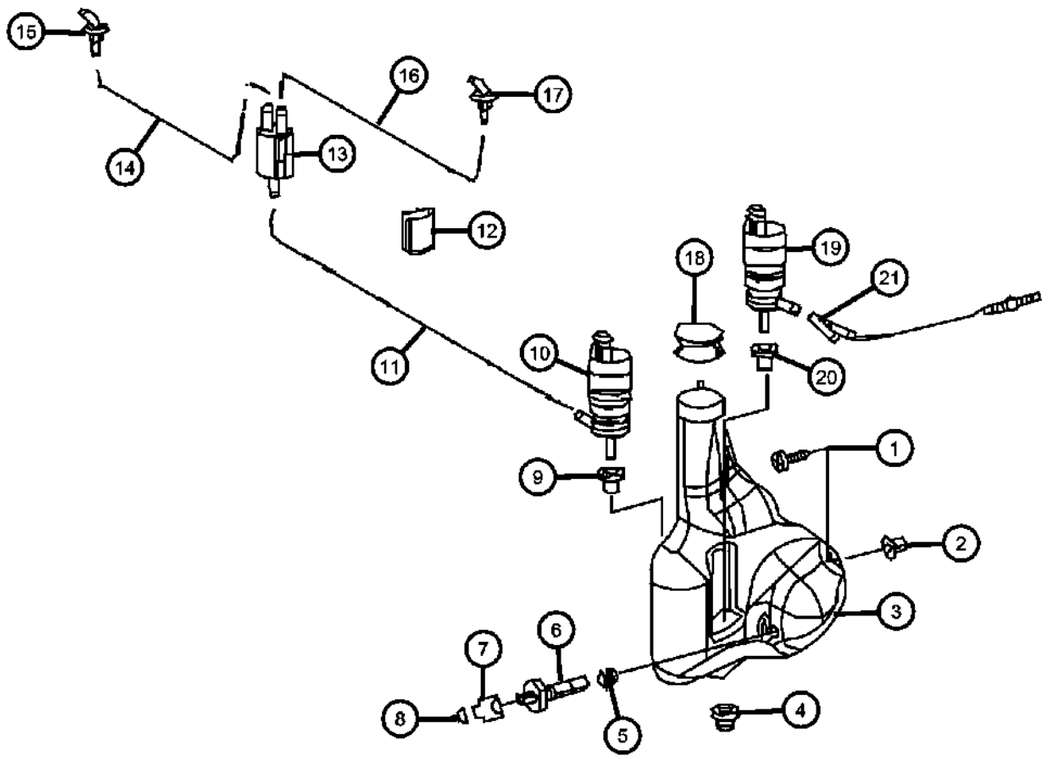

ITEM	PART NUMBER	QTY	LINE	SERIES	BODY	ENGINE	TRANS	TRIM	DESCRIPTION
		900	2, 3, 6, 7	L	13, 15, 17, 53, 55				
15									CONNECTOR, Washer Hose, Elbow Type
	05125061AA	2	2, 3, 6, 7	L	13, 15, 17, 53, 55				
		2	3, 7	L	03, 05				
16									HOSE, Windshield Washer
	05127702AA	900	3, 7	L	03, 05				
		900	2, 3, 6, 7	L	13, 15, 17, 53, 55				
17									CONNECTOR, Washer Hose, Elbow Type
	05125061AA	2	3, 7	L	03, 05				
		2	2, 3, 6, 7	L	13, 15, 17, 53, 55				
18	68017446AA	1	2, 3, 6, 7	L					CAP, Washer Reservoir
19	68017447AA	1	2, 3, 6, 7	L					PUMP, Washer, Windshield
20									GROMMET, Windshield Washer Pump
	05135548AA	1	3, 7	L	03, 05				
		1	2, 3, 6, 7	L	13, 15, 17, 53, 55				
21	68017477AA	1	2, 3, 6, 7	L	13, 15, 17, 53, 55				FITTING

SPRINTER (VB)

SERIES	LINE	BODY	ENGINE	TRANSMISSION
L = LOWLINE	3 = HD DODGE 2WD 6 = Lt. Duty DODGE 4WD 2 = Med. Duty DODGE 2WD 7 = Med. Duty DODGE 4WD	17 = VAN WHEEL BASE 7 55 = WAGON WHEEL BASE 5 15 = VAN WHEEL BASE 5 53 = 119 WB 13 = 119 WB 05 = CAB CHASSIS WHEEL BASE 5 03 = CAB CHASSIS WHEEL BASE 3	EG2 = 3.5L V6 Gas Engine EXM = 3.0L V6 Turbo Diesel Engine	DGZ = 5-Speed Auto W5A380 Transmission

Front Headlamp Washer System
Figure 23-215

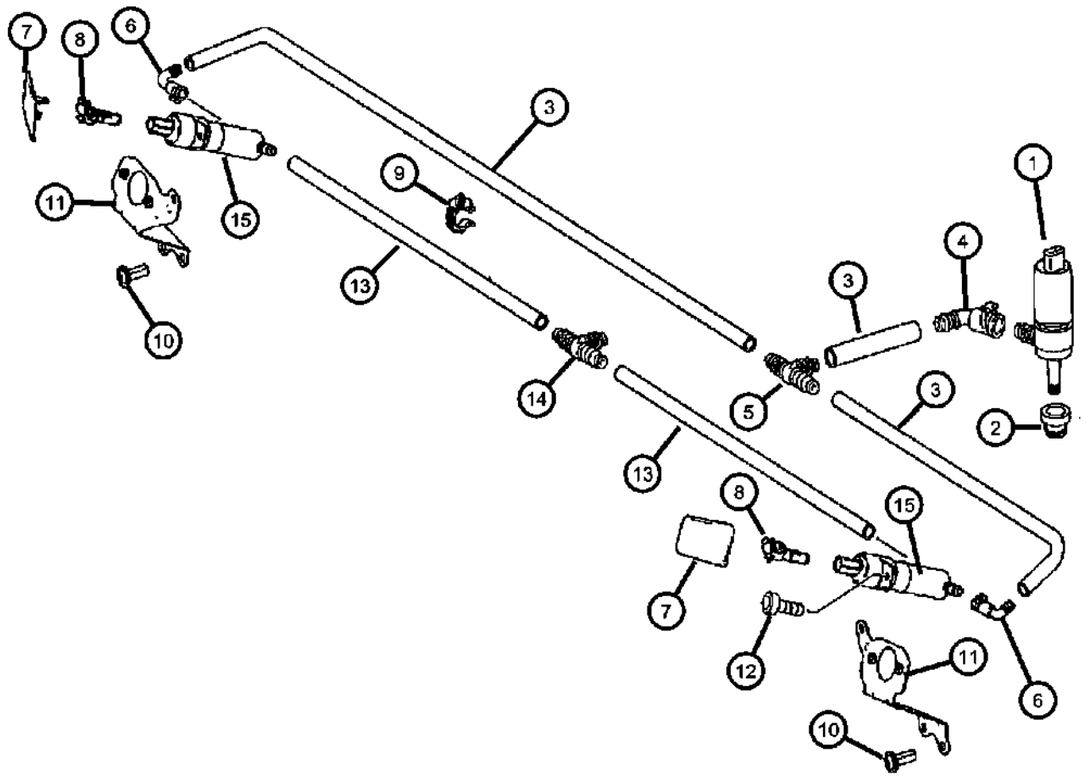

ITEM	PART NUMBER	QTY	LINE	SERIES	BODY	ENGINE	TRANS	TRIM	DESCRIPTION
1	68017448AA	1	2, 3, 6, 7	L					PUMP, Washer, Windshield, With [JHT]
2	68017449AA	1	2, 3, 6, 7	L					GROMMET, With [JHT]
3	68017467AA	900	2, 3, 6, 7	L					HOSE, Washer, Headlamp, With [JHT]
4	68017470AA	1	2, 3, 6, 7	L					FITTING, With [JHT]
5	68017468AA	1	2, 3, 6, 7	L					FITTING, [T] Fitting / With [JHT]
6	68017469AA	2	2, 3, 6, 7	L					FITTINGRight & Left, Elbow Attaching
7									COVER
	68017472AA	1	2, 3, 6, 7	L					With [JHT], Left
	68017473AA	1	2, 3, 6, 7	L					With [JHT], Right
8									NOZZLE, Washer, Headlamp
	68017464AA	1	2, 3, 6, 7	L					With [JHT], Right
	68017465AA	1	2, 3, 6, 7	L					With [JHT], Left
9	68017471AA	5	2, 3, 6, 7	L					RETAINER, With [JHT]
10	06104643AA	6	2, 3, 6, 7	L					SCREW, With [JHT] / Bracket Mounting
11									BRACKET
	68017475AA	1	2, 3, 6, 7	L					With [JHT], Left
	68017476AA	1	2, 3, 6, 7	L					With [JHT], Right
12									SCREW, Hex Head, M6x12
	06104120AA	4	3, 7	L	03, 05				
		4	2, 3, 6, 7	L	13, 15, 17, 53, 55				
13	05133997AA	1	2, 3, 6, 7	L					HOSE, Washer, Headlamp, [10x16 MM] With [JHT]
14									CONNECTOR, Washer Hose, T
	05125060AA	1	3, 7	L	03, 05				With [JHT]
		1	2, 3, 6, 7	L	13, 15, 17, 53, 55				With [JHT]
15	68017474AA	2	2, 3, 6, 7	L					NOZZLE, Washer, Headlamp, TELESCOPIC NOZZLE

SPRINTER (VB)

SERIES	LINE	BODY	ENGINE	TRANSMISSION
L = LOWLINE	3 = HD DODGE 2WD 6 = Lt. Duty DODGE 4WD 2 = Med. Duty DODGE 2WD 7 = Med. Duty DODGE 4WD	17 = VAN WHEEL BASE 7 55 = WAGON WHEEL BASE 5 15 = VAN WHEEL BASE 5 53 = 119 WB 13 = 119 WB 05 = CAB CHASSIS WHEEL BASE 5 03 = CAB CHASSIS WHEEL BASE 3	EG2 = 3.5L V6 Gas Engine EXM = 3.0L V6 Turbo Diesel Engine	DGZ = 5-Speed Auto W5A380 Transmission

Rear Wiper System
Figure 23-305

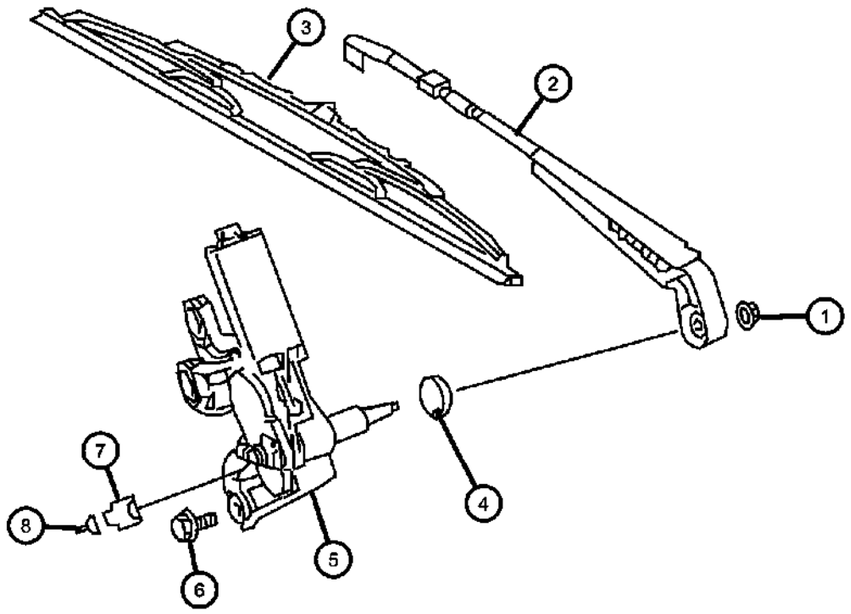

ITEM	PART NUMBER	QTY	LINE	SERIES	BODY	ENGINE	TRANS	TRIM	DESCRIPTION
1	05126206AA	1	2, 3, 6, 7	L	13, 15, 17, 53, 55				NUT, Wiper Arm Fastening M8-8
2									ARM, Wiper
	68006512AA	1	2, 3, 6, 7	L	13, 15, 17, 53, 55				Right Door
	68006513AA	1	2, 3, 6, 7	L	13, 15, 17, 53, 55				Left Door
3	68006511AA	2	2, 3, 6, 7	L	13, 15, 17, 53, 55				BLADE, Wiper
4	68006509AA	2	2, 3, 6, 7	L					CAP
5									MOTOR
	68006508AA	1	2, 3, 6, 7	L					Left Door
	68006603AA	1	2, 3, 6, 7	L					Right Door
6	06104123AA	2	2, 3, 6, 7	L	13, 15, 17, 53, 55				SCREW
7	68011274AA	2	2, 3, 6, 7	L					CONNECTOR, [3 PiN M6/10 - M6/11]
8	05103892AA	1	2, 3, 6, 7	L					TERMINAL

SPRINTER (VB)

SERIES	LINE	BODY	ENGINE	TRANSMISSION
L = LOWLINE	3 = HD DODGE 2WD 6 = Lt. Duty DODGE 4WD 2 = Med. Duty DODGE 2WD 7 = Med. Duty DODGE 4WD	17 = VAN WHEEL BASE 7 55 = WAGON WHEEL BASE 5 15 = VAN WHEEL BASE 5 53 = 119 WB 13 = 119 WB 05 = CAB CHASSIS WHEEL BASE 5 03 = CAB CHASSIS WHEEL BASE 3	EG2 = 3.5L V6 Gas Engine EXM = 3.0L V6 Turbo Diesel Engine	DGZ = 5-Speed Auto W5A380 Transmission

Group - 24

Air Conditioners and Heaters

024-100 Air Conditioner and Heater Units	**024-200** Air Conditioner and Heater Plumbing	**024-300** Air Conditioner and Heater Controls	**024-400** Air Conditioner Compressor and Mounting
024-500 Air Ducts and Outlets			

Group - 24 Air Conditioners and Heaters

Illustration Title — Group-Fig. No.

Air Conditioner and Heater Units

Heater And Evaporator Housing ..... Fig. 24 - 104
Heater Housing/AC with Blower ..... Fig. 24 - 105
Heat Exchange ..... Fig. 24 - 106
Ventilation Case ..... Fig. 24 - 107
Condenser And Auxilary Fan ..... Fig. 24 - 108
Roof Mounted Ventilator ..... Fig. 24 - 109
Roof Air Conditioner Unit ..... Fig. 24 - 170
Roof Air Conditioner Unit ..... Fig. 24 - 171
Roof Air Conditioner Unit ..... Fig. 24 - 173

Air Conditioner and Heater Plumbing

Rear A/C Condensed Water Drain ..... Fig. 24 - 205
Auxiliary Warm Water Heater Mounting ..... Fig. 24 - 210
Auxiliary Warm Water Heater Mounting ..... Fig. 24 - 215
Auxiliary Warm Water Heater Service Parts ..... Fig. 24 - 220
Heater Lines ..... Fig. 24 - 225
Heater Lines ..... Fig. 24 - 230
Refrigerant Lines ..... Fig. 24 - 235
Refrigerant Lines ..... Fig. 24 - 240
Refrigerant Line Routing ..... Fig. 24 - 245
Refrigerant Lines ..... Fig. 24 - 250

Air Conditioner and Heater Controls

Heater Controls ..... Fig. 24 - 305
A/C and Heater Controls ..... Fig. 24 - 310

Air Conditioner Compressor and Mounting

A/C Compressor ..... Fig. 24 - 405

Air Ducts and Outlets

Air Ducting ..... Fig. 24 - 505
Air Duct to Roof ..... Fig. 24 - 511

Heater And Evaporator Housing
Figure 24-104

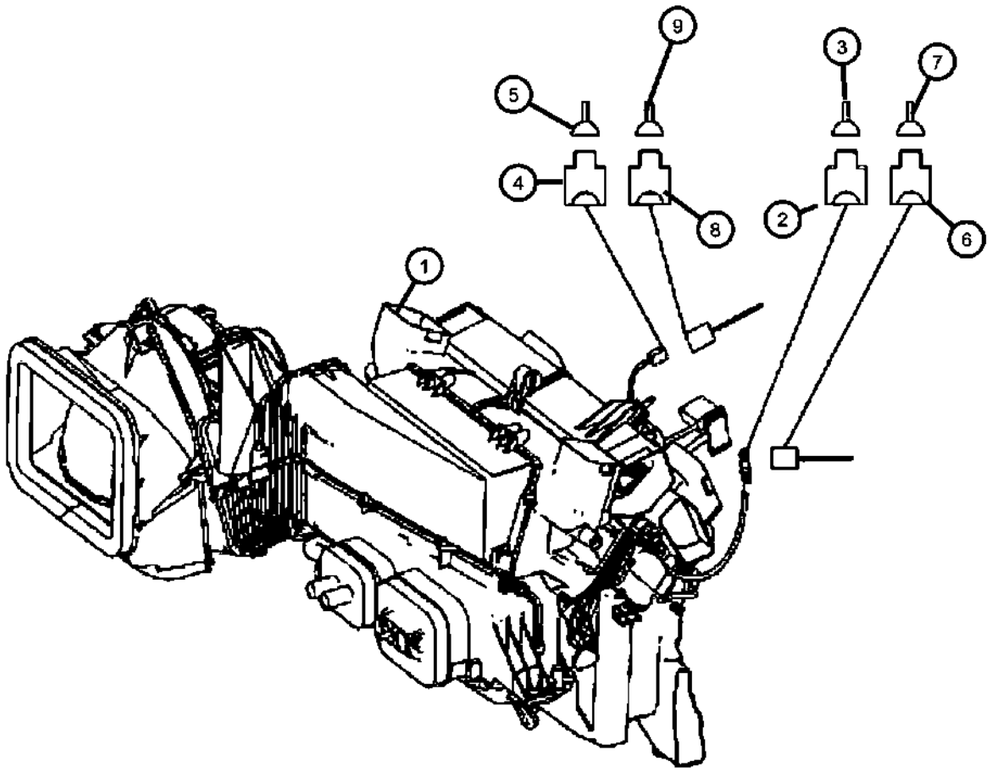

ITEM	PART NUMBER	QTY	LINE	SERIES	BODY	ENGINE	TRANS	TRIM	DESCRIPTION
Note:Housing Includes All Internal Parts									
1	68012663AA	1	2, 3, 6, 7			EG2, EXM			HOUSING, See Note:, Complete Heater/Evaporator Housing
2	05120685AA	1	2, 3, 6, 7			EG2, EXM			INSULATOR, Blower Stage [1] Plug Connector [1 Pin X31/ 10]
3	05133358AA	1	2, 3, 6, 7			EG2, EXM			TERMINAL, Male, [4 - 6 MM2; X31/10]
4	68011379AA	1	2, 3, 6, 7			EG2, EXM			CONNECTOR, Blower Terminal Connector [31] [1 Pin; X31/12]
5	05133379AA	AR	2, 3, 6, 7			EG2, EXM			TERMINAL, Male, [6.0 MM2; X31/9 & X31/12]
6									CONNECTOR
	05120684AA	2	2, 3, 6, 7		13, 15, 17, 53, 55	EG2, EXM			Blower Stage [1] Connector [1 Pin X31/10]
		2	3, 7		03, 05	EG2, EXM			Blower Stage [1] Connector [1 Pin X31/10]
7	68016729AA	AR	2, 3, 6, 7			EG2, EXM			TERMINAL, [0.5 - 1.0 MM2; X31/10]
8	05143907AA	2	2, 3, 6, 7			EG2, EXM			CONNECTOR, Blower Terminal Connector [31] [1 Pin X31/12]
9	05120606AB	AR	2, 3, 6, 7			EG2, EXM			TERMINAL, [4.0 MM2; X31/12]

SPRINTER (VB)

SERIES	LINE	BODY	ENGINE	TRANSMISSION
L = LOWLINE	3 = HD DODGE 2WD 6 = Lt. Duty DODGE 4WD 2 = Med. Duty DODGE 2WD 7 = Med. Duty DODGE 4WD	17 = VAN WHEEL BASE 7 55 = WAGON WHEEL BASE 5 15 = VAN WHEEL BASE 5 53 = 119 WB 13 = 119 WB 05 = CAB CHASSIS WHEEL BASE 5 03 = CAB CHASSIS WHEEL BASE 3	EG2 = 3.5L V6 Gas Engine EXM = 3.0L V6 Turbo Diesel Engine	DGZ = 5-Speed Auto W5A380 Transmission

AR = use ase required - = Non illustrrated part

<< RETURN TO GROUP INDEX

Heater Housing/AC with Blower
Figure 24-105

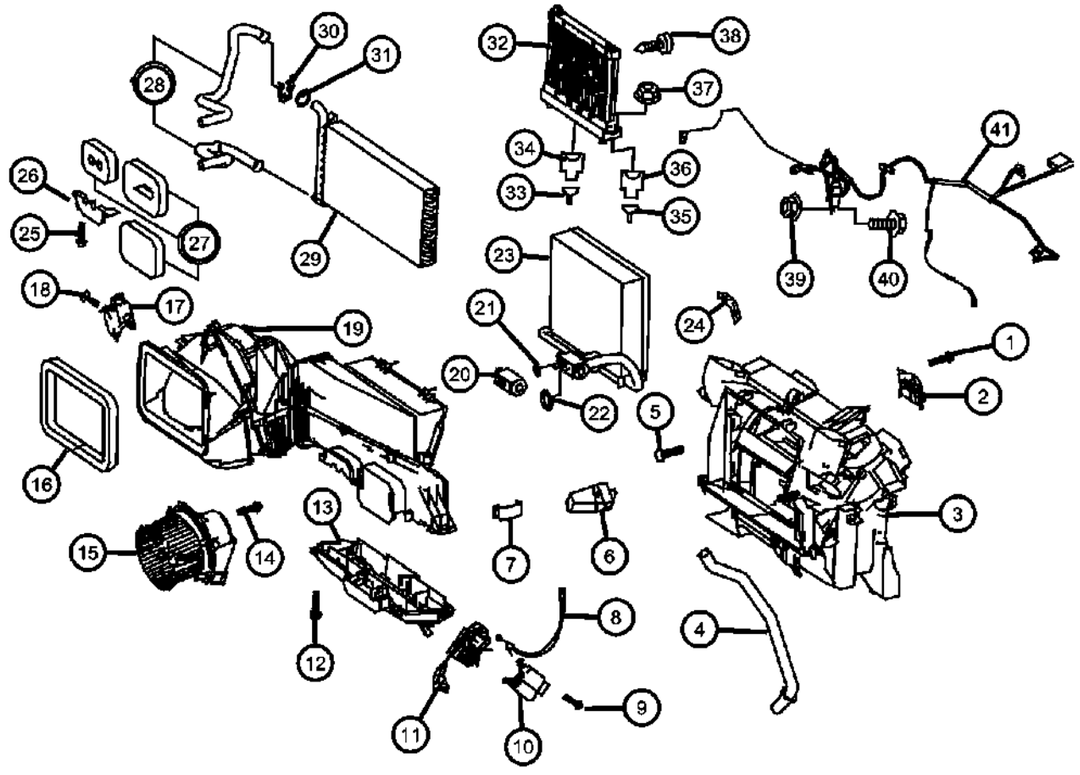

ITEM	PART NUMBER	QTY	LINE	SERIES	BODY	ENGINE	TRANS	TRIM	DESCRIPTION
1	68012630AA	2	2, 3, 6, 7			EG2, EXM			SCREW, 4x18
2	68012668AA	1	2, 3, 6, 7			EG2, EXM			ACTUATOR, A/C and Heater
3	68012673AA	1	2, 3, 6, 7			EG2, EXM			HOUSING, A/C And Heater
4	68012666AA	1	2, 3, 6, 7			EG2, EXM			HOSE, Drain
5	68012630AA	2	2, 3, 6, 7			EG2, EXM			SCREW, At Heater Case 4x18
6	68012613AA	1	2, 3, 6, 7			EG2, EXM			RESISTOR, Blower Motor
7	05133592AA	21	2, 3, 6, 7		13, 15, 17, 53, 55	EG2, EXM			CLIP, HEATER
8	68012667AA	1	2, 3, 6, 7			EG2, EXM			CABLE, A/C And Heater Control
9	68012630AA	2	2, 3, 6, 7			EG2, EXM			SCREW, Engine Fixing 4x16
10	68012669AA	1	2, 3, 6, 7			EG2, EXM			ACTUATOR, A/C and Heater
11	68012671AA	1	2, 3, 6, 7			EG2, EXM			LEVER, Panel Door
12	68012630AA	6	2, 3, 6, 7		13, 15, 17, 53, 55	EG2, EXM			SCREW, Mounting Shell 4x16
13	68012674AA	1	2, 3, 6, 7			EG2, EXM			COVER, Module
14	68012630AA	1	2, 3, 6, 7		13, 15, 17, 53, 55	EG2, EXM			SCREW, Fan Fastening 4x16
15	68012680AA	1	2, 3, 6, 7			EG2, EXM			MOTOR, Blower with Wheel
16	68012687AA	1	2, 3, 6, 7			EG2, EXM			GASKET
17	68012678AA	1	2, 3, 6, 7			EG2, EXM			ACTUATOR
18	68012630AA	2	2, 3, 6, 7			EG2, EXM			SCREW, Engine Fixing 4x16
19	68012676AA	1	2, 3, 6, 7			EG2, EXM			HOUSING, Heater
20	68012686AA	1	2, 3, 6, 7			EG2, EXM			VALVE, Expansion
21	05103930AA	1	2, 3, 6, 7		13, 15, 17, 53, 55	EG2, EXM			O RING, A/C Line, 17x2MM
22									O RING, A/C Line
	05098971AA	1	2, 3, 6, 7		13, 15, 17, 53, 55	EG2, EXM			10.6x2MM
		1	3, 7		03, 05	EG2, EXM			10.6x2MM
23	68012685AA	1	2, 3, 6, 7			EG2, EXM			EVAPORATOR, Air Conditioning
24									SENSOR, Temperature
	05103937AB	1	2, 3, 6, 7		13, 15, 17, 53, 55	EG2, EXM			
		1	3, 7		03, 05	EG2, EXM			
25	68012630AA	2	2, 3, 6, 7		13, 15, 17, 53, 55	EG2, EXM			SCREW, Bracket Mounting 4x16

SPRINTER (VB)

SERIES	LINE	BODY	ENGINE	TRANSMISSION
L = LOWLINE	3 = HD DODGE 2WD 6 = Lt. Duty DODGE 4WD 2 = Med. Duty DODGE 2WD 7 = Med. Duty DODGE 4WD	17 = VAN WHEEL BASE 7 55 = WAGON WHEEL BASE 5 15 = VAN WHEEL BASE 5 53 = 119 WB 13 = 119 WB 05 = CAB CHASSIS WHEEL BASE 5 03 = CAB CHASSIS WHEEL BASE 3	EG2 = 3.5L V6 Gas Engine EXM = 3.0L V6 Turbo Diesel Engine	DGZ = 5-Speed Auto W5A380 Transmission

Heater Housing/AC with Blower
Figure 24-105

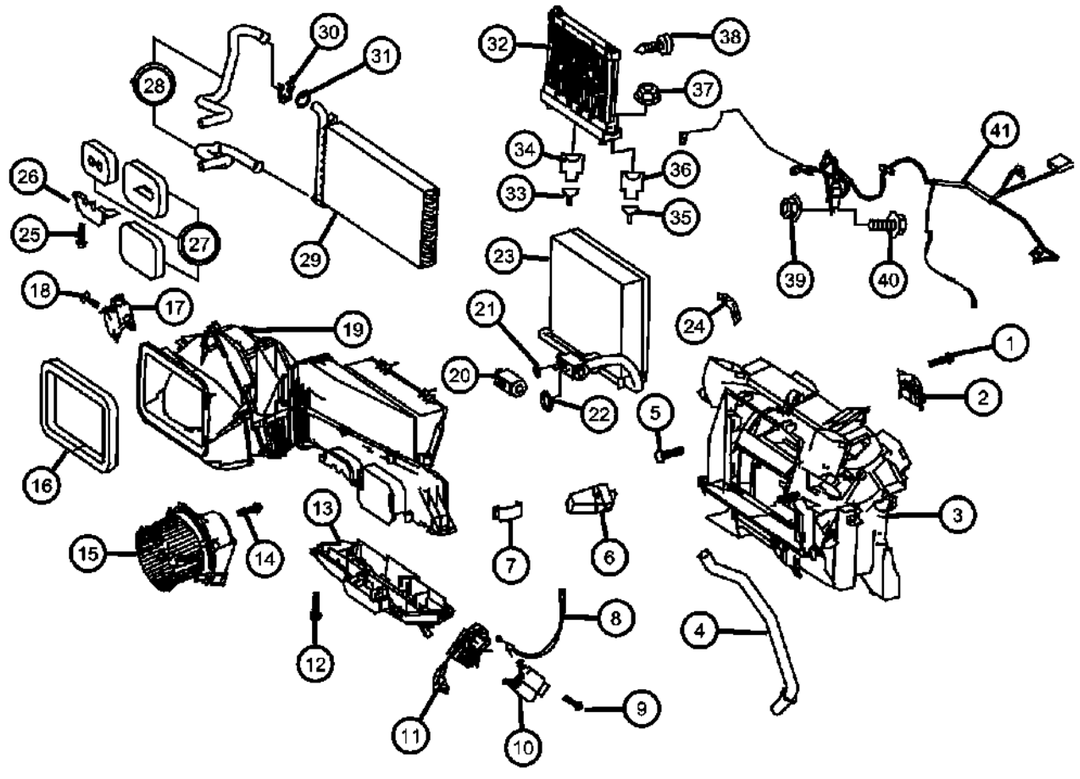

ITEM	PART NUMBER	QTY	LINE	SERIES	BODY	ENGINE	TRANS	TRIM	DESCRIPTION
26	68012684AA	1	2, 3, 6, 7			EG2, EXM			BRACKET
27	68012677AA	1	2, 3, 6, 7			EG2, EXM			SEAL, Heater Core
28	68012683AA	1	2, 3, 6, 7			EG2, EXM			HOSE, Heater
29	68012682AA	1	2, 3, 6, 7			EG2, EXM			CORE, Heater
30	68012619AA	2	2, 3, 6, 7			EG2, EXM			CLIP, Pipe Line to Heater Case
31	68012624AA	2	2, 3, 6, 7			EG2, EXM			O RING, Heating Pipe Lines
32	68012665AA	1	2, 3, 6, 7			EG2, EXM			HEATER
33	05103874AA	1	2, 3, 6, 7			EG2, EXM			TERMINAL
34	68011286AA	1	2, 3, 6, 7			EG2, EXM			CONNECTOR
35	05103874AA	1	2, 3, 6, 7			EG2, EXM			TERMINAL
36	05120277AA	1	2, 3, 6, 7			EG2, EXM			CONNECTOR, Wiring Repair
37	06105169AA	2	2, 3, 6, 7			EG2, EXM			NUT
38	68012630AA	2	2, 3, 6, 7		13, 15, 17, 53, 55	EG2, EXM			SCREW, Control Unit Fixture 4x16
39	68004878AA	3	2, 3, 6, 7		13, 15, 17, 53, 55	EG2, EXM			NUT, Attachment for Heater M6
40									SCREW, Hex Flange Head, M6x1.00x20.00
	05133476AB	2	2, 3, 6, 7		13, 15, 17, 53, 55	EG2, EXM			Attachment for Heater M6x20
		2	3, 7		03, 05	EG2, EXM			Attachment for Heater M6x20
41	68012689AA	1	2, 3, 6, 7			EG2, EXM			WIRING, A/C and HEATER

SPRINTER (VB)

SERIES	LINE	BODY	ENGINE	TRANSMISSION
L = LOWLINE	3 = HD DODGE 2WD 6 = Lt. Duty DODGE 4WD 2 = Med. Duty DODGE 2WD 7 = Med. Duty DODGE 4WD	17 = VAN WHEEL BASE 7 55 = WAGON WHEEL BASE 5 15 = VAN WHEEL BASE 5 53 = 119 WB 13 = 119 WB 05 = CAB CHASSIS WHEEL BASE 5 03 = CAB CHASSIS WHEEL BASE 3	EG2 = 3.5L V6 Gas Engine EXM = 3.0L V6 Turbo Diesel Engine	DGZ = 5-Speed Auto W5A380 Transmission

AR = use ase required - = Non illustrrated part

<< RETURN TO GROUP INDEX

Heat Exchange
Figure 24-106

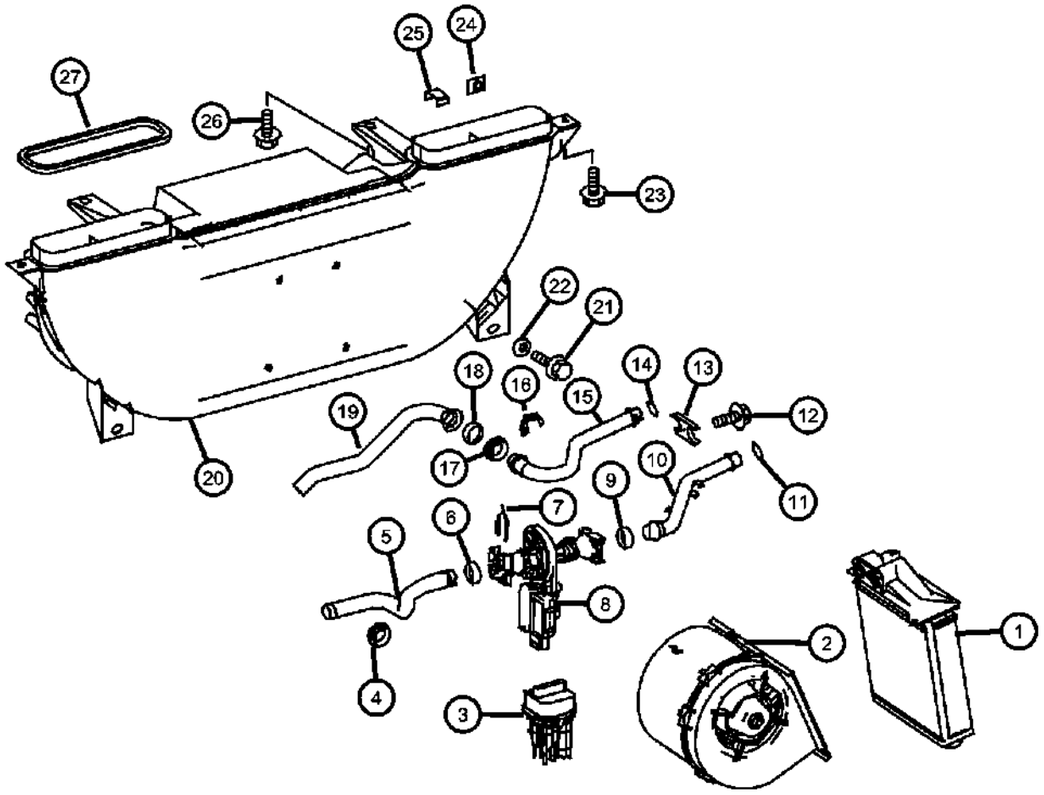

ITEM	PART NUMBER	QTY	LINE	SERIES	BODY	ENGINE	TRANS	TRIM	DESCRIPTION
1	68012614AA	1	2, 3, 6, 7		13, 15, 17, 53, 55	EG2, EXM			CORE, Heater
2	05103806AA	1	2, 3, 6, 7		13, 15, 17, 53, 55	EG2, EXM			BLOWER
3	68012613AA	1	2, 3, 6, 7			EG2, EXM			RESISTOR, Blower Motor
4	05133588AA	2	2, 3, 6, 7		13, 15, 17, 53, 55	EG2, EXM			GROMMET
5	68012618AA	1	2, 3, 6, 7		13, 15, 17, 53, 55	EG2, EXM			HOSE, Heater, Return from Valve
6	68012624AA	1	2, 3, 6, 7		13, 15, 17, 53, 55	EG2, EXM			O RING, At Control Valve
7	05098481AA	2	2, 3, 6, 7		13, 15, 17, 53, 55	EG2, EXM			RETAINER, Spring
8	68012622AA	1	2, 3, 6, 7		13, 15, 17, 53, 55	EG2, EXM			VALVE, Regulating Valve
9	68012624AA	2	2, 3, 6, 7			EG2, EXM			O RING, At Control Valve
10	68012617AA	1	2, 3, 6, 7		13, 15, 17, 53, 55	EG2, EXM			HOSE, Heater, Return from Heat Exchanger
11	68012623AA	2	2, 3, 6, 7		13, 15, 17, 53, 55	EG2, EXM			O RING, Heater
12	68012621AA	1	2, 3, 6, 7		13, 15, 17, 53, 55	EG2, EXM			SCREW
13	68012620AA	1	2, 3, 6, 7		13, 15, 17, 53, 55	EG2, EXM			BRACKET
14	68012623AA	2	2, 3, 6, 7		13, 15, 17, 53, 55	EG2, EXM			O RING
15	68012616AA	1	2, 3, 6, 7		13, 15, 17, 53, 55	EG2, EXM			HOSE, Heater, Partition Point to Heater
16	68012619AA	1	2, 3, 6, 7		13, 15, 17, 53, 55	EXM, EG2			CLIP, Pipe Lines
17	05133588AA	2	2, 3, 6, 7		13, 15, 17, 53, 55	EG2, EXM			GROMMET
18	68012624AA	2	2, 3, 6, 7			EG2, EXM			O RING
19	68012615AA	1	2, 3, 6, 7		13, 15, 17, 53, 55	EG2, EXM			HOSE, Heater, Feed
20	68012611AA	1	2, 3, 6, 7		13, 15, 17, 53, 55	EG2, EXM			HOUSING, Heater, Additional Heater
21	06104121AA	2	2, 3, 6, 7		13, 15, 17, 53, 55	EG2, EXM			SCREW, Hex Flange Head, Mounting to Longitudinal Member Bottom M6x16
22	68012612AA	2	2, 3, 6, 7			EG2, EXM			WASHER, With [HDC]
23	06104580AA	2	2, 3, 6, 7		13, 15, 17, 53, 55	EG2, EXM			SCREW, Tapping, Heating to Cross Member 6.3x13

SPRINTER (VB)

SERIES	LINE	BODY	ENGINE	TRANSMISSION
L = LOWLINE	3 = HD DODGE 2WD 6 = Lt. Duty DODGE 4WD 2 = Med. Duty DODGE 2WD 7 = Med. Duty DODGE 4WD	17 = VAN WHEEL BASE 7 55 = WAGON WHEEL BASE 5 15 = VAN WHEEL BASE 5 53 = 119 WB 13 = 119 WB 05 = CAB CHASSIS WHEEL BASE 5 03 = CAB CHASSIS WHEEL BASE 3	EG2 = 3.5L V6 Gas Engine EXM = 3.0L V6 Turbo Diesel Engine	DGZ = 5-Speed Auto W5A380 Transmission

Heat Exchange
Figure 24-106

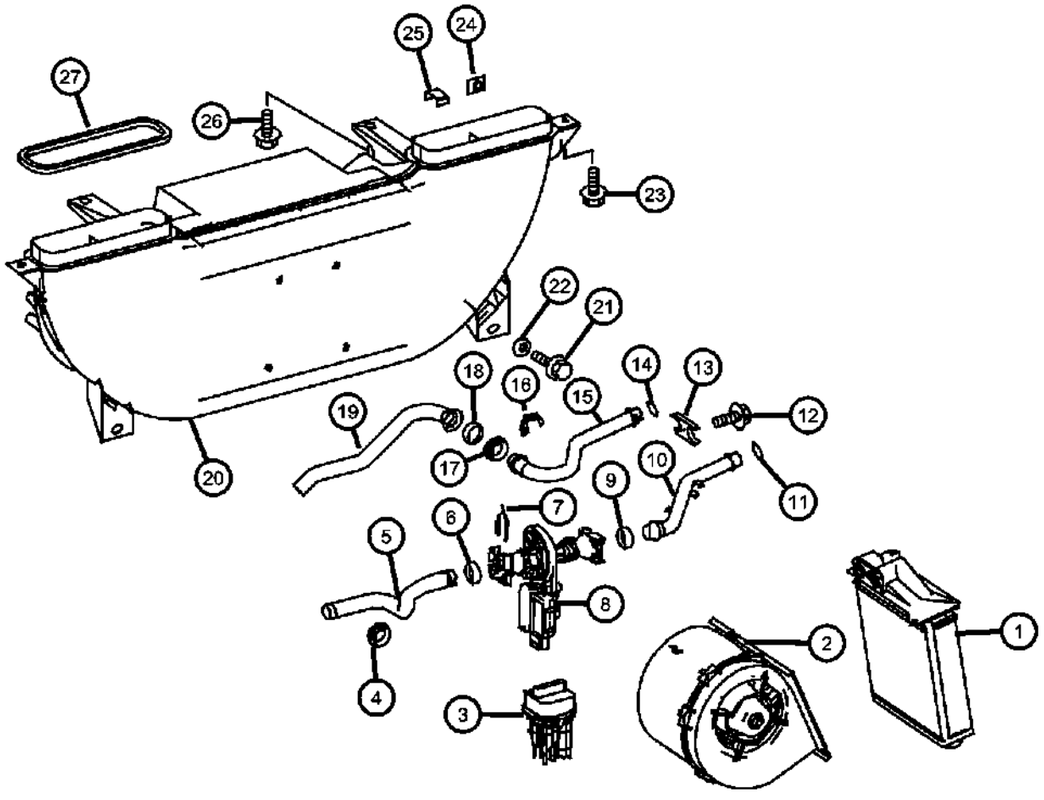

ITEM	PART NUMBER	QTY	LINE	SERIES	BODY	ENGINE	TRANS	TRIM	DESCRIPTION
24	68011920AA	1	2, 3, 6, 7			EG2			RETAINER, Plug Connections
25	05133592AA	21	2, 3, 6, 7		13, 15, 17, 53, 55	EG2, EXM			CLIP, HEATER, Cover to Box
26									SCREW
	05073723AB	2	3, 7		03, 05	EG2, EXM			Heating to Stay M8x20
		2	2, 3, 6, 7		13, 15, 17, 53, 55	EG2, EXM			Heating to Stay M8x20
27	05133593AA	2	2, 3, 6, 7		13, 15, 17, 53, 55	EG2, EXM			GASKET, Heater duct, Intake Air Duct
-28	05133486AA	2	2, 3, 6, 7		13, 15, 17, 53, 55	EG2, EXM			RIVET, Heating to Cross Member

SPRINTER (VB)

SERIES	LINE	BODY	ENGINE	TRANSMISSION
L = LOWLINE	3 = HD DODGE 2WD 6 = Lt. Duty DODGE 4WD 2 = Med. Duty DODGE 2WD 7 = Med. Duty DODGE 4WD	17 = VAN WHEEL BASE 7 55 = WAGON WHEEL BASE 5 15 = VAN WHEEL BASE 5 53 = 119 WB 13 = 119 WB 05 = CAB CHASSIS WHEEL BASE 5 03 = CAB CHASSIS WHEEL BASE 3	EG2 = 3.5L V6 Gas Engine EXM = 3.0L V6 Turbo Diesel Engine	DGZ = 5-Speed Auto W5A380 Transmission

Ventilation Case
Figure 24-107

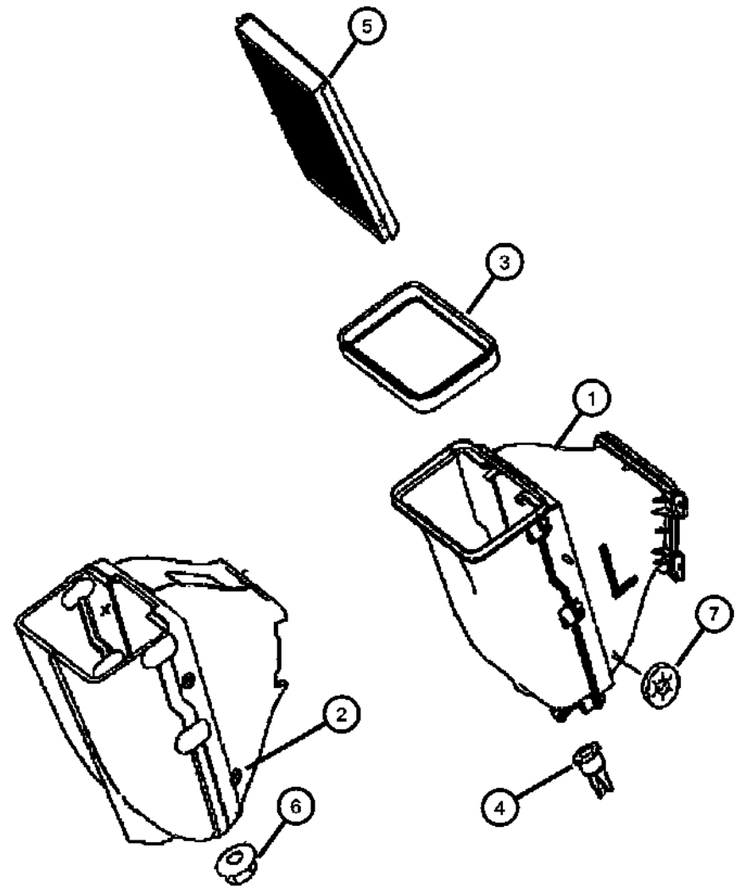

ITEM	PART NUMBER	QTY	LINE	SERIES	BODY	ENGINE	TRANS	TRIM	DESCRIPTION
1	68012873AA	1	2, 3, 6, 7			EG2, EXM			HOUSING
2	68012874AA	1	2, 3, 6, 7			EG2, EXM			INSULATION
3	68012875AA	1	2, 3, 6, 7			EG2, EXM			SEAL
4									TUBE, Wiper Drain Module
	05101626AA	1	2, 3, 6, 7		13, 15, 17, 53, 55	EG2, EXM			
		1	3, 7		03, 05	EG2, EXM			
5	68012876AA	1	2, 3, 6, 7			EG2, EXM			FILTER, A/C and Heater Unit
6									NUT
	68004878AA	1	3, 7		03, 05	EG2, EXM			
		1	2, 3, 6, 7		13, 15, 17, 53, 55	EG2, EXM			
7	68012878AA	4	2, 3, 6, 7			EG2, EXM			WASHER, Lock

SPRINTER (VB)

SERIES	LINE	BODY	ENGINE	TRANSMISSION
L = LOWLINE	3 = HD DODGE 2WD 6 = Lt. Duty DODGE 4WD 2 = Med. Duty DODGE 2WD 7 = Med. Duty DODGE 4WD	17 = VAN WHEEL BASE 7 55 = WAGON WHEEL BASE 5 15 = VAN WHEEL BASE 5 53 = 119 WB 13 = 119 WB 05 = CAB CHASSIS WHEEL BASE 5 03 = CAB CHASSIS WHEEL BASE 3	EG2 = 3.5L V6 Gas Engine EXM = 3.0L V6 Turbo Diesel Engine	DGZ = 5-Speed Auto W5A380 Transmission

Condenser And Auxilary Fan
Figure 24-108

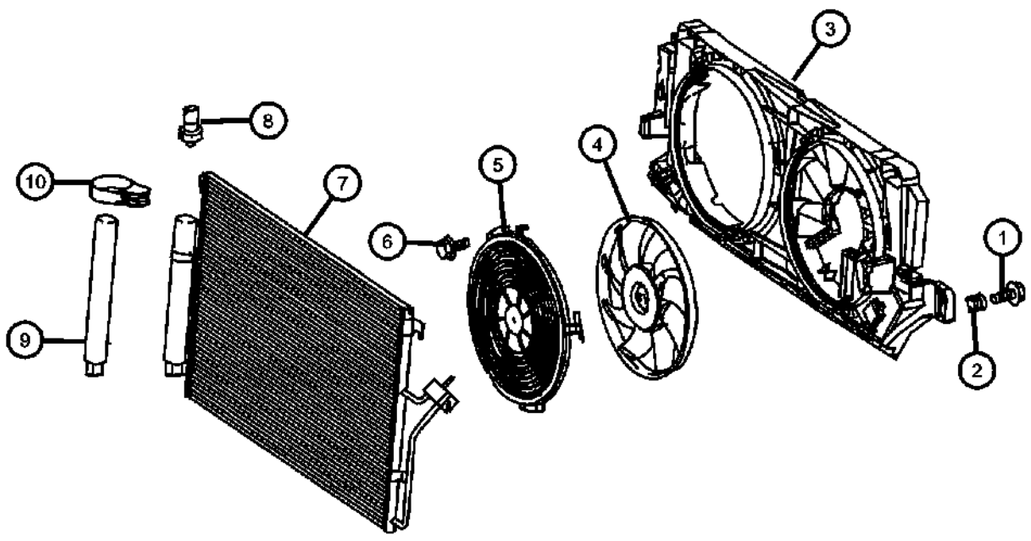

ITEM	PART NUMBER	QTY	LINE	SERIES	BODY	ENGINE	TRANS	TRIM	DESCRIPTION
1	68006685AA	4	2, 3, 6, 7			EG2, EXM			SCREW, Protective Grille to Radiator 5x16
2	68013663AA	4	2, 3, 6, 7			EG2, EXM			BUSHING, At Condenser
3									SHROUD, Fan
	68013664AA	1	2, 3, 6, 7		13, 15, 17	EG2, EXM			With [HAB+(CWC%XJW%XJ1%XJY]
		1	3, 7		03, 05	EG2, EXM			With [HAB]
4									FAN
	68013666AA	1	2, 3, 6, 7		13, 15, 17	EG2, EXM			With Single & Dual Fan Set Up, Left
		1	3, 7		03, 05	EG2, EXM			With Single & Dual Fan Set Up, Left
	68013672AA	1	2, 3, 6, 7		13, 15, 17, 53, 55	EG2, EXM			With Dual Fan Set Up Only, Right
5	68013665AA	2	2, 3, 6, 7			EG2, EXM			GRILLE
6	68013667AA	3	2, 3, 6, 7			EG2, EXM			SCREW, Blower to Protective Grille
7	68013633AA	1	2, 3, 6, 7			EG2, EXM			CONDENSER, A/C
8	68019266AA	1	2, 3, 6, 7			EG2, EXM			SWITCH, A/C Pressure
9	68013634AA	1	2, 3, 6, 7			EG2, EXM			RECEIVER DRIER
10	68013635AA	1	2, 3, 6, 7			EG2, EXM			BRACKET, Drying Insert

SPRINTER (VB)

SERIES	LINE	BODY	ENGINE	TRANSMISSION
L = LOWLINE	3 = HD DODGE 2WD 6 = Lt. Duty DODGE 4WD 2 = Med. Duty DODGE 2WD 7 = Med. Duty DODGE 4WD	17 = VAN WHEEL BASE 7 55 = WAGON WHEEL BASE 5 15 = VAN WHEEL BASE 5 53 = 119 WB 13 = 119 WB 05 = CAB CHASSIS WHEEL BASE 5 03 = CAB CHASSIS WHEEL BASE 3	EG2 = 3.5L V6 Gas Engine EXM = 3.0L V6 Turbo Diesel Engine	DGZ = 5-Speed Auto W5A380 Transmission

Roof Mounted Ventilator
Figure 24-109

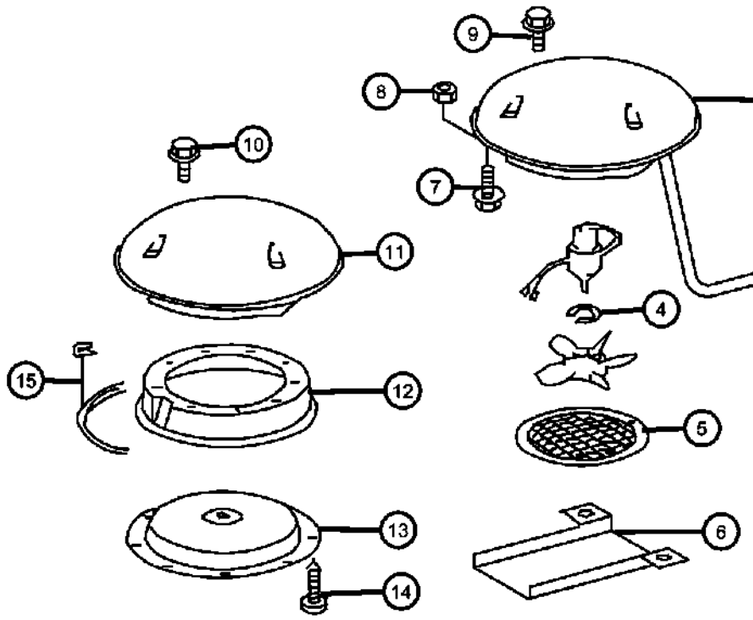

ITEM	PART NUMBER	QTY	LINE	SERIES	BODY	ENGINE	TRANS	TRIM	DESCRIPTION
1	05103696AA	1	2, 3, 6, 7		13, 15, 17	EG2, EXM			FAN
2	05103751AA	2	2, 3, 6, 7		13, 15, 17, 53, 55	EG2, EXM			CONNECTOR
3	05103754AA	1	2, 3, 6, 7			EG2, EXM			INSULATOR, 2 Way Female
4	05103696AA	1	2, 3, 6, 7		13, 15, 17	EG2, EXM			FAN
5	05133638AA	1	2, 3, 6, 7		13, 15, 17, 53, 55	EG2, EXM			GRILLE, Vent
6	05124790AA	1	2, 3, 6, 7		13, 15, 17, 53, 55	EG2, EXM			COVER, Bracket
7	05135207AA	9	2, 3, 6, 7		13, 15, 17, 53, 55	EG2, EXM			SCREW
8	05098361AA	9	2, 3, 6, 7		13, 15, 17, 53, 55	EG2, EXM			NUT, Hex
9	05126198AA	9	2, 3, 6, 7		13, 15, 17, 53, 55	EG2, EXM			BOLT, M6x20
10	05135207AA	9	2, 3, 6, 7		13, 15, 17, 53, 55	EG2, EXM			SCREW
11	05134596AA	1	2		15, 17	EG2, EXM			EXHAUSTER, Interior Trim Panel
12	05134597AA	1	2, 3, 6, 7		13, 15, 17, 53, 55	EG2, EXM			RETAINER
13	05134600AA	1	2, 3, 6, 7		13, 15, 17, 53, 55	EG2, EXM			EXHAUSTER, Interior Trim Panel
14	05126095AA	6	2, 3, 6, 7		13, 15, 17, 53, 55	EG2, EXM			SCREW, Tapping
15	05135206AA	AR	2, 3, 6, 7		13, 15, 17, 53, 55	EG2, EXM			WEATHERSTRIP

SPRINTER (VB)

SERIES	LINE	BODY	ENGINE	TRANSMISSION
L = LOWLINE	3 = HD DODGE 2WD 6 = Lt. Duty DODGE 4WD 2 = Med. Duty DODGE 2WD 7 = Med. Duty DODGE 4WD	17 = VAN WHEEL BASE 7 55 = WAGON WHEEL BASE 5 15 = VAN WHEEL BASE 5 53 = 119 WB 13 = 119 WB 05 = CAB CHASSIS WHEEL BASE 5 03 = CAB CHASSIS WHEEL BASE 3	EG2 = 3.5L V6 Gas Engine EXM = 3.0L V6 Turbo Diesel Engine	DGZ = 5-Speed Auto W5A380 Transmission

Roof Air Conditioner Unit
Figure 24-170

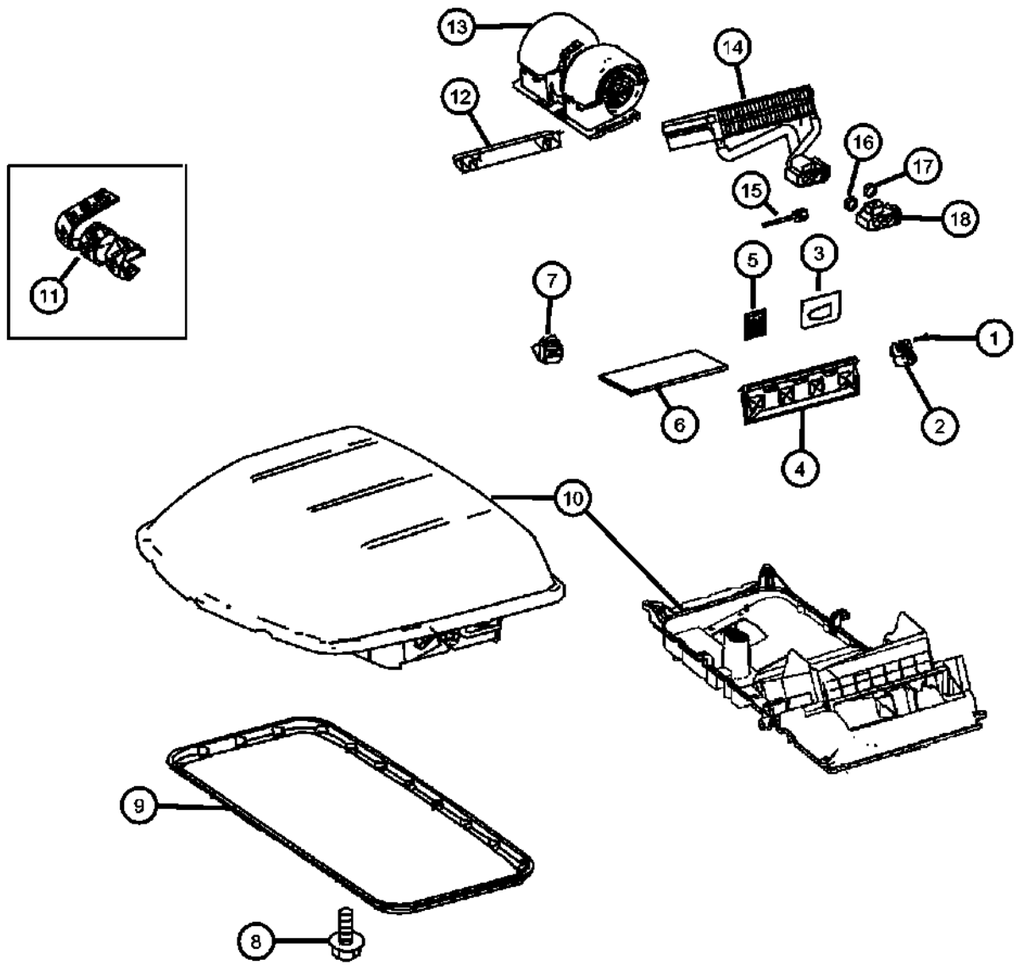

ITEM	PART NUMBER	QTY	LINE	SERIES	BODY	ENGINE	TRANS	TRIM	DESCRIPTION
1	68012630AA	3	2, 3, 6, 7		13, 15, 17, 53, 55	EG2, EXM			SCREW, Engine Fixing 4x16
2	68012629AA	1	2, 6		53, 55	EG2, EXM			MOTOR
3	68012636AA	1	2, 6		53, 55	EG2, EXM			SEAL, Lateral
4	68012639AA	1	2, 6		53, 55	EG2, EXM			DOOR, Air Mixing Flap
5	68011920AA	2	2, 3, 6, 7		13, 15, 17, 53, 55	EG2, EXM			RETAINER, Plug Connection
6	68012628AA	1	2, 6		53, 55	EG2, EXM			FILTER, Air
7	68012613AA	1	2, 3, 6, 7			EG2, EXM			RESISTOR, Blower Motor
8	06104118AA	22	2, 3, 6, 7		13, 15, 17, 53, 55	EG2, EXM			SCREW, Torx, M5X0.8X20
9	68012609AA	1	2, 6		53, 55	EG2, EXM			FRAME
10	68012608AA	1	2, 6		53, 55	EG2, EXM			HOUSING, Serviced as an Assembly
11	05132378AA	60	2, 3, 6, 7		13, 15, 17, 53, 55	EG2, EXM			ISOLATOR
12	68012638AA	1	2, 6		53, 55	EG2, EXM			DOOR
13	68012631AA	1	2, 6		53, 55	EG2, EXM			MOTOR, Blower with Wheel
14	68012632AA	1	2, 6		53, 55	EG2, EXM			EVAPORATOR, Air Conditioning
15	68012635AA	1	2, 6		53, 55	EG2, EXM			SENSOR, Temperature
16	05103930AA	1	2, 3, 6, 7		13, 15, 17, 53, 55	EG2, EXM			O RING, A/C Line
17	05098971AA	1	2, 3, 6, 7		13, 15, 17, 53, 55	EG2, EXM			O RING, A/C Line
18	68012634AA	1	2, 6		53, 55				VALVE, Expansion

SPRINTER (VB)

SERIES	LINE	BODY	ENGINE	TRANSMISSION
L = LOWLINE	3 = HD DODGE 2WD 6 = Lt. Duty DODGE 4WD 2 = Med. Duty DODGE 2WD 7 = Med. Duty DODGE 4WD	17 = VAN WHEEL BASE 7 55 = WAGON WHEEL BASE 5 15 = VAN WHEEL BASE 5 53 = 119 WB 13 = 119 WB 05 = CAB CHASSIS WHEEL BASE 5 03 = CAB CHASSIS WHEEL BASE 3	EG2 = 3.5L V6 Gas Engine EXM = 3.0L V6 Turbo Diesel Engine	DGZ = 5-Speed Auto W5A380 Transmission

Roof Air Conditioner Unit
Figure 24-171

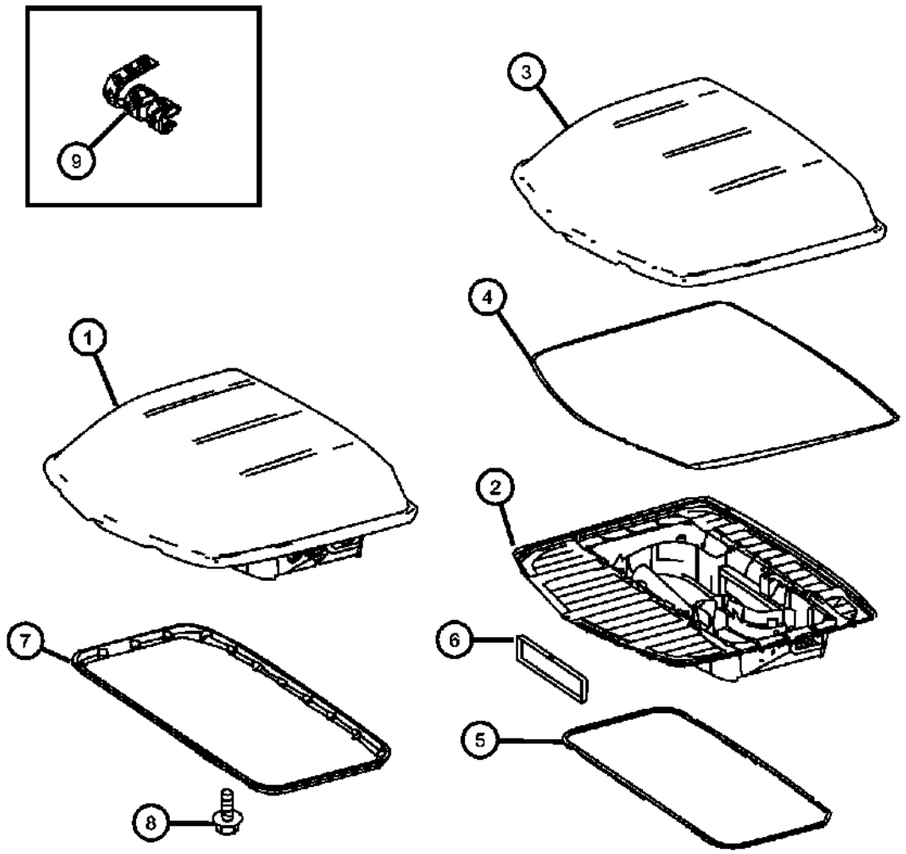

ITEM	PART NUMBER	QTY	LINE	SERIES	BODY	ENGINE	TRANS	TRIM	DESCRIPTION
1	68012608AA	1	2, 6		53, 55	EG2, EXM			HOUSING, Complete Housing
2	68024096AA	1	2, 6		53, 55	EG2, EXM			CONDENSER, A/C, Lower Cover
3	68012627AA	1	2, 6		53, 55	EG2, EXM			HOUSING, Upper Cover
4	68012640AA	1	2, 6		53, 55	EG2, EXM			FRAME, Seal
5	68012637AA	1	2, 6		53, 55	EG2, EXM			SEAL
6	68012641AA	1	2, 6		53, 55	EG2, EXM			FRAME, Seal, Air Outlet
7	68012609AA	1	2, 6		53, 55	EG2, EXM			FRAME, A/C Unit Seat
8	06104118AA	22	2, 3, 6, 7		13, 15, 17, 53, 55	EG2, EXM			SCREW, Torx, M5X0.8X20
9	05132378AA	60	2, 3, 6, 7		13, 15, 17, 53, 55	EG2, EXM			ISOLATOR

SPRINTER (VB)

SERIES	LINE	BODY	ENGINE	TRANSMISSION
L = LOWLINE	3 = HD DODGE 2WD 6 = Lt. Duty DODGE 4WD 2 = Med. Duty DODGE 2WD 7 = Med. Duty DODGE 4WD	17 = VAN WHEEL BASE 7 55 = WAGON WHEEL BASE 5 15 = VAN WHEEL BASE 5 53 = 119 WB 13 = 119 WB 05 = CAB CHASSIS WHEEL BASE 5 03 = CAB CHASSIS WHEEL BASE 3	EG2 = 3.5L V6 Gas Engine EXM = 3.0L V6 Turbo Diesel Engine	DGZ = 5-Speed Auto W5A380 Transmission

AR = use ase required - = Non illustrrated part

<< RETURN TO GROUP INDEX

Roof Air Conditioner Unit
Figure 24-173

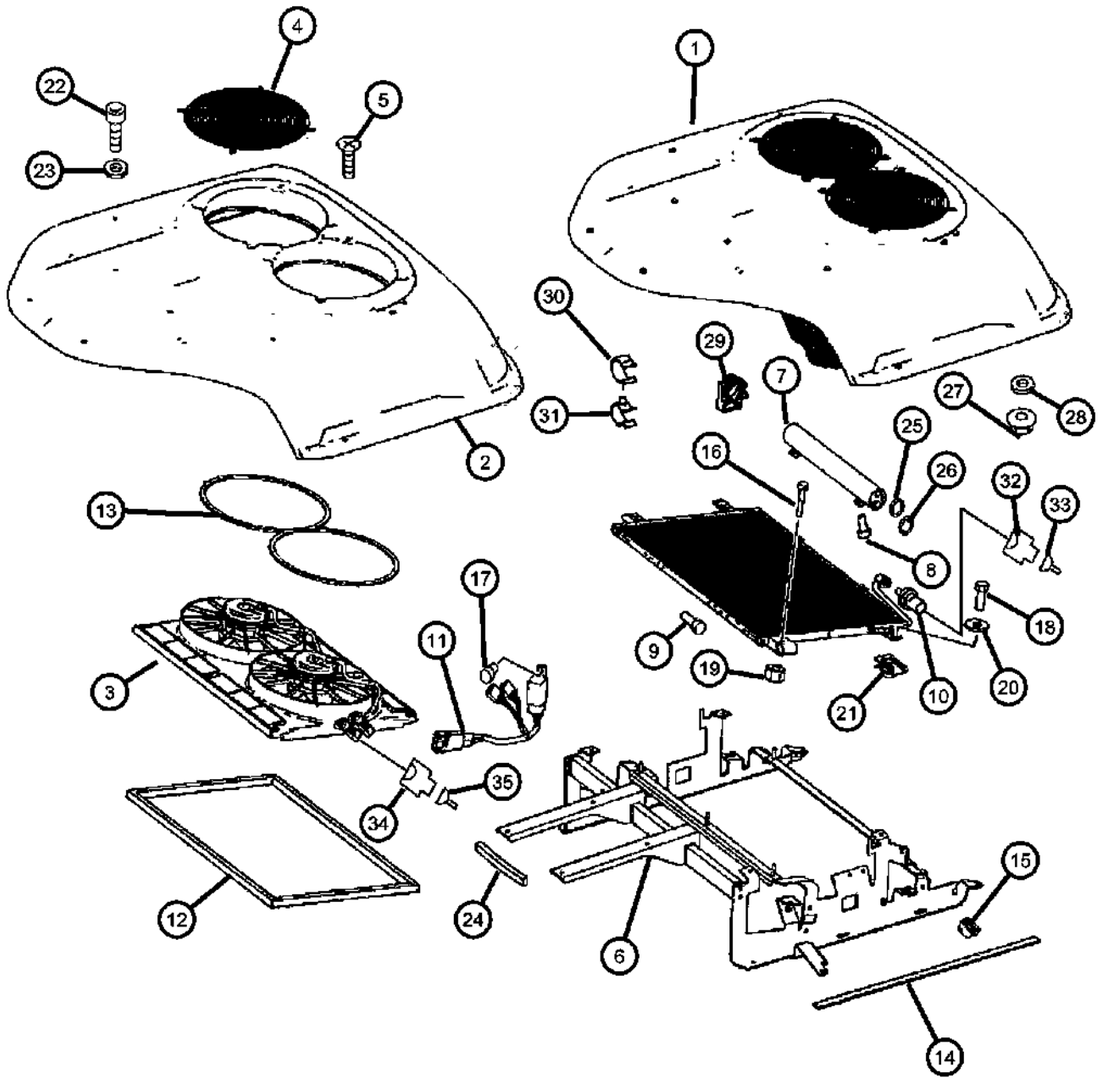

ITEM	PART NUMBER	QTY	LINE	SERIES	BODY	ENGINE	TRANS	TRIM	DESCRIPTION
1	68012610AA	1	2, 6		53, 55	EG2, EXM			CONDENSER, A/C, Complete Unit
2	68012642AA	1	2, 6		53, 55	EG2, EXM			COVER, Cover Only
3	68012643AA	1	2, 6		53, 55	EG2, EXM			MODULE, Cooling
4	68012644AA	2	2, 6		53, 55	EG2, EXM			GRILLE
5	68012645AA	8	2, 6		53, 55	EG2, EXM			SCREW
6	68012646AA	1	2, 6		53, 55	EG2, EXM			CONDENSER, A/C, Frame
7	68012647AA	1	2, 6		53, 55	EG2, EXM			DRIER, Air Conditioning Filter
8	68012648AA	2	2, 6		53, 55	EG2, EXM			SCREW
9	06104123AA	4	2, 3, 6, 7		13, 15, 17, 53, 55	EG2, EXM			SCREW
10	68012649AA	1	2, 3, 6, 7			EG2, EXM			SWITCH, A/C Pressure
11	68012650AA	1	2, 6		53, 55	EG2, EXM			WIRING
12	68012651AA	1	2, 6		53, 55	EG2, EXM			SEAL
13	68012652AA	2	2, 6		53, 55	EG2, EXM			SEAL
14	68012653AA	1	2, 6		53, 55	EG2, EXM			SEAL
15	68012654AA	2	2, 6		53, 55	EG2, EXM			CLIP
16	68012655AA	1	2, 6		53, 55	EG2, EXM			SCREW
17	05104672AA	1	2, 3, 6, 7		13, 15, 17, 53, 55	EG2, EXM			NUT, Hex
18	68012657AA	3	2, 6		53, 55	EG2, EXM			SCREW
19	68012656AA	1	2, 6		53, 55	EG2, EXM			NUT
20	05098108AA	4	2, 3, 6, 7		13, 15, 17, 53, 55	EG2, EXM			WASHER, Flat
21	68012658AA	3	2, 6		53, 55	EG2, EXM			NUT
22	68012659AA	10	2, 6		53, 55	EG2, EXM			SCREW
23	68012660AA	10	2, 6		53, 55	EG2, EXM			WASHER
24	68012661AA	1	2, 6		53, 55	EG2, EXM			SEAL
25	05098970AA	1	2, 3, 6, 7		13, 15, 17, 53, 55	EXM, EG2			O RING, A/C Line, [7.5 X 2 MM]
26	05103571AA	1	2, 3, 6, 7		53, 55	EG2, EXM			O RING, Air Conditioning Line, [9.5 X 2.5 MM]
27	06105169AA	6	2, 3, 6, 7		13, 15, 17, 53, 55	EG2, EXM			NUT
28	05142916AA	6	2, 3, 6, 7		13, 15, 17, 53, 55	EG2, EXM			WASHER
29	68012740AA	1	2, 3, 6, 7			EG2, EXM			BRACKET, Hose

SPRINTER (VB)

SERIES	LINE	BODY	ENGINE	TRANSMISSION
L = LOWLINE	3 = HD DODGE 2WD 6 = Lt. Duty DODGE 4WD 2 = Med. Duty DODGE 2WD 7 = Med. Duty DODGE 4WD	17 = VAN WHEEL BASE 7 55 = WAGON WHEEL BASE 5 15 = VAN WHEEL BASE 5 53 = 119 WB 13 = 119 WB 05 = CAB CHASSIS WHEEL BASE 5 03 = CAB CHASSIS WHEEL BASE 3	EG2 = 3.5L V6 Gas Engine EXM = 3.0L V6 Turbo Diesel Engine	DGZ = 5-Speed Auto W5A380 Transmission

Roof Air Conditioner Unit
Figure 24-173

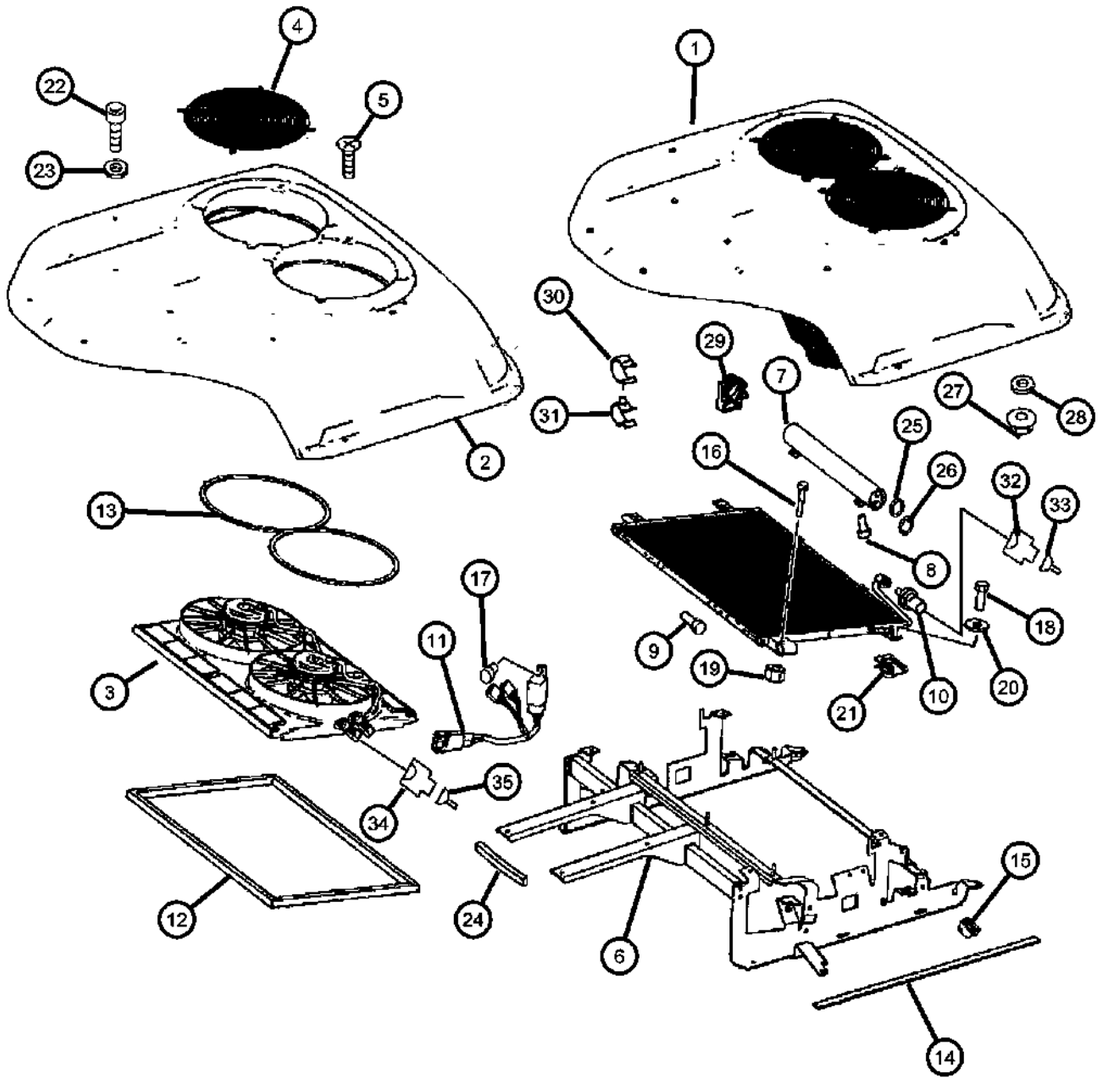

ITEM	PART NUMBER	QTY	LINE	SERIES	BODY	ENGINE	TRANS	TRIM	DESCRIPTION
30	06104923AA	1	2, 6		13, 15, 17, 53, 55	EG2			CLAMP, Hose
31	06104918AA	1	2, 6		13, 15, 17, 53, 55	EG2			CLAMP, Hose
32	05120278AA	1	2, 3, 6, 7			EG2, EXM			CONNECTOR
33	05103873AA	3	2, 3, 6, 7		13, 15, 17, 53, 55	EG2, EXM			TERMINAL
34	05120761AA	1	2, 3, 6, 7			EG2, EXM			CONNECTOR
35	68016721AA	AR	2, 3, 6, 7			EG2, EXM			TERMINAL

SPRINTER (VB)

SERIES	LINE	BODY	ENGINE	TRANSMISSION
L = LOWLINE	3 = HD DODGE 2WD 6 = Lt. Duty DODGE 4WD 2 = Med. Duty DODGE 2WD 7 = Med. Duty DODGE 4WD	17 = VAN WHEEL BASE 7 55 = WAGON WHEEL BASE 5 15 = VAN WHEEL BASE 5 53 = 119 WB 13 = 119 WB 05 = CAB CHASSIS WHEEL BASE 5 03 = CAB CHASSIS WHEEL BASE 3	EG2 = 3.5L V6 Gas Engine EXM = 3.0L V6 Turbo Diesel Engine	DGZ = 5-Speed Auto W5A380 Transmission

AR = use ase required - = Non illustrrated part

<< RETURN TO GROUP INDEX

Rear A/C Condensed Water Drain
Figure 24-205

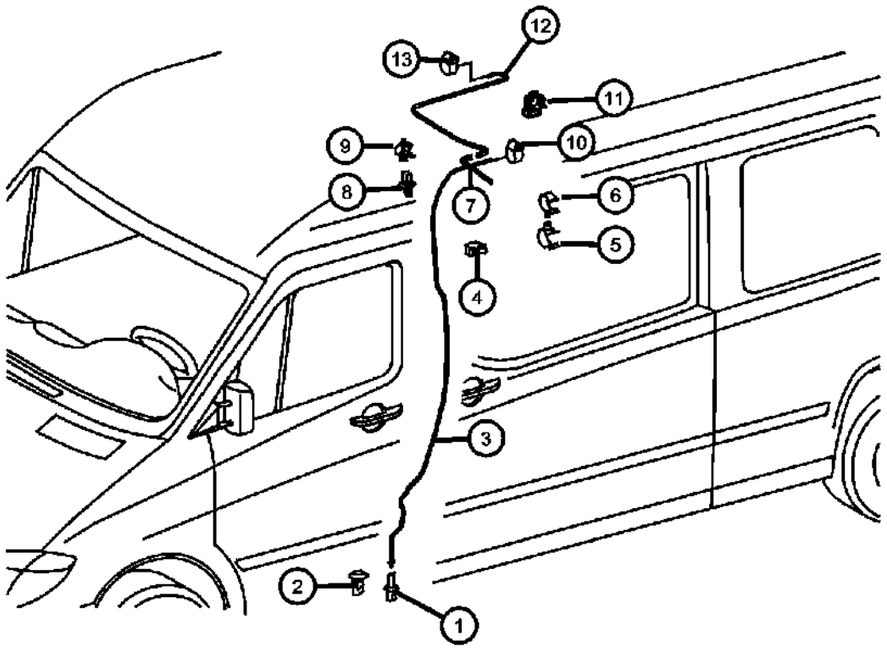

ITEM	PART NUMBER	QTY	LINE	SERIES	BODY	ENGINE	TRANS	TRIM	DESCRIPTION
1	68012795AA	1	2, 6		53, 55	EG2, EXM			HOSE, Drain
2	68012793AA	1	2, 6		53, 55	EG2, EXM			GROMMET
3									HOSE, Drain
	68012791AA	1	2, 3, 6, 7		53, 55	EG2, EXM			Extra High Roof
	68012792AA	1	2, 3, 6, 7		53, 55	EG2, EXM			
4	06104775AA	11	2, 3, 6, 7		13, 15, 17, 53, 55	EG2, EXM			CLAMP, 6.5x14.5
5	06104921AA	1	2, 3, 6, 7		13, 15, 17, 53, 55	EG2, EXM			CLAMP, Fuel Line
6	06104918AA	2	2, 3, 6, 7		13, 15, 17, 53, 55	EG2, EXM			CLAMP, Hose
7									HOSE, Drain
	68012789AA	1	2, 6		53, 55	EG2, EXM			Extra High Roof
	68012790AA	1	2, 6		53, 55	EG2, EXM			
8	05096566AA	2	2, 3, 6, 7		13, 15, 17, 53, 55	EG2, EXM			CLIP, Hose
9	05080431AB	1	2, 6		53, 55	EXM, EG2			CLAMP, 11MM
10	05135881AA	4	2, 3, 6, 7		13, 15, 17, 53, 55	EXM			CLAMP
11	68012740AA	1	2, 3, 6, 7			EG2, EXM			BRACKET, Hose
12									HOSE, Drain
	68012785AA	1	2, 3, 6, 7		53, 55	EG2, EXM			Extra High Roof
	68012786AA	1	2, 3, 6, 7		53, 55	EG2, EXM			
13	05135881AA	2	2, 3, 6, 7			EG2, EXM			CLAMP

SPRINTER (VB)

SERIES	LINE	BODY	ENGINE	TRANSMISSION
L = LOWLINE	3 = HD DODGE 2WD 6 = Lt. Duty DODGE 4WD 2 = Med. Duty DODGE 2WD 7 = Med. Duty DODGE 4WD	17 = VAN WHEEL BASE 7 55 = WAGON WHEEL BASE 5 15 = VAN WHEEL BASE 5 53 = 119 WB 13 = 119 WB 05 = CAB CHASSIS WHEEL BASE 5 03 = CAB CHASSIS WHEEL BASE 3	EG2 = 3.5L V6 Gas Engine EXM = 3.0L V6 Turbo Diesel Engine	DGZ = 5-Speed Auto W5A380 Transmission

Auxiliary Warm Water Heater Mounting
Figure 24-210

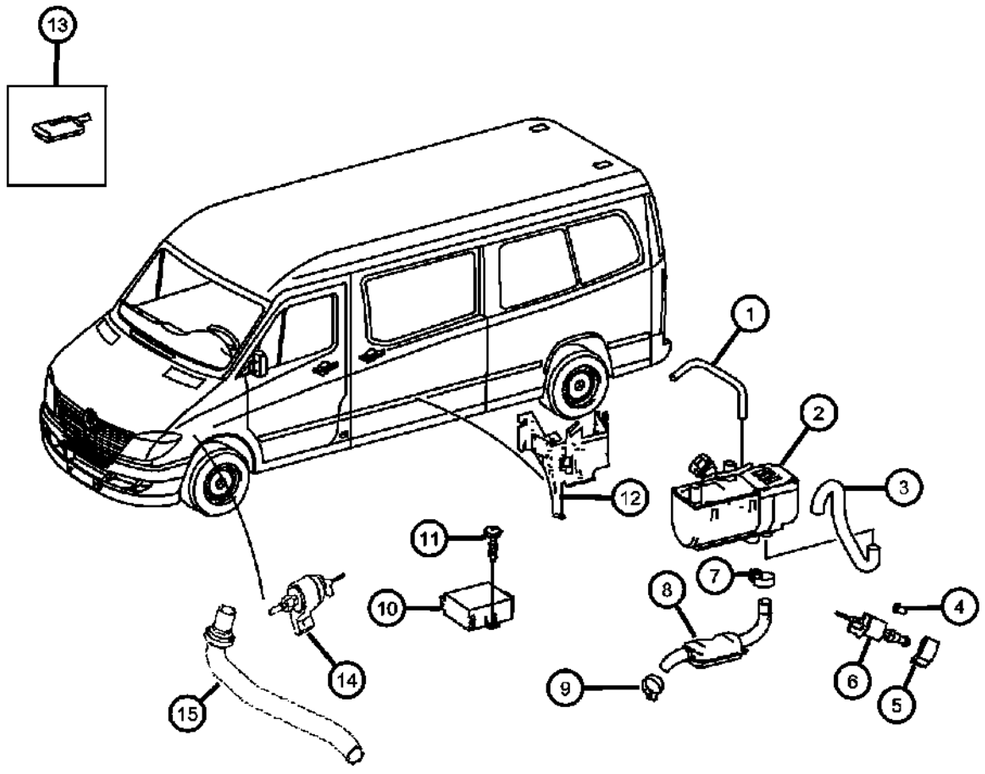

ITEM	PART NUMBER	QTY	LINE	SERIES	BODY	ENGINE	TRANS	TRIM	DESCRIPTION
1	68012853AA	1	2, 3, 6, 7			EXM			HOSE, Fuel
2	68026061AA	1	2, 3, 6, 7			EXM			HEATER, Supplemental Diesel Fuel
3	68012854AA	1	2, 3, 6, 7			EG2, EXM			HOSE
4	05143168AA	1	2, 3, 6, 7		13, 15, 17, 53, 55	EXM			STRAINER
5	68012850AA	1	2, 3, 6, 7			EXM			BRACKET
6	68012848AA	1	2, 3, 6, 7			EXM			PUMP, Fuel
7	05124716AA	1	2, 3, 6, 7			EG2, EXM			CLAMP, Hose
8	68012851AA	2	2, 3, 6, 7			EXM			MUFFLER, Exhaust
9	68012852AA	2	2, 3, 6, 7			EXM			CLAMP
10	68013548AA	1	2, 3, 6, 7			EG2, EXM			MODULE
11	06104566AA	2	2, 3, 6, 7		13, 15, 17, 53, 55	EG2, EXM			SCREW, Tapping
12	68012847AA	1	2, 3, 6, 7			EXM			BRACKET
13	68013547AA	1	2, 3, 6, 7			EG2, EXM			REMOTE
14	68012848AA	1	2, 3, 6, 7			EXM			PUMP, Fuel
15	68020832AA	1	2, 3, 6, 7			EG2, EXM			HOSE

SPRINTER (VB)

SERIES	LINE	BODY	ENGINE	TRANSMISSION
L = LOWLINE	3 = HD DODGE 2WD 6 = Lt. Duty DODGE 4WD 2 = Med. Duty DODGE 2WD 7 = Med. Duty DODGE 4WD	17 = VAN WHEEL BASE 7 55 = WAGON WHEEL BASE 5 15 = VAN WHEEL BASE 5 53 = 119 WB 13 = 119 WB 05 = CAB CHASSIS WHEEL BASE 5 03 = CAB CHASSIS WHEEL BASE 3	EG2 = 3.5L V6 Gas Engine EXM = 3.0L V6 Turbo Diesel Engine	DGZ = 5-Speed Auto W5A380 Transmission

AR = use ase required - = Non illustrrated part

Auxiliary Warm Water Heater Mounting
Figure 24-215

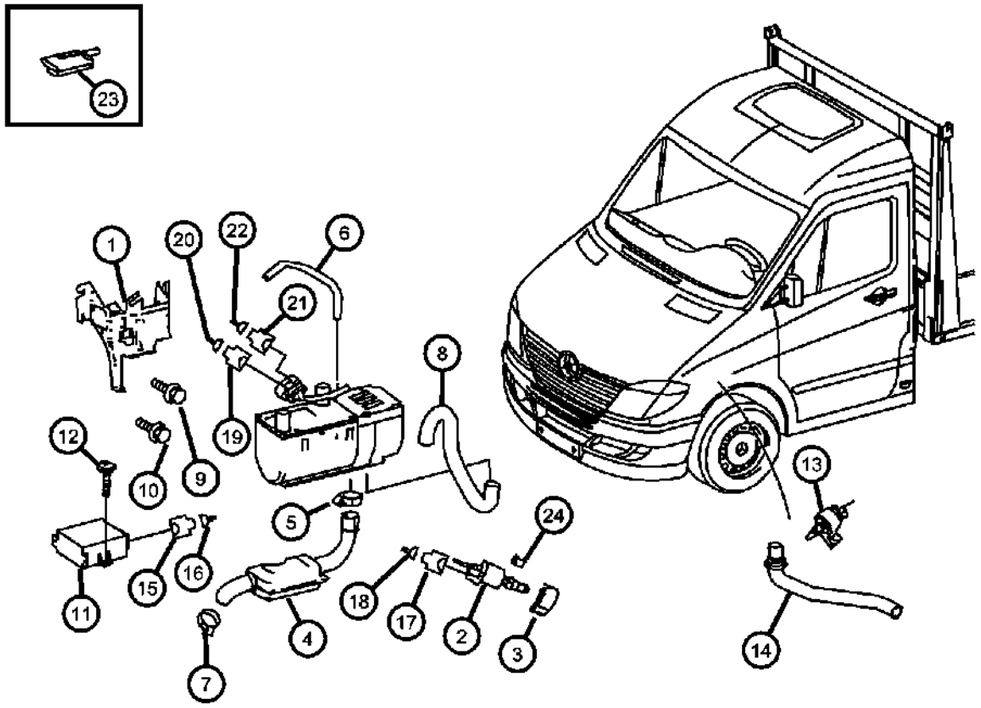

ITEM	PART NUMBER	QTY	LINE	SERIES	BODY	ENGINE	TRANS	TRIM	DESCRIPTION
1	68012847AA	1	2, 3, 6, 7			EXM			BRACKET
2	68012849AA	1	2, 3, 6, 7			EXM			PUMP, Fuel
3	68012850AA	1	2, 3, 6, 7			EXM			BRACKET
4	68012851AA	1	2, 3, 6, 7			EXM			MUFFLER, Exhaust
5	05124716AA	1	2, 3, 6, 7			EG2, EXM			CLAMP, Hose
6	68012853AA	2	2, 3, 6, 7			EXM			HOSE, Fuel
7	68012852AA	2	2, 3, 6, 7			EXM			CLAMP
8	68012854AA	1	2, 3, 6, 7			EG2, EXM			HOSE
9	68012855AA	2	2, 3, 6, 7			EXM			SCREW
10	05183964AA	1	2, 3, 6, 7			EXM			BOLT, Hex Flange Head, M6x1.00x10.90
11	68013548AA	1	2, 3, 6, 7			EG2, EXM			MODULE
12	06104566AA	2	2, 3, 6, 7			EG2, EXM			SCREW, Tapping
13	68012848AA	1	2, 3, 6, 7			EXM			PUMP, Fuel
14	68020832AA	1	2, 3, 6, 7			EG2, EXM			HOSE
15	05120786AA	1	2, 3, 6, 7			EG2, EXM			CONNECTOR, Stationary Heater Radio Recever [6 Pin; A49 / 4]
16	05103882AA	1	2, 3, 6, 7						TERMINAL, [0.5 - 1.0 MM2 JPT; A49 / 4]
17	05120749AA	1	2, 3, 6, 7			EG2, EXM			CONNECTOR, Metering Pump Aditional Heating [2 Pin; M46 / 1, M46 / 4]
18	05103880AA	AR	2, 3, 6, 7			EG2, EXM			TERMINAL, [0.5 - 1.0 MM2 JPT, M46 / 1, M46 / 4]
19	05133296AA	1	2, 3, 6, 7			EG2, EXM			CONNECTOR, Control Unit Independent Heating [8 Pin N33 / 3]
20	05133370AA	2	2, 3, 6, 7			EG2, EXM			TERMINAL, [1.5 - 2.5 MM2 JPT, N33 / 3]
21	68011286AA	1	2, 3, 6, 7			EG2, EXM			CONNECTOR, Control Unit Independent Heating [N33 / 3]
22	05103874AA	1	2, 3, 6, 7			EG2, EXM			TERMINAL, [0.75 MM2 MQS N33 / 3]
23	68013547AA	1	2, 3, 6, 7			EG2, EXM			REMOTE, With [XG2]
24	05143168AA	1	2, 3, 6, 7		13, 15, 17, 53, 55	EXM			STRAINER

SPRINTER (VB)

SERIES	LINE	BODY	ENGINE	TRANSMISSION
L = LOWLINE	3 = HD DODGE 2WD 6 = Lt. Duty DODGE 4WD 2 = Med. Duty DODGE 2WD 7 = Med. Duty DODGE 4WD	17 = VAN WHEEL BASE 7 55 = WAGON WHEEL BASE 5 15 = VAN WHEEL BASE 5 53 = 119 WB 13 = 119 WB 05 = CAB CHASSIS WHEEL BASE 5 03 = CAB CHASSIS WHEEL BASE 3	EG2 = 3.5L V6 Gas Engine EXM = 3.0L V6 Turbo Diesel Engine	DGZ = 5-Speed Auto W5A380 Transmission

AR = use ase required - = Non illustrrated part

<< RETURN TO GROUP INDEX

Auxiliary Warm Water Heater Service Parts
Figure 24-220

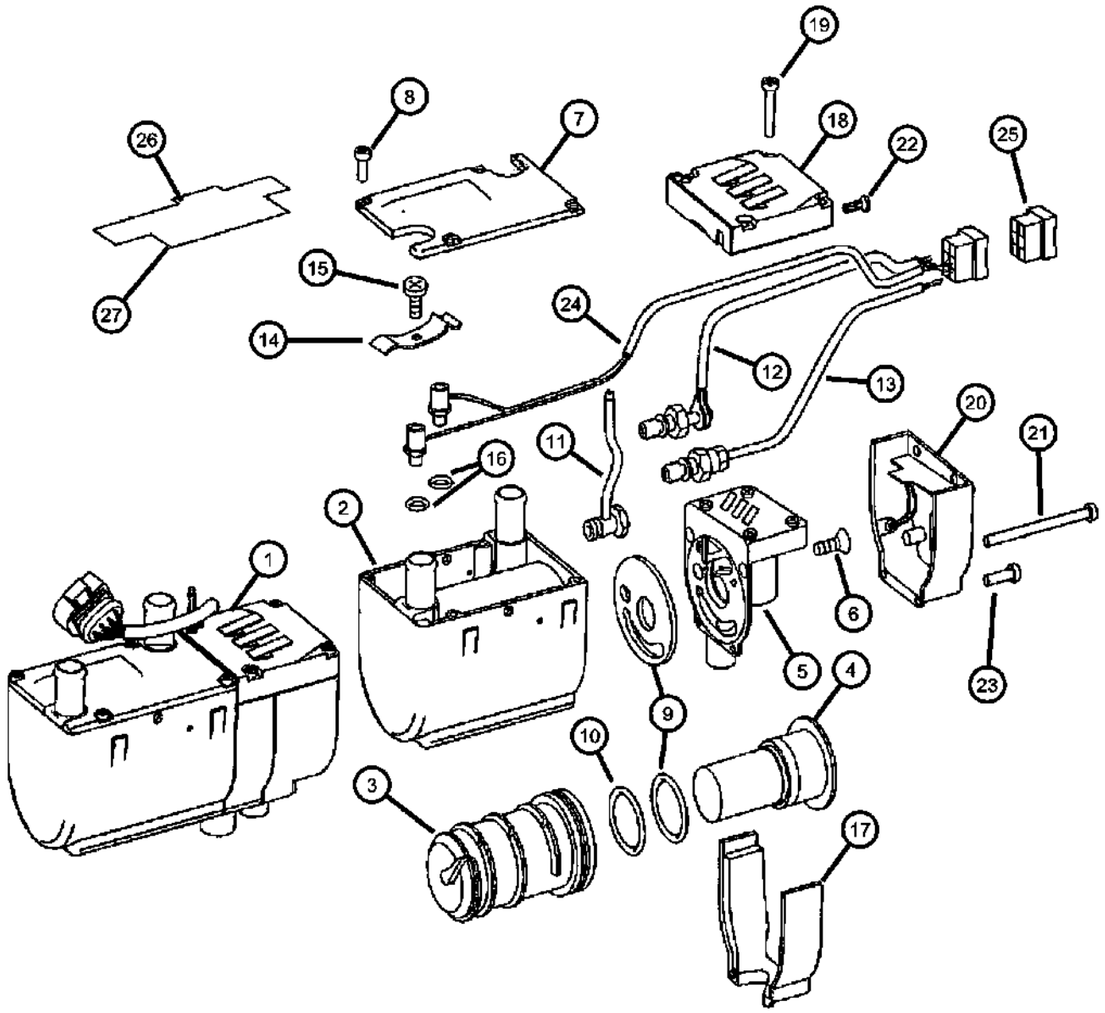

ITEM	PART NUMBER	QTY	LINE	SERIES	BODY	ENGINE	TRANS	TRIM	DESCRIPTION
1	68026061AA	1	2, 3, 6, 7			EXM			HEATER, Supplemental Diesel Fuel, Heater Assembly
2	68012829AA	1	2, 3, 6, 7			EXM			HOUSING, Heater
3	05143171AA	1	2, 3, 6, 7			EXM			HEATER, Supplemental Diesel Fuel
4	05143170AA	1	2, 3, 6, 7			EXM			LINE, Heater
5	68012831AA	1	2, 3, 6, 7			EXM			BLOWER
6	68012837AA	3	2, 3, 6, 7			EXM			SCREW
7	05133306AA	1	2, 3, 6, 7		13, 15, 17, 53, 55	EXM			COVER, Heater Housing
8	68012836AA	1	2, 3, 6, 7		13, 15, 17, 53, 55	EXM			SCREW
9	05133307AB	1	2, 3, 6, 7		13, 15, 17, 53, 55	EXM			SEAL
10	05133309AA	1	2, 3, 6, 7		13, 15, 17, 53, 55	EXM			O RING, Heater Core
11	68012832AA	1	2, 3, 6, 7		13, 15, 17, 53, 55	EXM			FITTING, FITTING
12	05143173AA	1	2, 3, 6, 7		13, 15, 17, 53, 55	EXM			PLUG, Glow
13	05103691AA	1	2, 3, 6, 7		13, 15, 17, 53, 55	EXM			SENSOR, Temperature
14	05133313AA	1	2, 3, 6, 7		13, 15, 17, 53, 55	EXM			CLIP, Spring
15	68012836AA	1	2, 3, 6, 7		13, 15, 17, 53, 55	EXM			SCREW
16	05143176AA	2	2, 3, 6, 7		13, 15, 17, 53, 55	EXM			O RING, Temperature Sensor
17	05143179AA	1	2, 3, 6, 7		13, 15, 17, 53, 55	EXM			DUCT, Control Unit Cover
18	68012835AA	1	2, 3, 6, 7		13, 15, 17, 53, 55	EXM			COVER
19	68012840AA	4	2, 3, 6, 7		13, 15, 17, 53, 55	EXM			SCREW
20	68027643AA	1	2, 3, 6, 7			EXM			MODULE
21	68012838AA	1	2, 3, 6, 7		13, 15, 17, 53, 55	EXM			SCREW
22	68012839AA	2	2, 3, 6, 7		13, 15, 17, 53, 55	EXM			SCREW
23	68012841AA	1	2, 3, 6, 7		13, 15, 17, 53, 55	EXM			SCREW
24	68012842AA	1	2, 3, 6, 7		13, 15, 17, 53, 55	EXM			WIRING

SPRINTER (VB)

SERIES	LINE	BODY	ENGINE	TRANSMISSION
L = LOWLINE	3 = HD DODGE 2WD 6 = Lt. Duty DODGE 4WD 2 = Med. Duty DODGE 2WD 7 = Med. Duty DODGE 4WD	17 = VAN WHEEL BASE 7 55 = WAGON WHEEL BASE 5 15 = VAN WHEEL BASE 5 53 = 119 WB 13 = 119 WB 05 = CAB CHASSIS WHEEL BASE 5 03 = CAB CHASSIS WHEEL BASE 3	EG2 = 3.5L V6 Gas Engine EXM = 3.0L V6 Turbo Diesel Engine	DGZ = 5-Speed Auto W5A380 Transmission

AR = use ase required - = Non illustrrated part

<< RETURN TO GROUP INDEX

Auxiliary Warm Water Heater Service Parts
Figure 24-220

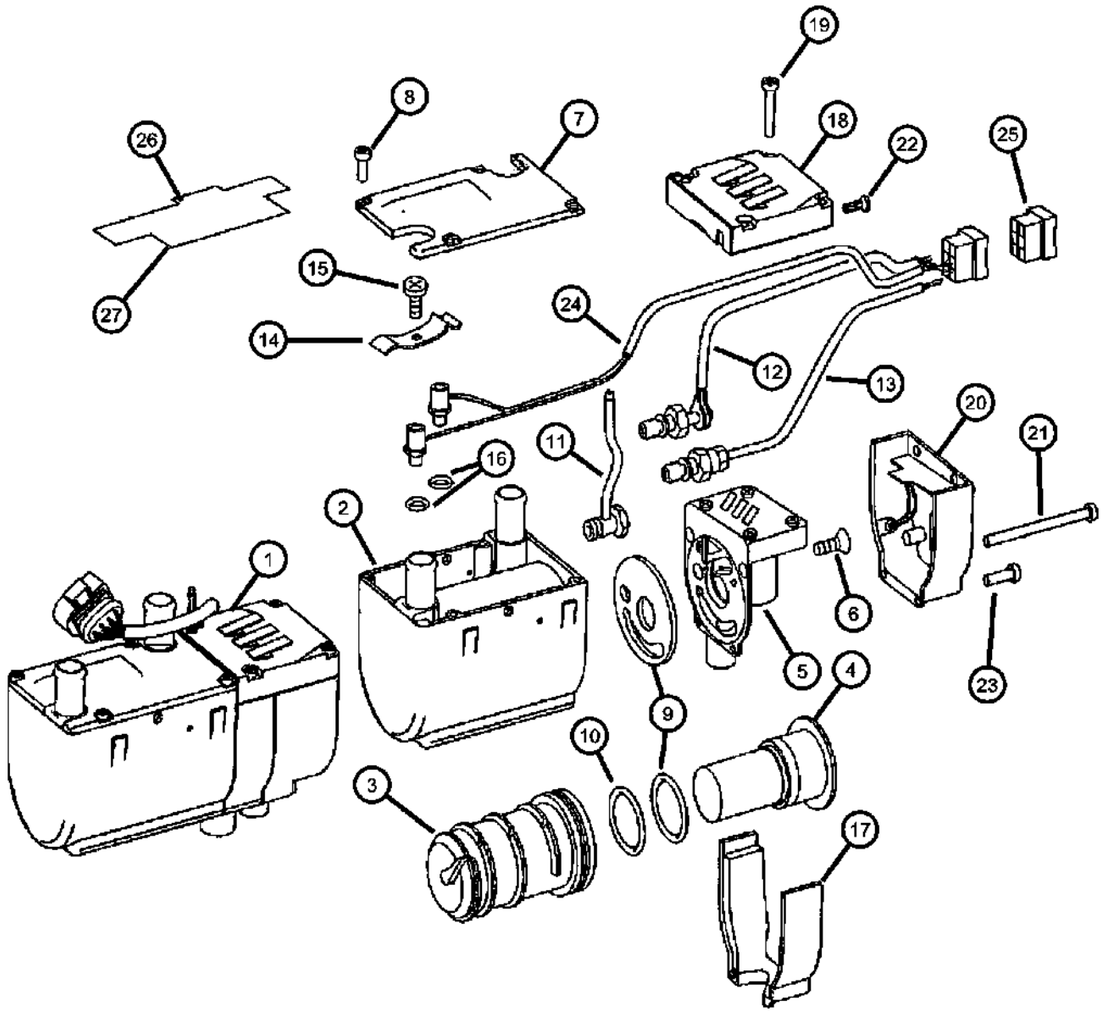

ITEM	PART NUMBER	QTY	LINE	SERIES	BODY	ENGINE	TRANS	TRIM	DESCRIPTION
25	68012843AA	1	2, 3, 6, 7		13, 15, 17, 53, 55	EXM			CONNECTOR
26	68000330AA	1	2, 3, 6, 7			EXM			INSULATION, Insulation For Covering
27	68004346AA	1	2, 3, 6, 7			EXM			INSULATION, NONE, SPRINTER, Isnulation Against Moisture

SPRINTER (VB)

SERIES	LINE	BODY	ENGINE	TRANSMISSION
L = LOWLINE	3 = HD DODGE 2WD 6 = Lt. Duty DODGE 4WD 2 = Med. Duty DODGE 2WD 7 = Med. Duty DODGE 4WD	17 = VAN WHEEL BASE 7 55 = WAGON WHEEL BASE 5 15 = VAN WHEEL BASE 5 53 = 119 WB 13 = 119 WB 05 = CAB CHASSIS WHEEL BASE 5 03 = CAB CHASSIS WHEEL BASE 3	EG2 = 3.5L V6 Gas Engine EXM = 3.0L V6 Turbo Diesel Engine	DGZ = 5-Speed Auto W5A380 Transmission

Heater Lines
Figure 24-225

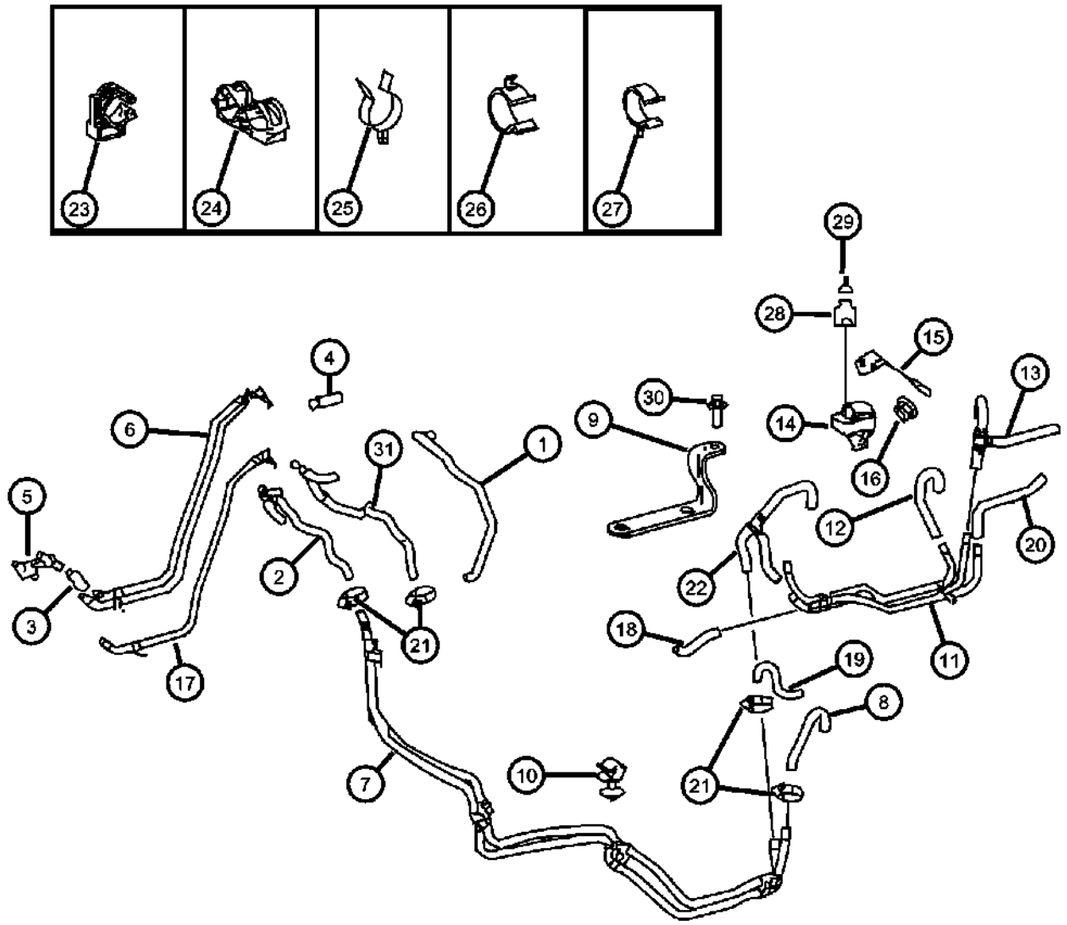

ITEM	PART NUMBER	QTY	LINE	SERIES	BODY	ENGINE	TRANS	TRIM	DESCRIPTION
1									HOSE, Heater Supply
	68012703AA	1	2, 3, 6, 7			EG2			Feed With [HDB Or HAB]
	68012704AA	1	2, 3, 6, 7			EG2			Feed
	68034968AA	1	2, 3, 6, 7		13, 15, 17, 53, 55	EXM			Feed
2									HOSE, Heater Supply
	68012712AA	1	2, 3, 6, 7		13, 15, 17, 53, 55	EG2			With [HDC+HAB]
	68012713AA	1	2, 3, 6, 7			EG2, EXM			
3	68025139AA	1	2, 3, 6, 7			EXM			HOSE
4	68025140AA	1	2, 3, 6, 7			EXM			HOSE
5	68025141AA	1	2, 3, 6, 7			EXM			VALVE, Heater Bypass
6	68025138AA	1	2, 3, 6, 7			EXM			HOSE, Heater
7	68012715AA	1	2, 3, 6, 7			EG2, EXM			HOSE, Heater
8	68012737AA	1	2, 3, 6, 7		13, 15, 17, 53, 55	EG2, EXM			HOSE, Heater, With [XBJ]
9	68012722AA	1	2, 3, 6, 7		13, 15, 17, 53, 55	EG2, EXM			HOSE, Heater, With [XG3 + HDC]
10	05117649AA	1	2, 3, 6, 7			EXM			CLIP, Hose, Hose Holder
11	68012723AA	1	2, 3, 6, 7		13, 15, 17, 53, 55	EG2, EXM			HOSE, Heater, With [XG3 + HDC]
12	68012725AA	1	2, 3, 6, 7		13, 15, 17, 53, 55	EG2, EXM			HOSE, Heater, With [XG3 + HDC]
13	68012727AA	1	2, 3, 6, 7		13, 15, 17, 53, 55	EG2, EXM			HOSE, Heater, With [XG3 + HDC]
14	68012738AA	1	2, 3, 6, 7			EG2, EXM			PUMP, Recirculating
15	68012739AA	1	2, 3, 6, 7			EG2, EXM			BRACKET
16	05096978AA	2	2, 3, 6, 7		13, 15, 17, 53, 55	EG2, EXM			NUT, Hex, M6
17									HOSE, Heater Return
	68012729AA	1	2, 3, 6, 7			EG2, EXM			
	68012733AA	1	2, 3, 6, 7		13, 15, 17, 53, 55	EG2			With [HDC]
18	68012734AA	1	2, 3, 6, 7		13, 15, 17, 53, 55	EG2, EXM			HOSE, Heater Return
19	68012735AA	1	2, 3, 6, 7		13, 15, 17, 53, 55	EG2			HOSE, Heater, With [HDC]
20	68012736AA	1	2, 3, 6, 7		13, 15, 17, 53, 55	EG2, EXM			HOSE, Heater

SPRINTER (VB)

SERIES	LINE	BODY	ENGINE	TRANSMISSION
L = LOWLINE	3 = HD DODGE 2WD 6 = Lt. Duty DODGE 4WD 2 = Med. Duty DODGE 2WD 7 = Med. Duty DODGE 4WD	17 = VAN WHEEL BASE 7 55 = WAGON WHEEL BASE 5 15 = VAN WHEEL BASE 5 53 = 119 WB 13 = 119 WB 05 = CAB CHASSIS WHEEL BASE 5 03 = CAB CHASSIS WHEEL BASE 3	EG2 = 3.5L V6 Gas Engine EXM = 3.0L V6 Turbo Diesel Engine	DGZ = 5-Speed Auto W5A380 Transmission

Heater Lines
Figure 24-225

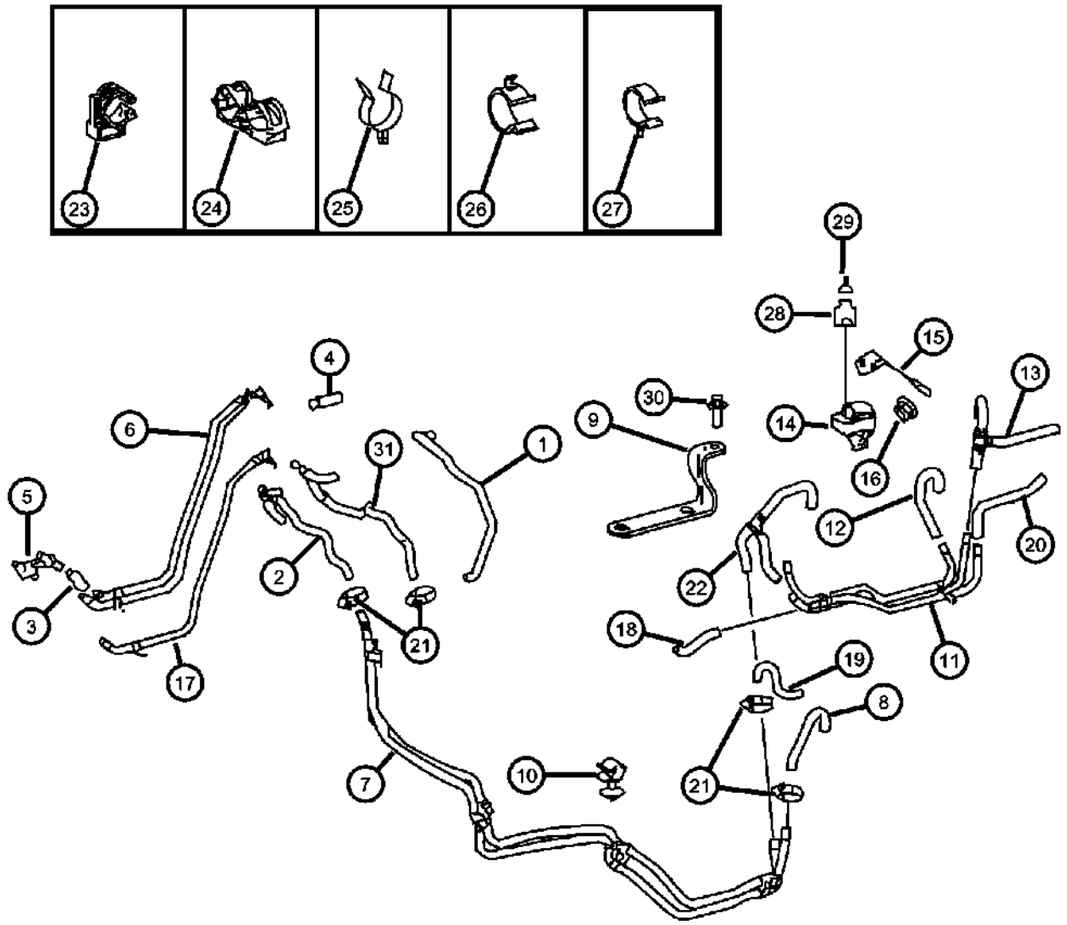

ITEM	PART NUMBER	QTY	LINE	SERIES	BODY	ENGINE	TRANS	TRIM	DESCRIPTION
21	05135881AA	6	2, 3, 6, 7		13, 15, 17, 53, 55	EXM			CLAMP
22	68012404AA	1	2, 3, 6, 7			EXM			BRACKET
23	68012740AA	1	2, 3, 6, 7			EG2, EXM			BRACKET, Hose
24	68012741AA	1	2, 3, 6, 7		13, 15, 17, 53, 55	EG2, EXM			CLAMP, Hose To Body [2 x 23-28 MM]
25	05096566AA	2	2, 3, 6, 7		13, 15, 17, 53, 55	EG2, EXM			CLIP, Hose
26									CLAMP, Hose
	06104923AA	1	2, 3, 6, 7		13, 15, 17, 53, 55	EXM			
		1	2, 6		13, 15, 17, 53, 55	EG2			
27	06104918AA	2	2, 3, 6, 7		13, 15, 17, 53, 55	EG2, EXM			CLAMP, Hose
28	05103931AA	1	2, 3, 6, 7			EG2, EXM			CONNECTOR, Recirculating Pump
29									TERMINAL
	05133353AA	AR	2, 3, 6, 7			EG2			[0.75 - 1.0 MM]
		AR	2, 3, 6, 7			EXM			[0.75 - 1.0 MM]
30									BOLT, 6 Lobe External Head, M6X1.00X16.00
	06104005AA	3	2, 3, 6, 7			EG2			
		1	2, 3, 6, 7			EXM			
31	68012733AA	1	2, 3, 6, 7		13, 15, 17, 53, 55	EG2			HOSE, Heater Return

SPRINTER (VB)

SERIES	LINE	BODY	ENGINE	TRANSMISSION
L = LOWLINE	3 = HD DODGE 2WD 6 = Lt. Duty DODGE 4WD 2 = Med. Duty DODGE 2WD 7 = Med. Duty DODGE 4WD	17 = VAN WHEEL BASE 7 55 = WAGON WHEEL BASE 5 15 = VAN WHEEL BASE 5 53 = 119 WB 13 = 119 WB 05 = CAB CHASSIS WHEEL BASE 5 03 = CAB CHASSIS WHEEL BASE 3	EG2 = 3.5L V6 Gas Engine EXM = 3.0L V6 Turbo Diesel Engine	DGZ = 5-Speed Auto W5A380 Transmission

AR = use ase required - = Non illustrrated part

<< RETURN TO GROUP INDEX

Heater Lines
Figure 24-230

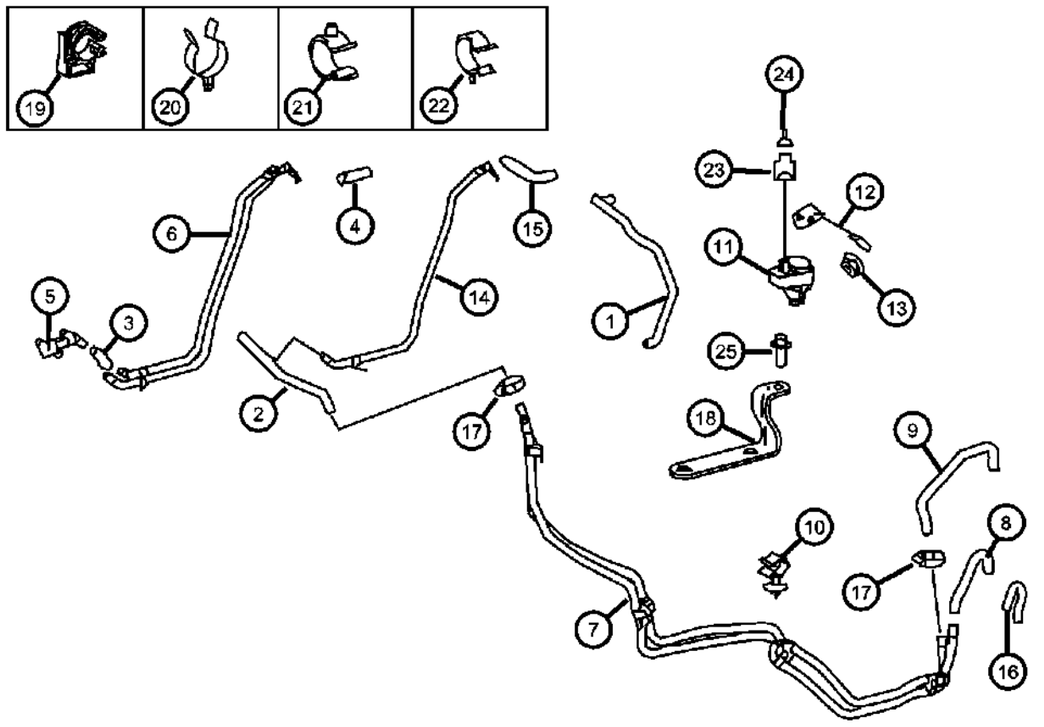

ITEM	PART NUMBER	QTY	LINE	SERIES	BODY	ENGINE	TRANS	TRIM	DESCRIPTION
1									HOSE, Heater Supply
	68012703AA	1	2, 3, 6, 7			EG2			With HDB And Or HAB]
	68012704AA	1	2, 3, 6, 7			EG2			
	68034968AA	1	3, 7		03, 05	EXM			
2	68012713AA	1	2, 3, 6, 7			EG2, EXM			HOSE, Heater Supply
3	68025139AA	1	2, 3, 6, 7			EXM			HOSE
4	68025140AA	1	2, 3, 6, 7			EXM			HOSE
5	68025141AA	1	2, 3, 6, 7			EXM			VALVE, Heater Bypass
6	68025138AA	1	2, 3, 6, 7			EXM			HOSE, Heater
7	68012715AA	1	2, 3, 6, 7			EG2, EXM			HOSE, Heater
8	68012717AA	1	2, 3, 6, 7			EG2, EXM			HOSE, Heater
9	68012718AA	1	2, 3, 6, 7			EG2, EXM			HOSE, Heater
10	68035039AA	1	2, 3, 6, 7			EXM			CLIP, Hose, Hose To Engine
11	68012738AA	1	2, 3, 6, 7			EG2, EXM			PUMP, Recirculating
12	68012739AA	1	2, 3, 6, 7			EG2, EXM			BRACKET
13	06104708AA	1	2, 3, 6, 7			EG2, EXM			NUT, Hex, M6
14	68012729AA	1	2, 3, 6, 7			EG2, EXM			HOSE, Heater Return
15	68012732AA	1	3, 7		03, 05	EG2, EXM			HOSE, Heater Return
16	68012737AA	1	3, 7		03, 05	EG2, EXM			HOSE, Heater
17	05135881AA	2	2, 3, 6, 7			EG2, EXM			CLAMP
18	68012404AA	1	2, 3, 6, 7			EXM			BRACKET
19	68012740AA	1	2, 3, 6, 7			EG2, EXM			BRACKET, Hose
20	05096566AA	1	3, 7		03, 05	EG2, EXM			CLIP, Hose
21									CLAMP, Hose
	06104923AA	1	3, 7		03, 05	EXM			
		1	3, 7		03, 05	EG2			
22	06104918AA	1	3, 7		03, 05	EG2			CLAMP, Hose
23	05103931AA	1	2, 3, 6, 7			EG2, EXM			CONNECTOR, Recirculating Pump
24									TERMINAL
	05133353AA	AR	2, 3, 6, 7			EG2			[0.75 - 1.0 MM]
		AR	2, 3, 6, 7			EXM			[0.75 - 1.0 MM]
25									BOLT, 6 Lobe External Head, M6X1.00X16.00

SPRINTER (VB)

SERIES	LINE	BODY	ENGINE	TRANSMISSION
L = LOWLINE	3 = HD DODGE 2WD 6 = Lt. Duty DODGE 4WD 2 = Med. Duty DODGE 2WD 7 = Med. Duty DODGE 4WD	17 = VAN WHEEL BASE 7 55 = WAGON WHEEL BASE 5 15 = VAN WHEEL BASE 5 53 = 119 WB 13 = 119 WB 05 = CAB CHASSIS WHEEL BASE 5 03 = CAB CHASSIS WHEEL BASE 3	EG2 = 3.5L V6 Gas Engine EXM = 3.0L V6 Turbo Diesel Engine	DGZ = 5-Speed Auto W5A380 Transmission

Heater Lines
Figure 24-230

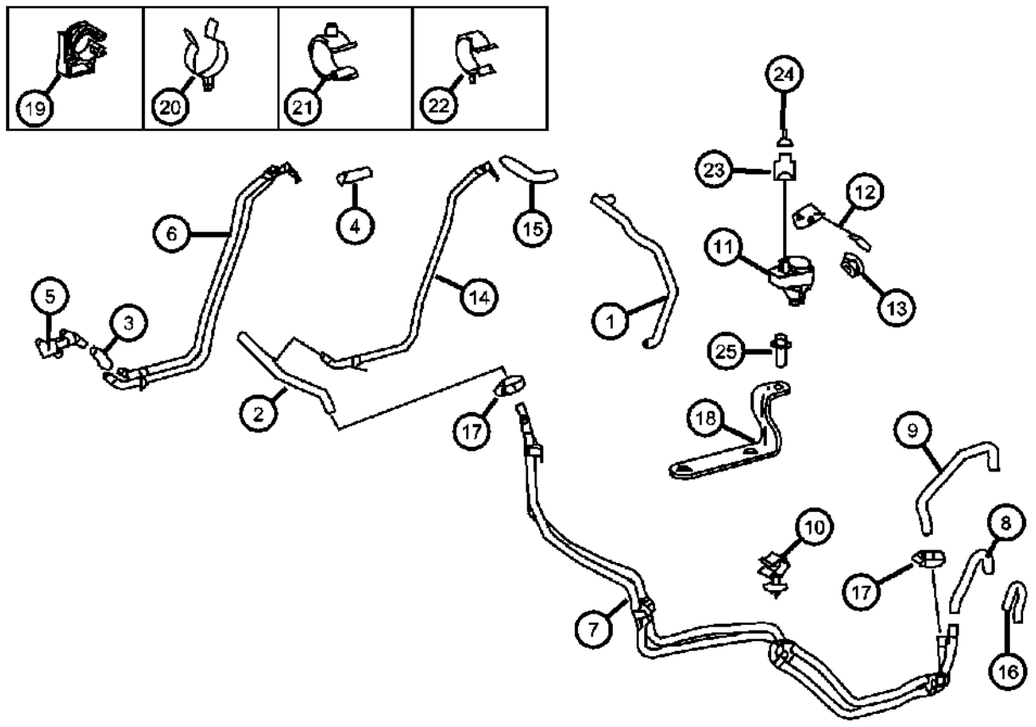

ITEM	PART NUMBER	QTY	LINE	SERIES	BODY	ENGINE	TRANS	TRIM	DESCRIPTION
	06104005AA	3	2, 3, 6, 7			EG2			
		1	2, 3, 6, 7			EXM			

SPRINTER (VB)

SERIES	LINE	BODY	ENGINE	TRANSMISSION
L = LOWLINE	3 = HD DODGE 2WD 6 = Lt. Duty DODGE 4WD 2 = Med. Duty DODGE 2WD 7 = Med. Duty DODGE 4WD	17 = VAN WHEEL BASE 7 55 = WAGON WHEEL BASE 5 15 = VAN WHEEL BASE 5 53 = 119 WB 13 = 119 WB 05 = CAB CHASSIS WHEEL BASE 5 03 = CAB CHASSIS WHEEL BASE 3	EG2 = 3.5L V6 Gas Engine EXM = 3.0L V6 Turbo Diesel Engine	DGZ = 5-Speed Auto W5A380 Transmission

Refrigerant Lines
Figure 24-235

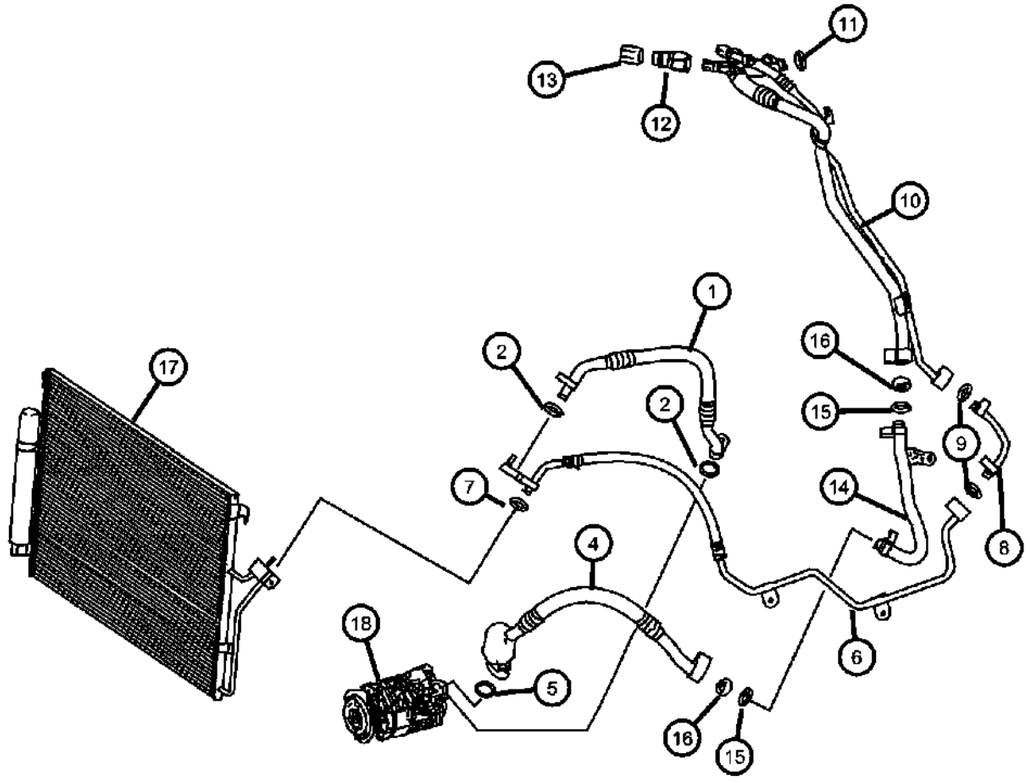

ITEM	PART NUMBER	QTY	LINE	SERIES	BODY	ENGINE	TRANS	TRIM	DESCRIPTION
1									LINE, A/C
	68012744AA	1	2, 3, 6, 7			EXM			To [A/C] Compressor
	68012745AA	1	2, 3, 6, 7			EG2			To [A/C] Compressor
2	05103571AA	1	2, 3, 6, 7			EG2, EXM			O RING, Air Conditioning Line, [9.5 x 2.5 MM]
-3	05098972AA	1	3, 7		03, 05	EXM			O RING, A/C Line, [14 x 2 MM]
4									LINE, A/C Suction
	68012754AA	1	2, 3, 6, 7			EXM			
	68012755AA	1	2, 3, 6, 7			EG2			
5									O RING, A/C Line
	05103936AA	1	3, 7		03, 05	EG2			[23.8 x 2.4 MM]
		1	3, 7		03, 05	EXM			[23.8 x 2.4 MM]
6	68012761AA	1	2, 3, 6, 7			EG2, EXM			LINE, A/C Liquid
7	05103571AA	1	2, 3, 6, 7			EG2, EXM			O RING, Air Conditioning Line, [9.5 x 2.5 MM]
8	68012764AA	1	2, 3, 6, 7			EG2, EXM			LINE, A/C
9	05103571AA	1	2, 3, 6, 7			EG2, EXM			O RING, Air Conditioning Line, [9.5 x 2.5 MM]
10	68012765AA	1	2, 3, 6, 7			EG2, EXM			LINE, A/C Suction & Discharge
11	05098972AA	1	3, 7		03, 05	EG2, EXM			O RING, A/C Line, [14 x 2 MM]
12	05098396AB	1	3, 7		03, 05	EG2, EXM			VALVE, Charging
13	05134029AA	1	3, 7		03, 05	EG2, EXM			CAP, A/C Charge Valve
14	68012773AA	1	2, 3, 6, 7			EG2, EXM			LINE, A/C
15	05138942AA	2	3, 7		03, 05	EG2, EXM			O RING, [13.7 X 2.5 MM]
16	05159481AA	2	3, 7		03, 05	EG2, EXM			GUIDE
17	68013633AA	1	2, 3, 6, 7			EG2, EXM			CONDENSER, A/C
18									COMPRESSOR, Air Conditioning
	68006192AA	1	2, 3, 6, 7			EG2			
	68012247AA	1	2, 3, 6, 7			EXM			

SPRINTER (VB)

SERIES	LINE	BODY	ENGINE	TRANSMISSION
L = LOWLINE	3 = HD DODGE 2WD 6 = Lt. Duty DODGE 4WD 2 = Med. Duty DODGE 2WD 7 = Med. Duty DODGE 4WD	17 = VAN WHEEL BASE 7 55 = WAGON WHEEL BASE 5 15 = VAN WHEEL BASE 5 53 = 119 WB 13 = 119 WB 05 = CAB CHASSIS WHEEL BASE 5 03 = CAB CHASSIS WHEEL BASE 3	EG2 = 3.5L V6 Gas Engine EXM = 3.0L V6 Turbo Diesel Engine	DGZ = 5-Speed Auto W5A380 Transmission

Refrigerant Lines
Figure 24-240

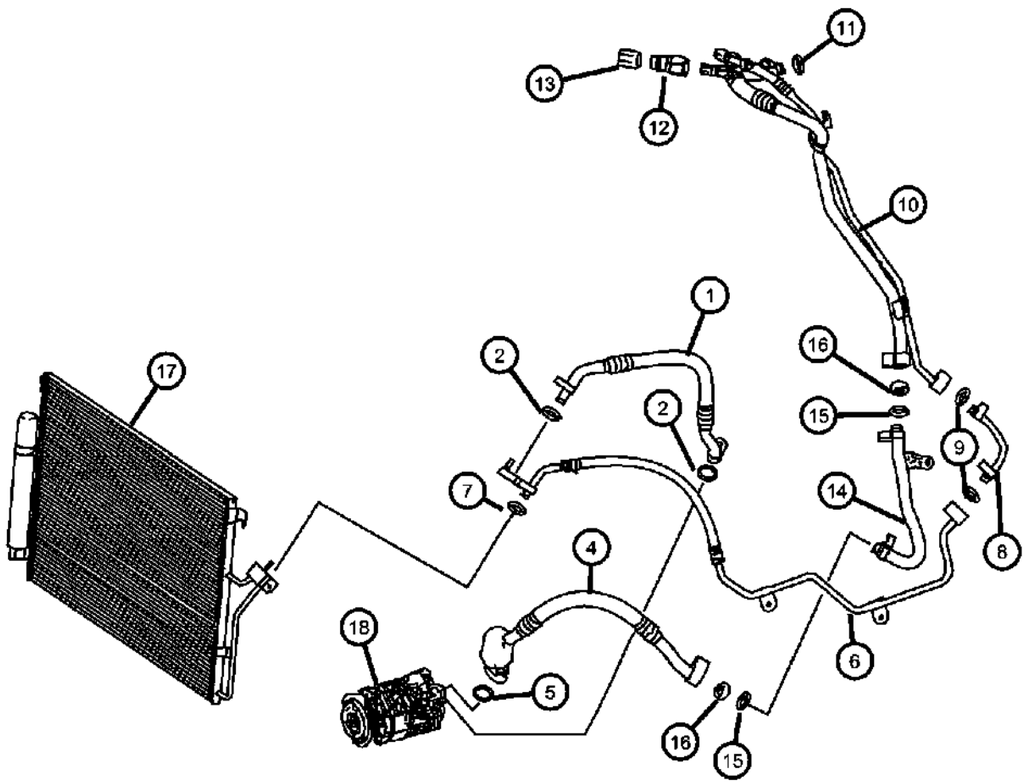

ITEM	PART NUMBER	QTY	LINE	SERIES	BODY	ENGINE	TRANS	TRIM	DESCRIPTION
1									LINE, A/C
	68012744AA	1	2, 3, 6, 7			EXM			To [A/C] Compressor
	68012745AA	1	2, 3, 6, 7			EG2			To [A/C] Compressor
2	05103571AA	1	2, 3, 6, 7			EG2, EXM			O RING, Air Conditioning Line, [9.5 x 2.5 MM]
-3	05098972AA	1	2, 3, 6, 7		13, 15, 17, 53, 55	EG2, EXM			O RING, A/C Line, [14 x 2 MM]
4									LINE, A/C Suction
	68012754AA	1	2, 3, 6, 7			EXM			
	68012755AA	1	2, 3, 6, 7			EG2			
5	05103936AA	1	2, 3, 6, 7		13, 15, 17, 53, 55	EXM			O RING, A/C Line, [23.8 x 2.4 MM]
6	68012761AA	1	2, 3, 6, 7			EG2, EXM			LINE, A/C Liquid
7	05103571AA	1	2, 3, 6, 7			EG2, EXM			O RING, Air Conditioning Line, [9.5 x 2.5 MM]
8	68012764AA	1	2, 3, 6, 7			EG2, EXM			LINE, A/C
9	05103571AA	1	2, 3, 6, 7			EG2, EXM			O RING, Air Conditioning Line, [9.5 x 2.5 MM]
10	68012765AA	1	2, 3, 6, 7			EG2, EXM			LINE, A/C Suction & Discharge
11	05098972AA	1	2, 3, 6, 7		13, 15, 17, 53, 55	EG2, EXM			O RING, A/C Line, [14 x 2 MM]
12	05098396AB	1	2, 3, 6, 7		13, 15, 17, 53, 55	EG2, EXM			VALVE, Charging
13	05134029AA	1	2, 3, 6, 7		13, 15, 17, 53, 55	EG2, EXM			CAP, A/C Charge Valve
14	68012773AA	1	2, 3, 6, 7			EG2, EXM			LINE, A/C
15	05138942AA	1	2, 3, 6, 7		13, 15, 17, 53, 55	EG2, EXM			O RING, [13.7 X 2.5 MM]
16	05159481AA	2	2, 3, 6, 7		13, 15, 17, 53, 55	EG2, EXM			GUIDE
17	68013633AA	1	2, 3, 6, 7			EG2, EXM			CONDENSER, A/C
18									COMPRESSOR, Air Conditioning
	68006192AA	1	2, 3, 6, 7			EG2			
	68012247AA	1	2, 3, 6, 7			EXM			

SPRINTER (VB)

SERIES	LINE	BODY	ENGINE	TRANSMISSION
L = LOWLINE	3 = HD DODGE 2WD 6 = Lt. Duty DODGE 4WD 2 = Med. Duty DODGE 2WD 7 = Med. Duty DODGE 4WD	17 = VAN WHEEL BASE 7 55 = WAGON WHEEL BASE 5 15 = VAN WHEEL BASE 5 53 = 119 WB 13 = 119 WB 05 = CAB CHASSIS WHEEL BASE 5 03 = CAB CHASSIS WHEEL BASE 3	EG2 = 3.5L V6 Gas Engine EXM = 3.0L V6 Turbo Diesel Engine	DGZ = 5-Speed Auto W5A380 Transmission

Refrigerant Line Routing
Figure 24-245

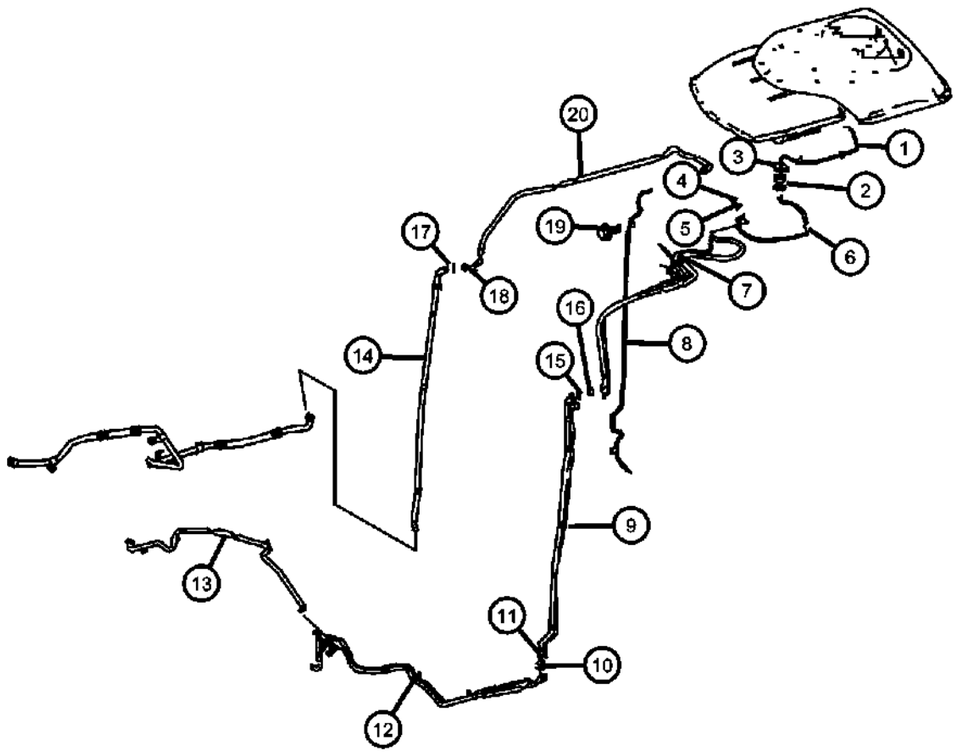

ITEM	PART NUMBER	QTY	LINE	SERIES	BODY	ENGINE	TRANS	TRIM	DESCRIPTION
1	68012779AA	1	2, 6		53, 55	EG2, EXM			LINE, A/C
2	68012780AA	1	2, 6		53, 55	EG2, EXM			GUIDE
3	05103571AA	1	2, 3, 6, 7			EG2, EXM			O RING, Air Conditioning Line
4									GUIDE
	68012782AA	2	2, 6		53, 55	EG2, EXM			
		1	2, 3, 6, 7		13, 15, 17, 53, 55	EG2, EXM			
5	05098970AA	1	2, 3, 6, 7		13, 15, 17, 53, 55	EG2, EXM			O RING, A/C Line
6	68012784AA	1	2, 6		53, 55	EG2, EXM			LINE, A/C
7									LINE, A/C
	68012772AA	1	2, 6		53, 55	EG2, EXM			
	68012775AA	1	2, 6		53, 55	EG2, EXM			With [HBD+MWJ]
8	68009179AA	1	2, 6		53, 55	EG2, EXM			LINE, A/C
9	68012774AA	1	2, 6		53, 55	EG2, EXM			LINE, A/C
10	05138942AA	3	2, 3, 6, 7		13, 15, 17, 53, 55	EG2, EXM			O RING
11	05159481AA	2	2, 3, 6, 7		13, 15, 17, 53, 55	EG2, EXM			GUIDE
12	68012777AA	1	2, 6		53, 55	EG2, EXM			LINE, A/C
13	68012778AA	1	2, 6		53, 55	EG2, EXM			LINE, A/C
14	68012770AA	1	2, 6		53, 55	EG2, EXM			LINE, A/C
15	05098970AA	1	2, 3, 6, 7		13, 15, 17, 53, 55	EG2, EXM			O RING, A/C Line
16	05159481AA	1	2, 3, 6, 7		13, 15, 17, 53, 55	EG2, EXM			GUIDE
17	05138942AA	2	2, 3, 6, 7		13, 15, 17, 53, 55	EG2, EXM			O RING
18	05159481AA	2	2, 3, 6, 7		13, 15, 17, 53, 55	EG2, EXM			GUIDE
19	06104117AA	6	2, 3, 6, 7		17	EG2, EXM			SCREW, Hex Head, M5x16
20	68012771AA	1	2, 6		53, 55	EG2, EXM			LINE, A/C

SPRINTER (VB)

SERIES	LINE	BODY	ENGINE	TRANSMISSION
L = LOWLINE	3 = HD DODGE 2WD 6 = Lt. Duty DODGE 4WD 2 = Med. Duty DODGE 2WD 7 = Med. Duty DODGE 4WD	17 = VAN WHEEL BASE 7 55 = WAGON WHEEL BASE 5 15 = VAN WHEEL BASE 5 53 = 119 WB 13 = 119 WB 05 = CAB CHASSIS WHEEL BASE 5 03 = CAB CHASSIS WHEEL BASE 3	EG2 = 3.5L V6 Gas Engine EXM = 3.0L V6 Turbo Diesel Engine	DGZ = 5-Speed Auto W5A380 Transmission

Refrigerant Lines
Figure 24-250

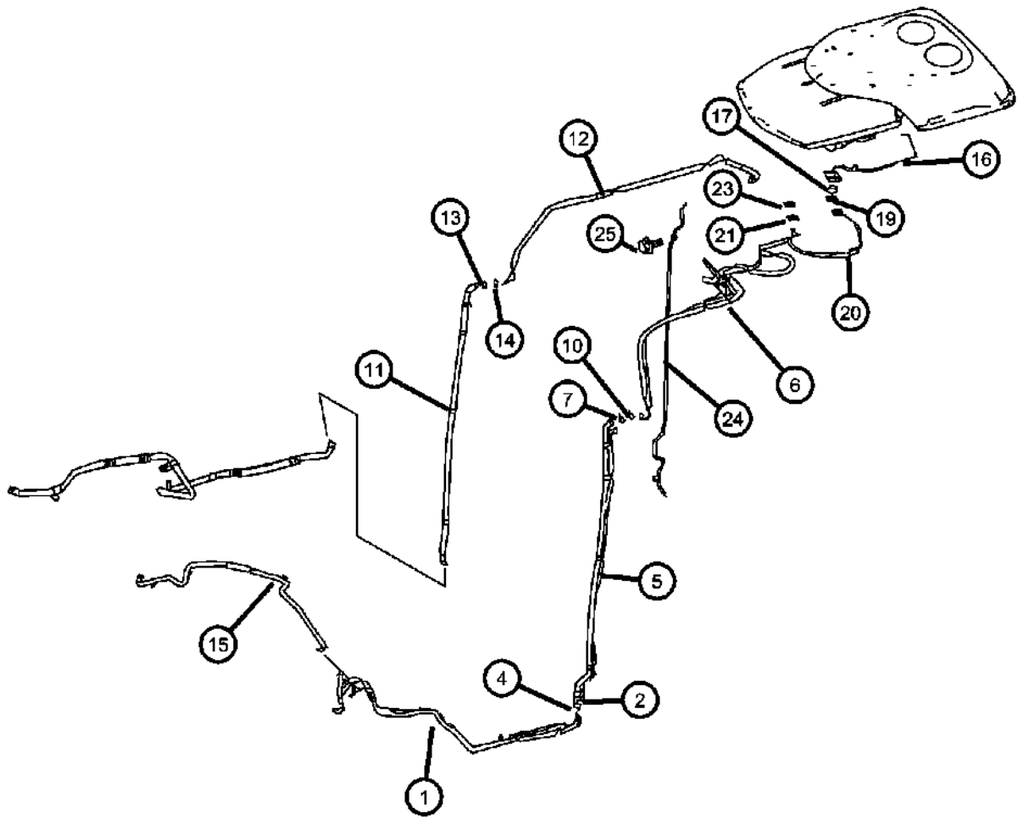

ITEM	PART NUMBER	QTY	LINE	SERIES	BODY	ENGINE	TRANS	TRIM	DESCRIPTION
1	68012777AA	1	2, 6		53, 55	EG2, EXM			LINE, A/C, With [HBD]
2	05138942AA	3	2, 3, 6, 7		13, 15, 17, 53, 55	EG2, EXM			O RING, [13.7 x 2.5 MM]
-3	05103571AA	1	2, 3, 6, 7		53, 55	EG2, EXM			O RING, Air Conditioning Line, [9.5 x 2.5 MM]
4	05159481AA	2	2, 3, 6, 7		13, 15, 17, 53, 55	EG2, EXM			GUIDE
5	68012774AA	1	2, 6		53, 55	EG2, EXM			LINE, A/C
6									LINE, A/C
	68012775AA	1	2, 6		53, 55	EG2, EXM			[HBD+MWJ]
	68012776AA	1	2, 6		53, 55	EG2, EXM			
7	05138942AA	1	2, 3, 6, 7		13, 15, 17, 53, 55	EG2, EXM			O RING, [13.7 x 2.5 MM]
-8									O RING, A/C Line
	05098970AA	1	2, 3, 6, 7		13, 15, 17, 53, 55	EG2, EXM			[7.5 x 2 MM]
	05098972AA	1	2, 3, 6, 7		13, 15, 17, 53, 55	EG2, EXM			[14 x 2 MM]
-9	05103571AA	1	2, 3, 6, 7			EG2, EXM			O RING, Air Conditioning Line, [9.5 x 2.5 MM]
10	05159481AA	1	2, 3, 6, 7		13, 15, 17, 53, 55	EG2, EXM			GUIDE
11	68012770AA	1	2, 6		53, 55	EG2, EXM			LINE, A/C
12									LINE, A/C
	68012771AA	1	2, 6		53, 55	EG2, EXM			With [HBD+MWJ]
	68012772AA	1	2, 6		53, 55	EG2, EXM			
13	05138942AA	1	2, 3, 6, 7		13, 15, 17, 53, 55	EG2, EXM			O RING, [13.7 X 2.5 MM]
14	05159481AA	2	2, 3, 6, 7		13, 15, 17, 53, 55	EG2, EXM			GUIDE
15	68012778AA	1	2, 6		53, 55	EG2, EXM			LINE, A/C
16									LINE, A/C
	68012779AA	1	2, 6		53, 55	EG2, EXM			From Roof Opening To Condenser
	68012781AA	1	2, 6		53, 55	EG2, EXM			From Drier To Roof Opening
17	05138942AA	1	2, 3, 6, 7		13, 15, 17, 53, 55	EG2, EXM			O RING, [13.7 x 2.5 MM]
-18	05103571AA	1	2, 3, 6, 7		53, 55	EG2, EXM			O RING, Air Conditioning Line, [9.5 x 2.5MM]
19									GUIDE

SPRINTER (VB)

SERIES	LINE	BODY	ENGINE	TRANSMISSION
L = LOWLINE	3 = HD DODGE 2WD 6 = Lt. Duty DODGE 4WD 2 = Med. Duty DODGE 2WD 7 = Med. Duty DODGE 4WD	17 = VAN WHEEL BASE 7 55 = WAGON WHEEL BASE 5 15 = VAN WHEEL BASE 5 53 = 119 WB 13 = 119 WB 05 = CAB CHASSIS WHEEL BASE 5 03 = CAB CHASSIS WHEEL BASE 3	EG2 = 3.5L V6 Gas Engine EXM = 3.0L V6 Turbo Diesel Engine	DGZ = 5-Speed Auto W5A380 Transmission

Refrigerant Lines
Figure 24-250

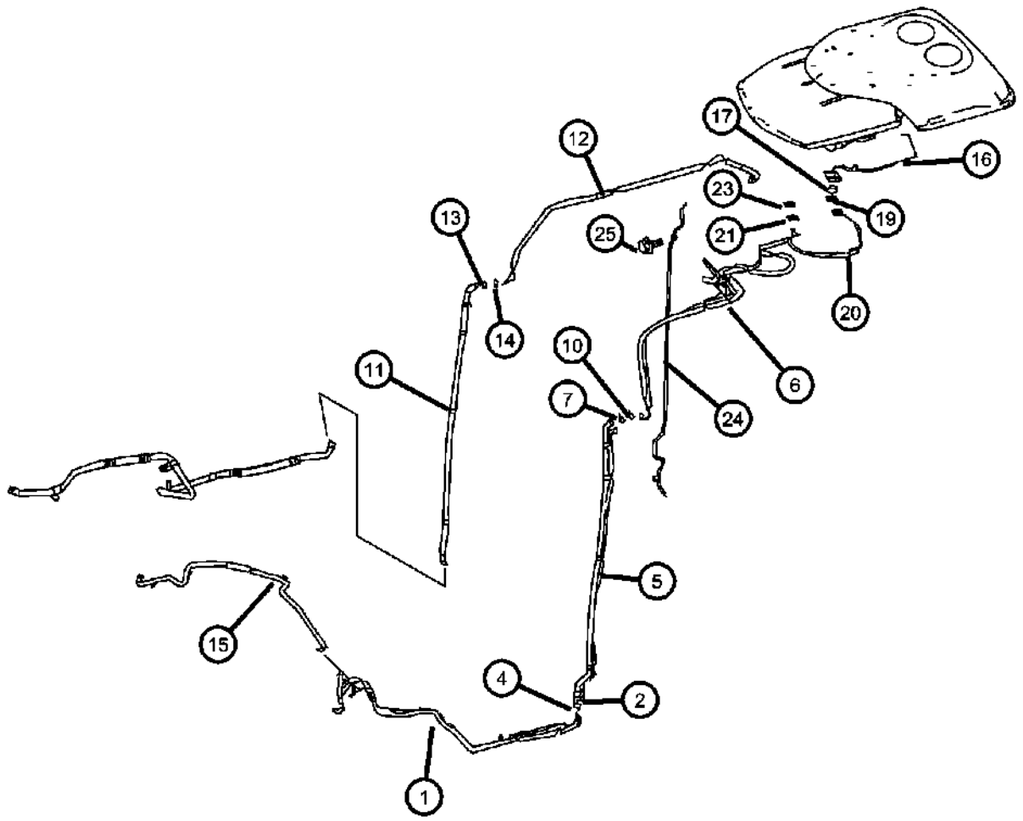

ITEM	PART NUMBER	QTY	LINE	SERIES	BODY	ENGINE	TRANS	TRIM	DESCRIPTION
	68012780AA	1	2, 6		53, 55	EG2, EXM			
	68012782AA	1	2, 3, 6, 7		13, 15, 17, 53, 55	EG2, EXM			Return
20									LINE, A/C
	68012783AA	1	2, 6		53, 55	EG2, EXM			With [HBD+MWJ]
	68012784AA	1	2, 6		53, 55	EG2, EXM			
21	05098970AA	1	2, 3, 6, 7		13, 15, 17, 53, 55	EG2, EXM			O RING, A/C Line, [7.5 x 2 MM]
-22	05103571AA	1	2, 3, 6, 7		53, 55	EG2, EXM			O RING, Air Conditioning Line, [9.5 x 2.5 MM]
23	68012782AA	1	2, 3, 6, 7		13, 15, 17, 53, 55	EG2, EXM			GUIDE
24	68009179AA	1	2, 6		53, 55	EG2, EXM			LINE, A/C
25	06104117AA	6	2, 3, 6, 7		13, 15, 17, 53, 55	EG2, EXM			SCREW, Hex Head, [M5 x 16 MM]

SPRINTER (VB)

SERIES	LINE	BODY	ENGINE	TRANSMISSION
L = LOWLINE	3 = HD DODGE 2WD 6 = Lt. Duty DODGE 4WD 2 = Med. Duty DODGE 2WD 7 = Med. Duty DODGE 4WD	17 = VAN WHEEL BASE 7 55 = WAGON WHEEL BASE 5 15 = VAN WHEEL BASE 5 53 = 119 WB 13 = 119 WB 05 = CAB CHASSIS WHEEL BASE 5 03 = CAB CHASSIS WHEEL BASE 3	EG2 = 3.5L V6 Gas Engine EXM = 3.0L V6 Turbo Diesel Engine	DGZ = 5-Speed Auto W5A380 Transmission

Heater Controls
Figure 24-305

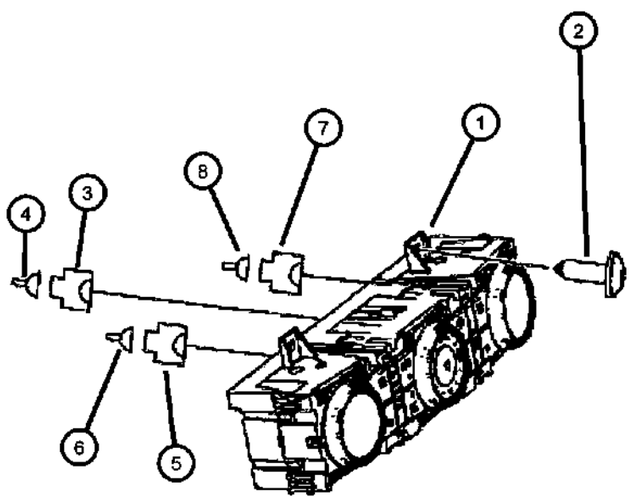

ITEM	PART NUMBER	QTY	LINE	SERIES	BODY	ENGINE	TRANS	TRIM	DESCRIPTION
NOTE: Sales Code: [DGZ]=5 Speed Automatic Transmission [EGM]=3.0L V-6 Turbo Diesel Engine [Mercedes Benz] [EG2]=3.5L V-6 Gas Engine [Mercedes Benz]									
1									CONTROL, A/C And Heater
	68012690AA	1	2, 3, 6, 7			EG2, EXM			With [HAB + HDC And / Or HBD]
	68012691AA	1	2, 3, 6, 7			EG2, EXM			With [HAB]
2	06104574AA	4	2, 3, 6, 7			EG2, EXM			SCREW, Tapping
3									CONNECTOR
	05120782AA	1	2, 3, 6, 7			EG2, EXM			[8 - Pin / S-98]
	68011209AA	1	2, 3, 6, 7			EG2, EXM			[28 - Pin / S98]
	68016738AA	1	2, 3, 6, 7			EG2, EXM			[S 98] Cover
	68016753AA	1	2, 3, 6, 7			EG2, EXM			[12 - Pin / S98]
4									TERMINAL
	05103873AA	3	3, 7		03, 05	EG2, EXM			[0.75 MM2 / MQS:S98]
		3	2, 3, 6, 7		13, 15, 17, 53, 55	EG2, EXM			[0.75 MM2 / MQS:S98]
5	68016755AA	1	2, 3, 6, 7			EG2, EXM			CONNECTOR, Wiring, [8 - Pin / S98]
6	05136771AA	AR	2, 3, 6, 7			EG2, EXM			WIRING PACKAGE, Terminal Repair, [0.5 MM2 / MSQ:S98]
7	68011345AA	1	2, 3, 6, 7			EG2, EXM			CONNECTOR, Wiring, [S98]
8	68011410AA	AR	2, 3, 6, 7			EG2, EXM			TERMINAL, [S98]

SPRINTER (VB)

SERIES	LINE	BODY	ENGINE	TRANSMISSION
L = LOWLINE	3 = HD DODGE 2WD 6 = Lt. Duty DODGE 4WD 2 = Med. Duty DODGE 2WD 7 = Med. Duty DODGE 4WD	17 = VAN WHEEL BASE 7 55 = WAGON WHEEL BASE 5 15 = VAN WHEEL BASE 5 53 = 119 WB 13 = 119 WB 05 = CAB CHASSIS WHEEL BASE 5 03 = CAB CHASSIS WHEEL BASE 3	EG2 = 3.5L V6 Gas Engine EXM = 3.0L V6 Turbo Diesel Engine	DGZ = 5-Speed Auto W5A380 Transmission

A/C and Heater Controls
Figure 24-310

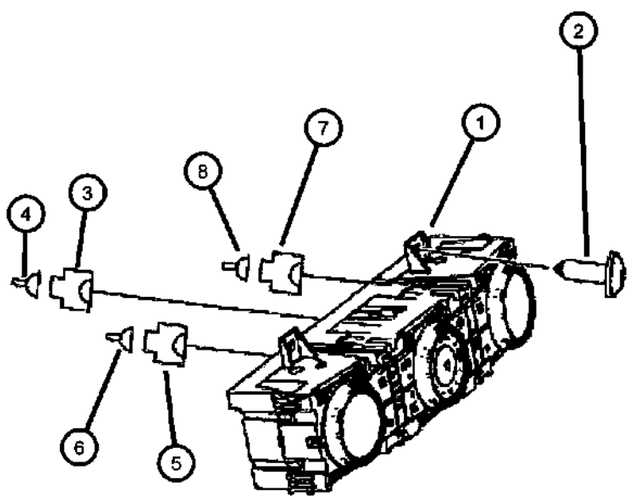

ITEM	PART NUMBER	QTY	LINE	SERIES	BODY	ENGINE	TRANS	TRIM	DESCRIPTION
NOTE: Sales Code: [DGZ]=5 Speed Automatic Transmission [EGM]=3.0L V-6 Turbo Diesel Engine [Mercedes Benz] [EG2]=3.5L V-6 Gas Engine [Mercedes Benz]									
1									CONTROL, A/C And Heater
	68012690AA	1	2, 3, 6, 7			EG2, EXM			With [HAB + HDC And / Or HBD]
	68012691AA	1	2, 3, 6, 7			EG2, EXM			With [HAB]
2	06104574AA	4	2, 3, 6, 7			EG2, EXM			SCREW, Tapping
3									CONNECTOR
	68016738AA	1	2, 3, 6, 7			EG2, EXM			[S 98] Cover
	68016753AA	1	2, 3, 6, 7			EG2, EXM			[12 - Pin / S98]
	05120782AA	1	2, 3, 6, 7			EG2, EXM			[8 - Pin / S-98]
	68011209AA	1	2, 3, 6, 7			EG2, EXM			[28 - Pin / S98]
4									TERMINAL
	05103873AA	3	3, 7		03, 05	EG2, EXM			[0.75 MM2 / MQS:S98]
		3	2, 3, 6, 7		13, 15, 17, 53, 55	EG2, EXM			[0.75 MM2 / MQS:S98]
5	68016755AA	1	2, 3, 6, 7			EG2, EXM			CONNECTOR, Wiring, [8 - Pin / S98]
6	05136771AA	AR	2, 3, 6, 7			EG2, EXM			WIRING PACKAGE, Terminal Repair, [0.5 MM2 / MSQ:S98]
7	68011345AA	1	2, 3, 6, 7			EG2, EXM			CONNECTOR, Wiring, [S98]
8	68011410AA	AR	2, 3, 6, 7			EG2, EXM			TERMINAL, [S98]

SPRINTER (VB)

SERIES	LINE	BODY	ENGINE	TRANSMISSION
L = LOWLINE	3 = HD DODGE 2WD 6 = Lt. Duty DODGE 4WD 2 = Med. Duty DODGE 2WD 7 = Med. Duty DODGE 4WD	17 = VAN WHEEL BASE 7 55 = WAGON WHEEL BASE 5 15 = VAN WHEEL BASE 5 53 = 119 WB 13 = 119 WB 05 = CAB CHASSIS WHEEL BASE 5 03 = CAB CHASSIS WHEEL BASE 3	EG2 = 3.5L V6 Gas Engine EXM = 3.0L V6 Turbo Diesel Engine	DGZ = 5-Speed Auto W5A380 Transmission

A/C Compressor
Figure 24-405

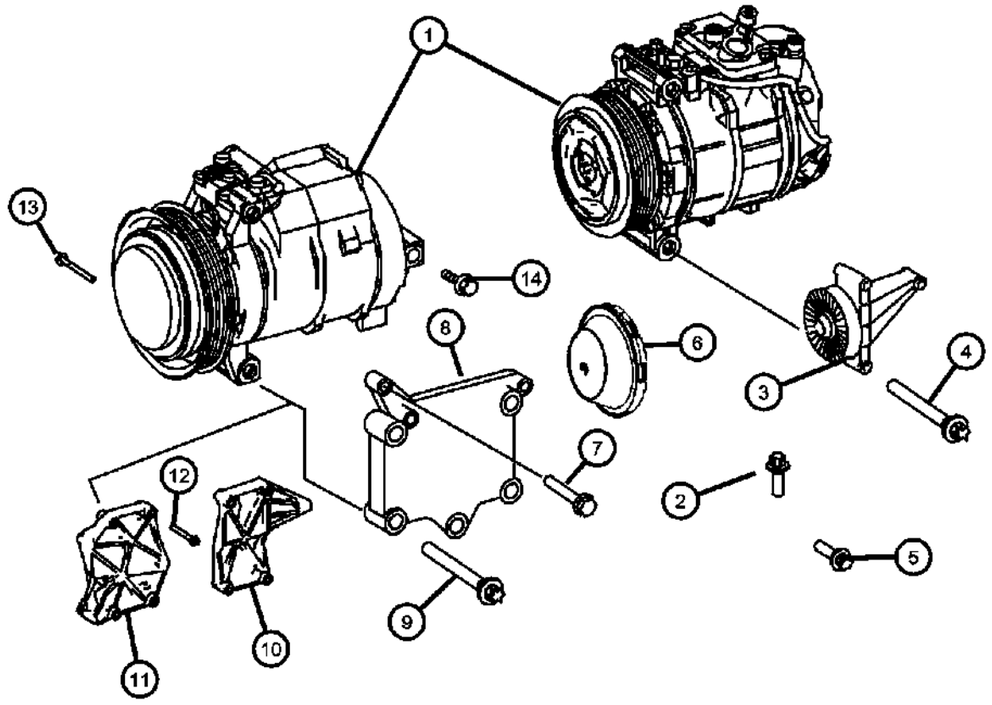

ITEM	PART NUMBER	QTY	LINE	SERIES	BODY	ENGINE	TRANS	TRIM	DESCRIPTION
1									COMPRESSOR, Air Conditioning
	68006192AA	1	2, 3, 6, 7			EG2			[HAB] Air Conditioning with Auto Temp
	68006194AA	1	2, 3, 6, 7			EG2			[HBD] Rear Heavy Duty Air Conditioning
	68012247AA	1	2, 3, 6, 7			EXM			[HAB] Air Conditioning with Auto Temp
	68012250AA	1	2, 6		53, 55	EXM			[HBD] Rear Heavy Duty Air Conditioning
2									BOLT, Hex Flange Head, M8x1.25x30
	06104025AA	1	2, 3, 6, 7		13, 15, 17, 53, 55	EG2, EXM			
		1	3, 7		03, 05	EG2, EXM			
3	05117673AA	1	2, 3, 6, 7			EG2			PULLEY, Tensioner, With Guide Pulley
4									BOLT, Hex Flange Head, M8X1.25X90.00
	06104035AA	2	3, 7		03, 05	EG2			
		2	2, 6		13, 15, 17, 53, 55	EG2			
5	06104025AA	2	2, 3, 6, 7			EG2			BOLT, Hex Flange Head, M8x1.25x30
6	05125553AA	1	2, 3, 6, 7			EG2			CAP, Screw Cover
7	05102611AA	2	2, 3, 6, 7			EG2			SCREW, M8x50
8	06104035AA	1	2, 3, 6, 7			EG2			BOLT, Hex Flange Head, M8X1.25X90.00
9	06104035AA	2	2, 3, 6, 7			EG2			BOLT, Hex Flange Head, M8X1.25X90.00
10	68012249AA	1	2, 3, 6, 7			EXM			BRACKET
11	68012248AA	1	2, 3, 6, 7			EXM			BRACKET
12	06104032AA	4	2, 3, 6, 7			EXM			SCREW, M8x65
13	06104035AA	4	2, 3, 6, 7			EXM			BOLT, Hex Flange Head, M8X1.25X90.00
14	06104035AA	4	2, 3, 6, 7			EXM			BOLT, Hex Flange Head, M8X1.25X90.00

SPRINTER (VB)

SERIES	LINE	BODY	ENGINE	TRANSMISSION
L = LOWLINE	3 = HD DODGE 2WD 6 = Lt. Duty DODGE 4WD 2 = Med. Duty DODGE 2WD 7 = Med. Duty DODGE 4WD	17 = VAN WHEEL BASE 7 55 = WAGON WHEEL BASE 5 15 = VAN WHEEL BASE 5 53 = 119 WB 13 = 119 WB 05 = CAB CHASSIS WHEEL BASE 5 03 = CAB CHASSIS WHEEL BASE 3	EG2 = 3.5L V6 Gas Engine EXM = 3.0L V6 Turbo Diesel Engine	DGZ = 5-Speed Auto W5A380 Transmission

Air Ducting
Figure 24-505

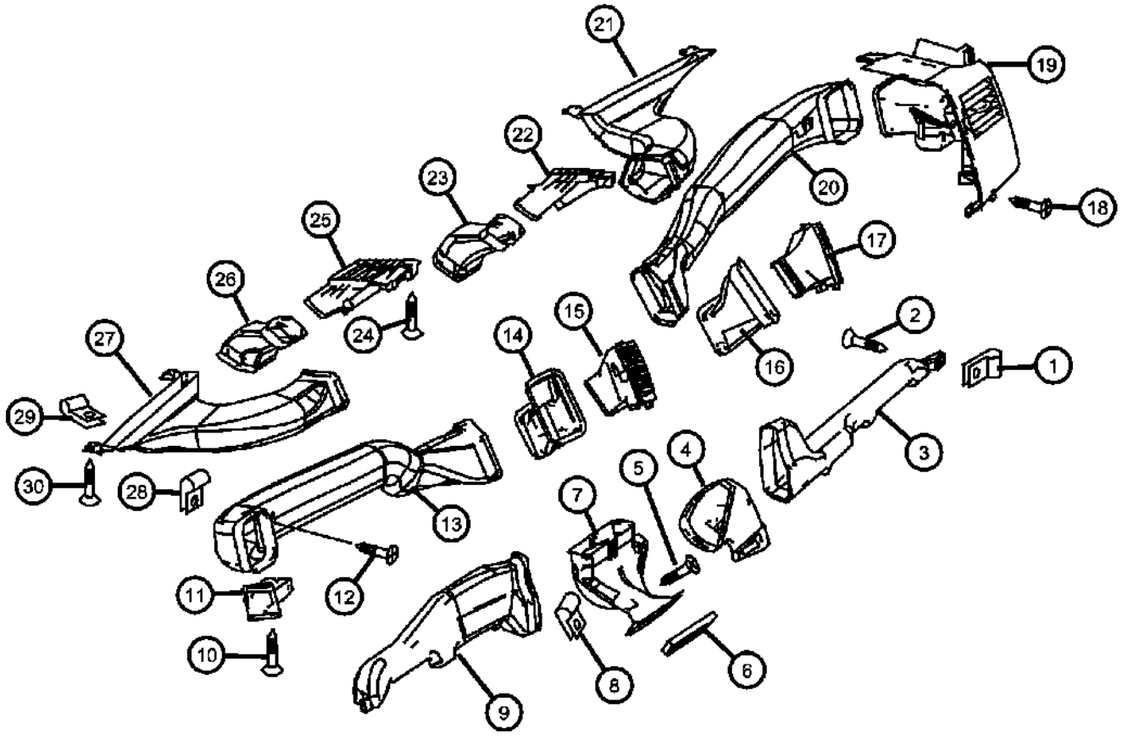

ITEM	PART NUMBER	QTY	LINE	SERIES	BODY	ENGINE	TRANS	TRIM	DESCRIPTION
1									NUT, Spring U Type
	68010366AA	2	2, 3, 6, 7		13, 15, 17, 53, 55	EG2, EXM			Air Duct Attachment
		2	3, 7		03, 05	EG2, EXM			Air Duct Attachment
2									SCREW, Tapping
	06104574AA	2	2, 3, 6, 7			EG2, EXM			Air Duct Attachment 4.8x16
		2	3, 7		03, 05	EG2, EXM			Air Duct Attachment 4.8x16
3	68010415AA	1	2, 3, 6, 7			EG2, EXM			DUCT, Floor, Leg Room, Right
4									DUCT, Floor
	68010419AA	1	2, 3, 6, 7		13, 15, 17, 53, 55	EG2, EXM			
		1	2, 3, 6, 7		53, 55	EG2, EXM			
5	06104574AA	1	2, 3, 6, 7			EG2, EXM			SCREW, Tapping
6	68004778AA	1	2, 3, 6, 7			EG2, EXM			SEAL, Air Duct
7									DUCT, Floor
	68004777AA	1	2, 3, 6, 7			EG2, EXM			Footwell Center
	68010418AA	1	2, 3, 6, 7		13, 15, 17, 53, 55	EG2, EXM			With [XGR+CW9]
8									NUT, Spring U Type
	68010366AA	1	3, 7		03, 05	EG2, EXM			Air Duct Attachment
		1	2, 3, 6, 7		13, 15, 17, 53, 55	EG2, EXM			Air Duct Attachment
9	68004776AA	1	2, 3, 6, 7			EG2, EXM			DUCT, Floor, Leg room, Left
10	06104510AA	2	2, 3, 6, 7			EG2, EXM			SCREW, Tapping, ST4.8x32-R
11	68010413AA	1	2, 3, 6, 7			EG2, EXM			DUCT, AIR, Outside, Left
12	06104574AA	4	2, 3, 6, 7			EG2, EXM			SCREW, Tapping
13	68004780AA	1	2, 3, 6, 7			EG2, EXM			DUCT, AIR, Top, Left
14	68004775AA	1	2, 3, 6, 7			EG2, EXM			DUCT, AIR, Central, Left
15	68004766AA	1	2, 3, 6, 7			EG2, EXM			OUTLET, Air Conditioning & Heater, Central, Left
16	68004774AA	1	2, 3, 6, 7			EG2, EXM			DUCT, AIR, Central, Right
17	68004767AA	1	2, 3, 6, 7			EG2, EXM			OUTLET, Air Conditioning & Heater, Central, Right
18	06104574AA	6	3, 7		03, 05	EG2, EXM			SCREW, Tapping, Mounting Nozzle 4.8x16
19									OUTLET, Air Conditioning & Heater

SPRINTER (VB)

SERIES	LINE	BODY	ENGINE	TRANSMISSION
L = LOWLINE	3 = HD DODGE 2WD 6 = Lt. Duty DODGE 4WD 2 = Med. Duty DODGE 2WD 7 = Med. Duty DODGE 4WD	17 = VAN WHEEL BASE 7 55 = WAGON WHEEL BASE 5 15 = VAN WHEEL BASE 5 53 = 119 WB 13 = 119 WB 05 = CAB CHASSIS WHEEL BASE 5 03 = CAB CHASSIS WHEEL BASE 3	EG2 = 3.5L V6 Gas Engine EXM = 3.0L V6 Turbo Diesel Engine	DGZ = 5-Speed Auto W5A380 Transmission

Air Ducting
Figure 24-505

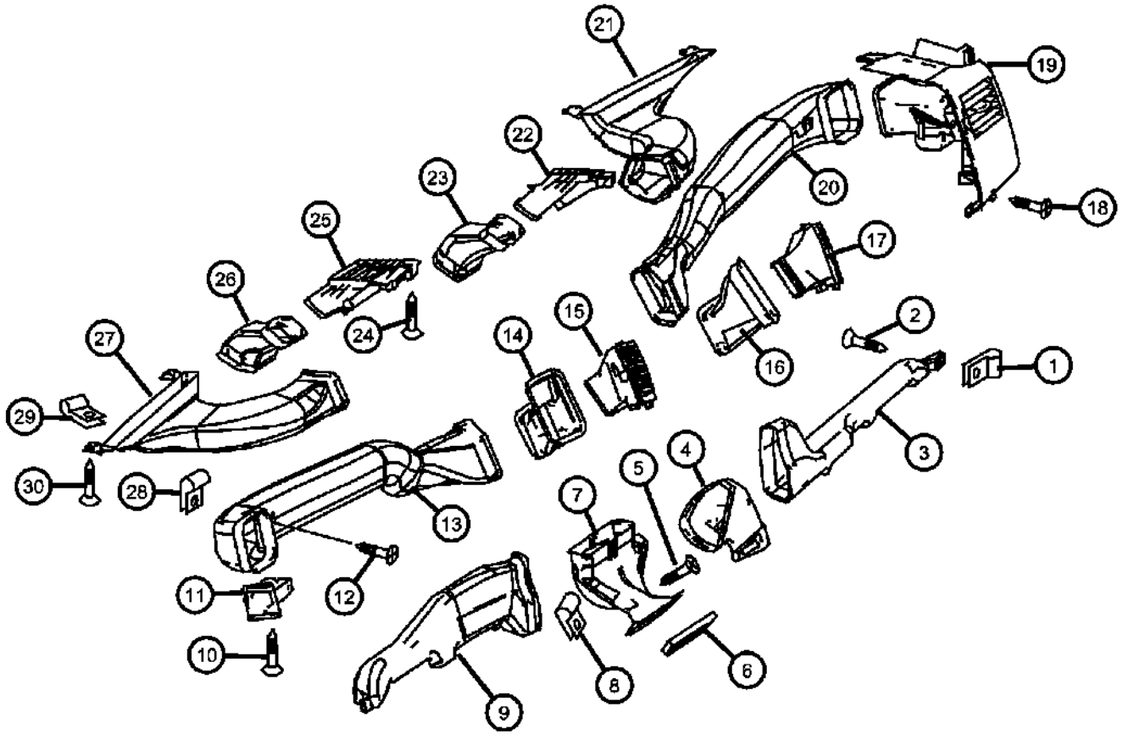

ITEM	PART NUMBER	QTY	LINE	SERIES	BODY	ENGINE	TRANS	TRIM	DESCRIPTION
	68004771AA	1	2, 3, 6, 7			EG2, EXM			Lateral, Left
	68004772AA	1	2, 3, 6, 7			EG2, EXM			Lateral, Right
20	68010417AA	1	2, 3, 6, 7			EG2, EXM			DUCT, AIR, Outside, Right
21	68010414AA	1	2, 3, 6, 7			EG2, EXM			DUCT, Defroster, Windshield, Right
22	68004769AA	1	2, 3, 6, 7			EG2, EXM			OUTLET, Air Conditioning & Heater, Long-Range Nozzle, Right
23	68010416AA	1	2, 3, 6, 7			EG2, EXM			DUCT, AIR, Long-Range Nozzle, Right
24	06104574AA	4	2, 3, 6, 7			EG2, EXM			SCREW, Tapping
25	68004768AA	1	2, 3, 6, 7			EG2, EXM			OUTLET, Air Conditioning & Heater, Long-Range Nozzle, Left
26	68004779AA	1	2, 3, 6, 7			EG2, EXM			DUCT, AIR, Long-Range Nozzle, Left
27	68004773AA	1	2, 3, 6, 7			EG2, EXM			DUCT, Defroster, Windshield, Left
28									NUT, Spring U Type
	68010366AA	2	3, 7		03, 05	EG2, EXM			Air Duct Attachment
		2	2, 3, 6, 7		13, 15, 17, 53, 55	EG2, EXM			Air Duct Attachment
29	68010366AA	2	2, 3, 6, 7		13, 15, 17, 53, 55	EG2, EXM			NUT, Spring U Type
30	06104574AA	4	2, 3, 6, 7			EG2, EXM			SCREW, Tapping

SPRINTER (VB)

SERIES	LINE	BODY	ENGINE	TRANSMISSION
L = LOWLINE	3 = HD DODGE 2WD 6 = Lt. Duty DODGE 4WD 2 = Med. Duty DODGE 2WD 7 = Med. Duty DODGE 4WD	17 = VAN WHEEL BASE 7 55 = WAGON WHEEL BASE 5 15 = VAN WHEEL BASE 5 53 = 119 WB 13 = 119 WB 05 = CAB CHASSIS WHEEL BASE 5 03 = CAB CHASSIS WHEEL BASE 3	EG2 = 3.5L V6 Gas Engine EXM = 3.0L V6 Turbo Diesel Engine	DGZ = 5-Speed Auto W5A380 Transmission

Air Duct to Roof
Figure 24-511

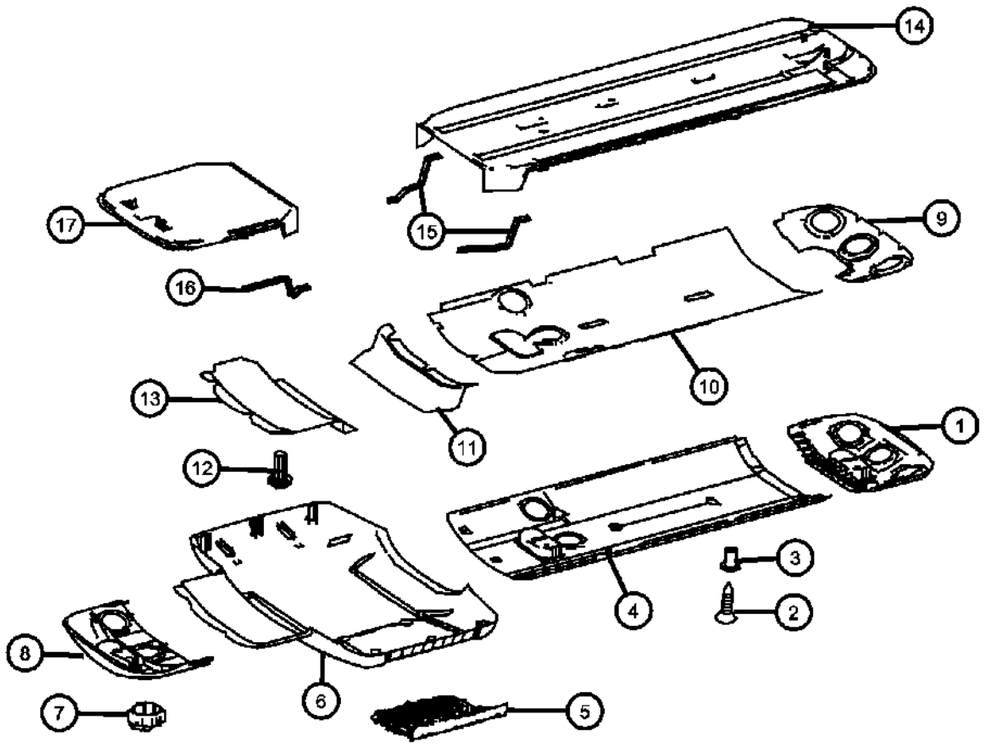

ITEM	PART NUMBER	QTY	LINE	SERIES	BODY	ENGINE	TRANS	TRIM	DESCRIPTION
1	1GZ43XDVAA	1	2, 6		53, 55	EG2, EXM			PANEL
2	05104609AA	3	2, 3, 6, 7		13, 15, 17, 53, 55	EG2, EXM			SCREW, Air Duct Attach-ment4.8x13
3	68012814AA	8	2, 6		53, 55	EG2, EXM			BUSHING, Air Duct Attachment
4	1GZ43XDVAA	1	2, 6		53, 55	EG2, EXM			PANEL
5	1HE31XDVAA	1	2, 6		53, 55	EG2, EXM			GRILLE
6	1GZ45XDVAA	1	2, 6		53, 55	EG2, EXM			COVER, Center Distribution
7	68012824AA	9	2, 6		53, 55	EG2, EXM			VENT
8	1GZ42XDVAA	1	2, 3, 6, 7		53, 55	EG2, EXM			COVER, Center DistributionFront
9	1GZ44XDVAA	1	2, 6		53, 55	EG2, EXM			PANEL
10	1GZ43XDVAA	1	2, 6		53, 55	EG2, EXM			PANEL
11	68012821AA	1	2, 6		53, 55	EG2, EXM			INSULATOR
12	68012820AA	1	2, 6		53, 55	EG2, EXM			INSULATOR
13	06104625AA	2	2, 3, 6, 7		13, 15, 17, 53, 55	EG2, EXM			SCREW
14	68012810AA	1	2, 6		53, 55	EG2, EXM			DUCT
15	68012811AA	2	2, 6		53, 55	EG2, EXM			SEAL
16	68012808AA	2	2, 6		53, 55	EG2, EXM			SEAL
17	68012807AA	1	2, 6		53, 55	EG2, EXM			DUCT

SPRINTER (VB)

SERIES	LINE	BODY	ENGINE	TRANSMISSION
L = LOWLINE	3 = HD DODGE 2WD 6 = Lt. Duty DODGE 4WD 2 = Med. Duty DODGE 2WD 7 = Med. Duty DODGE 4WD	17 = VAN WHEEL BASE 7 55 = WAGON WHEEL BASE 5 15 = VAN WHEEL BASE 5 53 = 119 WB 13 = 119 WB 05 = CAB CHASSIS WHEEL BASE 5 03 = CAB CHASSIS WHEEL BASE 3	EG2 = 3.5L V6 Gas Engine EXM = 3.0L V6 Turbo Diesel Engine	DGZ = 5-Speed Auto W5A380 Transmission

Group - 25
Emission Controls

Group - 25 Emission Controls

Illustration Title — Group-Fig. No.

EGR System
Change Over Valve and EGR Cooler ..... Fig. 25 - 205

Vacuum Canister/Leak Detection Pump
Vapor Canister and Leak Detection Pump ..... Fig. 25 - 305

Emission Harness
Emission Control Vacuum Harness ..... Fig. 25 - 405
Change Over Valve ..... Fig. 25 - 410

Air Pump
Air Pump and Related ..... Fig. 25 - 505
Vacuum Pump ..... Fig. 25 - 510

025-200 EGR System	**025-300** Vacuum Canister/Leak Detection Pump	**025-400** Emission Harness	**025-500** Air Pump
	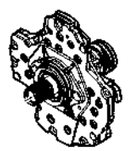	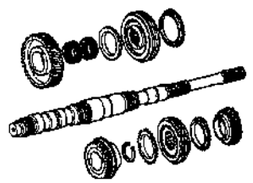	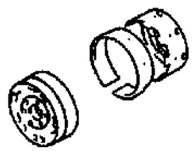

Change Over Valve and EGR Cooler
Figure 25-205

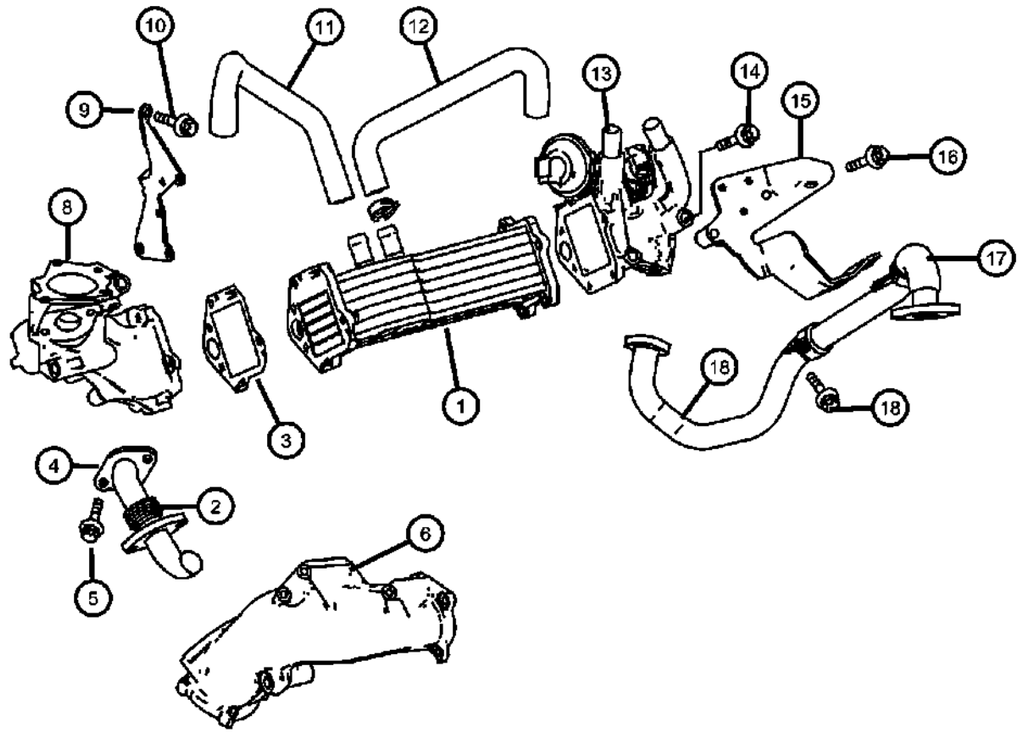

ITEM	PART NUMBER	QTY	LINE	SERIES	BODY	ENGINE	TRANS	TRIM	DESCRIPTION
NOTES: EGR Valve Is Located In Illustration [#1025] Intake Manifold Illustration Sales Code [EXM] = 3.0L V6 Turbo Diesel Engine									
1	68014095AA	1	2, 3, 6, 7			EXM	DGZ		COOLER
2	68012322AA	1	2, 3, 6, 7			EXM	DGZ		TUBE
3	68014096AA	1	2, 3, 6, 7			EXM	DGZ		GASKET
4	05175695AA	1	2, 3, 6, 7			EXM	DGZ		GASKET
5	06104682AA	2	2, 3, 6, 7			EXM	DGZ		BOLT, [M6x19]
6	68012320AA	1	2, 3, 6, 7			EXM	DGZ		MANIFOLD, Intake, Transverse Tube Charge Air Pipe
-7	68012326AA	1	2, 3, 6, 7			EXM	DGZ		GASKET
8	68014081AA	1	2, 3, 6, 7			EXM	DGZ		HOUSING
9	68014098AA	1	2, 3, 6, 7			EXM	DGZ		BRACKET
10	05137660AA	2	2, 3, 6, 7			EXM	DGZ		SCREW
11	68014092AA	1	2, 3, 6, 7			EXM	DGZ		HOSE
12	68014093AA	1	2, 3, 6, 7			EXM	DGZ		HOSE
13	68014099AA	1	2, 3, 6, 7			EXM	DGZ		VALVE
14	06104036AA	2	2, 3, 6, 7			EXM	DGZ		SCREW
15	68014097AA	1	2, 3, 6, 7			EXM	DGZ		BRACKET
16	06104005AA	1	2, 3, 6, 7			EXM	DGZ		BOLT, 6 Lobe External Head, M6X1.00X16.00
17	68014094AA	1	2, 3, 6, 7			EXM	DGZ		TUBE
18	06104004AA	2	2, 3, 6, 7			EXM	DGZ		BOLT

SPRINTER (VB)

SERIES	LINE	BODY	ENGINE	TRANSMISSION
L = LOWLINE	3 = HD DODGE 2WD 6 = Lt. Duty DODGE 4WD 2 = Med. Duty DODGE 2WD 7 = Med. Duty DODGE 4WD	17 = VAN WHEEL BASE 7 55 = WAGON WHEEL BASE 5 15 = VAN WHEEL BASE 5 53 = 119 WB 13 = 119 WB 05 = CAB CHASSIS WHEEL BASE 5 03 = CAB CHASSIS WHEEL BASE 3	EG2 = 3.5L V6 Gas Engine EXM = 3.0L V6 Turbo Diesel Engine	DGZ = 5-Speed Auto W5A380 Transmission

Vapor Canister and Leak Detection Pump
Figure 25-305

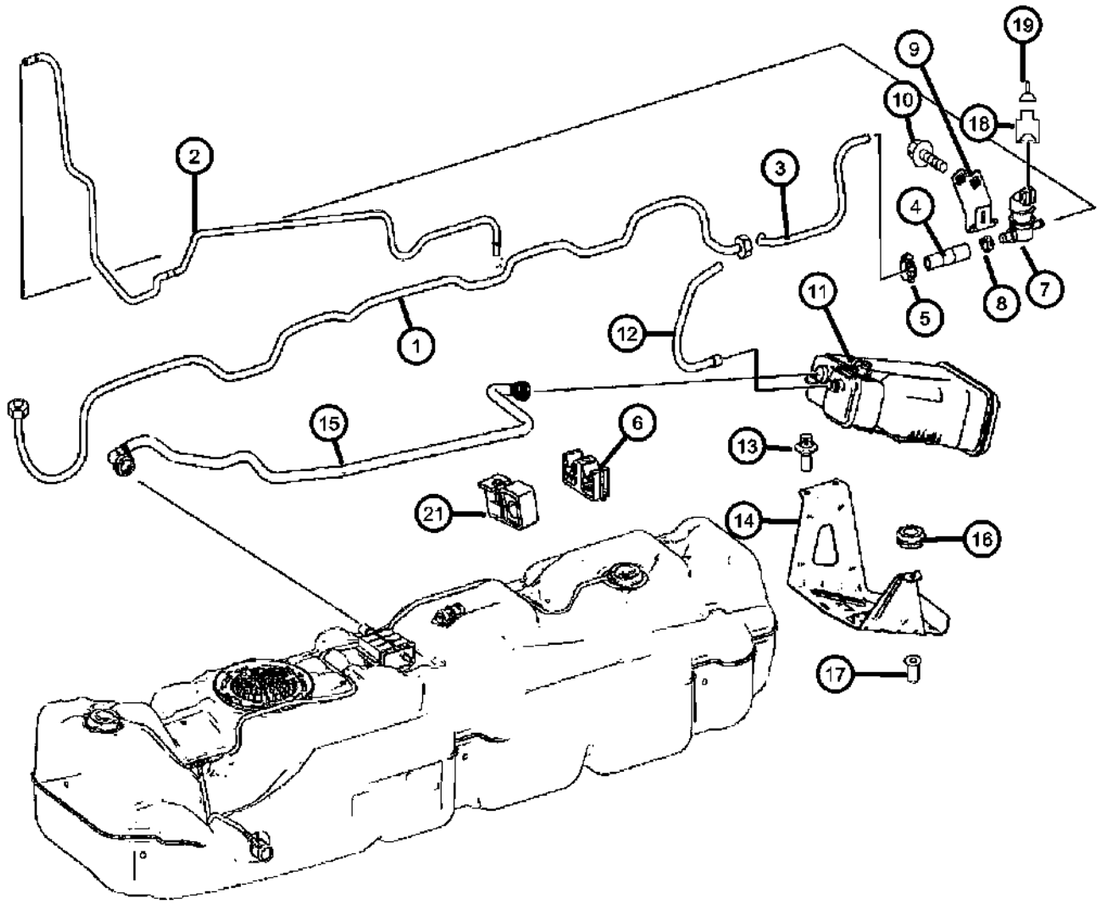

ITEM	PART NUMBER	QTY	LINE	SERIES	BODY	ENGINE	TRANS	TRIM	DESCRIPTION
1									HOSE, Purge
	68013533AA	1	3, 7		05	EG2	DGZ		
	68013534AA	1	2, 6		13, 15, 17, 53, 55	EG2	DGZ		
		1	3		05	EG2	DGZ		
2									HOSE, Purge
	68013537AA	1	2, 6		13, 15, 17, 53, 55	EG2	DGZ		
		1	3, 7		03, 05	EG2	DGZ		
3	68013539AA	1	2, 3, 6, 7			EG2	DGZ		HOSE, Purge
4									HOSE, HOSE
	68023887AA	1	2, 6		13, 15, 17, 53, 55	EG2	DGZ		Regeneration Line
		1	3		05	EG2			Regeneration Line
5	06104822AA	1	2, 3, 6, 7			EG2	DGZ		CLAMP, Hose
6	05137250AA	4	2, 3, 6			EG2	DGZ		CLIP, Regeneration Line
7	68028735AA	1	2, 3, 6, 7			EG2	DGZ		VALVE, Purge Control
8									CLAMP
	05080439AB	1	3, 7		03, 05	EG2	DGZ		
		1	2, 6		13, 15, 17, 53, 55	EG2	DGZ		
9									BRACKET, Valve
	68013540AA	1	3, 7		03, 05	EG2	DGZ		Regeneration Valve
		1	2, 6		13, 15, 17, 53, 55	EG2	DGZ		Regeneration Valve
10	05126197AA	2	2, 3, 6, 7			EG2	DGZ		SCREW, Bracket To Canister
11	68013541AA	1	2, 3, 6, 7			EG2	DGZ		CANISTER, Fuel Vapor, Charcoal Canister
12									HOSE, Breather
	68013542AA	1	3, 7		03, 05	EG2	DGZ		
		1	2, 6		13, 15, 17, 53, 55	EG2	DGZ		
13	06104022AB	1	2, 3, 6, 7			EG2	DGZ		SCREW
14									BRACKET, Vapor Canister
	68020914AA	1	3, 7		03, 05, 13, 15, 17	EG2	DGZ		

SPRINTER (VB)

SERIES	LINE	BODY	ENGINE	TRANSMISSION
L = LOWLINE	3 = HD DODGE 2WD 6 = Lt. Duty DODGE 4WD 2 = Med. Duty DODGE 2WD 7 = Med. Duty DODGE 4WD	17 = VAN WHEEL BASE 7 55 = WAGON WHEEL BASE 5 15 = VAN WHEEL BASE 5 53 = 119 WB 13 = 119 WB 05 = CAB CHASSIS WHEEL BASE 5 03 = CAB CHASSIS WHEEL BASE 3	EG2 = 3.5L V6 Gas Engine EXM = 3.0L V6 Turbo Diesel Engine	DGZ = 5-Speed Auto W5A380 Transmission

Vapor Canister and Leak Detection Pump
Figure 25-305

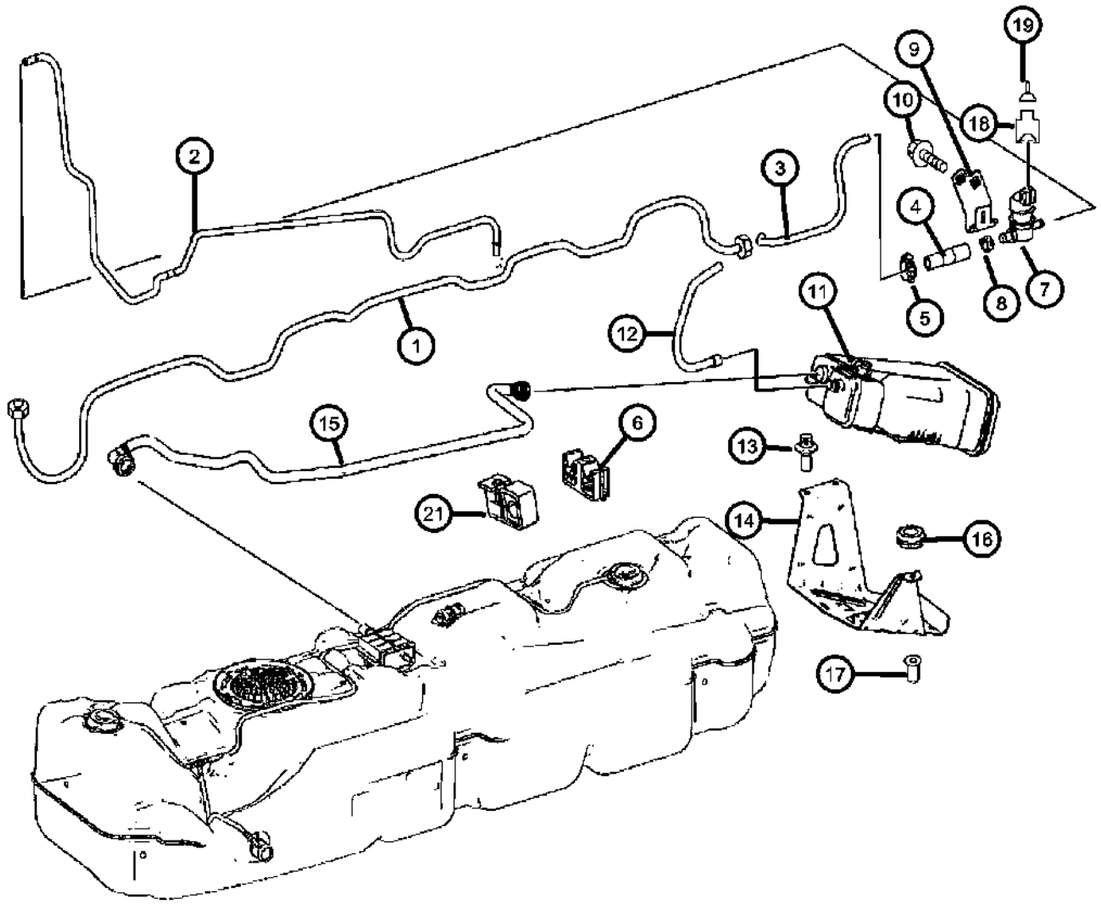

ITEM	PART NUMBER	QTY	LINE	SERIES	BODY	ENGINE	TRANS	TRIM	DESCRIPTION
	68020915AA	1	2, 6		13, 15, 17, 53, 55	EG2	DGZ		
		1	3		05	EG2	DGZ		
15									HOSE, Breather
	68013545AA	1	3, 7		05	EG2	DGZ		
	68013546AA	1	2, 6			EG2	DGZ		
16									GROMMET
	05097181AA	1	3, 7		03, 05	EG2	DGZ		
		1	2, 6		13, 15, 17, 53, 55	EG2	DGZ		
17									NUTSERT, Rivet
	06105175AA	3	3, 7		03, 05	EG2	DGZ		
		3	2, 6		13, 15, 17, 53, 55	EG2	DGZ		
18	05120749AA	1	2, 3, 6, 7			EG2, EXM	DGZ		CONNECTOR, Regeneration Valve [2PIN; Y58/1]
19	05103880AA	AR	2, 3, 6, 7			EG2, EXM	DGZ		TERMINAL, [0.5 - 1.0 MM2; JPT; Y58/1]
-20									GASKET
	05103661AA	1	2, 3, 6, 7			EG2, EXM	DGZ		[0.5 - 1.0 MM; Y58/1]
	05120858AA	2	2, 3, 6, 7			EG2, EXM	DGZ		Dummy Plug [Y58/1]
21	68013535AA	2	3, 7		05	EG2	DGZ		RETAINER

SPRINTER (VB)

SERIES	LINE	BODY	ENGINE	TRANSMISSION
L = LOWLINE	3 = HD DODGE 2WD 6 = Lt. Duty DODGE 4WD 2 = Med. Duty DODGE 2WD 7 = Med. Duty DODGE 4WD	17 = VAN WHEEL BASE 7 55 = WAGON WHEEL BASE 5 15 = VAN WHEEL BASE 5 53 = 119 WB 13 = 119 WB 05 = CAB CHASSIS WHEEL BASE 5 03 = CAB CHASSIS WHEEL BASE 3	EG2 = 3.5L V6 Gas Engine EXM = 3.0L V6 Turbo Diesel Engine	DGZ = 5-Speed Auto W5A380 Transmission

Emission Control Vacuum Harness
Figure 25-405

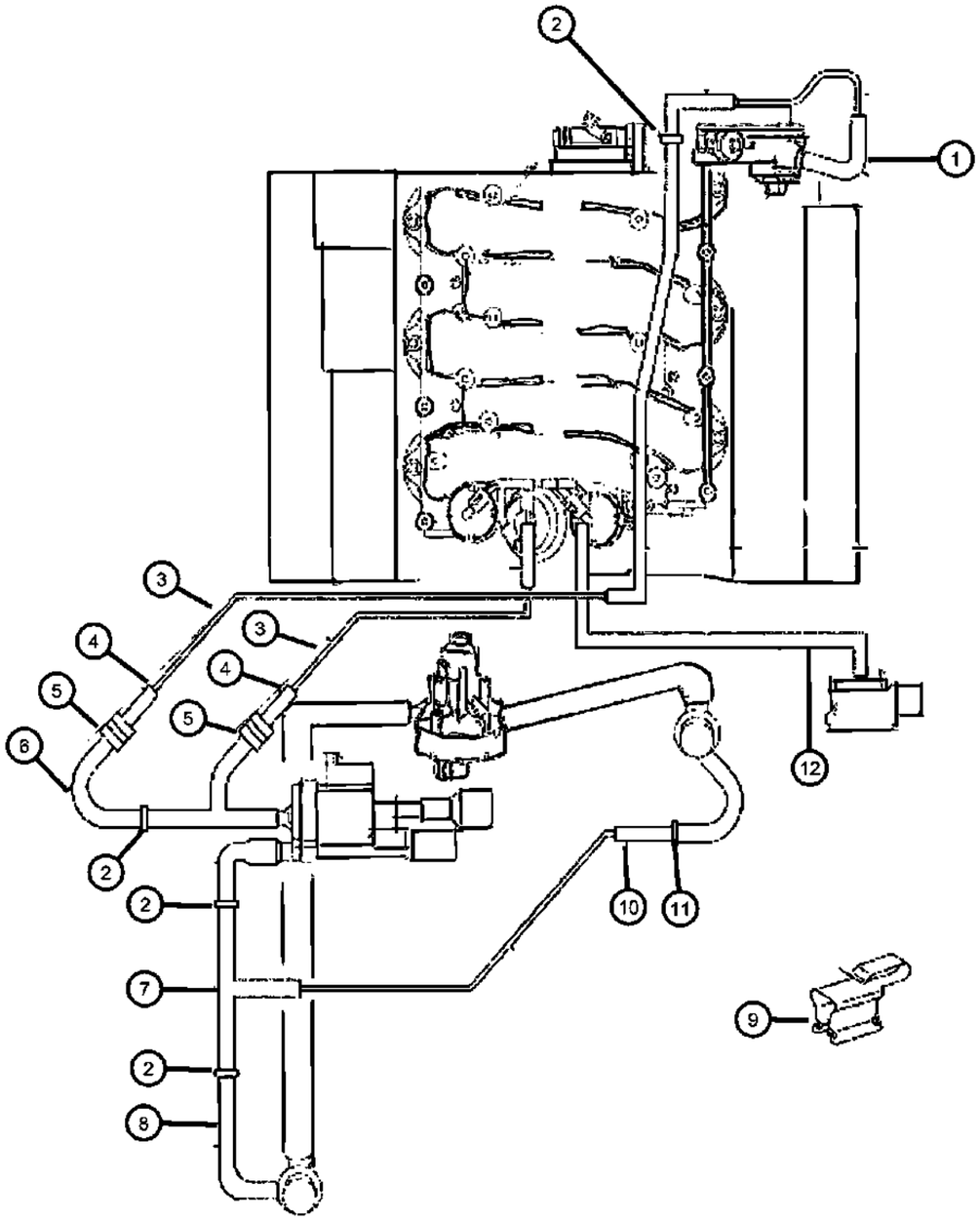

ITEM	PART NUMBER	QTY	LINE	SERIES	BODY	ENGINE	TRANS	TRIM	DESCRIPTION
1	05097187AA	1	2, 3, 6, 7			EG2	DGZ		HOSE
2	05080337AA	1	2, 3, 6, 7			EG2	DGZ		CONNECTOR
3	05098831AA	21	2, 3, 6, 7			EG2	DGZ		HOSE, Vacuum
4	05097844AA	900	2, 3, 6, 7		13, 15, 17, 53, 55	EG2, EXM	DGZ		HOSE
5	05096374AC	1	2, 3, 6, 7			EG2	DGZ		VALVE, Check
6	05097187AA	1	2, 3, 6, 7			EG2	DGZ		HOSE
7	05117460AA	1	2, 3, 6, 7			EG2	DGZ		HOSE, HOSE
8	05080390AA	1	2, 3, 6, 7			EG2	DGZ		HOSE
9	05098353AA	1	2, 3, 6, 7			EG2	DGZ		CLAMP, Cable
10	05097844AA	900	2, 3, 6, 7		13, 15, 17, 53, 55	EG2, EXM	DGZ		HOSE
11	05080337AA	1	2, 3, 6, 7			EG2	DGZ		CONNECTOR, Vacuum Lines
12	05097844AA	900	2, 3, 6, 7		13, 15, 17, 53, 55	EG2, EXM	DGZ		HOSE

SPRINTER (VB)

SERIES	LINE	BODY	ENGINE	TRANSMISSION
L = LOWLINE	3 = HD DODGE 2WD 6 = Lt. Duty DODGE 4WD 2 = Med. Duty DODGE 2WD 7 = Med. Duty DODGE 4WD	17 = VAN WHEEL BASE 7 55 = WAGON WHEEL BASE 5 15 = VAN WHEEL BASE 5 53 = 119 WB 13 = 119 WB 05 = CAB CHASSIS WHEEL BASE 5 03 = CAB CHASSIS WHEEL BASE 3	EG2 = 3.5L V6 Gas Engine EXM = 3.0L V6 Turbo Diesel Engine	DGZ = 5-Speed Auto W5A380 Transmission

Change Over Valve
Figure 25-410

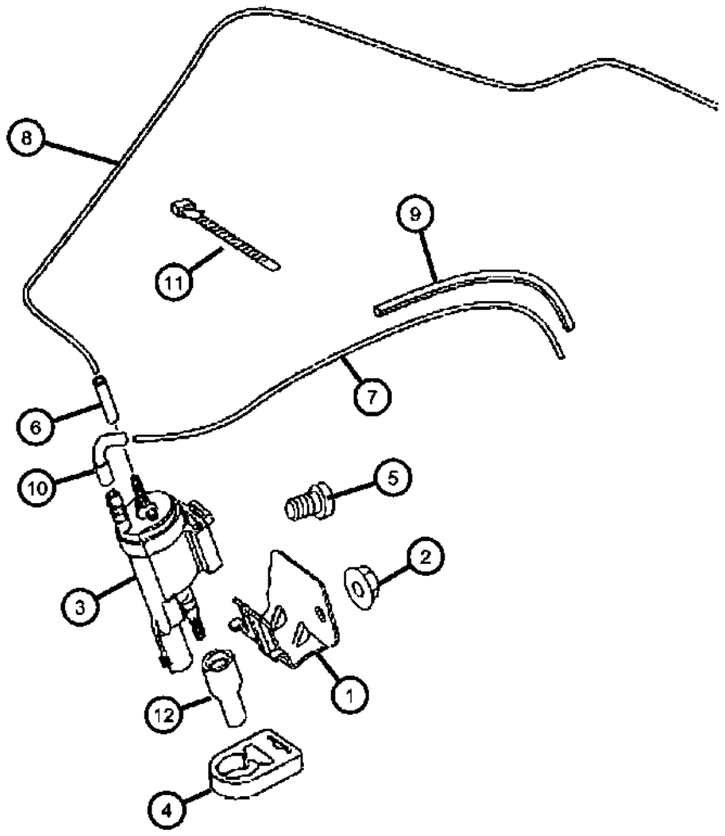

ITEM	PART NUMBER	QTY	LINE	SERIES	BODY	ENGINE	TRANS	TRIM	DESCRIPTION
1	68005318AA	1	2, 3, 6, 7			EXM	DGZ		BRACKET
2									NUT
	68004878AA	1	3, 7		03, 05	EG2, EXM	DGZ		
		1	2, 3, 6, 7		13, 15, 17, 53, 55	EG2, EXM	DGZ		
3									SOLENOID, Vacuum
	05099822AA	1	2, 3, 6, 7		13, 15, 17, 53, 55	EXM	DGZ		
		1	3, 7		03, 05	EXM	DGZ		
4									BRACKET, Vacuum Valve
	05119974AA	1	2, 3, 6, 7		13, 15, 17, 53, 55	EXM	DGZ		
		1	3, 7		03, 05	EXM	DGZ		
5	06104004AA	1	2, 3, 6, 7			EXM	DGZ		BOLT
6	06104004AA	1							HOSE 1 METER, Roll Stock, (NOT SERVICED)
7	05125911AA	22	2, 3, 6, 7			EXM	DGZ		HOSE, Vacuum
8	05125911AA	22	2, 3, 6, 7			EXM	DGZ		HOSE, Vacuum, From Change Over Valve To Check Valve
9									HOSE
	05097844AA	4	2, 3, 6, 7		13, 15, 17, 53, 55	EXM	DGZ		[8x3.5MM]
		4	3, 7		03, 05	EXM	DGZ		[8x3.5MM]
10									HOSE, HOSE
	05117462AA	1	2, 3, 6, 7		13, 15, 17, 53, 55	EXM	DGZ		Molded Hose
		1	3, 7		03, 05	EXM	DGZ		Molded Hose
11									STRAP
	05096424AA	1	2, 6		13, 15, 17, 53, 55	EXM	DGZ		
		1	3, 7		03, 05	EXM	DGZ		
12	05097188AA	1	2, 3, 6, 7		13, 15, 17, 53, 55	EXM	DGZ		BOOT

SPRINTER (VB)

SERIES	LINE	BODY	ENGINE	TRANSMISSION
L = LOWLINE	3 = HD DODGE 2WD 6 = Lt. Duty DODGE 4WD 2 = Med. Duty DODGE 2WD 7 = Med. Duty DODGE 4WD	17 = VAN WHEEL BASE 7 55 = WAGON WHEEL BASE 5 15 = VAN WHEEL BASE 5 53 = 119 WB 13 = 119 WB 05 = CAB CHASSIS WHEEL BASE 5 03 = CAB CHASSIS WHEEL BASE 3	EG2 = 3.5L V6 Gas Engine EXM = 3.0L V6 Turbo Diesel Engine	DGZ = 5-Speed Auto W5A380 Transmission

Air Pump and Related
Figure 25-505

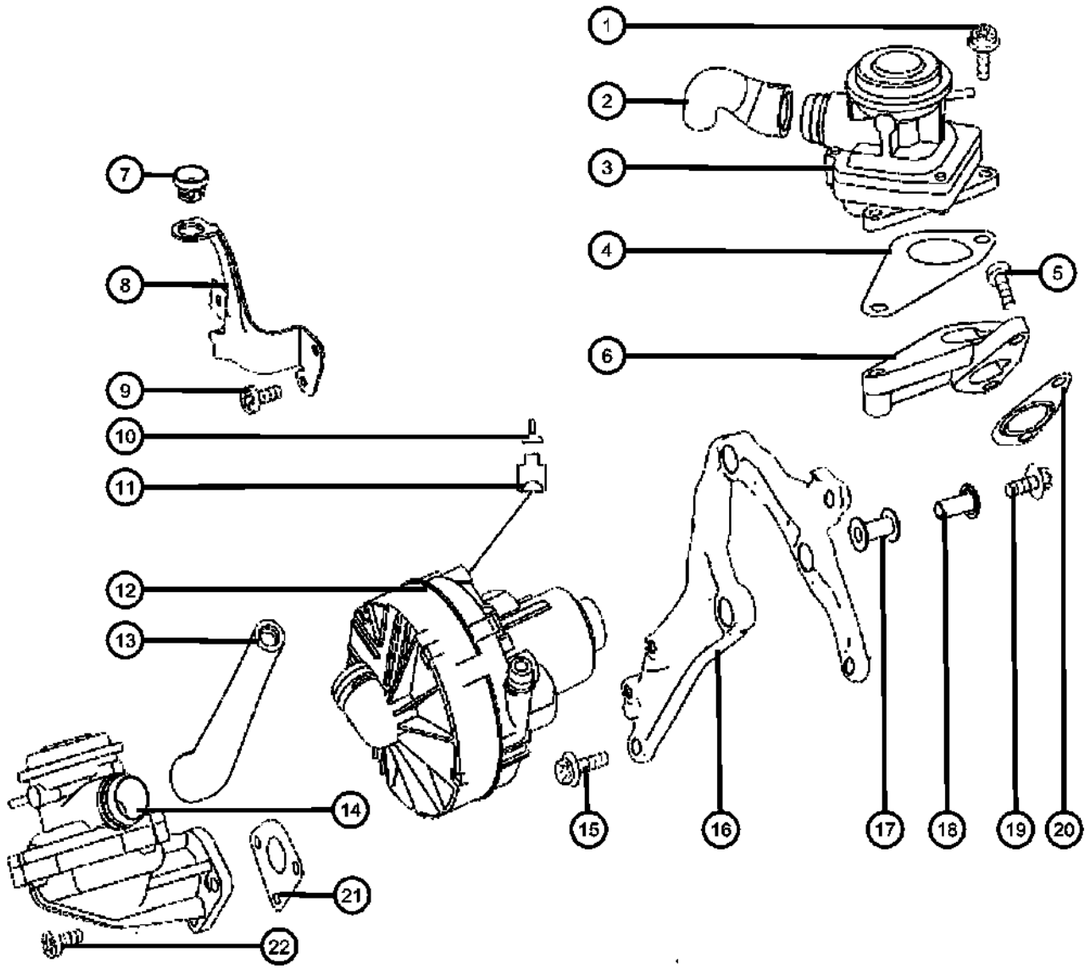

ITEM	PART NUMBER	QTY	LINE	SERIES	BODY	ENGINE	TRANS	TRIM	DESCRIPTION
1	68005186AA	3	2, 3, 6, 7			EG2	DGZ		SCREW
2	68011778AA	1	2, 3, 6, 7			EG2	DGZ		HOSE
3	68011787AA	1	2, 3, 6, 7			EG2	DGZ		VALVE
4	68011789AA	1	2, 3, 6, 7			EG2	DGZ		GASKET
5	68005186AA	2	2, 3, 6, 7			EG2	DGZ		SCREW
6	68011790AA	1	2, 3, 6, 7			EG2	DGZ		VALVE
7	68005688AA	1	2, 3, 6, 7			EG2	DGZ		INSULATOR
8	68011785AA	1	2, 3, 6, 7			EG2	DGZ		BRACKET, Air Pump
9	06104675AA	5	2, 3, 6, 7			EG2	DGZ		BOLT, Pan Head, M6.0X1.00X14.00
10	05133478AA	AR	2, 3, 6, 7			EG2	DGZ		TERMINAL
11	05138040AA	1	2, 3, 6, 7			EG2	DGZ		CONNECTOR
12	68011776AA	1	2, 3, 6, 7			EG2	DGZ		PUMP, Air
13	68011781AA	1	2, 3, 6, 7			EG2	DGZ		HOSE
14	68011792AA	1	2, 3, 6, 7			EG2	DGZ		VALVE
15	68005186AA	3	2, 3, 6, 7			EG2	DGZ		SCREW
16	68011774AA	1	2, 3, 6, 7			EG2	DGZ		BRACKET, Air Pump
17	05135456AA	3	2, 3, 6, 7			EG2	DGZ		DAMPER, Shock Absorber
18	68011775AA	3	2, 3, 6, 7			EG2	DGZ		SPACER
19	06104124AA	3	2, 3, 6, 7			EG2	DGZ		BOLT, Hex Flange Head, M6X1.0X30.00
20	68011788AA	1	2, 3, 6, 7			EG2	DGZ		GASKET
21	68011793AA	1	2, 3, 6, 7			EG2	DGZ		GASKET
22	68005186AA	3	2, 3, 6, 7			EG2	DGZ		SCREW

SPRINTER (VB)

SERIES	LINE	BODY	ENGINE	TRANSMISSION
L = LOWLINE	3 = HD DODGE 2WD 6 = Lt. Duty DODGE 4WD 2 = Med. Duty DODGE 2WD 7 = Med. Duty DODGE 4WD	17 = VAN WHEEL BASE 7 55 = WAGON WHEEL BASE 5 15 = VAN WHEEL BASE 5 53 = 119 WB 13 = 119 WB 05 = CAB CHASSIS WHEEL BASE 5 03 = CAB CHASSIS WHEEL BASE 3	EG2 = 3.5L V6 Gas Engine EXM = 3.0L V6 Turbo Diesel Engine	DGZ = 5-Speed Auto W5A380 Transmission

AR = use ase required - = Non illustrrated part

<< RETURN TO GROUP INDEX

Vacuum Pump
Figure 25-510

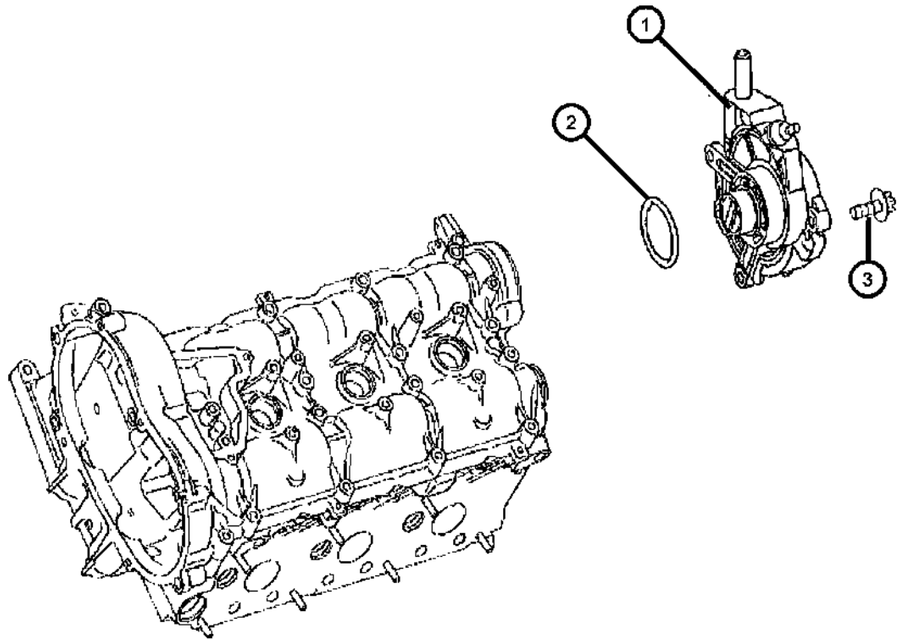

ITEM	PART NUMBER	QTY	LINE	SERIES	BODY	ENGINE	TRANS	TRIM	DESCRIPTION
1	68017743AA	1	2, 3, 6, 7			EG2	DGZ		PUMP, Air, Vacuum Pump
2	68028233AA	1	2, 3, 6, 7			EG2	DGZ		O RING
3	06104006AA	4	2, 3, 6, 7			EG2	DGZ		BOLT, Torx Socket Head, M6X1.00X20.00

SPRINTER (VB)

SERIES	LINE	BODY	ENGINE	TRANSMISSION
L = LOWLINE	3 = HD DODGE 2WD 6 = Lt. Duty DODGE 4WD 2 = Med. Duty DODGE 2WD 7 = Med. Duty DODGE 4WD	17 = VAN WHEEL BASE 7 55 = WAGON WHEEL BASE 5 15 = VAN WHEEL BASE 5 53 = 119 WB 13 = 119 WB 05 = CAB CHASSIS WHEEL BASE 5 03 = CAB CHASSIS WHEEL BASE 3	EG2 = 3.5L V6 Gas Engine EXM = 3.0L V6 Turbo Diesel Engine	DGZ = 5-Speed Auto W5A380 Transmission

Group - 26

Labels

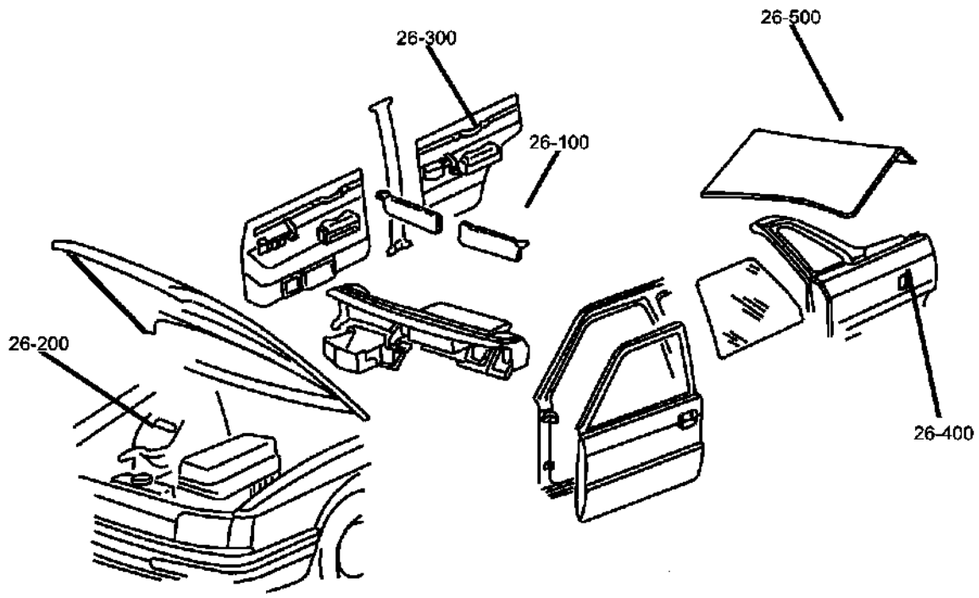

026-100 Interior	**026-200** Under Hood	**026-300** Doors	**026-400** Exterior

Group - 26 Labels

Illustration Title — Group-Fig. No.

Interior
Visor ..... Fig. 26 - 105

Under Hood
Other, Battery ..... Fig. 26 - 225

Doors
Tire ..... Fig. 26 - 305

Exterior
Fuel Door ..... Fig. 26 - 405

Visor
Figure 26-105

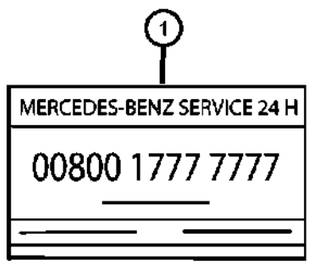

ITEM	PART NUMBER	QTY	LINE	SERIES	BODY	ENGINE	TRANS	TRIM	DESCRIPTION
1	05104450AA	1		L	03, 05	EG2, EXM			GUIDE
-2	68005381AA	1		L	13, 15, 17, 53, 55	EG2, EXM			LABEL, Warning
-3	68005380AA	1		L	13, 15, 17, 53, 55	EG2, EXM			LABEL, Air Conditioner

SPRINTER (VB)

SERIES	LINE	BODY	ENGINE	TRANSMISSION
L = LOWLINE	3 = HD DODGE 2WD 6 = Lt. Duty DODGE 4WD 2 = Med. Duty DODGE 2WD 7 = Med. Duty DODGE 4WD	17 = VAN WHEEL BASE 7 55 = WAGON WHEEL BASE 5 15 = VAN WHEEL BASE 5 53 = 119 WB 13 = 119 WB 05 = CAB CHASSIS WHEEL BASE 5 03 = CAB CHASSIS WHEEL BASE 3	EG2 = 3.5L V6 Gas Engine EXM = 3.0L V6 Turbo Diesel Engine	DGZ = 5-Speed Auto W5A380 Transmission

Other, Battery
Figure 26-225

ITEM	PART NUMBER	QTY	LINE	SERIES	BODY	ENGINE	TRANS	TRIM	DESCRIPTION
1	68015895AA	1		L		EG2, EXM			LABEL, Battery

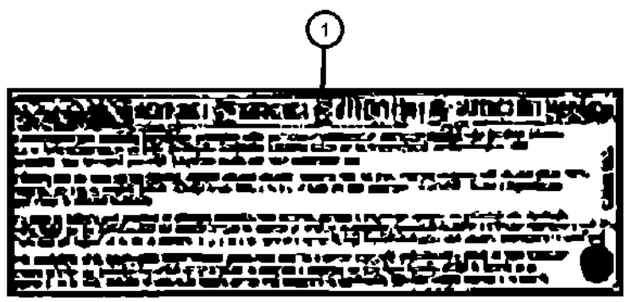

SPRINTER (VB)

SERIES	LINE	BODY	ENGINE	TRANSMISSION
L = LOWLINE	3 = HD DODGE 2WD 6 = Lt. Duty DODGE 4WD 2 = Med. Duty DODGE 2WD 7 = Med. Duty DODGE 4WD	17 = VAN WHEEL BASE 7 55 = WAGON WHEEL BASE 5 15 = VAN WHEEL BASE 5 53 = 119 WB 13 = 119 WB 05 = CAB CHASSIS WHEEL BASE 5 03 = CAB CHASSIS WHEEL BASE 3	EG2 = 3.5L V6 Gas Engine EXM = 3.0L V6 Turbo Diesel Engine	DGZ = 5-Speed Auto W5A380 Transmission

Tire
Figure 26-305

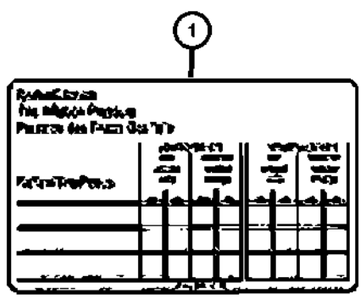

ITEM	PART NUMBER	QTY	LINE	SERIES	BODY	ENGINE	TRANS	TRIM	DESCRIPTION
1	68022059AA	4		L		EG2, EXM			LABEL, Tire Pressure

SPRINTER (VB)

SERIES	LINE	BODY	ENGINE	TRANSMISSION
L = LOWLINE	3 = HD DODGE 2WD 6 = Lt. Duty DODGE 4WD 2 = Med. Duty DODGE 2WD 7 = Med. Duty DODGE 4WD	17 = VAN WHEEL BASE 7 55 = WAGON WHEEL BASE 5 15 = VAN WHEEL BASE 5 53 = 119 WB 13 = 119 WB 05 = CAB CHASSIS WHEEL BASE 5 03 = CAB CHASSIS WHEEL BASE 3	EG2 = 3.5L V6 Gas Engine EXM = 3.0L V6 Turbo Diesel Engine	DGZ = 5-Speed Auto W5A380 Transmission

Fuel Door
Figure 26-405



ITEM	PART NUMBER	QTY	LINE	SERIES	BODY	ENGINE	TRANS	TRIM	DESCRIPTION
1	68025191AA	1		L		EXM			LABEL, Fuel
-2	68013523AA	1		L		EXM			LABEL, Warning, Refuelling Plate in English

SPRINTER (VB)

SERIES	LINE	BODY	ENGINE	TRANSMISSION
L = LOWLINE	3 = HD DODGE 2WD 6 = Lt. Duty DODGE 4WD 2 = Med. Duty DODGE 2WD 7 = Med. Duty DODGE 4WD	17 = VAN WHEEL BASE 7 55 = WAGON WHEEL BASE 5 15 = VAN WHEEL BASE 5 53 = 119 WB 13 = 119 WB 05 = CAB CHASSIS WHEEL BASE 5 03 = CAB CHASSIS WHEEL BASE 3	EG2 = 3.5L V6 Gas Engine EXM = 3.0L V6 Turbo Diesel Engine	DGZ = 5-Speed Auto W5A380 Transmission

Group - 27

Glass

Illustration Title — Group-Fig. No.

Glass and Interior Rear View Mirror

Windshield & Rear Glass ..... Fig. 27 - 105
Windshield, Partition & Roof Glass ..... Fig. 27 - 110
Windshield ..... Fig. 27 - 115
Rear Cargo Door Glass ..... Fig. 27 - 120
Sliding Door Glass ..... Fig. 27 - 125
Driver & Passenger Door Glass ..... Fig. 27 - 130
Fixed Glass Without Sliding Door ..... Fig. 27 - 135
Rear Side Glass ..... Fig. 27 - 140
Rear Side And Quarter Glass ..... Fig. 27 - 145
Window & Head Side Airbag ..... Fig. 27 - 150

027-100 Glass and Interior Rear View Mirror			

Windshield & Rear Glass
Figure 27-105

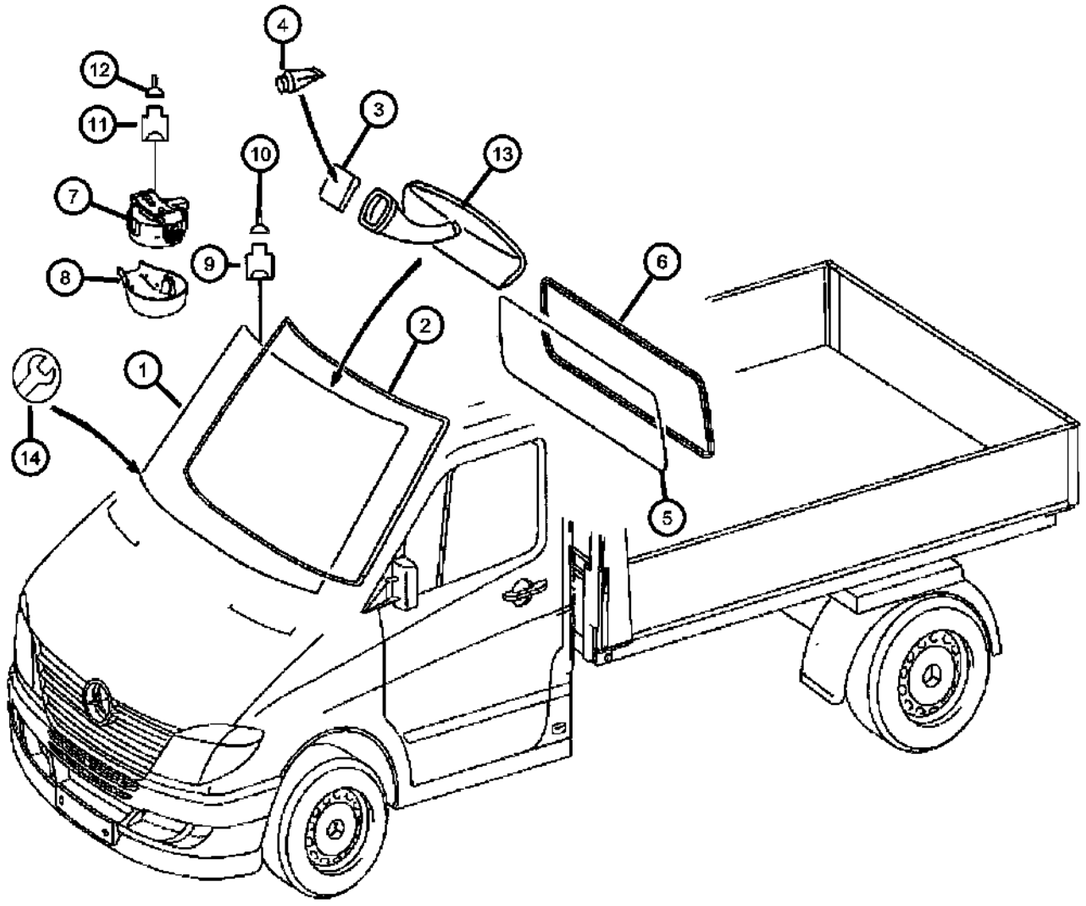

ITEM	PART NUMBER	QTY	LINE	SERIES	BODY	ENGINE	TRANS	TRIM	DESCRIPTION
1									WINDSHIELD
	68018758AA	1	2, 3, 6, 7	L					With [GBG + NHW]
	68018759AA	1	2, 3, 6, 7	L					With [GBE + NHW]
	68018760AA	1	2, 3, 6, 7	L					With [GBB] Or [GBE]
2	68018762AA	1	7, 2, 3, 6	L					SEAL, Windshield
3	05104241AA	1	3, 7	L	03, 05				BUTTON, Rear View Mirror
4	05125662AB	1	2, 3, 6, 7	L					ADHESIVE
5									GLASS, Backlite, Fixed
	05104249AA	1	3, 7	L	03, 05				With [GEV]
	05122357AA	1	3, 7	L	03, 05				With [GEV+GBE]
6									WEATHERSTRIP
	05104250AA	1	3, 7	L	03, 05				With [GEV]
	05104251AA	1	3, 7	L	03, 05				With [GEV+CBJ]
7	68013389AA	1	2, 3, 6, 7	L					SENSOR, Rain, With [NHW]
8	68013425AA	1	2, 3, 6, 7	L					COVER, With [NHW]
9									CONNECTOR
	68011379AA	1	2, 3, 6, 7	L					[1 Pin / R22/2] With [NHW+GBG]
		1	2, 3, 6, 7	L					[1 Pin / R22/2] With [NHW]
10	05133379AA	AR	2, 3, 6, 7	L					TERMINAL, Male, [6.0 MM2; R22/2]
11	05120717AA	1	3, 7	L	03, 05				CONNECTOR, Rain & Light Sensor [3 Pin / B38/2]
12	05103873AA	3	3, 7	L	03, 05				TERMINAL, [0.75 MM2; MQS; B38/2]
13									MIRROR, Inside Rear View
	05104435AA	1	2, 3, 6, 7	L					With [GNA] Without [NHW]
	68017272AA	1	2, 3, 6, 7	L					With [GNA + NHW]
14	05104594AA	1	3, 7	L	03, 05				REPAIR KIT, Windshield

SPRINTER (VB)

SERIES	LINE	BODY	ENGINE	TRANSMISSION
L = LOWLINE	3 = HD DODGE 2WD 6 = Lt. Duty DODGE 4WD 2 = Med. Duty DODGE 2WD 7 = Med. Duty DODGE 4WD	17 = VAN WHEEL BASE 7 55 = WAGON WHEEL BASE 5 15 = VAN WHEEL BASE 5 53 = 119 WB 13 = 119 WB 05 = CAB CHASSIS WHEEL BASE 5 03 = CAB CHASSIS WHEEL BASE 3	EG2 = 3.5L V6 Gas Engine EXM = 3.0L V6 Turbo Diesel Engine	DGZ = 5-Speed Auto W5A380 Transmission

Windshield, Partition & Roof Glass
Figure 27-110

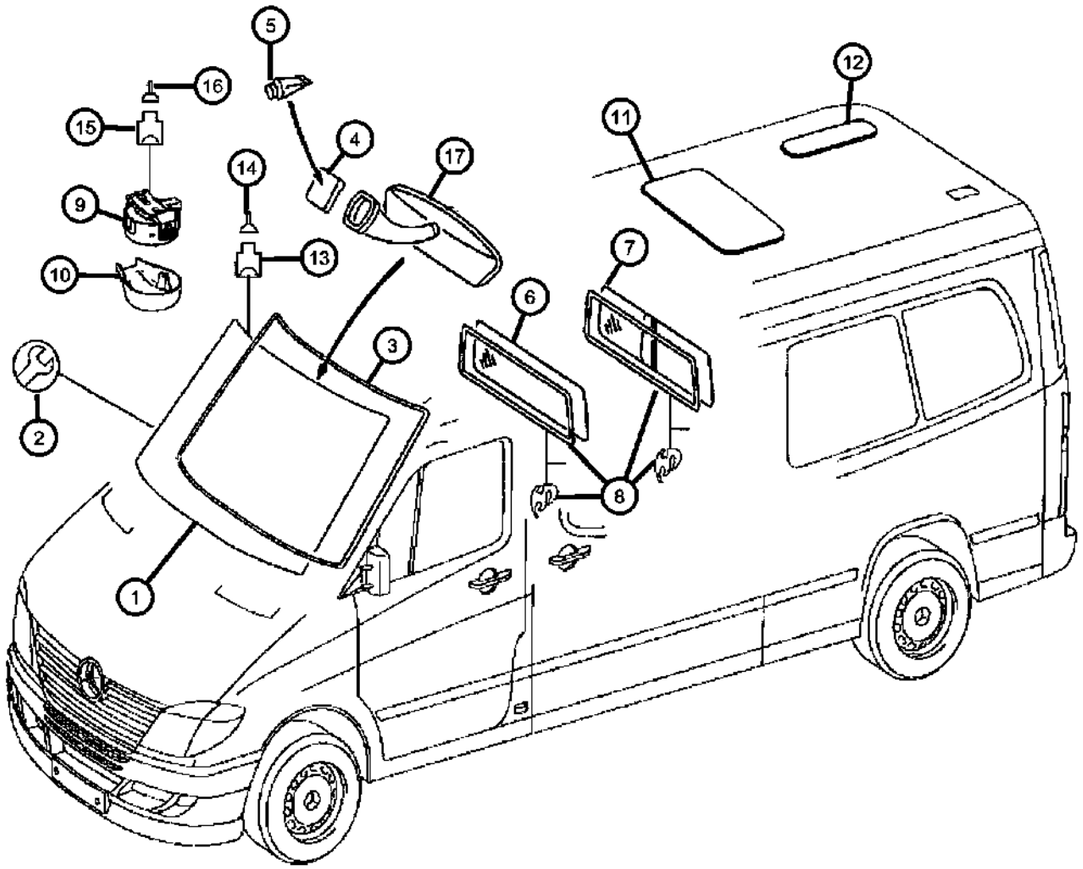

ITEM	PART NUMBER	QTY	LINE	SERIES	BODY	ENGINE	TRANS	TRIM	DESCRIPTION
NOTE:This Is The Rear Cargo Fixed Glass. This Is Not The Power Sun Roof Replacement Glass.									
1									WINDSHIELD
	68018758AA	1	2, 3, 6, 7	L					With [GBG + NHW]
	68018759AA	1	2, 3, 6, 7	L					With [GBE + NHW]
	68018760AA	1	2, 3, 6, 7	L					With [GBB] Or [GBE]
2	05104594AA	1	2, 3, 6, 7	L	13, 15, 17, 53, 55				REPAIR KIT, Windshield
3	68018762AA	1	2, 3, 6, 7	L					SEAL, Windshield
4	05104241AA	1	2, 3, 6, 7	L	13, 15, 17, 53, 55				BUTTON, Rear View Mirror
5	05125662AB	1	2, 3, 6, 7	L					ADHESIVE
6	05104249AA	1	2, 3, 6, 7	L	13, 15, 17				GLASS, Backlite, Fixed
7	05104236AA	1	2, 3, 6, 7	L	13, 15, 17				GLASS, Backlite, Sliding
8									WEATHERSTRIP
	05104250AA	1	2, 3, 6, 7	L	13, 15, 17				Fixed Rear Glass
	05104251AA	1	2, 3, 6, 7	L	13, 15, 17				Sliding Rear Glass
9	68013389AA	1	2, 3, 6, 7	L					SENSOR, Rain, With [NHW]
10	68013425AA	1	2, 3, 6, 7	L					COVER, With [NHM]
11	68018824AA	2	2, 3, 6, 7	L	13, 15, 17				GLASS, Sunroof, See NOTE: Fixed Rear Cargo Roof Glass, With [GFW] Without [MX2]
12	68018825AA	2	2, 3, 6, 7	L	15, 17				GLASS, Sunroof, See NOTE: Fixed Rear Cargo Roof Glass, With [GFW + MWJ]
13									CONNECTOR
	68011379AA	1	2, 3, 6, 7	L					[1 Pin; R22/2] With [NHW+GBG]
		1	2, 3, 6, 7	L					[1 Pin; R22/2] With [NHW]
14	05133379AA	AR	2, 3, 6, 7	L					TERMINAL, Male, [6.0 MM2; R22/2] With [NHW]
15	05120717AA	1	2, 3, 6, 7	L	13, 15, 17, 53, 55				CONNECTOR
16	05103873AA	AR	2, 3, 6, 7	L					TERMINAL, [0.75 MM2; MQS; B38/2]
17									MIRROR, Inside Rear View
	05104435AA	1	2, 3, 6, 7	L					With [GNA] Without [NHW]
	68017272AA	1	2, 3, 6, 7	L					With [GNA + NHW]

SPRINTER (VB)

SERIES	LINE	BODY	ENGINE	TRANSMISSION
L = LOWLINE	3 = HD DODGE 2WD 6 = Lt. Duty DODGE 4WD 2 = Med. Duty DODGE 2WD 7 = Med. Duty DODGE 4WD	17 = VAN WHEEL BASE 7 55 = WAGON WHEEL BASE 5 15 = VAN WHEEL BASE 5 53 = 119 WB 13 = 119 WB 05 = CAB CHASSIS WHEEL BASE 5 03 = CAB CHASSIS WHEEL BASE 3	EG2 = 3.5L V6 Gas Engine EXM = 3.0L V6 Turbo Diesel Engine	DGZ = 5-Speed Auto W5A380 Transmission

Windshield
Figure 27-115

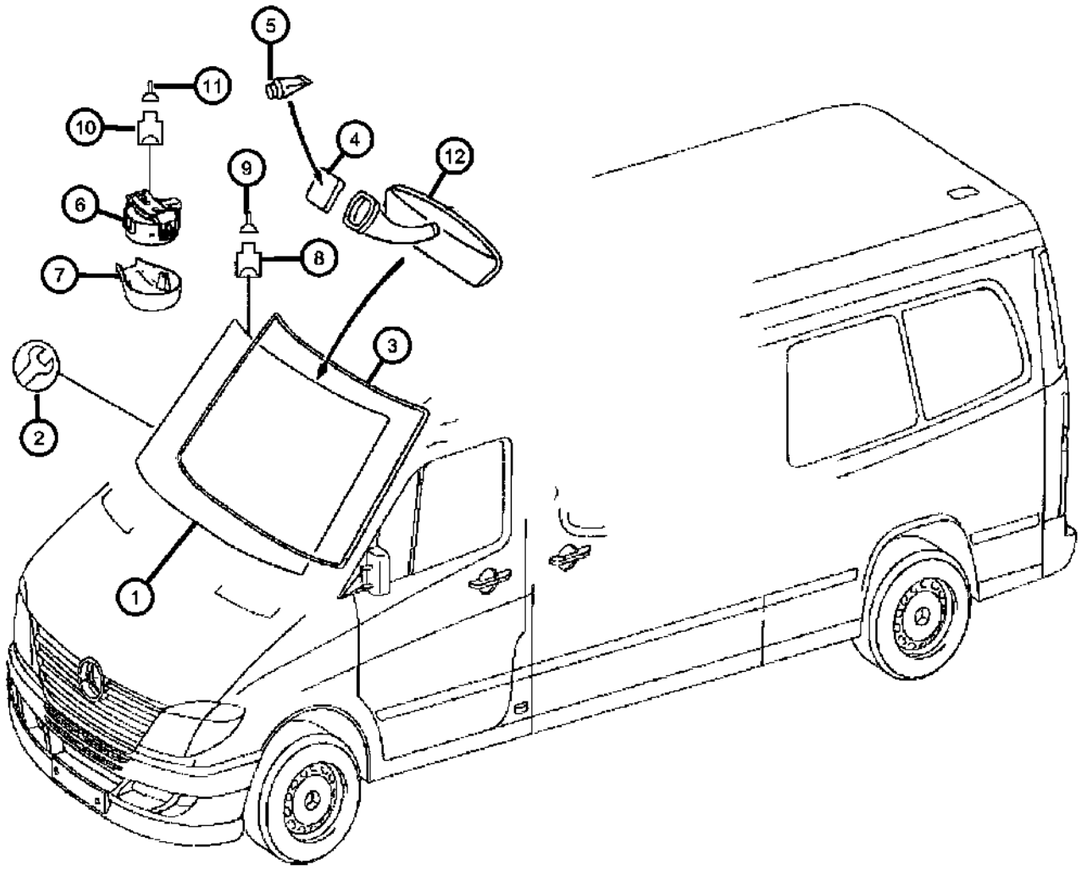

ITEM	PART NUMBER	QTY	LINE	SERIES	BODY	ENGINE	TRANS	TRIM	DESCRIPTION
1									WINDSHIELD
	68018758AA	1	2, 3, 6, 7	L					With [GBG + NHW]
	68018759AA	1	2, 3, 6, 7	L					With [GBE + NHW]
	68018760AA	1	2, 3, 6, 7	L					With [GBB] Or With [GBE]
2	05104594AA	1	2, 3, 6, 7	L	13, 15, 17, 53, 55				REPAIR KIT, Windshield
3	68018762AA	1	2, 3, 6, 7	L					SEAL, Windshield
4	05104241AA	1	2, 3, 6, 7	L	13, 15, 17, 53, 55				BUTTON, Rear View Mirror
5	05125662AB	1	6, 7, 2, 3	L					ADHESIVE
6	68013389AA	1	2, 3, 6, 7	L					SENSOR, Rain, With [NHW]
7	68013425AA	1	2, 3, 6, 7	L					COVER, With [NHM]
8									CONNECTOR
	68011379AA	1	2, 3, 6, 7	L					[1 Pin; R22/2] With [NHW+GBG]
		1	2, 3, 6, 7	L					[1 Pin; R22/2] With [NHW]
9	05133379AA	AR	2, 3, 6, 7	L					TERMINAL, Male, [6.0 MM2; R22/2] With [NHW]
10	05120717AA	1	2, 3, 6, 7	L	13, 15, 17, 53, 55				CONNECTOR
11	05103873AA	AR	2, 3, 6, 7	L					TERMINAL, [0.75 MM2; MQS; B38/2]
12									MIRROR, Inside Rear View
	05104435AA	1	2, 3, 6, 7	L					With [GNA] Without [NHW]
	68017272AA	1	2, 3, 6, 7	L					With [GNA + NHW]

SPRINTER (VB)

SERIES	LINE	BODY	ENGINE	TRANSMISSION
L = LOWLINE	3 = HD DODGE 2WD 6 = Lt. Duty DODGE 4WD 2 = Med. Duty DODGE 2WD 7 = Med. Duty DODGE 4WD	17 = VAN WHEEL BASE 7 55 = WAGON WHEEL BASE 5 15 = VAN WHEEL BASE 5 53 = 119 WB 13 = 119 WB 05 = CAB CHASSIS WHEEL BASE 5 03 = CAB CHASSIS WHEEL BASE 3	EG2 = 3.5L V6 Gas Engine EXM = 3.0L V6 Turbo Diesel Engine	DGZ = 5-Speed Auto W5A380 Transmission

Rear Cargo Door Glass
Figure 27-120

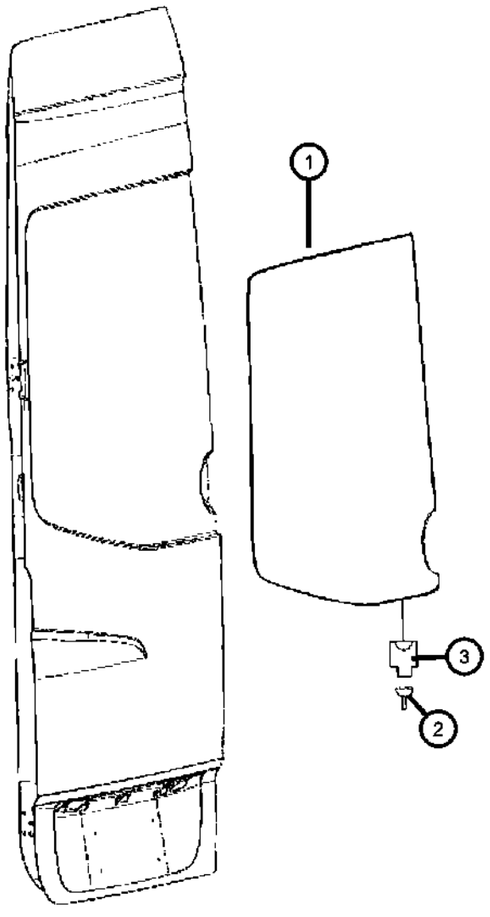

ITEM	PART NUMBER	QTY	LINE	SERIES	BODY	ENGINE	TRANS	TRIM	DESCRIPTION
1									GLASS, Cargo Door
	68006474AA	1	2, 3, 6, 7	L	13, 15, 17, 53, 55				Left
	68006475AA	1	2, 3, 6, 7	L	55, 13, 15, 17, 53				With [GFA], Left
	68006477AA	1	2, 3, 6, 7	L	13, 15, 17, 53, 55				With [GAE + GFA], Left
	68006582AA	1	2, 3, 6, 7	L	13, 15, 17, 53, 55				Right
	68006583AA	1	2, 3, 6, 7	L	13, 15, 17, 53, 55				With [GFA], Right
	68006585AA	1	2, 3, 6, 7	L	13, 15, 17, 53, 55				With [GAE + GFA], Right
2	05133366AA	99	2, 3, 6, 7	L	13, 15, 17, 53, 55				TERMINAL, Male
3	05103858AA	4	2, 3, 6, 7	L	55, 13, 15, 17, 53				CONNECTOR

SPRINTER (VB)

SERIES	LINE	BODY	ENGINE	TRANSMISSION
L = LOWLINE	3 = HD DODGE 2WD 6 = Lt. Duty DODGE 4WD 2 = Med. Duty DODGE 2WD 7 = Med. Duty DODGE 4WD	17 = VAN WHEEL BASE 7 55 = WAGON WHEEL BASE 5 15 = VAN WHEEL BASE 5 53 = 119 WB 13 = 119 WB 05 = CAB CHASSIS WHEEL BASE 5 03 = CAB CHASSIS WHEEL BASE 3	EG2 = 3.5L V6 Gas Engine EXM = 3.0L V6 Turbo Diesel Engine	DGZ = 5-Speed Auto W5A380 Transmission

Sliding Door Glass
Figure 27-125

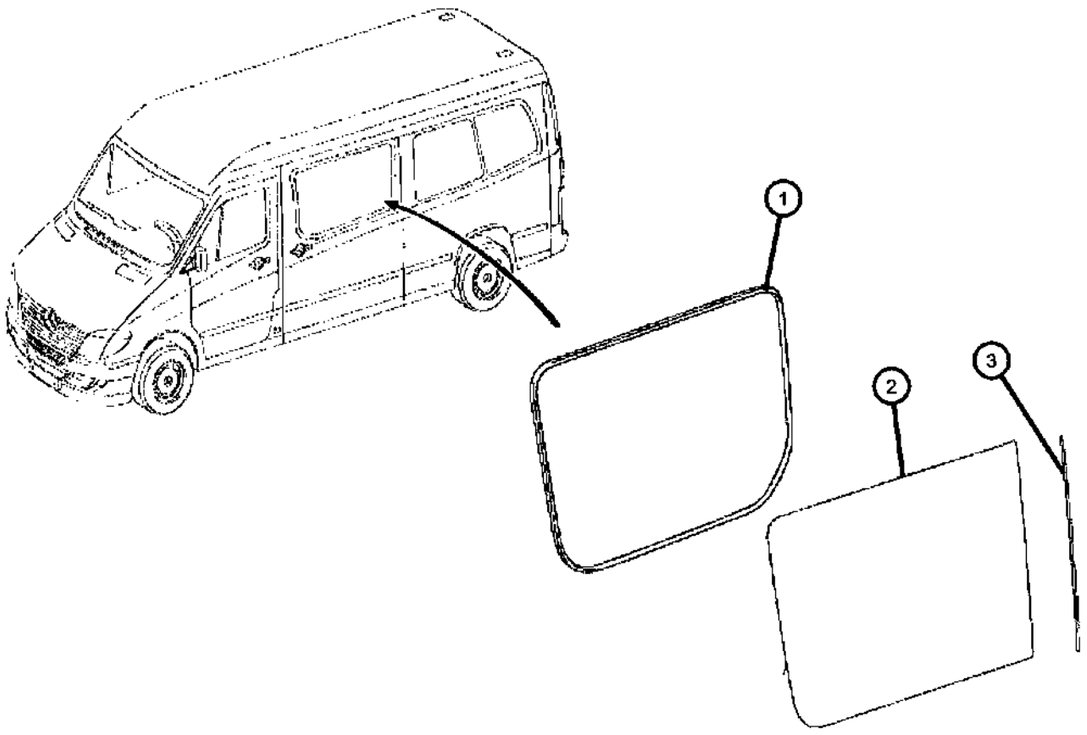

ITEM	PART NUMBER	QTY	LINE	SERIES	BODY	ENGINE	TRANS	TRIM	DESCRIPTION
1	68010256AA	1	2, 3, 6, 7	L	13, 15, 17, 53, 55				WEATHERSTRIP, Sliding Door
2									GlassRight & Left, Sliding, Door
	68010247AA	1	2, 3, 6, 7	L	15, 17, 53, 13, 55				GLASS, Sliding Door Right
	68010248AA	1	2, 3, 6, 7	L	13, 15, 17, 53, 55				With [GAE], Right
	68017376AA	1	2, 3, 6, 7	L	13, 15, 17, 53, 55				Left
	68017377AA	1	2, 3, 6, 7	L	13, 15, 17, 53, 55				With [GAE], Left
3	68010255AA	1	2, 3, 6, 7	L					SEAL

SPRINTER (VB)

SERIES	LINE	BODY	ENGINE	TRANSMISSION
L = LOWLINE	3 = HD DODGE 2WD 6 = Lt. Duty DODGE 4WD 2 = Med. Duty DODGE 2WD 7 = Med. Duty DODGE 4WD	17 = VAN WHEEL BASE 7 55 = WAGON WHEEL BASE 5 15 = VAN WHEEL BASE 5 53 = 119 WB 13 = 119 WB 05 = CAB CHASSIS WHEEL BASE 5 03 = CAB CHASSIS WHEEL BASE 3	EG2 = 3.5L V6 Gas Engine EXM = 3.0L V6 Turbo Diesel Engine	DGZ = 5-Speed Auto W5A380 Transmission

Driver & Passenger Door Glass
Figure 27-130

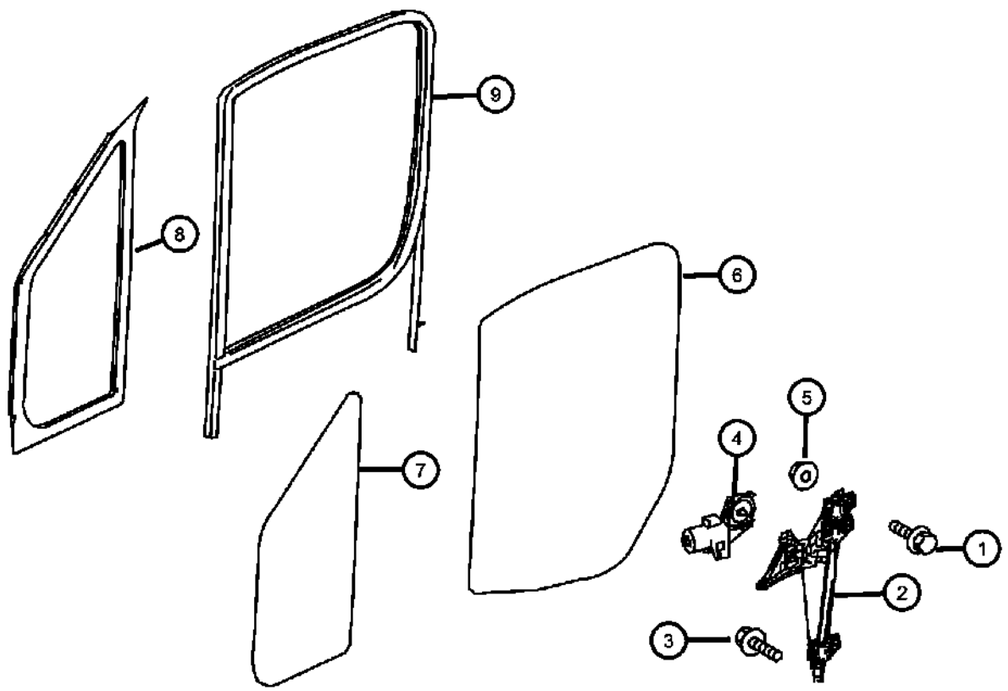

ITEM	PART NUMBER	QTY	LINE	SERIES	BODY	ENGINE	TRANS	TRIM	DESCRIPTION
1									BOLT
	06104004AA	2	2, 3, 6, 7	L	13, 15, 17, 53, 55				M6x12
		1	2, 3, 6, 7	L					M6x12
2									REGULATOR, Front Door Window
	68010026AA	1	2, 3, 6, 7	L					Left
	68010110AA	1	2, 3, 6, 7	L					Right
3	68010027AA	3	2, 3, 6, 7	L					SCREW, Motor at Window Lifter, Right & Left
4									MOTOR, Window Regulator, Front Door
	68010028AA	1	7, 3	L	03, 05				Right
		1	2, 3, 6, 7	L	13, 15, 17, 53, 55				Right
	68010029AA	1	3, 7	L	03, 05				Left
		1	2, 3, 6, 7	L	13, 15, 17, 53, 55				Left
5									NUT, Hex
	05097674AA	2	3, 7	L	03, 05				Door Power Window M6, Right & Left
		2	2, 3, 6, 7	L	13, 15, 17, 53, 55				Door Power Window M6, Right & Left
6									GLASS, Front Door
	68010025AA	1	2, 3, 6, 7	L					Heat Absorbing, Left
	68010109AA	1	2, 3, 6, 7	L					Heat Absorbing, Right
7									GLASS, Front Door Vent
	68010022AA	1	2, 3, 6, 7	L					Left
	68010106AA	1	2, 3, 6, 7	L					Right
8									SEAL, Window Opening
	68010023AA	1	3, 7	L	03, 05				Left
		1	2, 3, 6, 7	L	13, 15, 17, 53, 55				Left
	68010107AA	1	3, 7	L	03, 05				Right
		1	2, 3, 6, 7	L	13, 15, 17, 53, 55				Right
9									FRAME, Door Glass

SPRINTER (VB)

SERIES	LINE	BODY	ENGINE	TRANSMISSION
L = LOWLINE	3 = HD DODGE 2WD 6 = Lt. Duty DODGE 4WD 2 = Med. Duty DODGE 2WD 7 = Med. Duty DODGE 4WD	17 = VAN WHEEL BASE 7 55 = WAGON WHEEL BASE 5 15 = VAN WHEEL BASE 5 53 = 119 WB 13 = 119 WB 05 = CAB CHASSIS WHEEL BASE 5 03 = CAB CHASSIS WHEEL BASE 3	EG2 = 3.5L V6 Gas Engine EXM = 3.0L V6 Turbo Diesel Engine	DGZ = 5-Speed Auto W5A380 Transmission

Driver & Passenger Door Glass
Figure 27-130

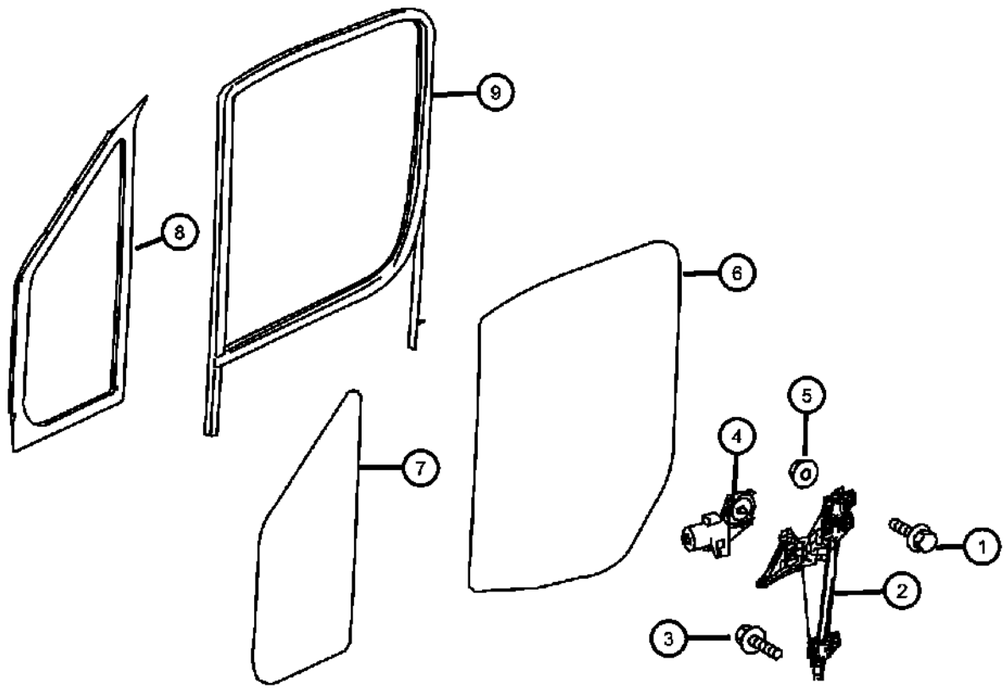

ITEM	PART NUMBER	QTY	LINE	SERIES	BODY	ENGINE	TRANS	TRIM	DESCRIPTION
	68010030AA	1	2, 3, 6, 7	L					Left Door
	68010111AA	1	2, 3, 6, 7	L					Right Door

SPRINTER (VB)

SERIES	LINE	BODY	ENGINE	TRANSMISSION
L = LOWLINE	3 = HD DODGE 2WD 6 = Lt. Duty DODGE 4WD 2 = Med. Duty DODGE 2WD 7 = Med. Duty DODGE 4WD	17 = VAN WHEEL BASE 7 55 = WAGON WHEEL BASE 5 15 = VAN WHEEL BASE 5 53 = 119 WB 13 = 119 WB 05 = CAB CHASSIS WHEEL BASE 5 03 = CAB CHASSIS WHEEL BASE 3	EG2 = 3.5L V6 Gas Engine EXM = 3.0L V6 Turbo Diesel Engine	DGZ = 5-Speed Auto W5A380 Transmission

Fixed Glass Without Sliding Door
Figure 27-135

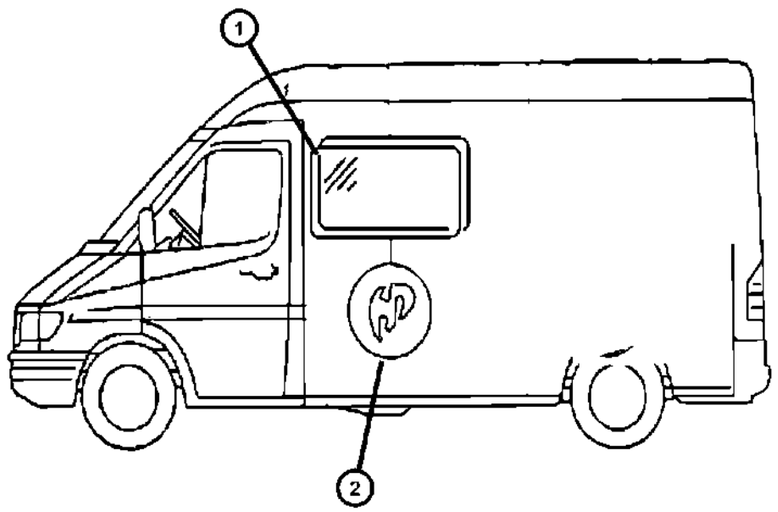

ITEM	PART NUMBER	QTY	LINE	SERIES	BODY	ENGINE	TRANS	TRIM	DESCRIPTION
Note:Fixed Glass Only Without Sliding Door									
1									GLASS, Bodyside Window, See Note
	68018764AA	1	2, 3, 6, 7	L	15, 17, 53, 55, 13				Left
	68018765AA	1	2, 3, 6, 7	L	13, 15, 17, 53, 55				With [GAE], Left
	68018767AA	1	2, 3, 6, 7	L	13, 15, 17				Right
	68018768AA	1	2, 3, 6, 7	L	13, 15, 17				With [GAE]
2	68018791AA	1	2, 3, 6, 7	L	13, 15, 17, 53, 55				SEAL, Window OpeningRight & Left

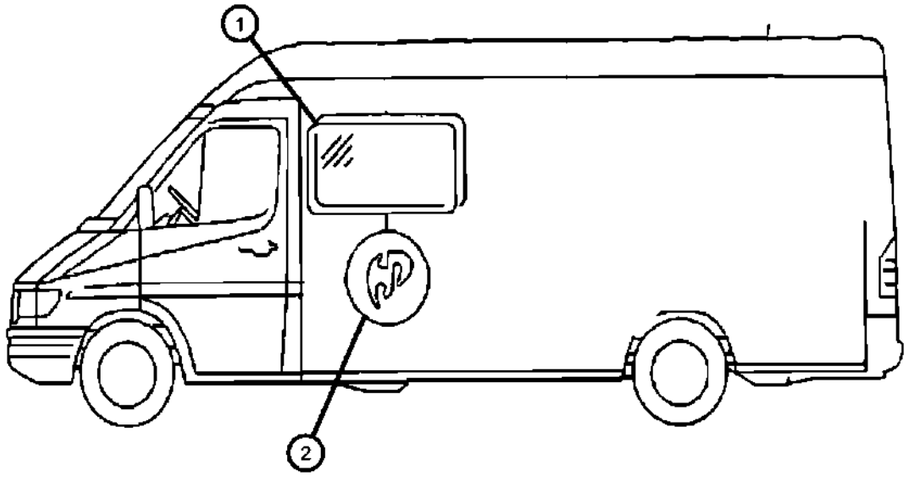

SPRINTER (VB)

SERIES	LINE	BODY	ENGINE	TRANSMISSION
L = LOWLINE	3 = HD DODGE 2WD 6 = Lt. Duty DODGE 4WD 2 = Med. Duty DODGE 2WD 7 = Med. Duty DODGE 4WD	17 = VAN WHEEL BASE 7 55 = WAGON WHEEL BASE 5 15 = VAN WHEEL BASE 5 53 = 119 WB 13 = 119 WB 05 = CAB CHASSIS WHEEL BASE 5 03 = CAB CHASSIS WHEEL BASE 3	EG2 = 3.5L V6 Gas Engine EXM = 3.0L V6 Turbo Diesel Engine	DGZ = 5-Speed Auto W5A380 Transmission

Rear Side Glass
Figure 27-140

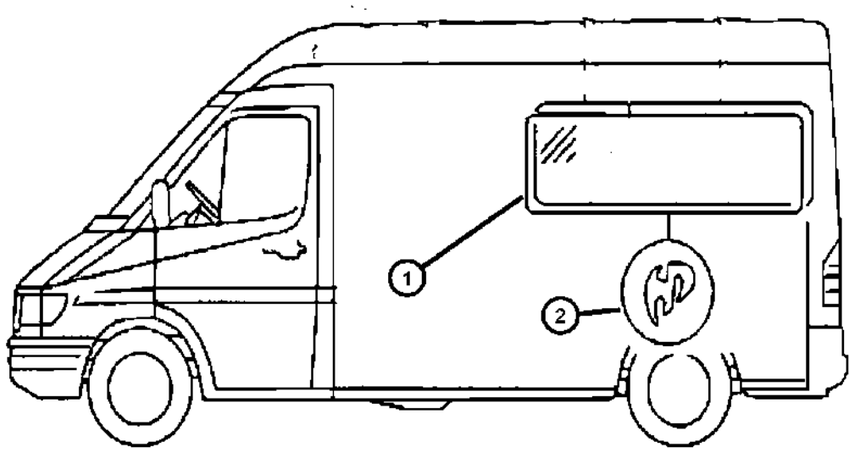

ITEM	PART NUMBER	QTY	LINE	SERIES	BODY	ENGINE	TRANS	TRIM	DESCRIPTION
1									GLASS, Quarter
	68018781AA	1	2, 3, 6, 7	L	13				With [GES + GKE], Left
	68018782AA	1	2, 3, 6, 7	L	13, 53				With [GES] Without [GKE], Left
	68018783AA	1	2, 3, 6, 7	L	13				With [GES + GAE + GKE], Left
	68018784AA	1	2, 3, 6, 7	L	13, 53				With [GES + GAE] Without [GKE], Left
	68018787AA	1	2, 3, 6, 7	L	13, 53				With [GKA + GEU], Right
	68018788AA	1	2, 3, 6, 7	L	13				With [GEU + GK9], Right
	68018789AA	1	2, 3, 6, 7	L	13, 53				With [GKA + GEU + GAE], Right
	68018790AA	1	2, 3, 6, 7	L	13				With [GK9 + GEU + GAE], Right
2	68018797AA	1	2, 3, 6, 7	L	13, 53				SEAL, Window OpeningRight & Left

SPRINTER (VB)

SERIES	LINE	BODY	ENGINE	TRANSMISSION
L = LOWLINE	3 = HD DODGE 2WD 6 = Lt. Duty DODGE 4WD 2 = Med. Duty DODGE 2WD 7 = Med. Duty DODGE 4WD	17 = VAN WHEEL BASE 7 55 = WAGON WHEEL BASE 5 15 = VAN WHEEL BASE 5 53 = 119 WB 13 = 119 WB 05 = CAB CHASSIS WHEEL BASE 5 03 = CAB CHASSIS WHEEL BASE 3	EG2 = 3.5L V6 Gas Engine EXM = 3.0L V6 Turbo Diesel Engine	DGZ = 5-Speed Auto W5A380 Transmission

Rear Side And Quarter Glass
Figure 27-145

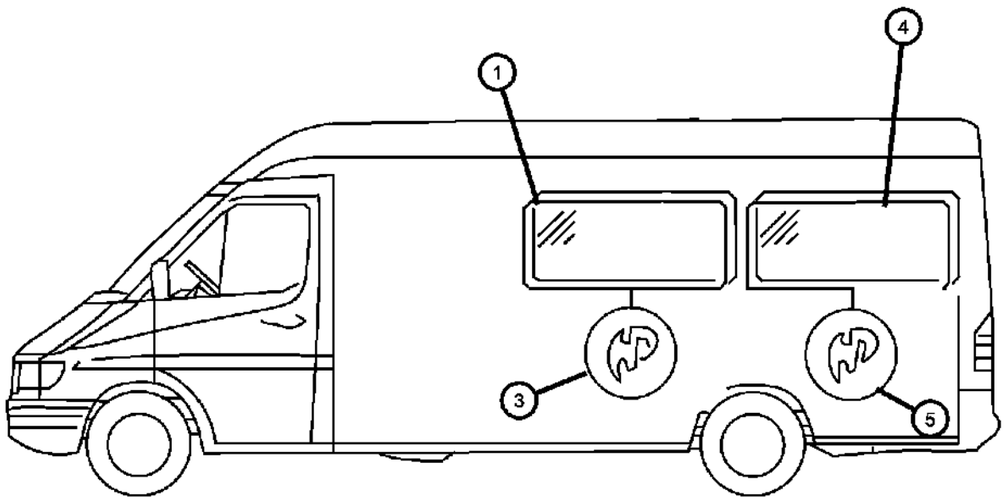

ITEM	PART NUMBER	QTY	LINE	SERIES	BODY	ENGINE	TRANS	TRIM	DESCRIPTION
1									GLASS, Bodyside Window
	68018771AA	1	2, 3, 6, 7	L	15, 17, 55				With [GEL] Without [GKE], Left
	68018772AA	1	2, 3, 6, 7	L	15, 17				With [GEL + GAE + GKE], Left
	68018773AA	1	2, 3, 6, 7	L	15, 17, 55				With [GEL + GAE] Without [GKE], Left
	68018774AA	1	2, 3, 6, 7	L	13, 15, 17, 53, 55				With [GMA] Only
	68018775AA	1	2, 3, 6, 7	L	15, 17, 55				With [GKA + GEQ], Right
	68018776AA	1	2, 3, 6, 7	L	15, 17				With [GK9 + GEQ], Right
	68018777AA	1	2, 3, 6, 7	L	15, 17, 55				With [GKA + GEQ + GKE], Right
	68018778AA	1	2, 3, 6, 7	L	15, 17				With [GK9 + GAE + GEQ], Right
	68018770AA	1	2, 3, 6, 7	L	15, 17				With [GKE + GEL], Left
-2	1KT94NCVAA	5	2, 6	L	55				CAP, With [GMA] Protective Caps For Screws / Emergency Window Only
3									SEAL, Window Opening
	68018793AA	1	2, 3, 6, 7	L	15, 17, 55				
	68018799AA	1	2, 3, 6, 7	L	13, 15, 17, 53, 55				With [GMA] Only
4									GLASS, Quarter
	68018779AA	1	2, 3, 6, 7	L	15, 17, 55				With [GES], Left
	68018780AA	1	2, 3, 6, 7	L	15, 17, 55				With [GES + GAE], Left
	68018785AA	1	2, 3, 6, 7	L	15, 17, 55				With [GEU], Right
	68018786AA	1	2, 3, 6, 7	L	15, 17, 55				With [GEU + GAE], Right
5	68018795AA	1	2, 3, 6, 7	L	15, 17, 55				SEAL, Window Opening

SPRINTER (VB)

SERIES	LINE	BODY	ENGINE	TRANSMISSION
L = LOWLINE	3 = HD DODGE 2WD 6 = Lt. Duty DODGE 4WD 2 = Med. Duty DODGE 2WD 7 = Med. Duty DODGE 4WD	17 = VAN WHEEL BASE 7 55 = WAGON WHEEL BASE 5 15 = VAN WHEEL BASE 5 53 = 119 WB 13 = 119 WB 05 = CAB CHASSIS WHEEL BASE 5 03 = CAB CHASSIS WHEEL BASE 3	EG2 = 3.5L V6 Gas Engine EXM = 3.0L V6 Turbo Diesel Engine	DGZ = 5-Speed Auto W5A380 Transmission

Window & Head Side Airbag
Figure 27-150

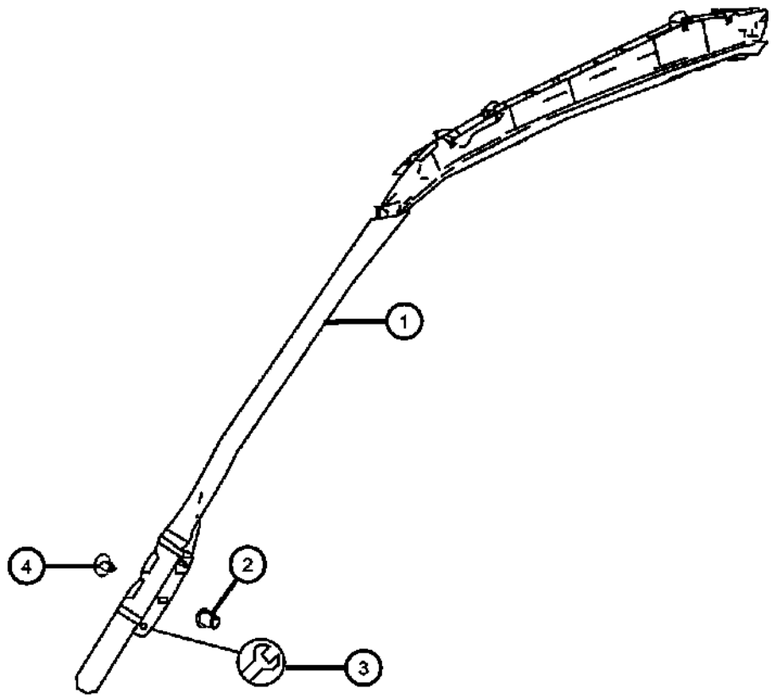

ITEM	PART NUMBER	QTY	LINE	SERIES	BODY	ENGINE	TRANS	TRIM	DESCRIPTION
1									AIR BAG, Side Curtain
	1HD69NC-VAA	1	2, 3, 6, 7	L					Left
	1HD70NC-VAA	1	2, 3, 6, 7	L					Right
2	05133486AA	4	2, 3, 6, 7	L					RIVET
3	68016751AA	2	2, 3, 6, 7	L					CONNECTOR
4	68014337AA	8	2, 3, 6, 7	L					SCREW

SPRINTER (VB)

SERIES	LINE	BODY	ENGINE	TRANSMISSION
L = LOWLINE	3 = HD DODGE 2WD 6 = Lt. Duty DODGE 4WD 2 = Med. Duty DODGE 2WD 7 = Med. Duty DODGE 4WD	17 = VAN WHEEL BASE 7 55 = WAGON WHEEL BASE 5 15 = VAN WHEEL BASE 5 53 = 119 WB 13 = 119 WB 05 = CAB CHASSIS WHEEL BASE 5 03 = CAB CHASSIS WHEEL BASE 3	EG2 = 3.5L V6 Gas Engine EXM = 3.0L V6 Turbo Diesel Engine	DGZ = 5-Speed Auto W5A380 Transmission

Group - 30

Doors, Door Mirrors and Related Parts

Group - 30 Doors, Door Mirrors and Related Parts

Illustration Title — Group-Fig. No.

Front Door
Front Door ..... Fig. 30 - 110
Front Door - Window Regulator & Glass 2500/3500 Series ..... Fig. 30 - 120
Door Handle & Lock Set ..... Fig. 30 - 130
Door Panelling ..... Fig. 30 - 140

Rear Door
Rear Door, Shell ..... Fig. 30 - 205
Rear Door, Hindges ..... Fig. 30 - 210

Sliding Cargo Door
Sliding Door ..... Fig. 30 - 305
Door Drive Mechanism ..... Fig. 30 - 310
Sliding Door Rail & Suspension ..... Fig. 30 - 320
Sliding Door , Inside Handle & Locking System ..... Fig. 30 - 330

Dual and Single Cargo Door
Dual Door, Hardware Components ..... Fig. 30 - 420
Dual Door,Hardware Components ..... Fig. 30 - 430
Dual Door Hardware Components ..... Fig. 30 - 440

Exterior Mirror
Mirror, Exterior, Outside Rear View Mirror ..... Fig. 30 - 510

030-100 Front Door 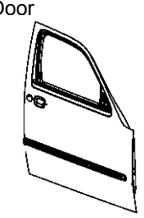	**030-200** Rear Door 	**030-300** Sliding Cargo Door 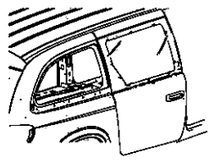	**030-400** Dual and Single Cargo Door
030-500 Exterior Mirror 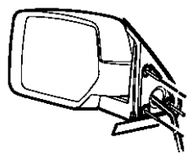			

Front Door
Figure 30-110

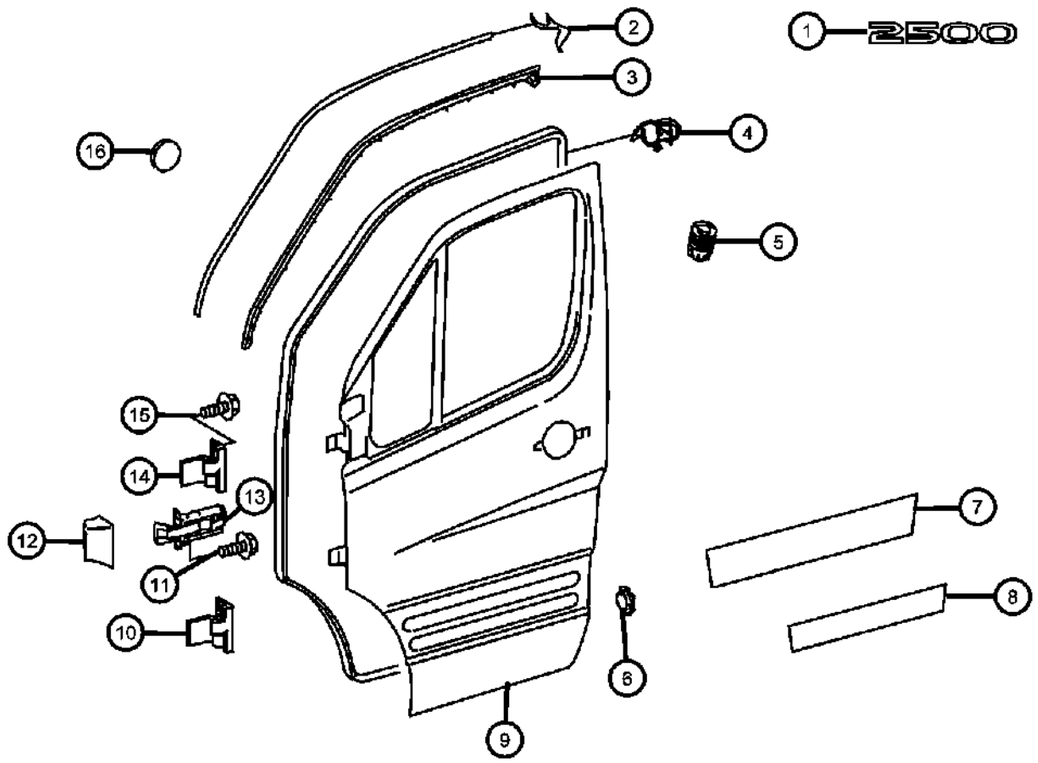

ITEM	PART NUMBER	QTY	LINE	SERIES	BODY	ENGINE	TRANS	TRIM	DESCRIPTION
1	55077331AB	2	2	L	13, 15, 17, 53, 55				NAMEPLATE, Ram 2500
2	68005103AA	1	2, 3, 6, 7	L					SEAL, Door, Top, Right Door
3	68009959AA	1	2, 3, 6, 7	L					SEAL, Door, Front, Left Door
4	68014670AA	2	2, 3, 6, 7	L					SEAL, Door
5	05104944AA	1	2, 3, 6, 7	L	13, 15, 17, 53, 55				BUMPER, Door, Door Rear, Bottom Left
6									PLUG, Body
	68006360AA	5	2, 3, 6, 7	L	13, 15, 17, 53, 55				
		1	3, 7	L	03, 05				
7	68009713AA	1	2, 3, 6, 7	L					INSULATION, Top, Left Door
8	68006519AA	1	2, 3, 6, 7	L	13, 15, 17, 53, 55				INSULATIONLeft Door
9									DOOR, Front
	68009944AA	1	2, 3, 6, 7	L					Left
	68010067AA	1	2, 3, 6, 7	L					Right
10									HINGE, Door
	68010074AA	1	3, 7	L	03, 05				Bottom Right
		1	2, 3, 6, 7	L	13, 15, 17, 53, 55				Bottom Right
11	68018257AA	3	2, 3, 6, 7	L					SCREW
12	68009967AA	2	2, 3, 6, 7	L					SEAL, Door Check
13									CHECK, Front Door
	68009966AA	1	3, 7	L	03, 05				
		1	2, 3, 6, 7	L	13, 15, 17, 53, 55				
14									HINGE, Door
	68009954AA	1	3, 7	L	03, 05				Top Left
		1	2, 3, 6, 7	L	13, 15, 17, 53, 55				Top Left
	68010073AA	1	3, 7	L	03, 05				Top Right
		1	2, 3, 6, 7	L	13, 15, 17, 53, 55				Top Right
15	06104076AA	3	2, 3, 6, 7	L					BOLT, Torx, M6X1.00X16.00, Hinge Top Left
16									FOIL, Insulator

SPRINTER (VB)

SERIES	LINE	BODY	ENGINE	TRANSMISSION
L = LOWLINE	3 = HD DODGE 2WD 6 = Lt. Duty DODGE 4WD 2 = Med. Duty DODGE 2WD 7 = Med. Duty DODGE 4WD	17 = VAN WHEEL BASE 7 55 = WAGON WHEEL BASE 5 15 = VAN WHEEL BASE 5 53 = 119 WB 13 = 119 WB 05 = CAB CHASSIS WHEEL BASE 5 03 = CAB CHASSIS WHEEL BASE 3	EG2 = 3.5L V6 Gas Engine EXM = 3.0L V6 Turbo Diesel Engine	DGZ = 5-Speed Auto W5A380 Transmission

Front Door
Figure 30-110

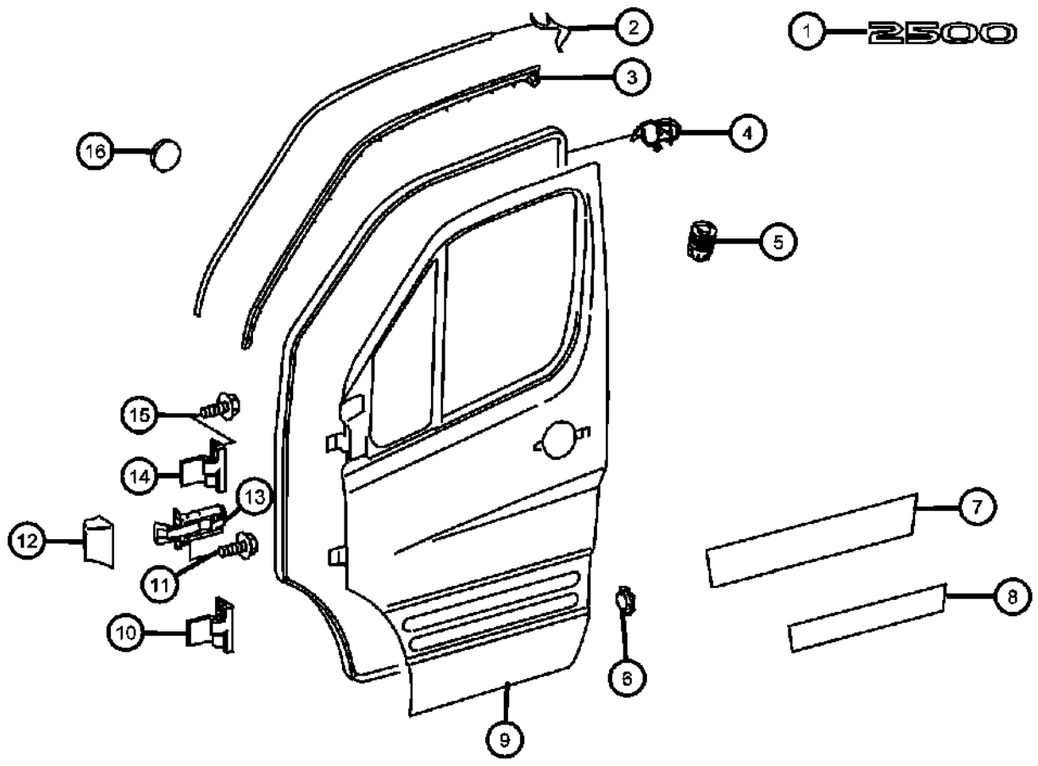

ITEM	PART NUMBER	QTY	LINE	SERIES	BODY	ENGINE	TRANS	TRIM	DESCRIPTION
	05099253AA	1	2, 3, 6, 7	L	13, 15, 17, 53, 55				22MM
		1	3, 7	L	03, 05				22MM

SPRINTER (VB)

SERIES	LINE	BODY	ENGINE	TRANSMISSION
L = LOWLINE	3 = HD DODGE 2WD 6 = Lt. Duty DODGE 4WD 2 = Med. Duty DODGE 2WD 7 = Med. Duty DODGE 4WD	17 = VAN WHEEL BASE 7 55 = WAGON WHEEL BASE 5 15 = VAN WHEEL BASE 5 53 = 119 WB 13 = 119 WB 05 = CAB CHASSIS WHEEL BASE 5 03 = CAB CHASSIS WHEEL BASE 3	EG2 = 3.5L V6 Gas Engine EXM = 3.0L V6 Turbo Diesel Engine	DGZ = 5-Speed Auto W5A380 Transmission

Front Door - Window Regulator & Glass 2500/3500 Series
Figure 30-120

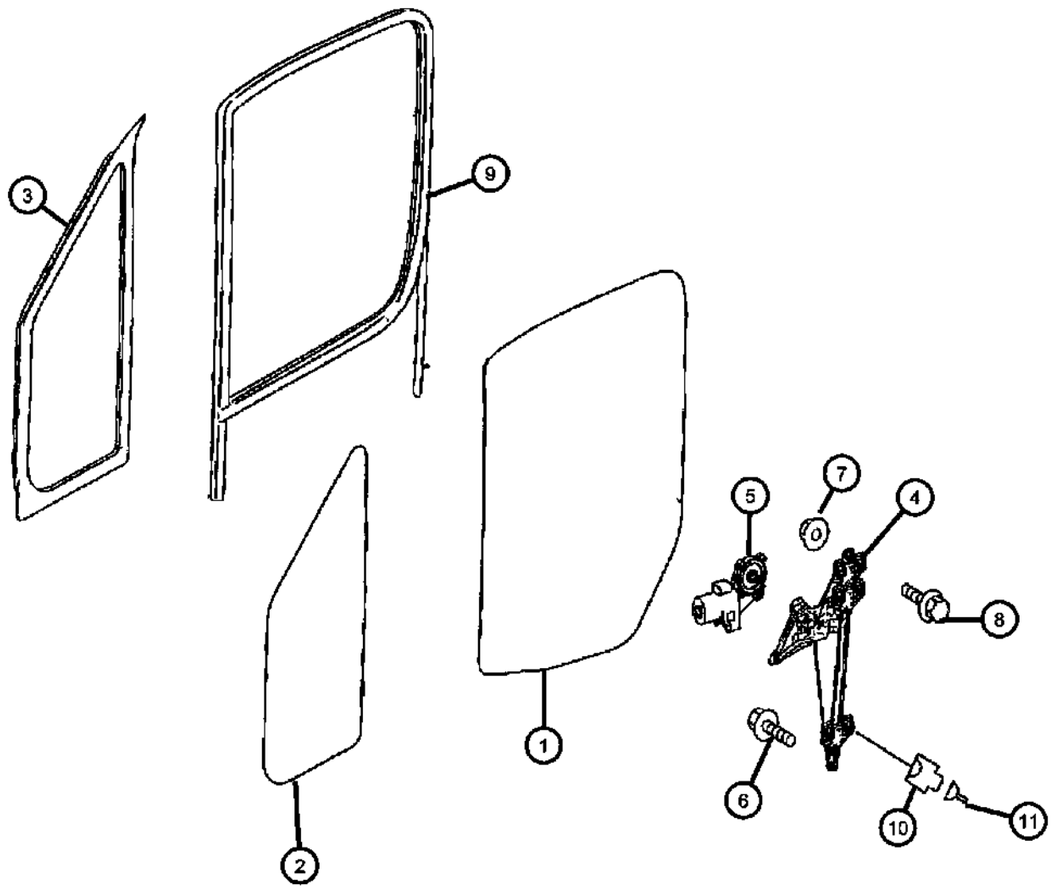

ITEM	PART NUMBER	QTY	LINE	SERIES	BODY	ENGINE	TRANS	TRIM	DESCRIPTION
1									GLASS, Front Door
	68010025AA	1	2, 3, 6, 7	L					Left
	68010109AA	1	2, 3, 6, 7	L					Right
2									GLASS, Front Door Vent
	68010106AA	1	2, 3, 6, 7	L					Right
	68010022AA	1	2, 3, 6, 7	L					Left
3									SEAL, Window Opening
	68010023AA	1	3, 7	L	03, 05				Left
		1	2, 3, 6, 7	L	13, 15, 17, 53, 55				Left
	68010107AA	1	3, 7	L	03, 05				Right
		1	2, 3, 6, 7	L	13, 15, 17, 53, 55				Right
4									REGULATOR, Front Door Window
	68010026AA	1	2, 3, 6, 7	L					Left
	68010110AA	1	2, 3, 6, 7	L					Right
5									MOTOR, Window Regulator, Front Door
	68010028AA	1	3, 7	L	03, 05				Right
		1	2, 3, 6, 7	L	13, 15, 17, 53, 55				Right
	68010029AA	1	3, 7	L	03, 05				Left
		1	2, 3, 6, 7	L	13, 15, 17, 53, 55				Left
6	68010027AA	2	2, 3	L					SCREW, Motor To Window Regulator, Right & Left
7									NUT, Hex
	05097674AA	2	3, 7	L	03, 05				Window Regulator To Door, Right And Left
		2	2, 3, 6, 7	L	13, 15, 17, 53, 55				Window Regulator To Door, Right And Left
8	06104004AA	2	2, 3, 6, 7	L					BOLT, Window Regulator To Door
9									FRAME, Door Glass
	68010030AA	1	2, 3, 6, 7	L					Left
	68010111AA	1	2, 3, 6, 7	L					Right

SPRINTER (VB)

SERIES	LINE	BODY	ENGINE	TRANSMISSION
L = LOWLINE	3 = HD DODGE 2WD 6 = Lt. Duty DODGE 4WD 2 = Med. Duty DODGE 2WD 7 = Med. Duty DODGE 4WD	17 = VAN WHEEL BASE 7 55 = WAGON WHEEL BASE 5 15 = VAN WHEEL BASE 5 53 = 119 WB 13 = 119 WB 05 = CAB CHASSIS WHEEL BASE 5 03 = CAB CHASSIS WHEEL BASE 3	EG2 = 3.5L V6 Gas Engine EXM = 3.0L V6 Turbo Diesel Engine	DGZ = 5-Speed Auto W5A380 Transmission

Front Door - Window Regulator & Glass 2500/3500 Series
Figure 30-120

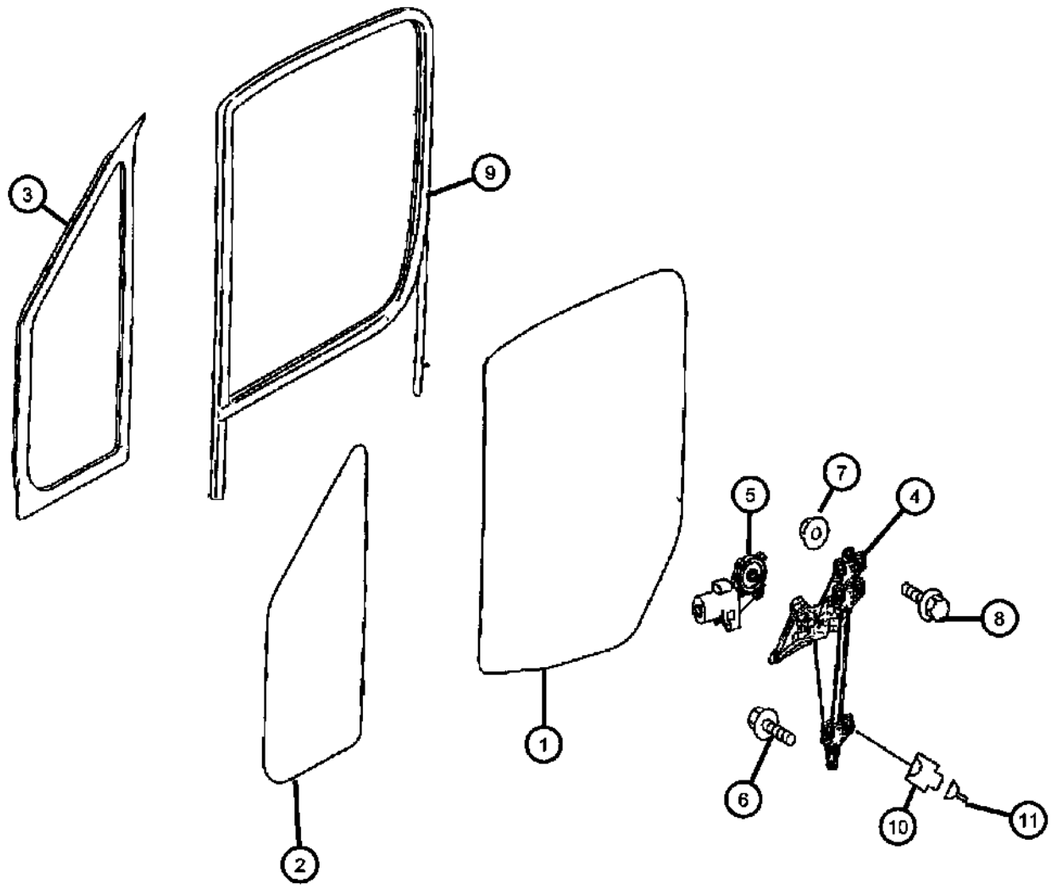

ITEM	PART NUMBER	QTY	LINE	SERIES	BODY	ENGINE	TRANS	TRIM	DESCRIPTION
10	68011302AA	1	2, 3, 6, 7	L					CONNECTOR, [2 Pin; M10/1], Right & Left
11	05133370AA	2	2, 3, 6, 7	L					TERMINAL, [1.5 - 2.5 MM2; JPT; M10/1]

SPRINTER (VB)

SERIES	LINE	BODY	ENGINE	TRANSMISSION
L = LOWLINE	3 = HD DODGE 2WD 6 = Lt. Duty DODGE 4WD 2 = Med. Duty DODGE 2WD 7 = Med. Duty DODGE 4WD	17 = VAN WHEEL BASE 7 55 = WAGON WHEEL BASE 5 15 = VAN WHEEL BASE 5 53 = 119 WB 13 = 119 WB 05 = CAB CHASSIS WHEEL BASE 5 03 = CAB CHASSIS WHEEL BASE 3	EG2 = 3.5L V6 Gas Engine EXM = 3.0L V6 Turbo Diesel Engine	DGZ = 5-Speed Auto W5A380 Transmission

AR = use ase required - = Non illustrrated part

Door Handle & Lock Set
Figure 30-130

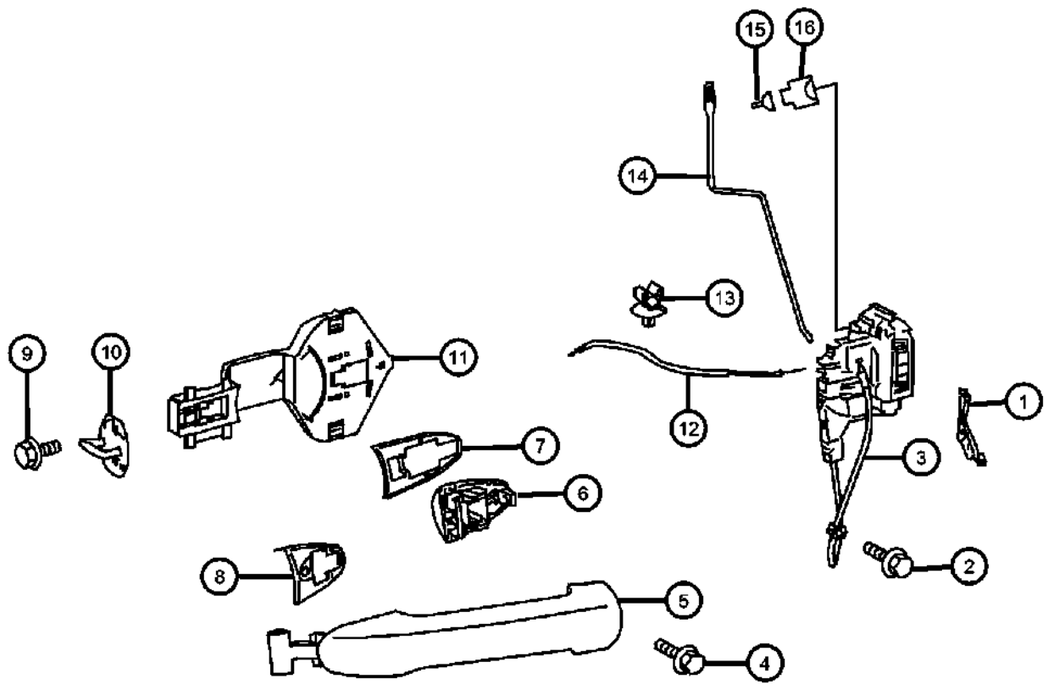

ITEM	PART NUMBER	QTY	LINE	SERIES	BODY	ENGINE	TRANS	TRIM	DESCRIPTION
1	68010017AA	1	2, 3, 6, 7	L					COVER, Lock Housing
2									SCREW, M6x16
	05101576AA	3	2, 3, 6, 7	L	13, 15, 17, 53, 55				M6x14
		3	3, 7	L	03, 05				M6x14
3									LATCH, Front Door
	68017889AA	1	2, 3, 6, 7	L					Left
	68017891AA	1	2, 3, 6, 7	L					Right
4									SCREW
	06104136AA	1	3, 7	L	03, 05				M5x16
		1	2, 3, 6, 7	L	13, 15, 17, 53, 55				M5x16
5	68010005AA	2	2, 3, 6, 7	L					HANDLE, Front Door
6									COVER
	68010099AA	1	3, 7	L	03, 05				
		1	2, 3, 6, 7	L	13, 15, 17, 53, 55				
7	68010009AA	1	2, 3, 6, 7	L					PADRear Left
8	68010008AA	1	2, 3, 6, 7	L					PADFront Left
9									SCREW
	05103715AA	2	2, 3, 6, 7	L	13, 15, 17, 53, 55				Locking Eye to Body M21-8.8
		2	3, 7	L	03, 05				Locking Eye to Body M21-8.8
10	68006469AA	1	2, 3, 6, 7	L					LATCH, Door, Right & Left
11									BRACKET, Door Handle
	68010006AA	1	2, 3, 6, 7	L					Right Door
	68010007AA	1	2, 3, 6, 7	L					Left Door
12									CABLE
	68010018AA	1	2, 3, 6, 7	L					Left Door
	68010104AA	1	2, 3, 6, 7	L					Right Door
13	68009854AA	1	2, 3, 6, 7	L					RETAINER
14									KNOB AND LINK, Door Latch
	68010015AA	1	2, 3, 6, 7	L					Left Door
	68010103AA	1	2, 3, 6, 7	L					Right Door

SPRINTER (VB)

SERIES	LINE	BODY	ENGINE	TRANSMISSION
L = LOWLINE	3 = HD DODGE 2WD 6 = Lt. Duty DODGE 4WD 2 = Med. Duty DODGE 2WD 7 = Med. Duty DODGE 4WD	17 = VAN WHEEL BASE 7 55 = WAGON WHEEL BASE 5 15 = VAN WHEEL BASE 5 53 = 119 WB 13 = 119 WB 05 = CAB CHASSIS WHEEL BASE 5 03 = CAB CHASSIS WHEEL BASE 3	EG2 = 3.5L V6 Gas Engine EXM = 3.0L V6 Turbo Diesel Engine	DGZ = 5-Speed Auto W5A380 Transmission

Door Handle & Lock Set
Figure 30-130

ITEM	PART NUMBER	QTY	LINE	SERIES	BODY	ENGINE	TRANS	TRIM	DESCRIPTION
15	05161599AA	AR	2, 3, 6, 7	L					SEAL, Wiring
16	68011245AA	1	2, 3, 6, 7	L					CONNECTOR, 4-Pin,M14/6

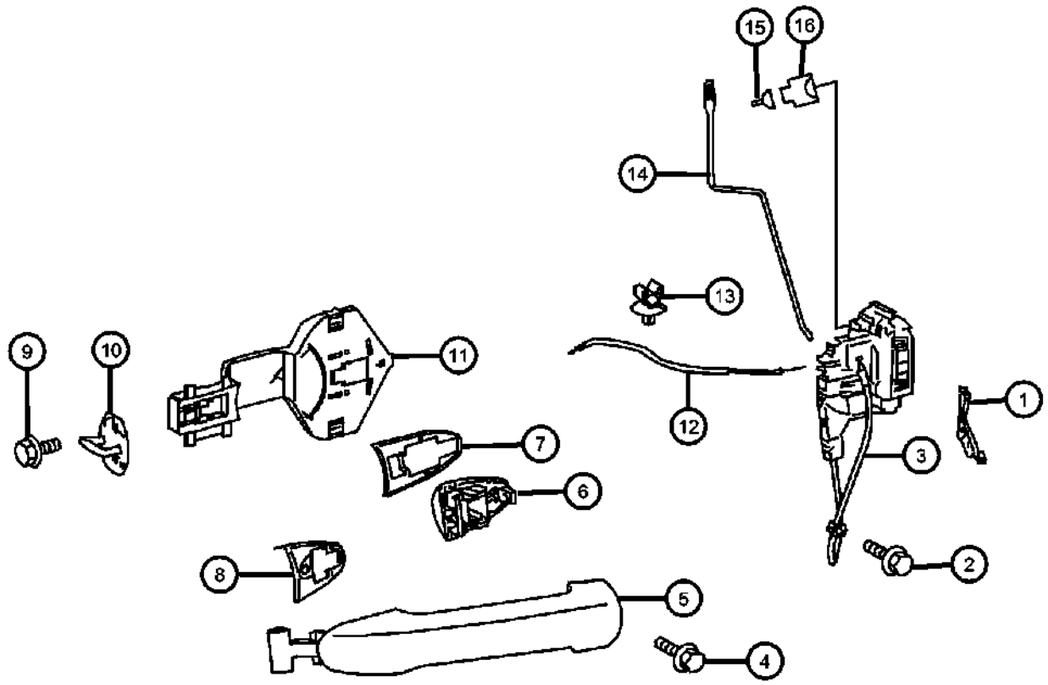

SPRINTER (VB)

SERIES	LINE	BODY	ENGINE	TRANSMISSION
L = LOWLINE	3 = HD DODGE 2WD 6 = Lt. Duty DODGE 4WD 2 = Med. Duty DODGE 2WD 7 = Med. Duty DODGE 4WD	17 = VAN WHEEL BASE 7 55 = WAGON WHEEL BASE 5 15 = VAN WHEEL BASE 5 53 = 119 WB 13 = 119 WB 05 = CAB CHASSIS WHEEL BASE 5 03 = CAB CHASSIS WHEEL BASE 3	EG2 = 3.5L V6 Gas Engine EXM = 3.0L V6 Turbo Diesel Engine	DGZ = 5-Speed Auto W5A380 Transmission

Door Panelling
Figure 30-140

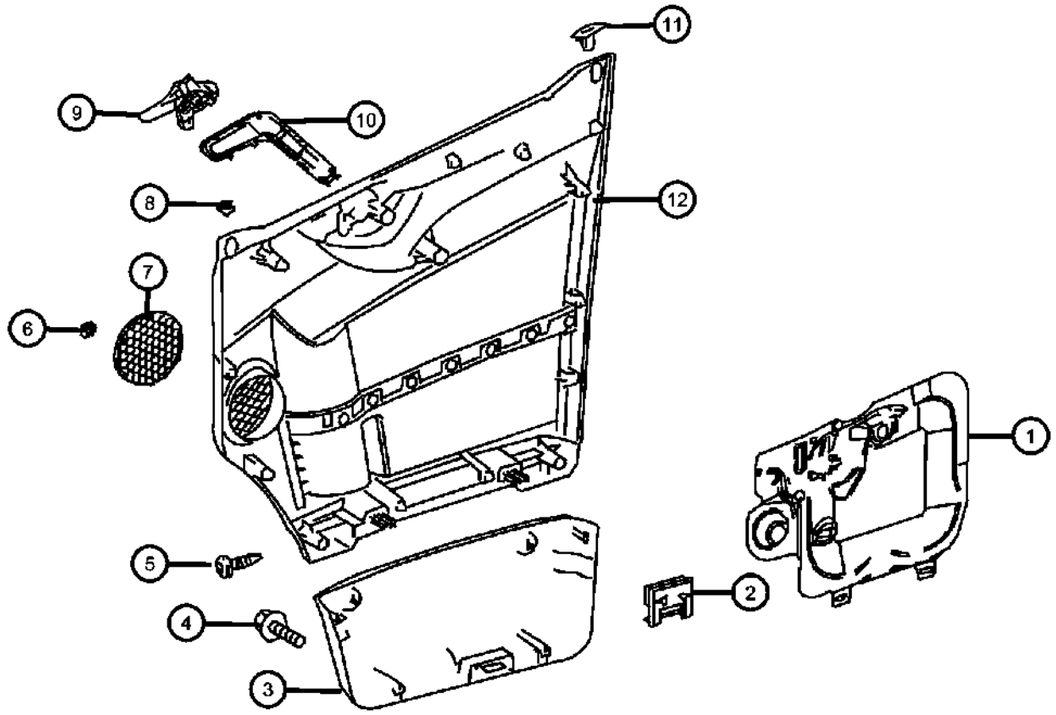

ITEM	PART NUMBER	QTY	LINE	SERIES	BODY	ENGINE	TRANS	TRIM	DESCRIPTION
1									SHIELD, Door
	68010044AA	1	2, 3, 6, 7	L					Right
	68010045AA	1	2, 3, 6, 7	L					Left
2									BEZEL, Door Trim Panel
	05123763AA	2	2, 3, 6, 7	L	13, 15, 17, 53, 55				
		2	3, 7	L	03, 05				
3									PANEL, Front Door Trim
	1HE39XDVAA	1	2, 3, 6, 7	L					Left
	1HE40XDVAA	1	2, 3, 6, 7	L					Right
4									SCREW
	06104140AA	2	2, 3, 6, 7	L	13, 15, 17, 53, 55				Panelling Mounting M6x16, Right & Left
		2	3, 7	L	03, 05				Panelling Mounting M6x16, Right & Left
5	06104666AA	1	2, 3, 6, 7	L					SCREW
6	1HH69XDVAA	2	2, 3, 6, 7	L					COVER, Door Panelling, Right & Left
7	1HE42XDVAA	2	2, 3, 6, 7	L					GRILLE, Speaker
8	68006484AA	11	2, 3, 6, 7	L					RETAINER
9									HANDLE, Inside Release
	1HE52XDVAA	1	2, 3, 6, 7	L					Right
	1HE51XDVAA	1	2, 3, 6, 7	L					Left
10									COVER
	68010036AA	1	2, 3, 6, 7	L					Handle, Left
	68010115AA	1	2, 3, 6, 7	L					Handle, Right
11									BEZEL, Lock Knob
	1HE43XDVAA	1	2, 3, 6, 7	L					Right
	1HE44XDVAA	1	2, 3, 6, 7	L					Left
12									PANEL, Front Door
	1HE36XDVAA	1	2, 3, 6, 7	L					Left Door
	1HE37XDVAA	1	2, 3, 6, 7	L					Right Door

SPRINTER (VB)

SERIES	LINE	BODY	ENGINE	TRANSMISSION
L = LOWLINE	3 = HD DODGE 2WD 6 = Lt. Duty DODGE 4WD 2 = Med. Duty DODGE 2WD 7 = Med. Duty DODGE 4WD	17 = VAN WHEEL BASE 7 55 = WAGON WHEEL BASE 5 15 = VAN WHEEL BASE 5 53 = 119 WB 13 = 119 WB 05 = CAB CHASSIS WHEEL BASE 5 03 = CAB CHASSIS WHEEL BASE 3	EG2 = 3.5L V6 Gas Engine EXM = 3.0L V6 Turbo Diesel Engine	DGZ = 5-Speed Auto W5A380 Transmission

Rear Door, Shell
Figure 30-205

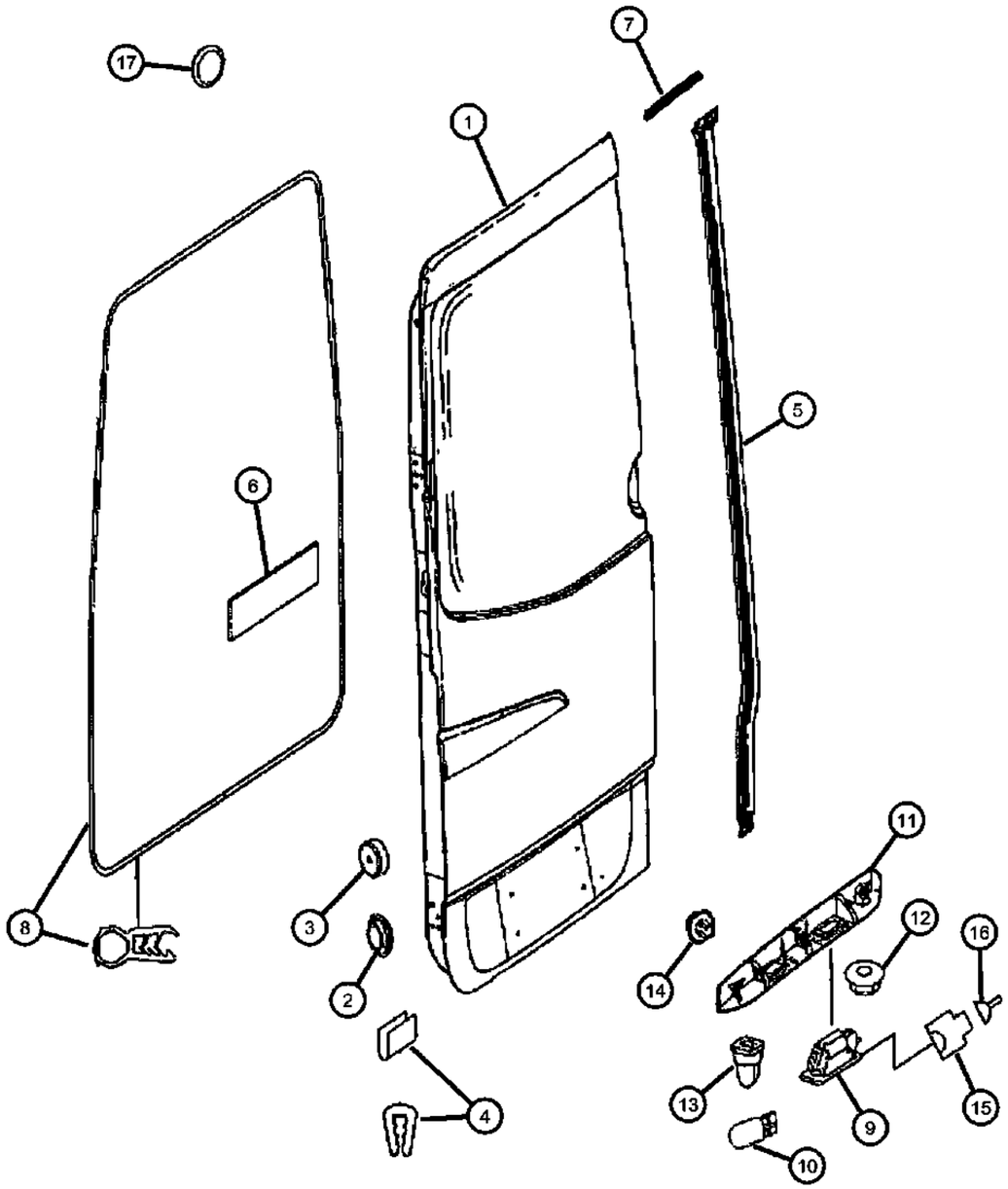

ITEM	PART NUMBER	QTY	LINE	SERIES	BODY	ENGINE	TRANS	TRIM	DESCRIPTION
1									DOOR, Rear Cargo
	68006382AA	1	2, 3, 6, 7	L	13, 15, 17, 53, 55				With Window, With High Roof, Left
	68006384AA	1	2, 3, 6, 7	L	13, 15, 17, 53, 55				Without Window, With High Roof, Left
	68006386AA	1	2, 3, 6, 7	L	13, 15, 17, 53, 55				With Window, Left
	68006388AA	1	2, 3, 6, 7	L	13, 15, 17, 53, 55				Without Window, Left
	68006523AA	1	2, 3, 6, 7	L	13, 15, 17, 53, 55				With Window, With High Roof, Right
	68006525AA	1	2, 3, 6, 7	L	13, 15, 17, 53, 55				Without Window, With High Roof, Right
	68006527AA	1	2, 3, 6, 7	L	13, 15, 17, 53, 55				With Window, Right
	68006529AA	1	2, 3, 6, 7	L	13, 15, 17, 53, 55				Without Window, Right
2									PLUG, Body
	68006360AA	1	2, 3, 6, 7	L	13, 15, 17, 53, 55				15mm
	68006445AA	1	2, 3, 6, 7	L	13, 15, 17, 53, 55				30mm
3	68006446AA	1	2, 3, 6, 7	L	13, 15, 17, 53, 55				STOPPER
4	05135206AA	AR	2, 3, 6, 7	L	13, 15, 17, 53, 55				WEATHERSTRIP
5	68006500AA	1	2, 3, 6, 7	L	13, 15, 17, 53, 55				SEAL, Door, High Roof, Left Door
6									INSULATION
	68006518AA	1	2, 3, 6, 7	L	13, 15, 17, 53, 55				With Rear Floor Insulation [HGR], Right & Left
	68006519AA	1	2, 3, 6, 7	L	13, 15, 17, 53, 55				, Right & Left
7	68014675AA	1	2, 3, 6, 7	L	13, 15, 17, 53, 55				SEAL, Door
8									WEATHERSTRIP, Cargo Door
	68014672AA	1	2, 3, 6, 7	L	13, 15, 17, 53, 55				High Roof
	68014673AA	1	2, 3, 6, 7	L	13, 15, 17, 53, 55				
9	68006502AA	2	2, 3, 6, 7	L	13, 15, 17, 53, 55				LAMP, License
10	05096968AB	2	2, 3, 6, 7	L					BULB, 12V 5W

SPRINTER (VB)

SERIES	LINE	BODY	ENGINE	TRANSMISSION
L = LOWLINE	3 = HD DODGE 2WD 6 = Lt. Duty DODGE 4WD 2 = Med. Duty DODGE 2WD 7 = Med. Duty DODGE 4WD	17 = VAN WHEEL BASE 7 55 = WAGON WHEEL BASE 5 15 = VAN WHEEL BASE 5 53 = 119 WB 13 = 119 WB 05 = CAB CHASSIS WHEEL BASE 5 03 = CAB CHASSIS WHEEL BASE 3	EG2 = 3.5L V6 Gas Engine EXM = 3.0L V6 Turbo Diesel Engine	DGZ = 5-Speed Auto W5A380 Transmission

Rear Door, Shell
Figure 30-205

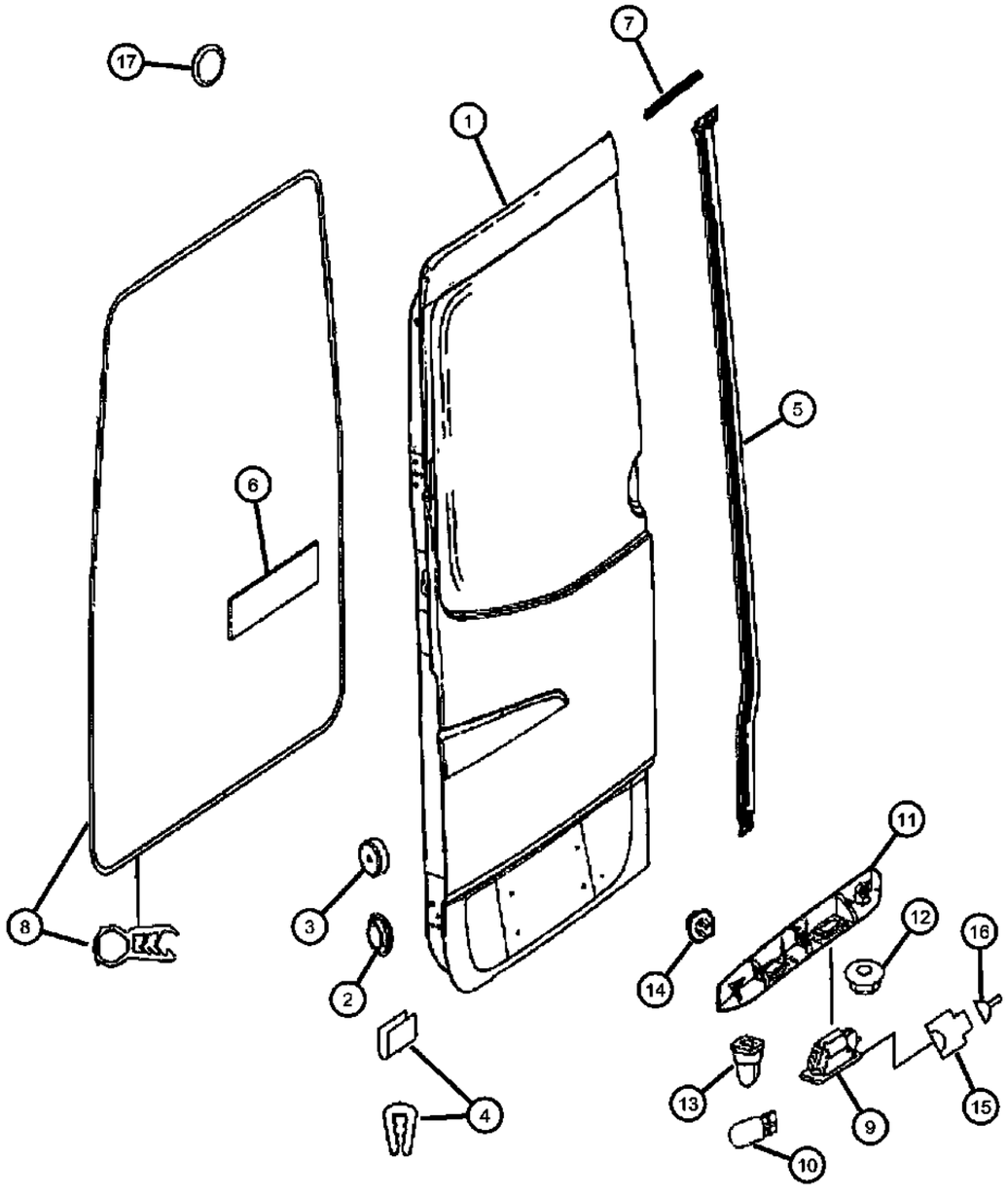

ITEM	PART NUMBER	QTY	LINE	SERIES	BODY	ENGINE	TRANS	TRIM	DESCRIPTION
11	1HE84XDVAA	1	2, 3, 6, 7	L	13, 15, 17, 53, 55				COVER, Lamp
12	68006505AA	2	2, 3, 6, 7	L	13, 15, 17, 53, 55				NUT
13	68006507AA	4	2, 3, 6, 7	L	13, 15, 17, 53, 55				RETAINER
14	68006504AA	3	2, 3, 6, 7	L					RETAINER
15	68011339AA	2	2, 3, 6, 7	L					CONNECTOR
16	05138912AA	AR	2, 3, 6, 7	L					TERMINAL
17	68006560AA	1	2, 3, 6, 7	L	13, 15, 17, 53, 55				PLUGRight

SPRINTER (VB)

SERIES	LINE	BODY	ENGINE	TRANSMISSION
L = LOWLINE	3 = HD DODGE 2WD 6 = Lt. Duty DODGE 4WD 2 = Med. Duty DODGE 2WD 7 = Med. Duty DODGE 4WD	17 = VAN WHEEL BASE 7 55 = WAGON WHEEL BASE 5 15 = VAN WHEEL BASE 5 53 = 119 WB 13 = 119 WB 05 = CAB CHASSIS WHEEL BASE 5 03 = CAB CHASSIS WHEEL BASE 3	EG2 = 3.5L V6 Gas Engine EXM = 3.0L V6 Turbo Diesel Engine	DGZ = 5-Speed Auto W5A380 Transmission

AR = use ase required - = Non illustrrated part

<< RETURN TO GROUP INDEX

Rear Door, Hindges
Figure 30-210

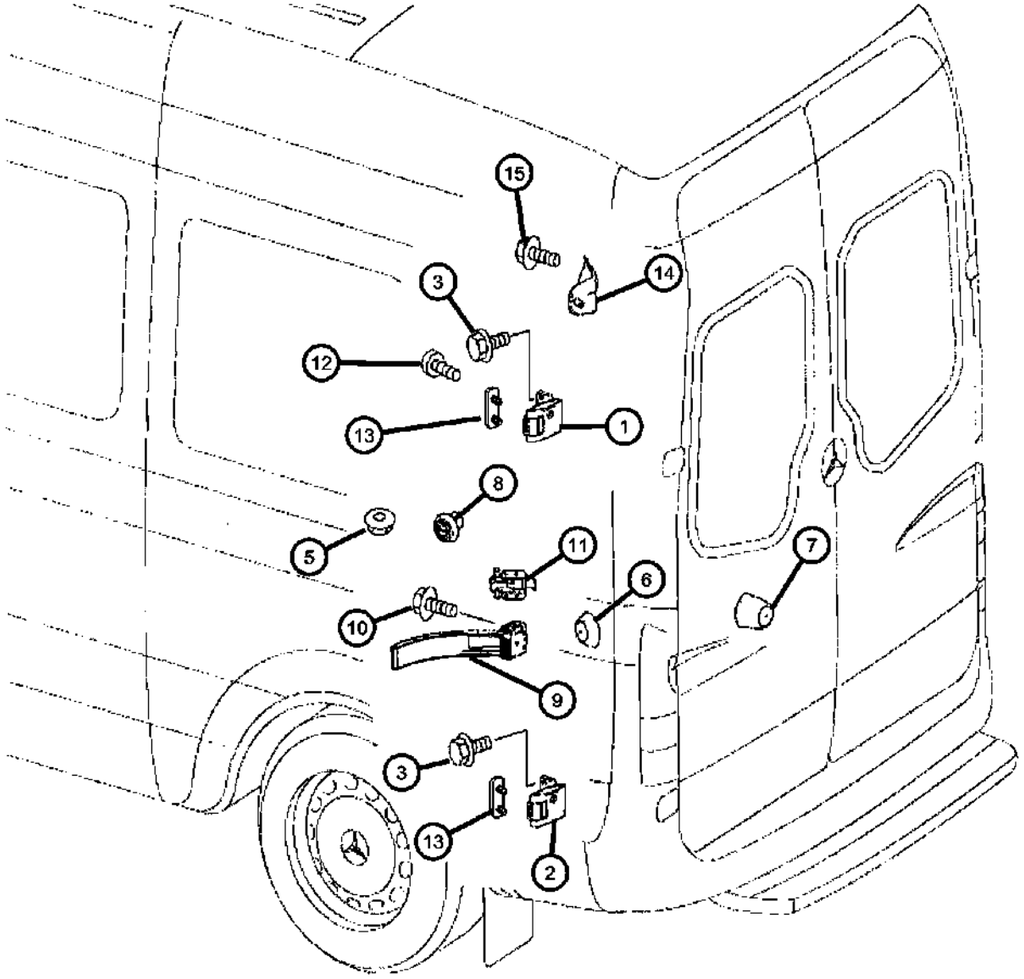

ITEM	PART NUMBER	QTY	LINE	SERIES	BODY	ENGINE	TRANS	TRIM	DESCRIPTION
1									HINGE, Rear Door
	68006452AA	1	2, 3, 6, 7	L	13, 15, 17, 53, 55				Top, Left
	68006454AA	1	2, 3, 6, 7	L	13, 15, 17, 53, 55				With [GLF], Top, Right
	68006562AA	1	2, 3, 6, 7	L	13, 15, 17, 53, 55				Top, Right
2									HINGE, Rear Door
	68006456AA	1	2, 3, 6, 7	L	13, 15, 17, 53, 55				With [GLF], Lower, Right
	68006563AA	1	2, 3, 6, 7	L	13, 15, 17, 53, 55				, Lower, Right
	68006453AA	1	3, 6, 7, 2	L	13, 15, 17, 53, 55				Lower, Left
3	06104155AA	12	2, 3, 6, 7	L	13, 15, 17, 53, 55				SCREW, [M8x25]
-4	06104157AB	12	2, 3, 6, 7	L	13, 15, 17, 53, 55				BOLT, Torx Head, M8x1.25x35.00
5	06104726AB	1	2, 3, 6, 7	L	13, 15, 17, 53, 55				NUT AND WASHER, Hex, M8x1.25
6	68006458AA	2	2, 3, 6, 7	L	15, 17, 55				BRACKET, Rubber Stop
7	68006459AA	2	2, 3, 6, 7	L	13, 15, 17, 53, 55				BRACKET, Rubber Stop At Door
8	68006461AA	2	2, 3, 6, 7	L					BUMPER, Door, Magnet
9	68006463AA	1	2, 3, 6, 7	L	13, 15, 17, 53, 55				BRACKET, Cargo Door Hinge, With [GLF], Right & Left
10									SCREW
	05104610AA	6	2, 3, 6, 7	L	13, 15, 17, 53, 55				[M8x16]
	06104141AA	2	2, 3, 6, 7	L	13, 15, 17, 53, 55				[M6x12]
11	68006464AA	1	2, 3, 6, 7	L	13, 15, 17, 53, 55				BRACKET, Cargo Door Hinge PillarRight & Left
12	06104141AA	4	2, 3, 6, 7	L	13, 15, 17, 53, 55				SCREW, [M6x12]
13	68006465AA	2	6, 7, 2, 3	L	13, 15, 17, 53, 55				STOPPERRight & Left
14	68008799AA	2	2, 3, 6, 7	L	13, 15, 17, 53, 55				BRACKET
15	05073723AB	6	2, 3, 6, 7	L	13, 15, 17, 53, 55				SCREW, [M8x20]

SPRINTER (VB)

SERIES	LINE	BODY	ENGINE	TRANSMISSION
L = LOWLINE	3 = HD DODGE 2WD 6 = Lt. Duty DODGE 4WD 2 = Med. Duty DODGE 2WD 7 = Med. Duty DODGE 4WD	17 = VAN WHEEL BASE 7 55 = WAGON WHEEL BASE 5 15 = VAN WHEEL BASE 5 53 = 119 WB 13 = 119 WB 05 = CAB CHASSIS WHEEL BASE 5 03 = CAB CHASSIS WHEEL BASE 3	EG2 = 3.5L V6 Gas Engine EXM = 3.0L V6 Turbo Diesel Engine	DGZ = 5-Speed Auto W5A380 Transmission

Sliding Door
Figure 30-305

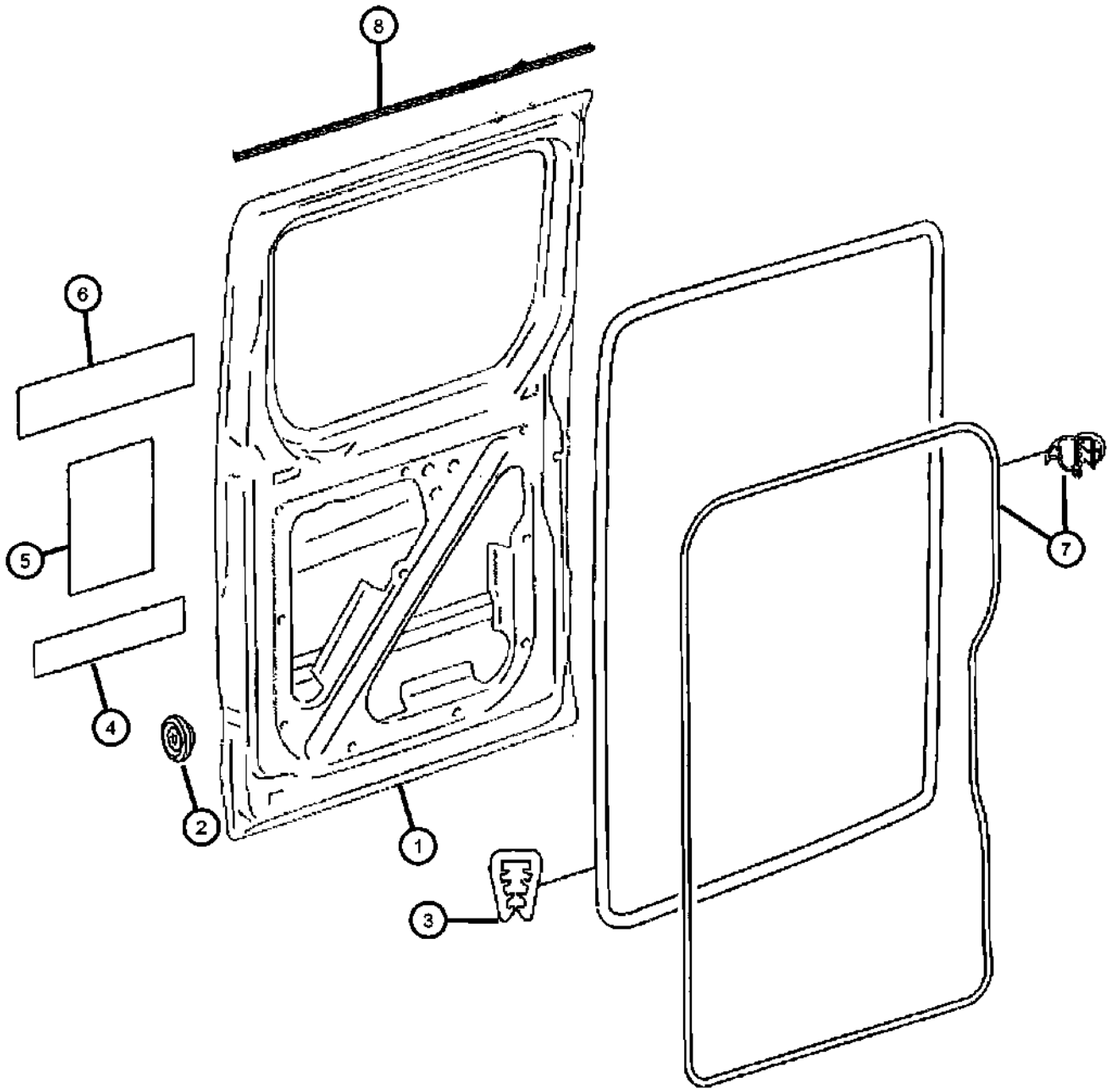

ITEM	PART NUMBER	QTY	LINE	SERIES	BODY	ENGINE	TRANS	TRIM	DESCRIPTION
1									DOOR, Side Cargo
	68010123AA	1	2, 3, 6, 7	L	13, 15, 17, 53, 55				Without Window, High Roof, Right
	68010124AA	1	2, 3, 6, 7	L	13, 15, 17, 53, 55				With Window, High Roof, Right
	68010125AA	1	2, 3, 6, 7	L	13, 15, 17, 53, 55				With Window, Right
	68010126AA	1	2, 3, 6, 7	L	13, 15, 17, 53, 55				Without Window, Right
	68017330AA	1	2, 3, 6, 7	L	13, 15, 17, 53, 55				Without Window, High Roof, Left
	68017331AA	1	2, 3, 6, 7	L	13, 15, 17, 53, 55				With Window, High Roof, Left
	68017332AA	1	2, 3, 6, 7	L	13, 15, 17, 53, 55				With Window, Left
	68017333AA	1	2, 3, 6, 7	L	13, 15, 17, 53, 55				Without Window, Left
2	68006360AA	5	2, 3, 6, 7	L	13, 15, 17, 53, 55				PLUG, Body
3	04862639AA	1	2, 3, 6, 7	L	13, 15, 17, 53, 55				WEATHERSTRIP, Cargo Door
4	68006518AA	1	2, 3, 6, 7	L	13, 15, 17, 53, 55				INSULATION
5	68010358AA	1	2, 3, 6, 7	L	13, 15, 17, 53, 55				INSULATION
6									INSULATION
	68006519AA	1	2, 3, 6, 7	L	13, 15, 17, 53, 55				
		1	3, 7	L	03, 05				
7									WEATHERSTRIP, Cargo Door
	68014676AA	1	2, 3, 6, 7	L	13, 15, 17, 53, 55				With High Roof, Left
	68014678AA	1	2, 3, 6, 7	L	13, 15, 17				With Low Roof, Left
	68014684AA	1	2, 3, 6, 7	L	13, 15, 17				With High Roof, Right
	68014687AA	1	2, 3, 6, 7	L	13, 15, 17, 53, 55				With Low Roof, Right
8	68014700AA	1	2, 3, 6, 7	L	13, 15, 17, 53, 55				WEATHERSTRIP, Cargo Door

SPRINTER (VB)

SERIES	LINE	BODY	ENGINE	TRANSMISSION
L = LOWLINE	3 = HD DODGE 2WD 6 = Lt. Duty DODGE 4WD 2 = Med. Duty DODGE 2WD 7 = Med. Duty DODGE 4WD	17 = VAN WHEEL BASE 7 55 = WAGON WHEEL BASE 5 15 = VAN WHEEL BASE 5 53 = 119 WB 13 = 119 WB 05 = CAB CHASSIS WHEEL BASE 5 03 = CAB CHASSIS WHEEL BASE 3	EG2 = 3.5L V6 Gas Engine EXM = 3.0L V6 Turbo Diesel Engine	DGZ = 5-Speed Auto W5A380 Transmission

Door Drive Mechanism
Figure 30-310

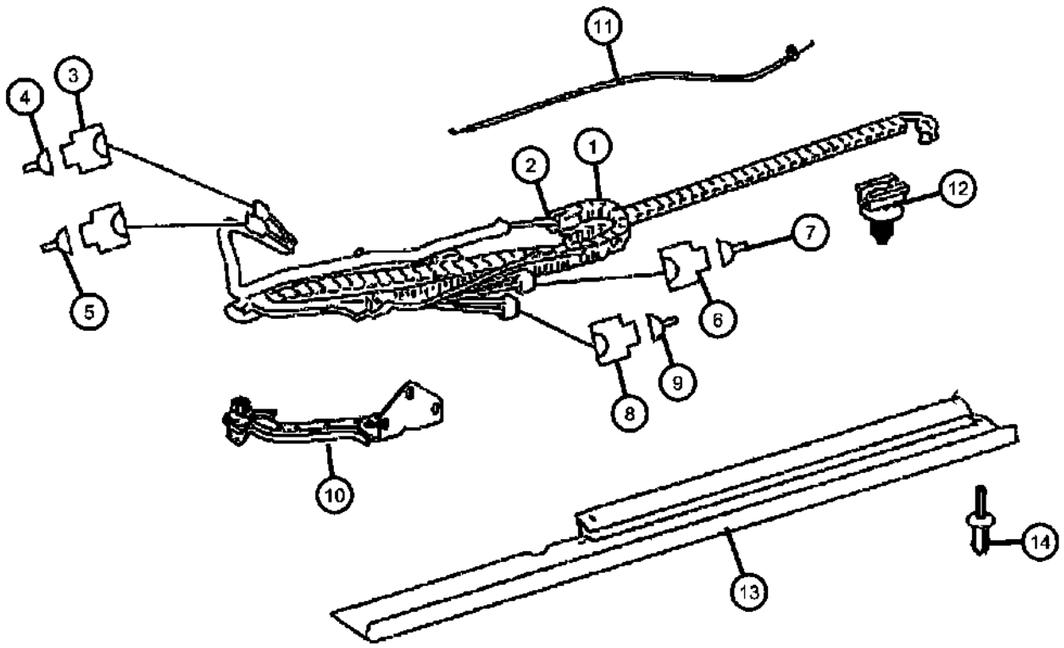

ITEM	PART NUMBER	QTY	LINE	SERIES	BODY	ENGINE	TRANS	TRIM	DESCRIPTION
1	68010307AA	1	2, 3, 6, 7	L	13, 15, 17, 53, 55				WIRE TRACK, Sliding Door Left
2									WIRE TRACK, Sliding Door Right
	68010306AA	1	2, 3, 6, 7	L	13, 15, 17, 53, 55				With [RC5]
	68010312AA	1	2, 3, 6, 7	L	13, 15, 17, 53, 55				With [GKA]
3	68011362AA	1	2, 3, 6, 7	L					CONNECTOR
4	68016714AA	1	2, 3, 6, 7	L					TERMINAL
5									TERMINAL, Male
	05133990AA	99	3, 7	L	03, 05				
		99	2, 3, 6, 7	L	13, 15, 17, 53, 55				
6									CONNECTOR
	68011254AA	1	2, 3, 6, 7	L	13, 15, 17				
		1	2, 3, 6, 7	L	03, 05, 53, 55				
7	05133945AA	AR	2, 3, 6, 7	L					TERMINAL
8									INSULATOR, 6 Way
	05120260AA	1	2, 3, 6, 7	L	13, 15, 17, 53, 55				
		1	3, 7	L	03, 05				
9	05103873AA	3	2, 3, 6, 7	L	13, 15, 17, 53, 55				TERMINAL
10	68017385AA	1	2, 3, 6, 7	L	13, 15, 17, 53, 55				SLIDER, Body HardwareLeft
11	68017384AA	1	2, 3, 6, 7	L	13, 15, 17, 53, 55				CABLELeft
12									CLIP, Retainer
	68013413AA	1	2, 3, 6, 7	L	13, 15, 17, 53, 55				
		1	3, 7	L	03, 05				
13	68017387AA	1	2, 3, 6, 7	L	13, 15, 17, 53, 55				FOIL, Insulator, Without [CWC],[XJW],[XJ1] or [GEX]
14	06104903AA	1	2, 3, 6, 7	L	13, 15, 17, 53, 55				RIVET

SPRINTER (VB)

SERIES	LINE	BODY	ENGINE	TRANSMISSION
L = LOWLINE	3 = HD DODGE 2WD 6 = Lt. Duty DODGE 4WD 2 = Med. Duty DODGE 2WD 7 = Med. Duty DODGE 4WD	17 = VAN WHEEL BASE 7 55 = WAGON WHEEL BASE 5 15 = VAN WHEEL BASE 5 53 = 119 WB 13 = 119 WB 05 = CAB CHASSIS WHEEL BASE 5 03 = CAB CHASSIS WHEEL BASE 3	EG2 = 3.5L V6 Gas Engine EXM = 3.0L V6 Turbo Diesel Engine	DGZ = 5-Speed Auto W5A380 Transmission

Sliding Door Rail & Suspension
Figure 30-320

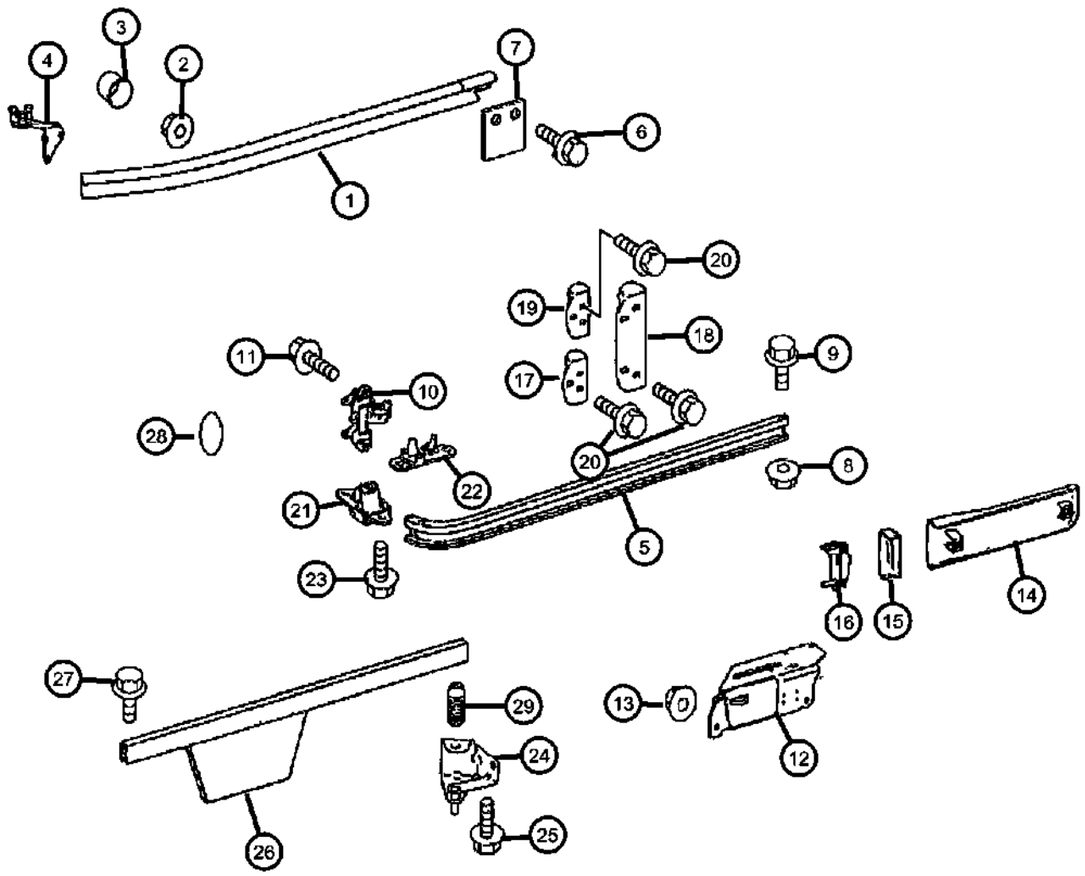

ITEM	PART NUMBER	QTY	LINE	SERIES	BODY	ENGINE	TRANS	TRIM	DESCRIPTION
1									RAIL, Slider Door
	68010186AA	1	2, 3, 6, 7	L	13, 15, 17, 53, 55				Upper With [GXQ] Two Stage Sliding Door, Right
	68010187AA	1	2, 3, 6, 7	L	13, 15, 17, 53, 55				Upper With [GXQ] Two Stage Sliding Door, Left
	68010188AA	1	2, 3, 6, 7	L	13, 15, 17, 53, 55				Upper Without [GXQ] Two Stage Sliding Door, Right
	68010189AA	1	2, 3, 6, 7	L	13, 15, 17, 53, 55				Upper Without [GXQ] Two Stage Sliding Door, Left
2	68010192AA	8	2, 3, 6, 7	L	13, 15, 17, 53, 55				NUT
3	05126256AA	1	2, 3, 6, 7	L	15, 55				CAP
4									SLIDER, Body Hardware
	68010193AA	1	2, 3, 6, 7	L	13, 15, 17, 53, 55				Right
	68017366AA	1	2, 3, 6, 7	L	13, 15, 17, 53, 55				Left
5									RAIL, Slider Door
	68018802AA	1	2, 3, 6, 7	L	13, 15, 17, 53, 55				Right
	68018803AA	1	2, 3, 6, 7	L	13, 15, 17, 53, 55				Left
6	68010198AA	1	2, 3, 6, 7	L	13, 15, 17, 53, 55				SCREW
7	68018801AA	1	2, 3, 6, 7	L	13, 15, 17, 53, 55				PAD
8	68010192AA	8	2, 3, 6, 7	L	13, 15, 17, 53, 55				NUT
9	68010198AA	1	2, 3, 6, 7	L	13, 15, 17, 53, 55				SCREW
10									SLIDER, Body Hardware
	68010199AA	1	2, 3, 6, 7	L	13, 15, 17, 53, 55				With [GKA] Right Sliding Door, Right
	68017367AA	1	2, 3, 6, 7	L	13, 15, 17, 53, 55				With [GKE] Left Sliding Door, Left
11	06104153AA	3	2, 3, 6, 7	L	13, 15, 17, 53, 55				SCREW
12									BRACKET
	68010210AA	1	2, 3, 6, 7	L	13, 15, 17, 53, 55				Right
	68010211AA	1	2, 3, 6, 7	L	13, 15, 17, 53, 55				Left

SPRINTER (VB)

SERIES	LINE	BODY	ENGINE	TRANSMISSION
L = LOWLINE	3 = HD DODGE 2WD 6 = Lt. Duty DODGE 4WD 2 = Med. Duty DODGE 2WD 7 = Med. Duty DODGE 4WD	17 = VAN WHEEL BASE 7 55 = WAGON WHEEL BASE 5 15 = VAN WHEEL BASE 5 53 = 119 WB 13 = 119 WB 05 = CAB CHASSIS WHEEL BASE 5 03 = CAB CHASSIS WHEEL BASE 3	EG2 = 3.5L V6 Gas Engine EXM = 3.0L V6 Turbo Diesel Engine	DGZ = 5-Speed Auto W5A380 Transmission

Sliding Door Rail & Suspension
Figure 30-320

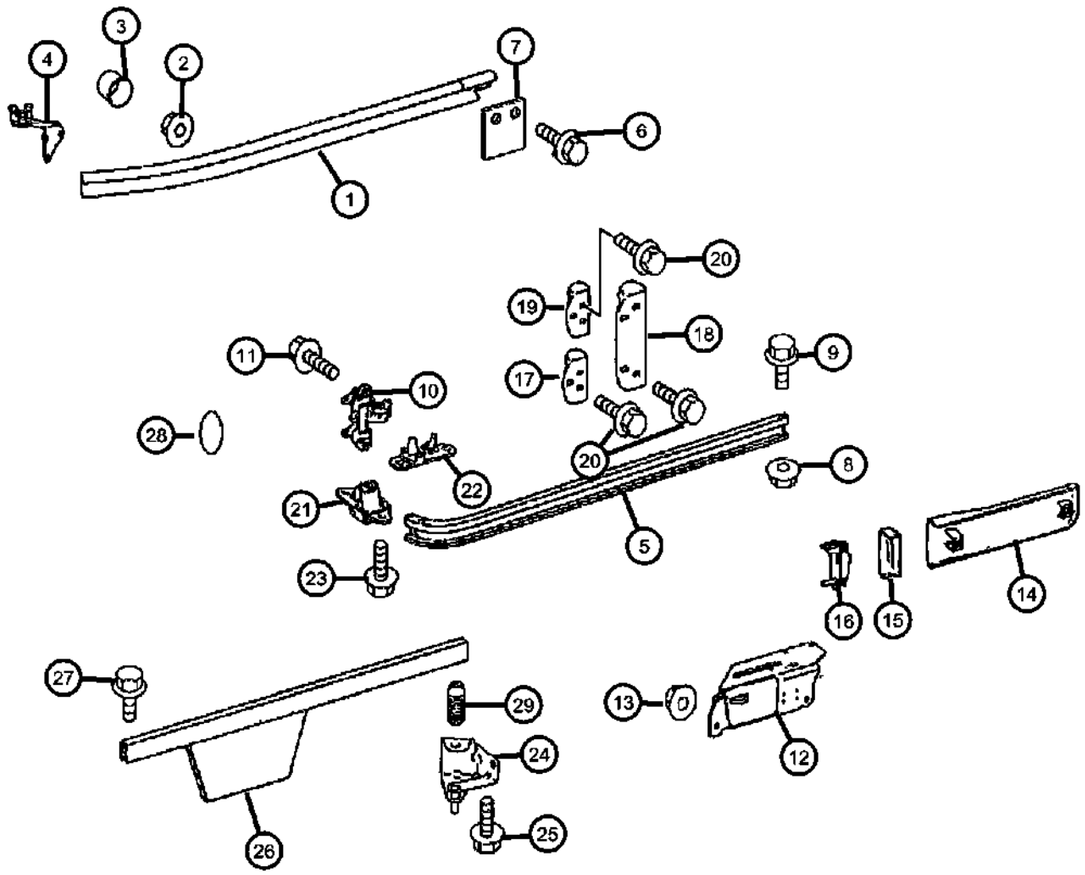

ITEM	PART NUMBER	QTY	LINE	SERIES	BODY	ENGINE	TRANS	TRIM	DESCRIPTION
13									NUT
	68004878AA	2	2, 3, 6, 7	L	13, 15, 17, 53, 55				
		2	3, 7	L	03, 05				
14									COVER
	68018806AA	2	2, 3, 6, 7	L	13, 53				Right
	68018807AA	2	3, 7	L	13, 53				Left
		2	2, 6	L	13, 53				Left
15									COVER
	68018808AA	1	2, 6	L	13, 15, 17, 53, 55				Right
	68018809AA	1	2, 6	L	13, 15, 17, 53, 55				Left
16									CAP
	68018810AA	1	2, 3, 6, 7	L	13, 15, 17, 53, 55				Right
	68018811AA	1	2, 6	L	13, 15, 17, 53, 55				Left
17	68010203AA	1	2, 3, 6, 7	L	13, 15, 17, 53, 55				BUMPER, RubberRight & Left
18	68010204AA	1	2, 3, 6, 7	L	13, 15, 17, 53, 55				BUMPER, RubberRight & Left
19	68010202AA	1	2, 3, 6, 7	L	13, 15, 17, 53, 55				BUMPER, RubberRight & Left
20	06104153AA	3	2, 3, 6, 7	L	13, 15, 17, 53, 55				SCREW
21	68010205AA	2	2, 3, 6, 7	L	13, 15, 17, 53, 55				SLIDER, Body Hardware
22	68010206AA	2	2, 3, 6, 7	L	13, 15, 17, 53, 55				WEDGE, Sliding Door
23	06104142AA	2	2, 3, 6, 7	L	13, 15, 17, 53, 55				SCREW, Pan Head, M6x1.00x16.00
24	68010207AA	1	2, 3, 6, 7	L	13, 15, 17, 53, 55				BRACKETRight
25	06104152AA	2	2, 3, 6, 7	L	13, 15, 17, 53, 55				SCREW
26									REINFORCEMENT
	68010209AA	1	2, 3, 6, 7	L	13, 15, 17, 53, 55				Right
	68017369AA	1	2, 3, 6, 7	L	13, 15, 17, 53, 55				Left

SPRINTER (VB)

SERIES	LINE	BODY	ENGINE	TRANSMISSION
L = LOWLINE	3 = HD DODGE 2WD 6 = Lt. Duty DODGE 4WD 2 = Med. Duty DODGE 2WD 7 = Med. Duty DODGE 4WD	17 = VAN WHEEL BASE 7 55 = WAGON WHEEL BASE 5 15 = VAN WHEEL BASE 5 53 = 119 WB 13 = 119 WB 05 = CAB CHASSIS WHEEL BASE 5 03 = CAB CHASSIS WHEEL BASE 3	EG2 = 3.5L V6 Gas Engine EXM = 3.0L V6 Turbo Diesel Engine	DGZ = 5-Speed Auto W5A380 Transmission

Sliding Door Rail & Suspension
Figure 30-320

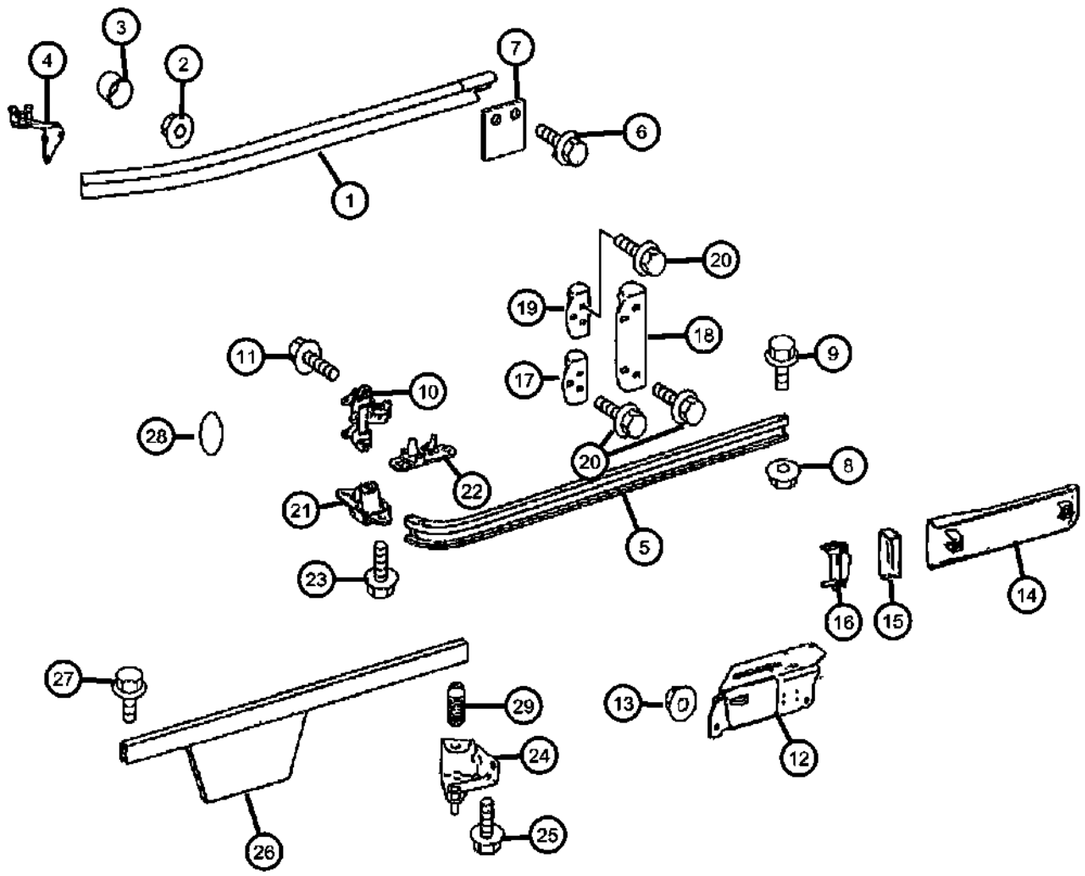

ITEM	PART NUMBER	QTY	LINE	SERIES	BODY	ENGINE	TRANS	TRIM	DESCRIPTION
27									SCREW
	06104129AA	3	3, 7	L	03, 05				
		3	2, 3, 6, 7	L	13, 15, 17, 53, 55				
28									FOIL, Insulator
	05099253AA	1	3, 7	L	03, 05				
		1	2, 3, 6, 7	L	13, 15, 17, 53, 55				
29	68010208AA	2	2, 3, 6, 7	L	13, 15, 17, 53, 55				BUMPER, Rubber

SPRINTER (VB)

SERIES	LINE	BODY	ENGINE	TRANSMISSION
L = LOWLINE	3 = HD DODGE 2WD 6 = Lt. Duty DODGE 4WD 2 = Med. Duty DODGE 2WD 7 = Med. Duty DODGE 4WD	17 = VAN WHEEL BASE 7 55 = WAGON WHEEL BASE 5 15 = VAN WHEEL BASE 5 53 = 119 WB 13 = 119 WB 05 = CAB CHASSIS WHEEL BASE 5 03 = CAB CHASSIS WHEEL BASE 3	EG2 = 3.5L V6 Gas Engine EXM = 3.0L V6 Turbo Diesel Engine	DGZ = 5-Speed Auto W5A380 Transmission

Sliding Door , Inside Handle & Locking System
Figure 30-330

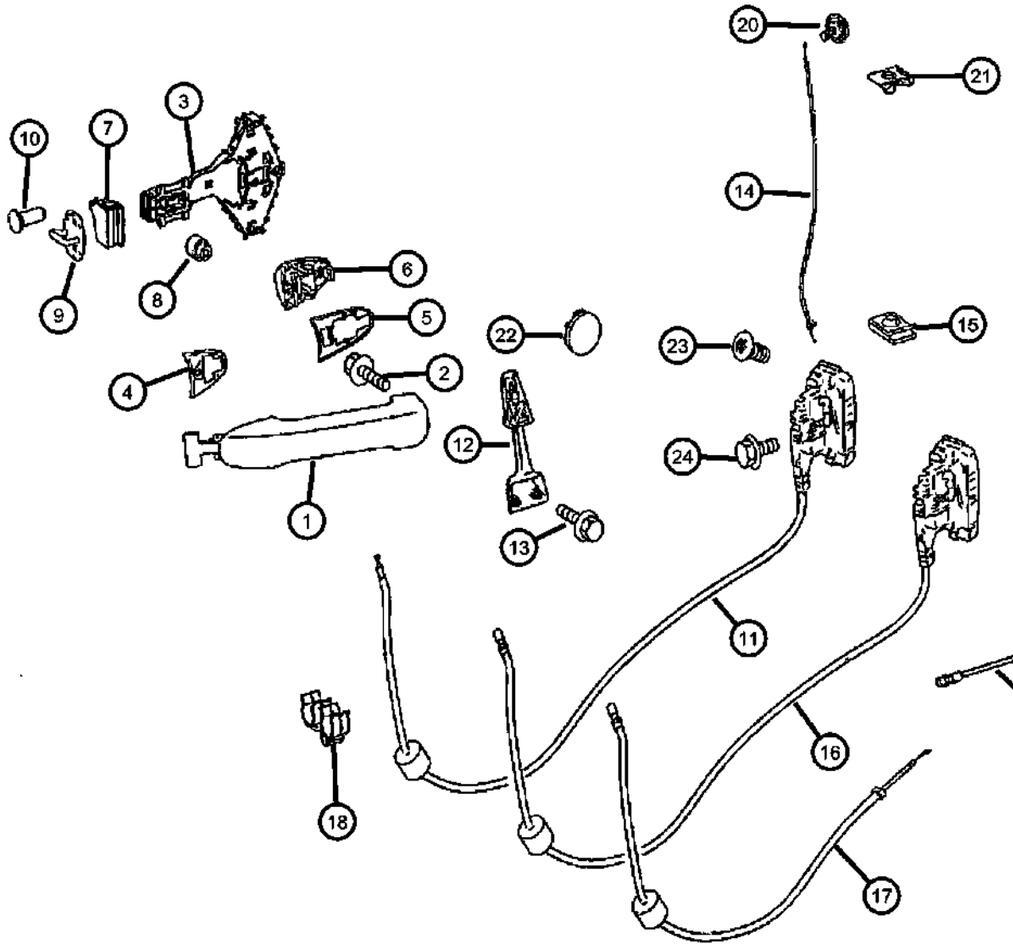

ITEM	PART NUMBER	QTY	LINE	SERIES	BODY	ENGINE	TRANS	TRIM	DESCRIPTION
1	68006564AA	1	2, 3, 6, 7	L	13, 15, 17, 53, 55				HANDLE, Front And Sliding DoorRight & Left
2	06104136AA	1	2, 3, 6, 7	L	13, 15, 17, 53, 55				SCREW
3									BRACKET, Door Handle
	68010226AA	1	2, 3, 6, 7	L	13, 15, 17, 53, 55				Right
	68010227AA	1	2, 3	L	13, 15, 17, 53, 55				Left
4	68010008AA	1	2, 3, 6, 7	L					PADFront, Right & Left
5	68010009AA	1	2, 3, 6, 7	L					PADRear, Right & Left
6	68010228AA	1	2, 3, 6, 7	L	13, 15, 17, 53, 55				CAP, Door Lock Cylinder
7									COVER
	68010230AA	1	2, 3, 6, 7	L	13, 15, 17, 53, 55				Right
	68010231AA	1	2, 3	L	13, 15, 17, 53, 55				Left
8	68010229AA	1	2, 3, 6, 7	L	13, 15, 17, 53, 55				BUSHING
9	68010232AA	1	2, 3, 6, 7	L	13, 15, 17, 53, 55				STRIKER, Door Latch
10	05103715AA	2	2, 3, 6, 7	L	13, 15, 17, 53, 55				SCREW
11									LOCK, Side Cargo Door
	68010224AA	1	2, 3, 6, 7	L	13, 15, 17, 53, 55				With High Roof / With [GKA], Right
	68010225AA	1	2, 3, 6, 7	L	13, 15, 17, 53, 55				With High Roof / With [GKE], Left
12									HANDLE, Sliding Door Assist
	68010233AA	1	2, 3, 6, 7	L	13, 15, 17, 53, 55				Left
	68017374AA	1	2, 3, 6, 7	L	13, 15, 17, 53, 55				Right
13	06104123AA	3	2, 3, 6, 7	L	13, 15, 17, 53, 55				SCREW
14									CABLE
	68010237AA	1	2, 3, 6, 7	L	13, 15, 17, 53, 55				Right
	68017375AA	1	2, 3, 6, 7	L	13, 15, 17, 53, 55				Left

SPRINTER (VB)

SERIES	LINE	BODY	ENGINE	TRANSMISSION
L = LOWLINE	3 = HD DODGE 2WD 6 = Lt. Duty DODGE 4WD 2 = Med. Duty DODGE 2WD 7 = Med. Duty DODGE 4WD	17 = VAN WHEEL BASE 7 55 = WAGON WHEEL BASE 5 15 = VAN WHEEL BASE 5 53 = 119 WB 13 = 119 WB 05 = CAB CHASSIS WHEEL BASE 5 03 = CAB CHASSIS WHEEL BASE 3	EG2 = 3.5L V6 Gas Engine EXM = 3.0L V6 Turbo Diesel Engine	DGZ = 5-Speed Auto W5A380 Transmission

Sliding Door , Inside Handle & Locking System
Figure 30-330

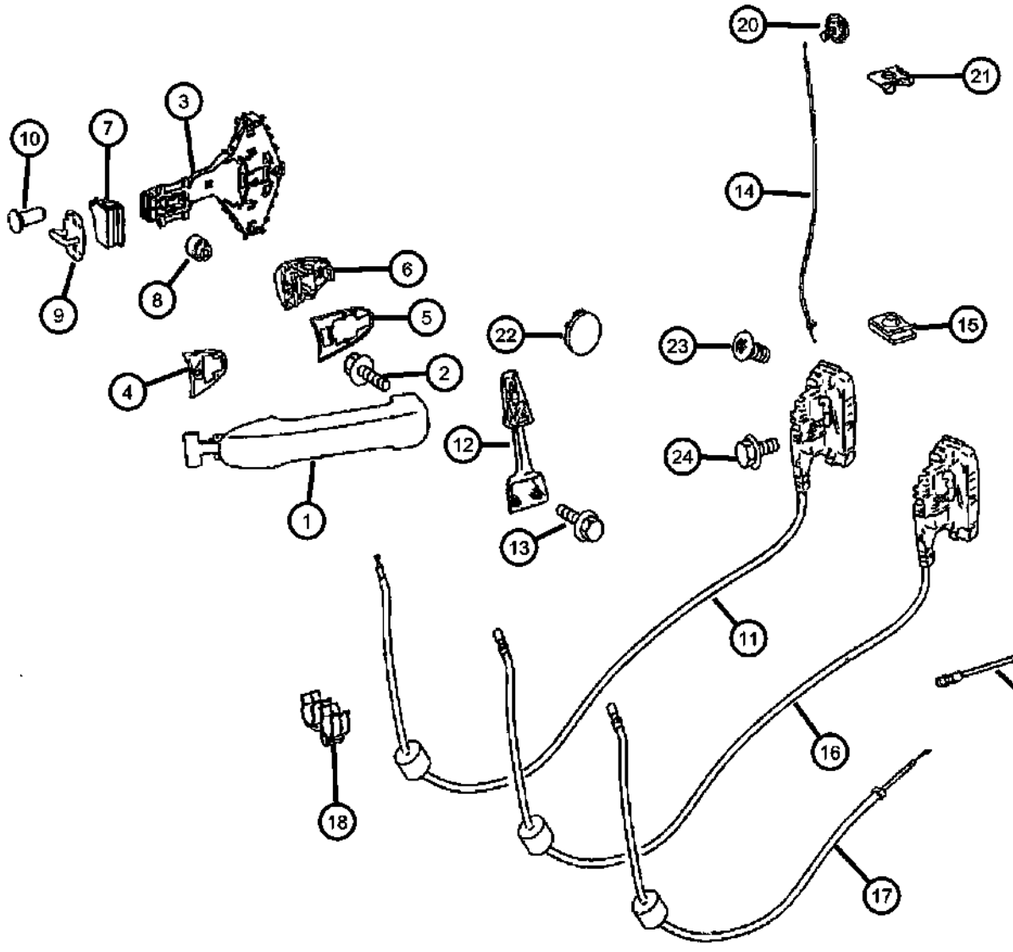

ITEM	PART NUMBER	QTY	LINE	SERIES	BODY	ENGINE	TRANS	TRIM	DESCRIPTION
15	68010238AA	2	2, 3, 6, 7	L	13, 15, 17, 53, 55				CLIP
16	68010239AA	1	2, 3, 6, 7	L	13, 15, 17, 53, 55				CABLE, Catch, Cable
17	68010240AA	1	2, 3, 6, 7	L	13, 15, 17, 53, 55				CABLE, Control Cable
18	68020509AA	1	2, 3, 6, 7	L	13, 15, 17, 53, 55				RETAINER
19	68010242AA	1	2, 3, 6, 7	L	13, 15, 17, 53, 55				KNOB AND LINK, Door Latch
20	68010246AA	1	2, 3, 6, 7	L	13, 15, 17, 53, 55				BRACKET
21	06104744AA	1	2, 3, 6, 7	L	13, 15, 17, 53, 55				NUT, Locking
22									COVER
	1HQ50P01AA	1	2, 3, 6, 7	L					White
	1HQ50XD-VAA	1	2, 3, 6, 7	L					Gray
23									SCREW, M6x16
	05101576AA	3	2, 3, 6, 7	L	13, 15, 17, 53, 55				
		3	3, 7	L	03, 05				
24									SCREW
	06104141AA	2	2, 3, 6, 7	L	13, 15, 17, 53, 55				M6x12
	68000329AA	1	2, 3, 6, 7	L	13, 15, 17, 53, 55				M5x25

SPRINTER (VB)

SERIES	LINE	BODY	ENGINE	TRANSMISSION
L = LOWLINE	3 = HD DODGE 2WD 6 = Lt. Duty DODGE 4WD 2 = Med. Duty DODGE 2WD 7 = Med. Duty DODGE 4WD	17 = VAN WHEEL BASE 7 55 = WAGON WHEEL BASE 5 15 = VAN WHEEL BASE 5 53 = 119 WB 13 = 119 WB 05 = CAB CHASSIS WHEEL BASE 5 03 = CAB CHASSIS WHEEL BASE 3	EG2 = 3.5L V6 Gas Engine EXM = 3.0L V6 Turbo Diesel Engine	DGZ = 5-Speed Auto W5A380 Transmission

Dual Door, Hardware Components
Figure 30-420

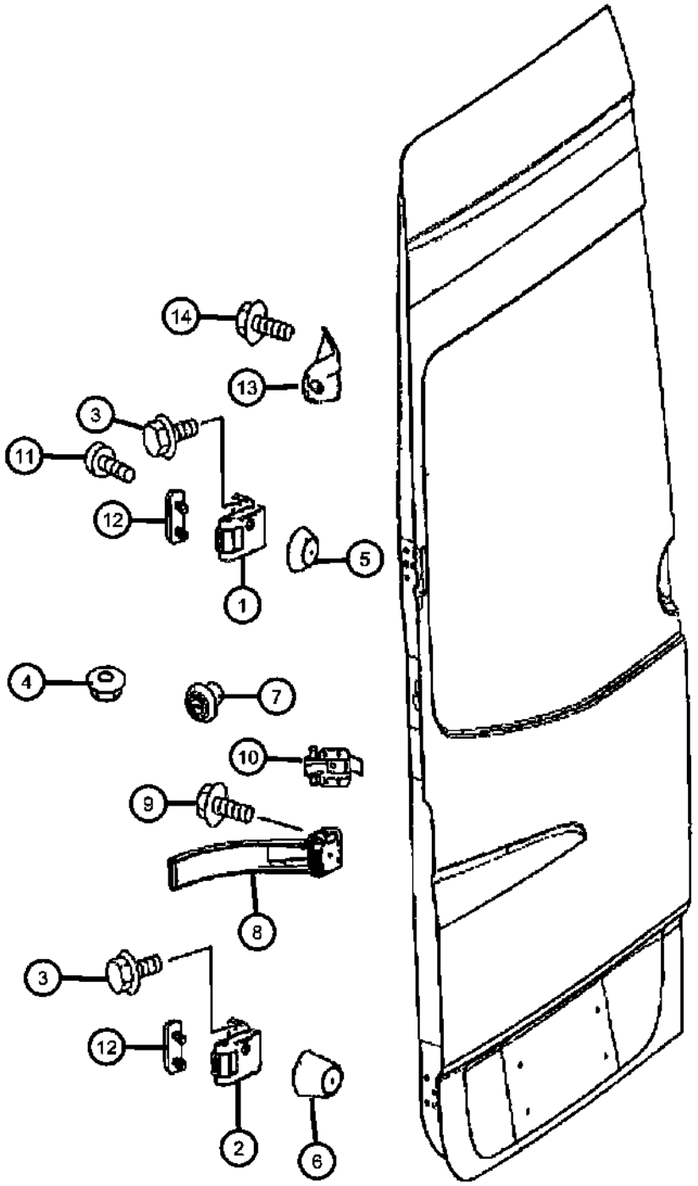

ITEM	PART NUMBER	QTY	LINE	SERIES	BODY	ENGINE	TRANS	TRIM	DESCRIPTION
1									HINGE, Rear Door
	68006454AA	1	2, 3, 6, 7	L	13, 15, 17, 53, 55				With Sales Code [GLF], Top, Right
	68006562AA	1	2, 3, 6, 7	L	13, 15, 17, 53, 55				Without Sales Code [GLF], Top, Right
	68006452AA	1	2, 3, 6, 7	L	13, 15, 17, 53, 55				Without Sales Code [GLF], Top, Left
2									HINGE, Rear Door
	68006453AA	1	2, 3, 6, 7	L	13, 15, 17, 53, 55				Without Sales Code [GLF], Lower, Left
	68006456AA	1	7, 2, 3, 6	L	13, 15, 17, 53, 55				With Sales Code [GLF], Lower, Right
	68006563AA	1	2, 3, 6, 7	L	13, 15, 17, 53, 55				Without Sales Code [GLF], Lower, Right
3	06104155AA	12	2, 3, 6, 7	L	15, 17, 53, 55, 13				SCREWUpper
4	06104726AB	1	2, 3, 6, 7	L	13, 15, 17, 53, 55				NUT AND WASHER, Hex, M8x1.25
5	68006458AA	2	2, 3, 6, 7	L	15, 17, 55				BRACKET, Without Rear Wiper
6									BRACKET
	68006459AA	2	2, 3, 6, 7	L	17, 53, 55, 13, 15				Without [GKG]
	68006460AA	1	2, 3, 6, 7	L	13, 53				With [GKG]
7	68006461AA	2	2, 3, 6, 7	L					BUMPER, Door, Magnet
8	68006463AA	1	2, 3, 6, 7	L	13, 15, 17, 53, 55				BRACKET, Cargo Door HingeRight & Left
9	05104610AA	6	2, 3, 6, 7	L	13, 15, 17, 53, 55				SCREW, With [GLF]
10	68006464AA	1	2, 3, 6, 7	L	13, 15, 17, 53, 55				BRACKET, Cargo Door Hinge PillarRight & Left
11	06104141AA	4	2, 3, 6, 7	L	13, 15, 17, 53, 55				SCREW
12	68006465AA	2	2, 3, 6, 7	L	13, 15, 17, 53, 55				STOPPER
13	68008799AA	2	2, 3, 6, 7	L	13, 15, 17, 53, 55				BRACKET
14									SCREW
	05073723AB	6	3, 7	L	03, 05				With [GLF]
		6	6, 7, 2, 3	L	13, 15, 17, 53, 55				With [GLF]

SPRINTER (VB)

SERIES	LINE	BODY	ENGINE	TRANSMISSION
L = LOWLINE	3 = HD DODGE 2WD 6 = Lt. Duty DODGE 4WD 2 = Med. Duty DODGE 2WD 7 = Med. Duty DODGE 4WD	17 = VAN WHEEL BASE 7 55 = WAGON WHEEL BASE 5 15 = VAN WHEEL BASE 5 53 = 119 WB 13 = 119 WB 05 = CAB CHASSIS WHEEL BASE 5 03 = CAB CHASSIS WHEEL BASE 3	EG2 = 3.5L V6 Gas Engine EXM = 3.0L V6 Turbo Diesel Engine	DGZ = 5-Speed Auto W5A380 Transmission

Dual Door,Hardware Components
Figure 30-430

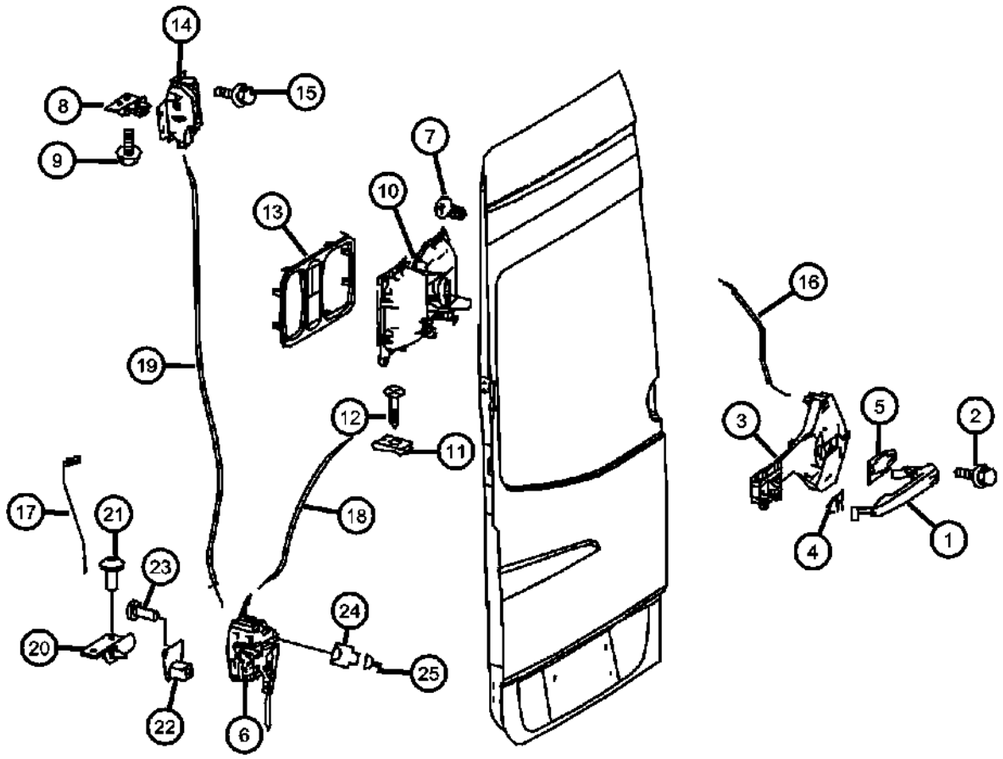

ITEM	PART NUMBER	QTY	LINE	SERIES	BODY	ENGINE	TRANS	TRIM	DESCRIPTION
1	68006564AA	1	2, 3, 6, 7	L	13, 15, 17, 53, 55				HANDLE, Front And Sliding Door
2	06104136AA	1	2, 3, 6, 7	L	13, 15, 17, 53, 55				SCREW
3	68006565AA	1	2, 3, 6, 7	L	13, 15, 17, 53, 55				BRACKET, Door Handle
4	68006566AA	1	2, 3, 6, 7	L	13, 15, 17, 53, 55				RETAINER
5	68006567AA	1	2, 3, 6, 7	L	13, 15, 17, 53, 55				RETAINER
6	68017888AA	1	2, 3, 6, 7	L	13, 15, 17, 53, 55				LATCH, Rear Door
7									SCREW, M6x16
	05101576AA	3	2, 3, 6, 7	L	13, 15, 17, 53, 55				
		3	3, 7	L	03, 05				
8	68006466AA	1	2, 3, 6, 7	L	13, 15, 17, 53, 55				STRIKER, Door
9									SCREW
	06104129AA	2	2, 3, 6, 7	L	13, 15, 17, 53, 55				
		2	3, 7	L	03, 05				
10									HANDLE, Inside Release
	1HE50XDVAA	1	2, 3, 6, 7	L	13, 15, 17, 53, 55				[A6]
		1	2, 3, 6, 7	L	13, 15, 17, 53, 55				[E7]
		1	2, 3, 6, 7	L	13, 15, 17, 53, 55				[F7]
11									NUT, Spring
	68006573AA	8	2, 3, 6, 7	L	13, 15, 17, 53, 55				
		14	3, 7	L	03, 05				
12									SCREW, Tapping
	06104566AA	8	2, 3, 6, 7	L	13, 15, 17, 53, 55				
		2	3, 7	L	03, 05				
13									COVER
	1HS08NCVAA	1	2, 3, 6, 7	L	13, 15, 17, 53, 55				[A6]

SPRINTER (VB)

SERIES	LINE	BODY	ENGINE	TRANSMISSION
L = LOWLINE	3 = HD DODGE 2WD 6 = Lt. Duty DODGE 4WD 2 = Med. Duty DODGE 2WD 7 = Med. Duty DODGE 4WD	17 = VAN WHEEL BASE 7 55 = WAGON WHEEL BASE 5 15 = VAN WHEEL BASE 5 53 = 119 WB 13 = 119 WB 05 = CAB CHASSIS WHEEL BASE 5 03 = CAB CHASSIS WHEEL BASE 3	EG2 = 3.5L V6 Gas Engine EXM = 3.0L V6 Turbo Diesel Engine	DGZ = 5-Speed Auto W5A380 Transmission

Dual Door,Hardware Components
Figure 30-430

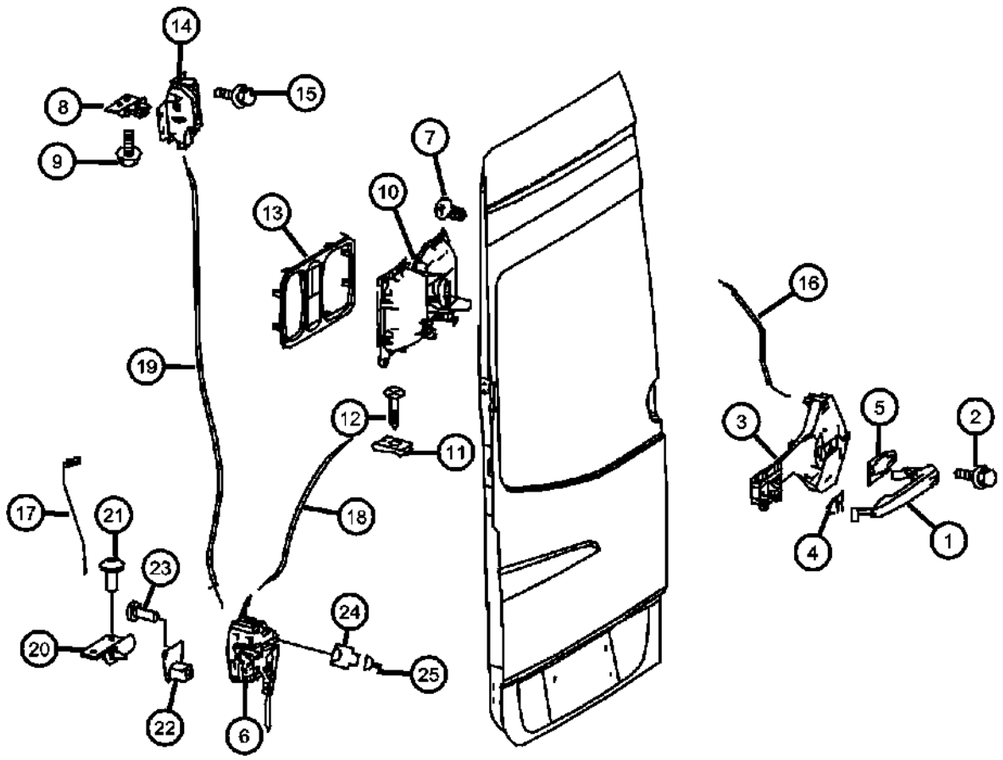

ITEM	PART NUMBER	QTY	LINE	SERIES	BODY	ENGINE	TRANS	TRIM	DESCRIPTION
		1	2, 3, 6, 7	L	13, 15, 17, 53, 55				[E7]
		1	2, 3, 6, 7	L	13, 15, 17, 53, 55				[F7]
14	68006470AA	1	2, 3, 6, 7	L	13, 15, 17, 53, 55				LOCK, Door
15	06104142AA	3	2, 3, 6, 7	L	13, 15, 17, 53, 55				SCREW, Pan Head, M6x1.00x16.00
16	68006575AA	1	2, 3, 6, 7	L	13, 15, 17, 53, 55				CABLE
17	68006576AA	1	2, 3, 6, 7	L	13, 15, 17, 53, 55				ROD, Lock
18	68006577AA	1	2, 3, 6, 7	L	13, 15, 17, 53, 55				ROD, Lock
19									CABLE
	68006578AA	1	2, 3, 6, 7	L	13, 15, 17, 53, 55				
	68006579AA	1	2, 3, 6, 7	L	13, 15, 17, 53, 55				High Roof
20	68006580AA	1	2, 3, 6, 7	L	13, 15, 17, 53, 55				GUIDE, Door Stabilizer
21									SCREW
	06104129AA	2	3, 7	L	03, 05				
		3	2, 3, 6, 7	L	13, 15, 17, 53, 55				
22	68006581AA	1	2, 3, 6, 7	L	13, 15, 17, 53, 55				GUIDE, Door Stabilizer
23	06104142AA	2	2, 3, 6, 7	L	13, 15, 17, 53, 55				SCREW, Pan Head, M6x1.00x16.00
24	68011434AA	1	2, 3, 6, 7	L					CONNECTOR
25	68013248AA	AR	2, 3, 6, 7	L					TERMINAL

SPRINTER (VB)

SERIES	LINE	BODY	ENGINE	TRANSMISSION
L = LOWLINE	3 = HD DODGE 2WD 6 = Lt. Duty DODGE 4WD 2 = Med. Duty DODGE 2WD 7 = Med. Duty DODGE 4WD	17 = VAN WHEEL BASE 7 55 = WAGON WHEEL BASE 5 15 = VAN WHEEL BASE 5 53 = 119 WB 13 = 119 WB 05 = CAB CHASSIS WHEEL BASE 5 03 = CAB CHASSIS WHEEL BASE 3	EG2 = 3.5L V6 Gas Engine EXM = 3.0L V6 Turbo Diesel Engine	DGZ = 5-Speed Auto W5A380 Transmission

Dual Door Hardware Components
Figure 30-440

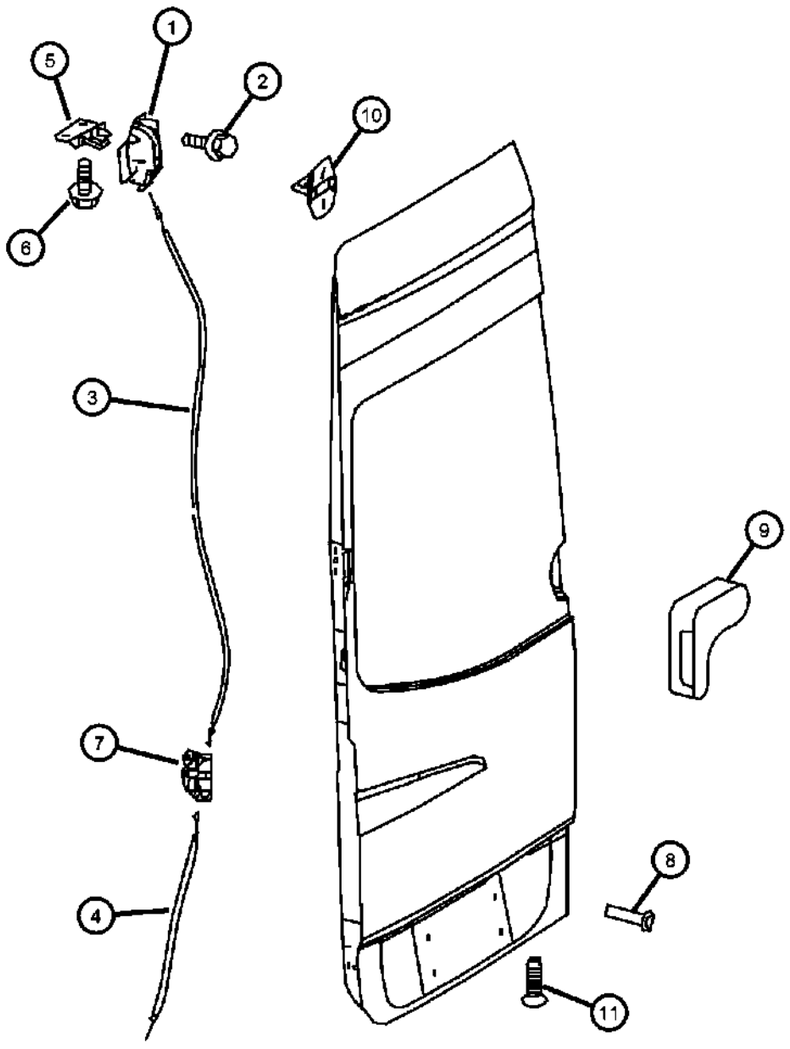

ITEM	PART NUMBER	QTY	LINE	SERIES	BODY	ENGINE	TRANS	TRIM	DESCRIPTION
1	68006470AA	2	2, 3, 6, 7	L	13, 15, 17, 53, 55				LOCK, Door
2	06104142AA	2	2, 3, 6, 7	L	13, 15, 17, 53, 55				SCREW, Pan Head, M6x1.00x16.00
3									CABLE
	68006471AA	1	2, 3, 6, 7	L	13, 15, 17, 53, 55				Top Left, High Roof
	68006472AA	1	2, 3, 6, 7	L	13, 15, 17, 53, 55				Top Left
4	68006473AA	1	2, 3, 6, 7	L	13, 15, 17, 53, 55				CABLE, Bottom Left
5	68006466AA	2	2, 3, 6, 7	L	13, 15, 17, 53, 55				STRIKER, Door
6	06104129AA	4	2, 3, 6, 7	L	13, 15, 17, 53, 55				SCREW
7	68006467AA	1	2, 3, 6, 7	L	13, 15, 17, 53, 55				LATCH
8	06104661AA	2	2, 3, 6, 7	L	13, 15, 17, 53, 55				SCREW
9	1HG35NC-VAA	1	2, 3, 6, 7	L	13, 15, 17, 53, 55				HANDLE, Rear Door Exterior
10	68006469AA	1	2, 3, 6, 7	L					LATCH
11	05103715AA	2	2, 3, 6, 7	L	13, 15, 17, 53, 55				SCREW

SPRINTER (VB)

SERIES	LINE	BODY	ENGINE	TRANSMISSION
L = LOWLINE	3 = HD DODGE 2WD 6 = Lt. Duty DODGE 4WD 2 = Med. Duty DODGE 2WD 7 = Med. Duty DODGE 4WD	17 = VAN WHEEL BASE 7 55 = WAGON WHEEL BASE 5 15 = VAN WHEEL BASE 5 53 = 119 WB 13 = 119 WB 05 = CAB CHASSIS WHEEL BASE 5 03 = CAB CHASSIS WHEEL BASE 3	EG2 = 3.5L V6 Gas Engine EXM = 3.0L V6 Turbo Diesel Engine	DGZ = 5-Speed Auto W5A380 Transmission

Mirror, Exterior, Outside Rear View Mirror
Figure 30-510

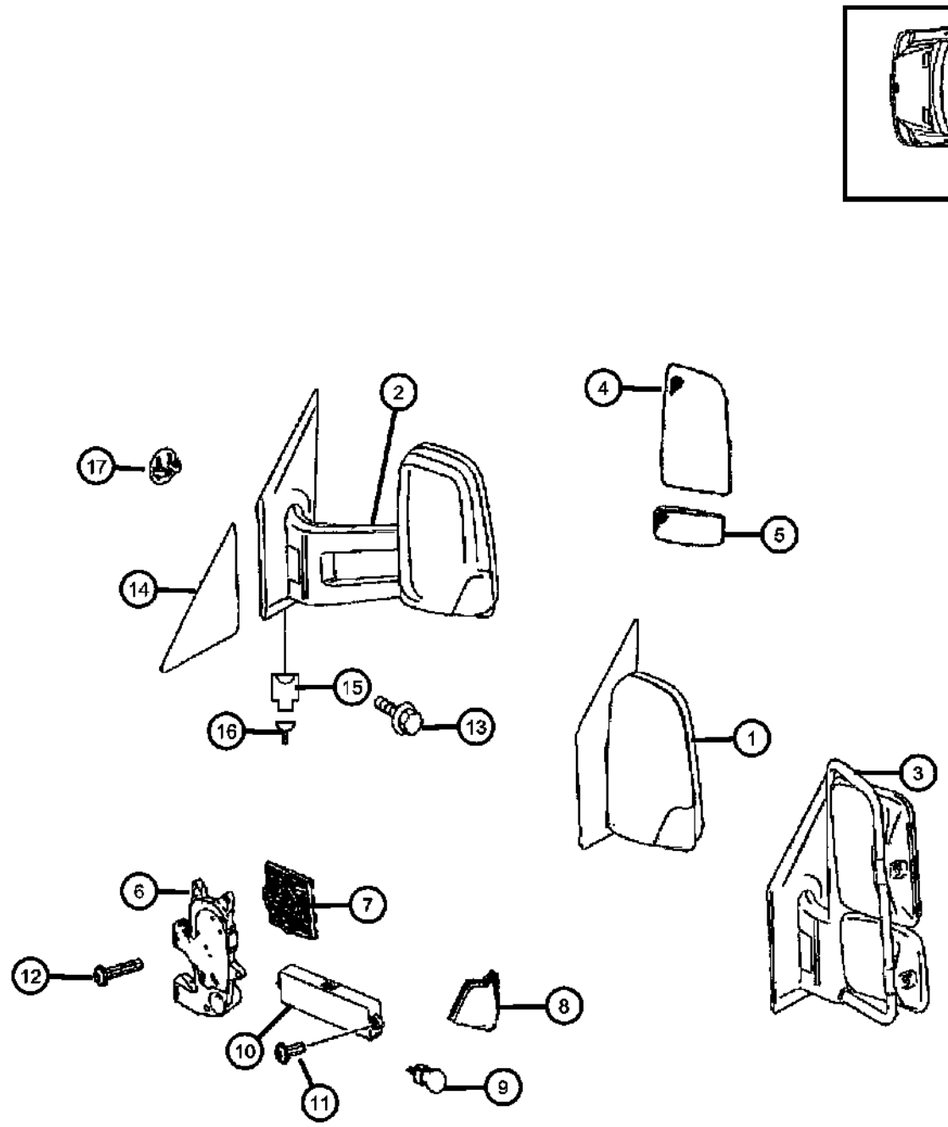

ITEM	PART NUMBER	QTY	LINE	SERIES	BODY	ENGINE	TRANS	TRIM	DESCRIPTION
NOTES: Sales Codes: [GTB] = Power Heated Mirrors									
1									MIRROR, Outside Rearview
	68009980AA	1	2, 3, 6, 7	L					With [GTB] Without [XAG], Right
	68009981AA	1	2, 3, 6, 7	L					With [GTB] Without [XAG], Left
	68009988AA	1	2, 3, 6, 7	L	03, 05, 13, 15, 17				Without [GTB & XAG], Right
	68009989AA	1	2, 3, 6, 7	L	03, 05, 13, 15, 17				Without [GTB & XAG], Left
	68009982AA	1	2, 3, 6, 7	L	13, 15, 17, 53, 55				With [GTB & XAG], Right
	68009983AA	1	2, 3, 6, 7	L	13, 15, 17, 53, 55				With [GTB & XAG], Left
2									MIRROR, Outside Rearview
	68009974AA	1	3, 7	L	03, 05				With [XZE] Without [GTB], Right
	68009975AA	1	3, 7	L	03, 05				With [XZE] Without [GTB], Left
	68009976AA	1	3, 7	L	03, 05				With [XZE+GTB], Right
	68009977AA	1	3, 7	L	03, 05				With [XZE+GTB], Left
3									MIRROR, Outside Rearview
	68009978AA	1	3, 7	L	03, 05				With [GYA] / For United Parcel Service [UPS] / Brown In Color, Left
		1	2, 3, 6, 7	L	13, 15, 17				With [GYA] / For United Parcel Service [UPS] / Brown In Color, Left
	68009979AA	1	2, 3, 6, 7	L	03, 05, 13, 15, 17				With [GYB] / Black In Color, Left
	68009989AA	1	2, 3, 6, 7	L	03, 05, 13, 15, 17				With [GYB] / Black In Color, Right
	68010088AA	1	3, 7	L	03, 05				With [GYA] / For United Parcel Service [UPS] / Brown In Color, Right
		1	2, 3, 6, 7	L	13, 15, 17				With [GYA] / For United Parcel Service [UPS] / Brown In Color, Right
4									GLASS, Mirror Replacement
	68009992AA	1	2, 3, 6, 7	L	13, 15, 17				Without [XAG], Left, Upper
	68009993AA	1	2, 3, 6, 7	L	13, 15, 17, 53, 55				With [GTB + XAG], Left, Upper

SPRINTER (VB)

SERIES	LINE	BODY	ENGINE	TRANSMISSION
L = LOWLINE	3 = HD DODGE 2WD 6 = Lt. Duty DODGE 4WD 2 = Med. Duty DODGE 2WD 7 = Med. Duty DODGE 4WD	17 = VAN WHEEL BASE 7 55 = WAGON WHEEL BASE 5 15 = VAN WHEEL BASE 5 53 = 119 WB 13 = 119 WB 05 = CAB CHASSIS WHEEL BASE 5 03 = CAB CHASSIS WHEEL BASE 3	EG2 = 3.5L V6 Gas Engine EXM = 3.0L V6 Turbo Diesel Engine	DGZ = 5-Speed Auto W5A380 Transmission

Mirror, Exterior, Outside Rear View Mirror
Figure 30-510

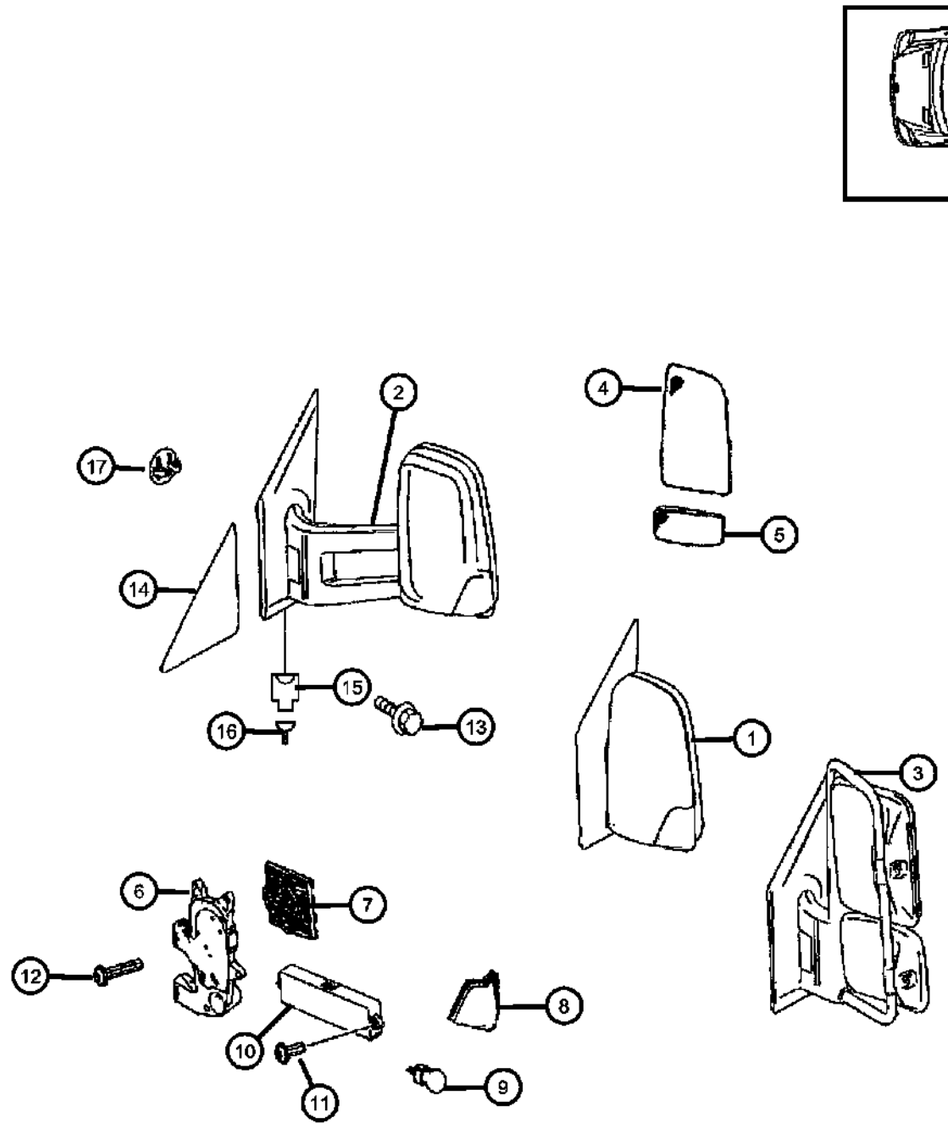

ITEM	PART NUMBER	QTY	LINE	SERIES	BODY	ENGINE	TRANS	TRIM	DESCRIPTION
	68010092AA	1	3, 7	L	03, 05				With [XZE] Without [GTB], Right, Upper
		1	2, 3, 6, 7	L	13, 15, 17				Without [XAG], Right, Upper
	68010118AA	1	2, 3, 6, 7	L	13, 15, 17, 53, 55				With [GTB + XAG], Right, Upper
		1	3, 7	L	03, 05				With [XZE] Without [GTB], Left, Upper
5									GLASS, Mirror Replacement
	68009995AA	1	2, 3, 6, 7	L					Without [GYA] & Without [GYB], Lower, Left
	68010093AA	1	2, 3, 6, 7	L					Without [GYA] & Without [GYB], Lower, Right
6									MOTOR, Mirror
	68009997AA	1	3, 7	L	03, 05				With [GTB], Right & Left
		1	2, 3, 6, 7	L	13, 15, 17, 53, 55				With [GTB], Right & Left
7	68009996AA	1	2, 3, 6, 7	L					ADJUSTER, Without [GTB] Manual Mirror
8									LAMP, Side Repeater
	68010001AA	1	2, 3, 6, 7	L					Left
	68010096AA	1	2, 3, 6, 7	L					Right
9	68010004AA	1	2, 3, 6, 7	L					SOCKET, Socket & Bulb
10									DISPLAY, Parking Assist
	68010003AA	1	2, 3, 6, 7	L	13, 15, 17, 53, 55				With [GTB & XAG], Left
	68010120AA	1	2, 3, 6, 7	L	13, 15, 17, 53, 55				With [GTB & XAG], Right
11	06104625AA	2	2, 3, 6, 7	L	13, 15, 17, 53, 55				SCREW
12	06104629AA	4	2, 3, 6, 7	L	13, 15, 17, 53, 55				SCREW, Mirror Motor Mounting
13									SCREW, Hex Flange Head
	06104121AA	2	2, 3, 6, 7	L	13, 15, 17, 53, 55				Mirror Assembly To Door [M6x16]
		2	3, 7	L	03, 05				Mirror Assembly To Door [M6x16]
14									COVER, Mirror Flag
	68009990AA	1	2, 3, 6, 7	L					Left
	68010090AA	1	2, 3, 6, 7	L					Right

SPRINTER (VB)

SERIES	LINE	BODY	ENGINE	TRANSMISSION
L = LOWLINE	3 = HD DODGE 2WD 6 = Lt. Duty DODGE 4WD 2 = Med. Duty DODGE 2WD 7 = Med. Duty DODGE 4WD	17 = VAN WHEEL BASE 7 55 = WAGON WHEEL BASE 5 15 = VAN WHEEL BASE 5 53 = 119 WB 13 = 119 WB 05 = CAB CHASSIS WHEEL BASE 5 03 = CAB CHASSIS WHEEL BASE 3	EG2 = 3.5L V6 Gas Engine EXM = 3.0L V6 Turbo Diesel Engine	DGZ = 5-Speed Auto W5A380 Transmission

Mirror, Exterior, Outside Rear View Mirror
Figure 30-510

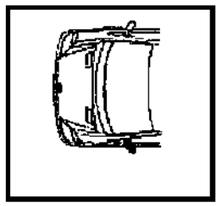

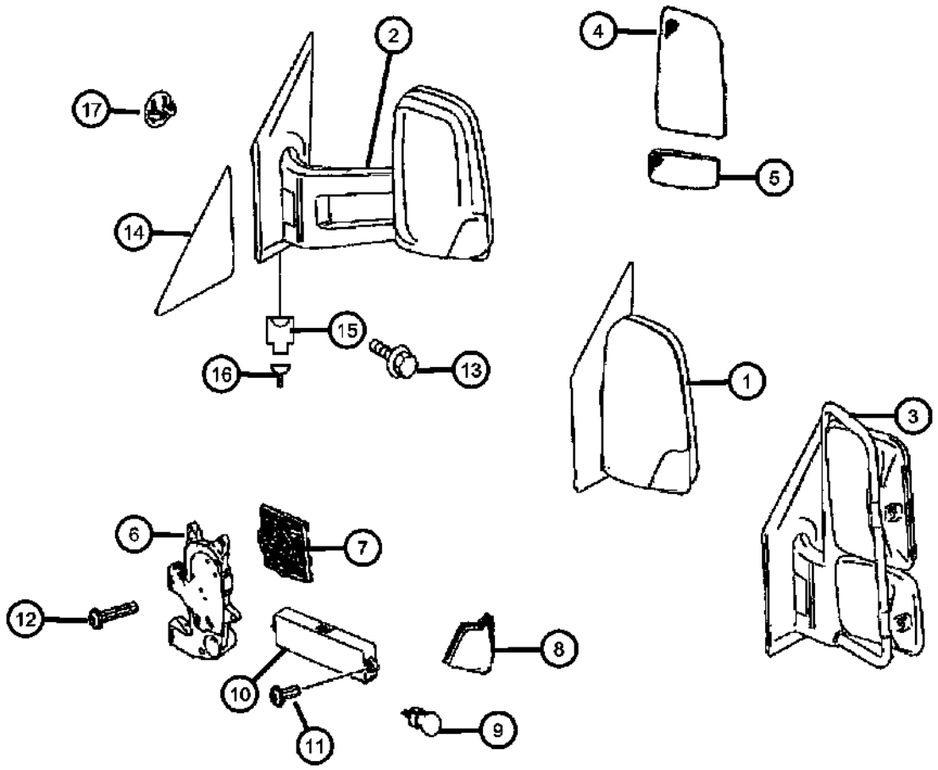

ITEM	PART NUMBER	QTY	LINE	SERIES	BODY	ENGINE	TRANS	TRIM	DESCRIPTION
15									INSULATOR, 6 Way
	05120260AA	1	2, 3, 6, 7	L	13, 15, 17, 53, 55				[6 Pin / M21/6]
		1	3, 7	L	03, 05				[6 Pin / M21/6]
16									TERMINAL
	05103873AA	3	3, 7	L	03, 05				[.75 MM2 MQS;M21/6]
		3	2, 3, 6, 7	L	13, 15, 17, 53, 55				[.75 MM2 MQS;M21/6]
17									PLUG, Body
	05125552AA	1	3, 7	L	03, 05				Screw Cover
		1	2, 3, 6, 7	L	13, 15, 17, 53, 55				Screw Cover

SPRINTER (VB)

SERIES	LINE	BODY	ENGINE	TRANSMISSION
L = LOWLINE	3 = HD DODGE 2WD 6 = Lt. Duty DODGE 4WD 2 = Med. Duty DODGE 2WD 7 = Med. Duty DODGE 4WD	17 = VAN WHEEL BASE 7 55 = WAGON WHEEL BASE 5 15 = VAN WHEEL BASE 5 53 = 119 WB 13 = 119 WB 05 = CAB CHASSIS WHEEL BASE 5 03 = CAB CHASSIS WHEEL BASE 3	EG2 = 3.5L V6 Gas Engine EXM = 3.0L V6 Turbo Diesel Engine	DGZ = 5-Speed Auto W5A380 Transmission

Group - 40

Exterior Ornamentation

Group - 40 Exterior Ornamentation

Illustration Title — Group-Fig. No.

Moldings and Ornamentation

Exterior Ornamentation Moldings ..... Fig. 40 - 205
Exterior Ornamentation Moldings ..... Fig. 40 - 210
Exterior Ornamentation Splash Guards ..... Fig. 40 - 220

Grilles

Grilles ..... Fig. 40 - 405

040-200 Moldings and Ornamentation 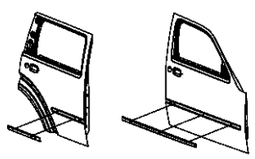	**040-400** Grilles 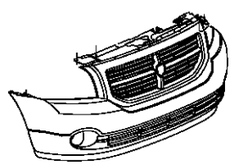		

Exterior Ornamentation Moldings
Figure 40-205

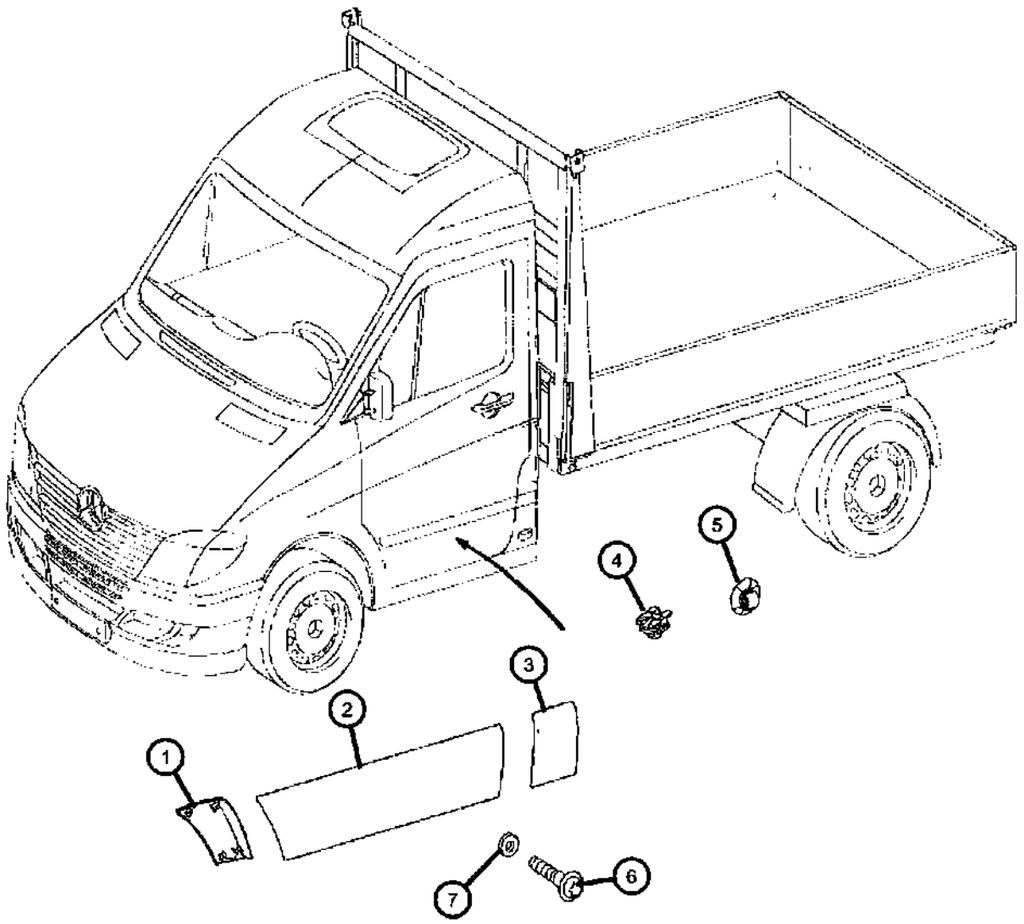

ITEM	PART NUMBER	QTY	LINE	SERIES	BODY	ENGINE	TRANS	TRIM	DESCRIPTION
1									MOLDING, Fender
	1HB77P01AA	1	2, 3, 6, 7	L					Right
	1JD64P01AA	1	2, 3, 6, 7	L					Left
2									MOLDING, Front Door
	1HB75P01AA	1	2, 3, 6, 7	L					Left
	1HB76P01AA	1	2, 3, 6, 7	L					Right
3									MOLDING, Cab
	1HE95P01AA	1	3, 7	L	03, 05				Left
	1HE96P01AA	1	3, 7	L	03, 05				Right
4	68014789AA	AR	3, 7	L	03, 05				CLIP, Molding
5	68014794AA	AR	3, 7	L	03, 05				CLIP, Molding
6	06104633AA	2	3, 7	L	03, 05				SCREW
7	68010043AA	2	2, 3, 6, 7	L					WASHER

SPRINTER (VB)

SERIES	LINE	BODY	ENGINE	TRANSMISSION
L = LOWLINE	3 = HD DODGE 2WD 6 = Lt. Duty DODGE 4WD 2 = Med. Duty DODGE 2WD 7 = Med. Duty DODGE 4WD	17 = VAN WHEEL BASE 7 55 = WAGON WHEEL BASE 5 15 = VAN WHEEL BASE 5 53 = 119 WB 13 = 119 WB 05 = CAB CHASSIS WHEEL BASE 5 03 = CAB CHASSIS WHEEL BASE 3	EG2 = 3.5L V6 Gas Engine EXM = 3.0L V6 Turbo Diesel Engine	DGZ = 5-Speed Auto W5A380 Transmission

AR = use ase required - = Non illustrrated part

<< RETURN TO GROUP INDEX

Exterior Ornamentation Moldings
Figure 40-210

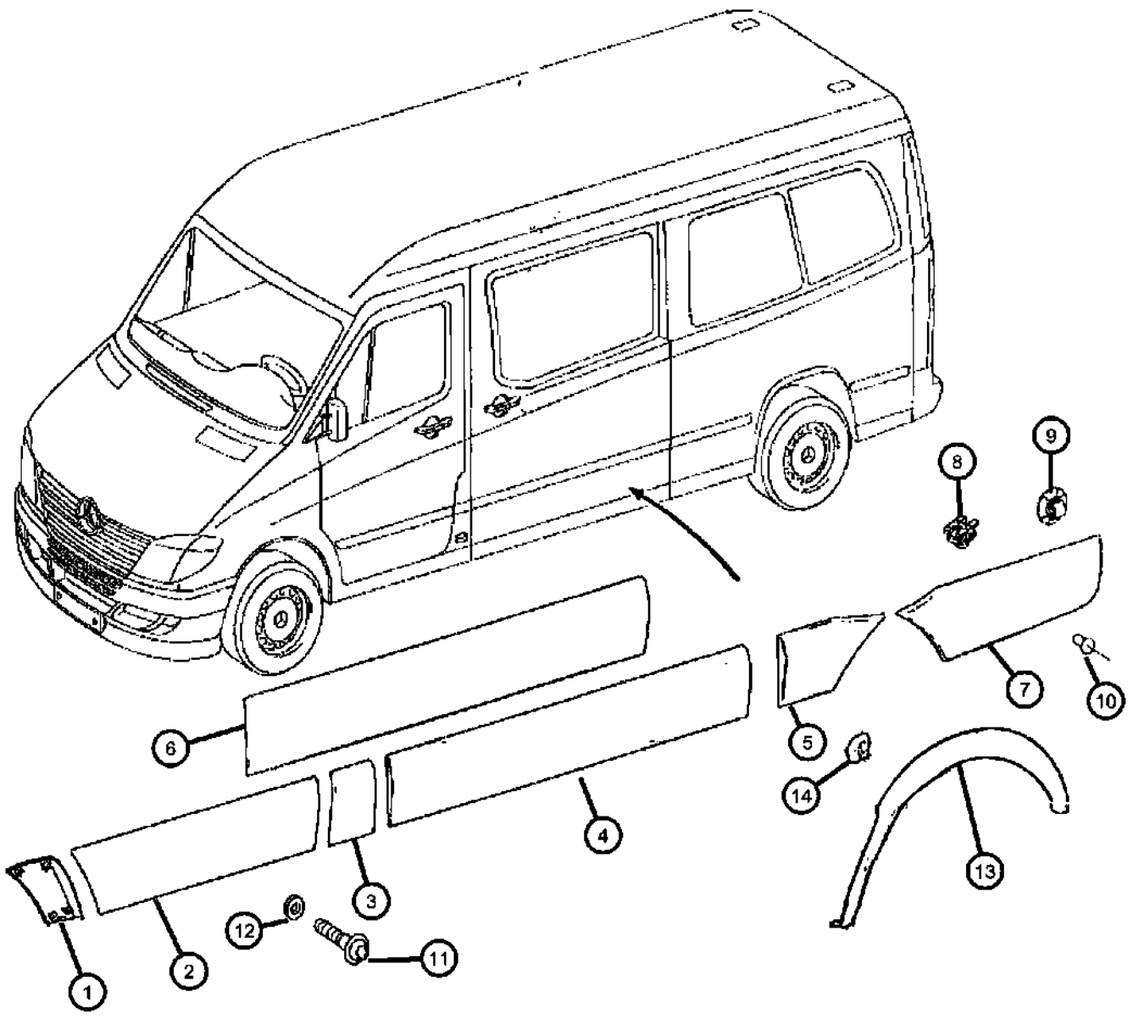

ITEM	PART NUMBER	QTY	LINE	SERIES	BODY	ENGINE	TRANS	TRIM	DESCRIPTION
1									MOLDING, Fender
	1HB77P01AA	1	2, 3, 6, 7	L					White, Right
	1HB77XDVAA	1	2, 3, 6, 7	L					Gray, Right
	1JD64P01AA	1	2, 3, 6, 7	L					White, Left
	1JD64XDVAA	1	2, 3, 6, 7	L					Gray, Left
2									MOLDING, Front Door
	1HB75P01AA	1	2, 3, 6, 7	L					White, Left
	1HB75XDVAA	1	2, 3, 6, 7	L					Gray, Left
	1HB76P01AA	1	2, 3, 6, 7	L					White, Right
	1HB76XDVAA	1	2, 3, 6, 7	L					Gray, Right
3									MOLDING, B-Pillar
	1HB78P01AA	1	2, 3, 6, 7	L	13, 15, 17, 53, 55				White, Left
	1HB78XDVAA	1	2, 3, 6, 7	L	13, 15, 17, 53, 55				Gray, Left
	1HB79P01AA	1	2, 3, 6, 7	L	13, 15, 17, 53, 55				White, Right
	1HB79XDVAA	1	2, 3, 6, 7	L	13, 15, 17, 53, 55				Gray, Right
4									MOLDING, Sliding Door
	1HB80P01AA	1	2, 3, 6, 7	L	13, 15, 17, 53, 55				White, Left
	1HB80XDVAA	1	2, 3, 6, 7	L	13, 15, 17, 53, 55				Gray, Left
5									MOLDING, Body Side
	1HB81P01AA	1	2, 3, 6, 7	L	15, 17, 55				White, Left
	1HB81XDVAA	1	2, 3, 6, 7	L	15, 17, 55				Gray, Left
	1HB82P01AA	1	2, 3, 6, 7	L	15, 17, 55				White, Right
	1HB82XDVAA	1	2, 3, 6, 7	L	15, 17, 55				Gray, Right
	1HB83P01AA	1	2, 3, 6, 7	L	13, 53				White, Left
	1HB83XDVAA	1	2, 3, 6, 7	L	13, 53				Gray, Left
	1HB84P01AA	1	2, 3, 6, 7	L	13, 53				White, Right
	1HB84XDVAA	1	2, 3, 6, 7	L	13, 53				Gray, Right
6									MOLDING, Sliding Door
	1HB80P01AA	1	2, 3, 6, 7	L	13, 15, 17, 53, 55				White, Left

SPRINTER (VB)

SERIES	LINE	BODY	ENGINE	TRANSMISSION
L = LOWLINE	3 = HD DODGE 2WD 6 = Lt. Duty DODGE 4WD 2 = Med. Duty DODGE 2WD 7 = Med. Duty DODGE 4WD	17 = VAN WHEEL BASE 7 55 = WAGON WHEEL BASE 5 15 = VAN WHEEL BASE 5 53 = 119 WB 13 = 119 WB 05 = CAB CHASSIS WHEEL BASE 5 03 = CAB CHASSIS WHEEL BASE 3	EG2 = 3.5L V6 Gas Engine EXM = 3.0L V6 Turbo Diesel Engine	DGZ = 5-Speed Auto W5A380 Transmission

AR = use ase required - = Non illustrrated part

<< RETURN TO GROUP INDEX

Exterior Ornamentation Moldings
Figure 40-210

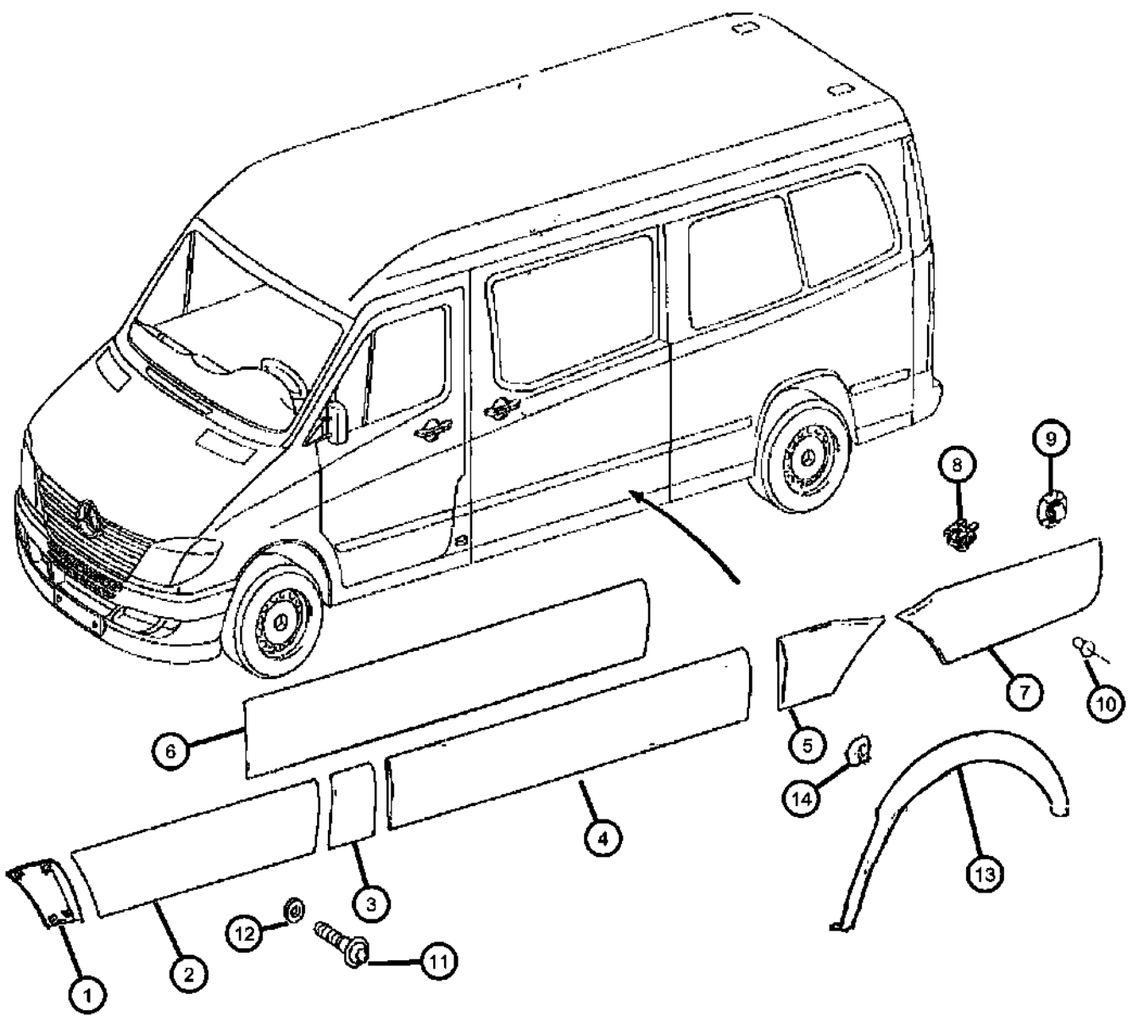

ITEM	PART NUMBER	QTY	LINE	SERIES	BODY	ENGINE	TRANS	TRIM	DESCRIPTION
	1HB80XDVAA	1	2, 3, 6, 7	L	13, 15, 17, 53, 55				Gray, Left
7									MOLDING, Body Side
	1HB85P01AA	1	2, 3, 6, 7	L	13, 53				White, Left
	1HB85XDVAA	1	2, 3, 6, 7	L	13, 53				Gray, Left
	1HB86P01AA	1	2, 3, 6, 7	L	13, 53				White, Right
	1HB86XDVAA	1	2, 3, 6, 7	L	13, 53				Gray, Right
	1HB87P01AA	1	2, 3, 6, 7	L	15, 55				White, Left
	1HB87XDVAA	1	2, 3, 6, 7	L	15, 55				Gray, Left
	1HB88P01AA	1	2, 3, 6, 7	L	15, 55				White, Right
	1HB88XDVAA	1	2, 3, 6, 7	L	15, 55				Gray, Right
	1HB89P01AA	1	2, 3, 6, 7	L	17				White, Left
	1HB89XDVAA	1	2, 3, 6, 7	L	17				Gray, Left
	1HB90P01AA	1	2, 3, 6, 7	L	17				White, Right
	1HB90XDVAA	1	2, 3, 6, 7	L	17				Gray, Right
8									CLIP, Molding
	68014789AA	AR	3, 7	L	03, 05				
		AR	2, 3, 6, 7	L	13, 15, 17, 53, 55				
9									CLIP, Molding
	68014794AA	AR	3, 7	L	03, 05				
		AR	2, 3, 6, 7	L	13, 15, 17, 53, 55				
10									RIVET, Plastic
	1AR96DX9AA	3	3, 7	L	03, 05				
		3	2, 3, 6, 7	L	13, 15, 17, 53, 55				
11	06104633AA	1	2, 3, 6, 7	L					SCREW
12	68010043AA	2	2, 3, 6, 7	L					WASHER
13									MOLDING, Wheel Opening Flare
	1HE92XDVAA	1	2, 3, 6, 7	L	13, 15, 17, 53, 55				Right

SPRINTER (VB)

SERIES	LINE	BODY	ENGINE	TRANSMISSION
L = LOWLINE	3 = HD DODGE 2WD 6 = Lt. Duty DODGE 4WD 2 = Med. Duty DODGE 2WD 7 = Med. Duty DODGE 4WD	17 = VAN WHEEL BASE 7 55 = WAGON WHEEL BASE 5 15 = VAN WHEEL BASE 5 53 = 119 WB 13 = 119 WB 05 = CAB CHASSIS WHEEL BASE 5 03 = CAB CHASSIS WHEEL BASE 3	EG2 = 3.5L V6 Gas Engine EXM = 3.0L V6 Turbo Diesel Engine	DGZ = 5-Speed Auto W5A380 Transmission

AR = use ase required - = Non illustrrated part

<< RETURN TO GROUP INDEX

Exterior Ornamentation Moldings
Figure 40-210

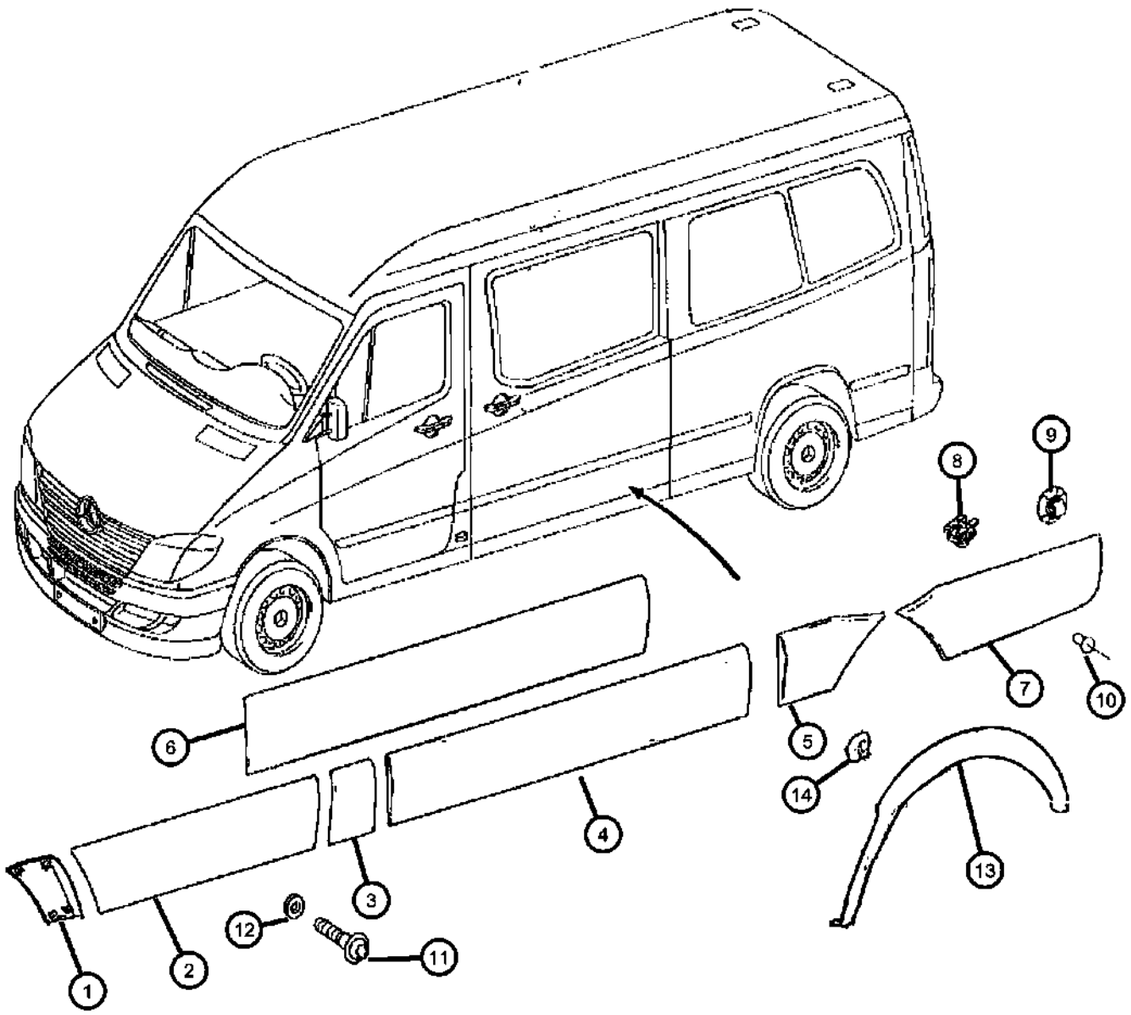

ITEM	PART NUMBER	QTY	LINE	SERIES	BODY	ENGINE	TRANS	TRIM	DESCRIPTION
	1HE93XDVAA	1	2, 3, 6, 7	L	13, 15, 17, 53, 55				Left
14	68014795AA	1	2, 3, 6, 7	L	13, 15, 17, 53, 55				CLIP

SPRINTER (VB)

SERIES	LINE	BODY	ENGINE	TRANSMISSION
L = LOWLINE	3 = HD DODGE 2WD 6 = Lt. Duty DODGE 4WD 2 = Med. Duty DODGE 2WD 7 = Med. Duty DODGE 4WD	17 = VAN WHEEL BASE 7 55 = WAGON WHEEL BASE 5 15 = VAN WHEEL BASE 5 53 = 119 WB 13 = 119 WB 05 = CAB CHASSIS WHEEL BASE 5 03 = CAB CHASSIS WHEEL BASE 3	EG2 = 3.5L V6 Gas Engine EXM = 3.0L V6 Turbo Diesel Engine	DGZ = 5-Speed Auto W5A380 Transmission

Exterior Ornamentation Splash Guards
Figure 40-220

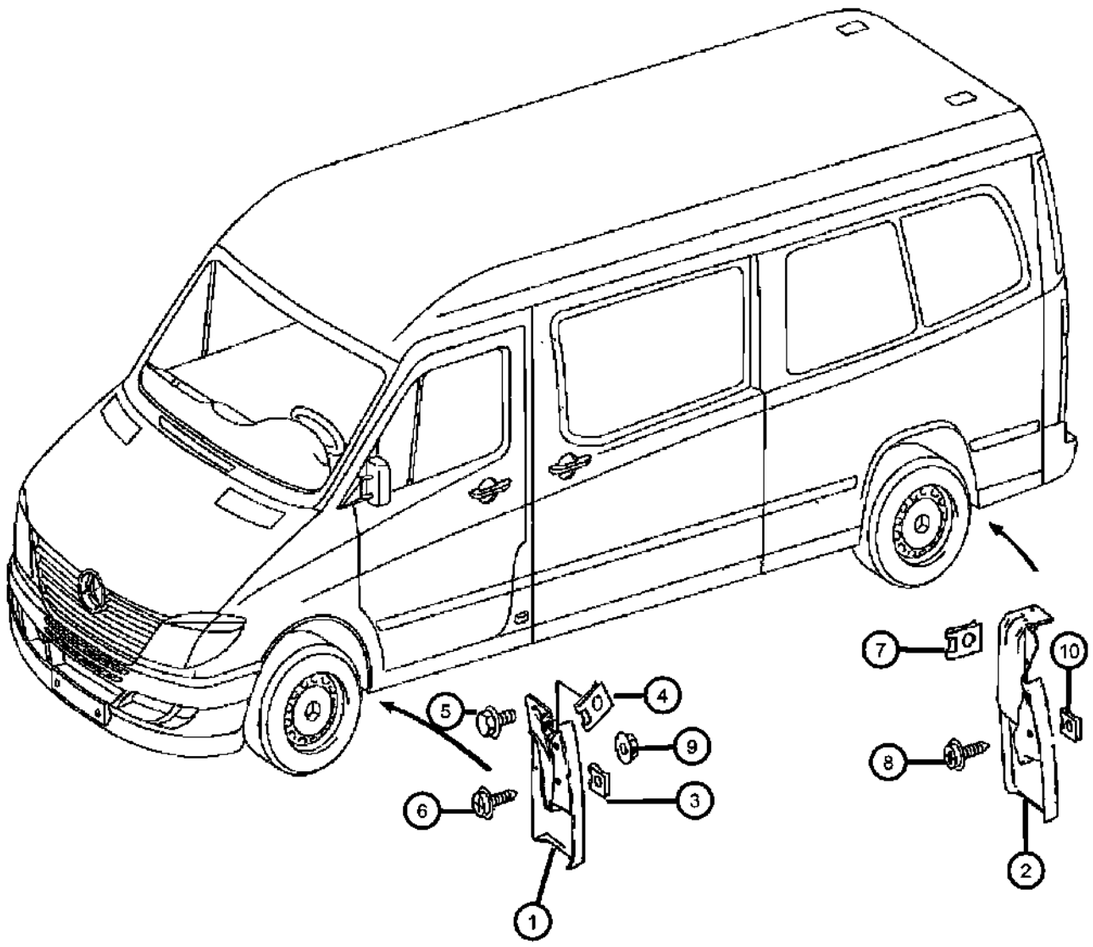

ITEM	PART NUMBER	QTY	LINE	SERIES	BODY	ENGINE	TRANS	TRIM	DESCRIPTION
1									GUARD, Splash
	1HE90DX9AA	1	2, 3, 6, 7	L					Left
	1HE91DX9AA	1	2, 3, 6, 7	L					Right
2									GUARD, Splash
	1HQ54DX9AA	1	2, 6	L	13, 15, 17, 53, 55				Right
	1HQ55DX9AA	1	2, 6	L	13, 15, 17, 53, 55				Left
3	06104737AA	4	2, 3, 6, 7	L	13, 15, 17, 53, 55				CLIP, CLIP-SPRING
4									CLIP, Spring
	06104735AA	4	2, 3, 6, 7	L	13, 15, 17, 53, 55				
		4	3, 7	L	03, 05				
5	06104635AA	2	2, 3, 6, 7	L	13, 15, 17, 53, 55				SCREW, Tapping Round Head, M5.0X2.24X20.00
6									SCREW, Tapping
	06104615AA	8	3, 7	L	03, 05				
		8	2, 3, 6, 7	L	13, 15, 17, 53, 55				
7	06104737AA	4	2, 3, 6, 7	L	13, 15, 17, 53, 55				CLIP, CLIP-SPRING
8									SCREW, Tapping
	06104615AA	8	3, 7	L	03, 05				
		8	2, 3, 6, 7	L	13, 15, 17, 53, 55				
9	68004878AA	4	2, 3, 6, 7	L	13, 15, 17, 53, 55				NUT
10	68004878AA	4							CLIP, (NOT SERVICED)

SPRINTER (VB)

SERIES	LINE	BODY	ENGINE	TRANSMISSION
L = LOWLINE	3 = HD DODGE 2WD 6 = Lt. Duty DODGE 4WD 2 = Med. Duty DODGE 2WD 7 = Med. Duty DODGE 4WD	17 = VAN WHEEL BASE 7 55 = WAGON WHEEL BASE 5 15 = VAN WHEEL BASE 5 53 = 119 WB 13 = 119 WB 05 = CAB CHASSIS WHEEL BASE 5 03 = CAB CHASSIS WHEEL BASE 3	EG2 = 3.5L V6 Gas Engine EXM = 3.0L V6 Turbo Diesel Engine	DGZ = 5-Speed Auto W5A380 Transmission

Grilles
Figure 40-405

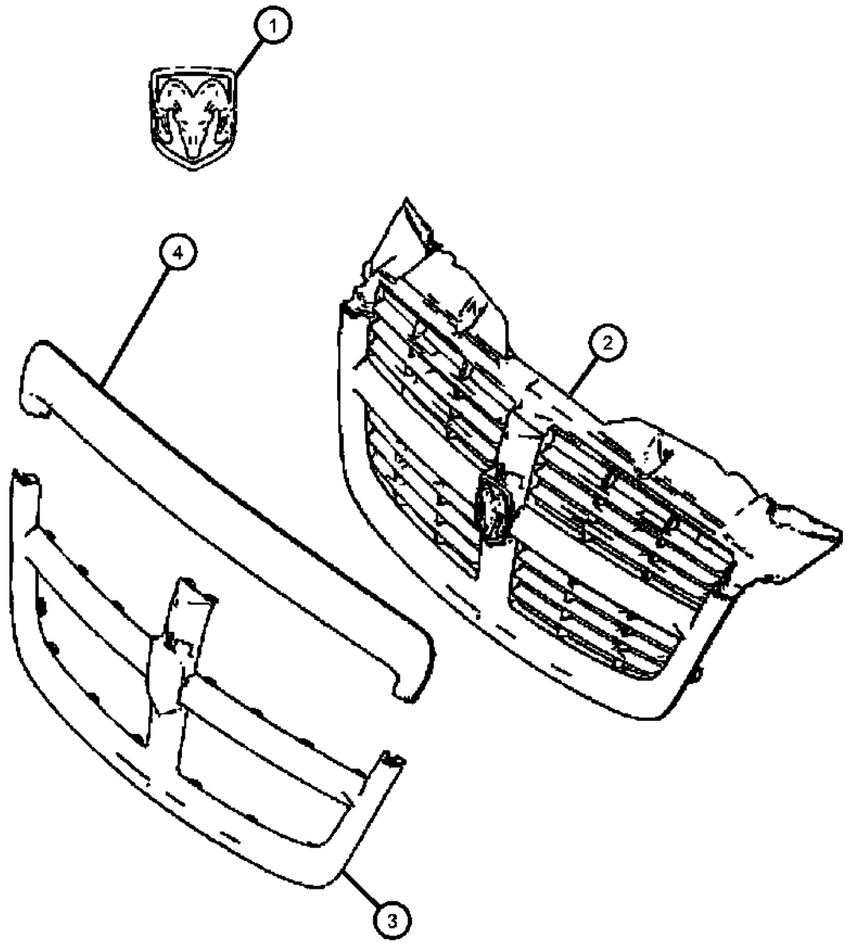

ITEM	PART NUMBER	QTY	LINE	SERIES	BODY	ENGINE	TRANS	TRIM	DESCRIPTION
1	68006601AA	1	2, 3	L					MEDALLION, Ram Head
2	1HQ77DX9AA	1	6, 7	L					GRILLE, Radiator, [Freightliner]
3	1GY48DX9AA	1	2, 3	L					GRILLE, Radiator
4	68020895AA	1	6, 7	L					MOLDING, Hood, Includes Name Plate [Freightliner]

SPRINTER (VB)

SERIES	LINE	BODY	ENGINE	TRANSMISSION
L = LOWLINE	3 = HD DODGE 2WD 6 = Lt. Duty DODGE 4WD 2 = Med. Duty DODGE 2WD 7 = Med. Duty DODGE 4WD	17 = VAN WHEEL BASE 7 55 = WAGON WHEEL BASE 5 15 = VAN WHEEL BASE 5 53 = 119 WB 13 = 119 WB 05 = CAB CHASSIS WHEEL BASE 5 03 = CAB CHASSIS WHEEL BASE 3	EG2 = 3.5L V6 Gas Engine EXM = 3.0L V6 Turbo Diesel Engine	DGZ = 5-Speed Auto W5A380 Transmission

Group - 50

Interior Trim

Group - 50 Interior Trim

Illustration Title — Group-Fig. No.

Headliners-Visors-Assist Straps

Sun Visor & Inside Mirror ..... Fig. 50 - 105
Sun Visor & Inside Mirror ..... Fig. 50 - 110
Headliner ..... Fig. 50 - 115
Headliner - Rail System ..... Fig. 50 - 145
Headliner - Rail System ..... Fig. 50 - 146

Panels-Moldings-Scuff Plates, Pillar, Cowl, 1/4 Panel Trim and Cargo Covers

Interior Moldings And Pillars ..... Fig. 50 - 202
Rear Wall Panel ..... Fig. 50 - 205
Interior Moldings and Pillars ..... Fig. 50 - 210
Quarter Trim Panel ..... Fig. 50 - 215
Rear Cab Trim Panel ..... Fig. 50 - 220
Inner Paneling Sidewall, Plastic ..... Fig. 50 - 225
Inner Paneling Sidewall, Fabric ..... Fig. 50 - 230
Window Airbag, Head Side Airbag ..... Fig. 50 - 250
Cargo Organizer, Cargo Retainers ..... Fig. 50 - 275
Cargo Organizer Partition Wall/Load Protection ..... Fig. 50 - 280
Cargo Organizer Partition Wall with Sliding Door ..... Fig. 50 - 285

Carpets, Floor Mats, Load Floor, and Silencers

Foot Rest ..... Fig. 50 - 345
Load Floor Cargo ..... Fig. 50 - 355

050-100 Headliners-Visors-Assist Straps	**050-200** Panels-Moldings-Scuff Plates, Pillar, Cowl, 1/4 Panel Trim and Cargo Covers	**050-300** Carpets, Floor Mats, Load Floor, and Silencers	

Sun Visor & Inside Mirror
Figure 50-105

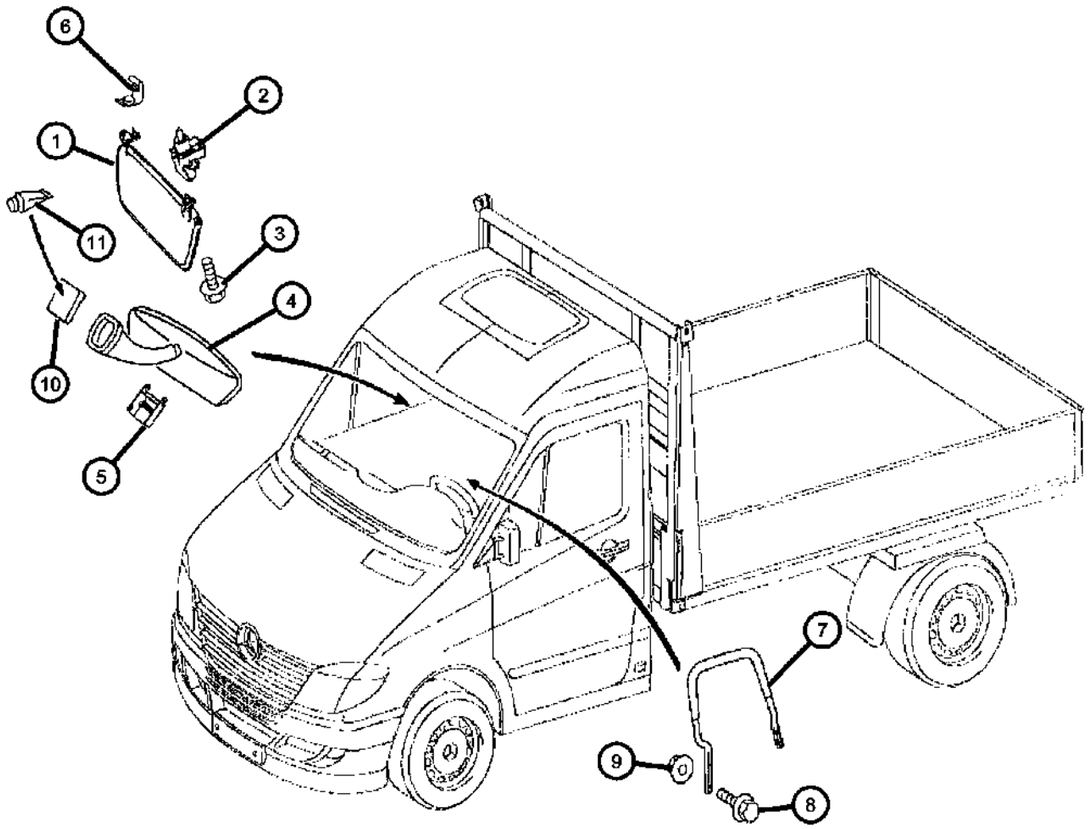

ITEM	PART NUMBER	QTY	LINE	SERIES	BODY	ENGINE	TRANS	TRIM	DESCRIPTION
1									VISOR
	1GY42KDVAA	1	2, 3, 6, 7	L				*A6	Left
		1	2, 3, 6, 7	L				*E7	Left
		1	2, 3, 6, 7	L				*F7	Left
	1GY43KDVAA	1	2, 3, 6, 7	L				*A6	Right
		1	2, 3, 6, 7	L				*E7	Right
		1	2, 3, 6, 7	L				*F7	Right
2									RETAINER, Visor
	1HQ43KD-VAA	2	2, 3, 6, 7	L				*E7	Right & Left
		2	2, 3, 6, 7	L				*F7	Right & Left
		2	2, 3, 6, 7	L				*A6	Right & Left
3	68014329AA	4	2, 3, 6, 7	L					SCREW, [M6x25]
4									MIRROR, Inside Rear View
	05104435AA	1	2, 3, 6, 7	L					With [GNA] Without [NHW]
	68017272AA	1	2, 3, 6, 7	L					With [GNA + NHW]
5	68017273AA	1	2, 3, 6, 7	L					COVER
6									CLIP, Visor
	1HB00XDVAA	2	2, 3, 6, 7	L				*A6	
		2	2, 3, 6, 7	L				*E7	
		2	2, 3, 6, 7	L				*F7	
7									RETAINER
	1HE41DX9AA	1	2, 3, 6, 7	L				*A6	With [CSV], Left
		1	2, 3, 6, 7	L				*E7	With [CSV], Left
		1	2, 3, 6, 7	L				*F7	With [CSV], Left
	1HE85DX9AA	1	3, 7	L	03, 05			*A6	With [CSV], Right
		1	3, 7	L	03, 05			*E7	With [CSV], Right
		1	3, 7	L	03, 05			*F7	With [CSV], Right
8	06104157AB	3	3, 7	L	03, 05				BOLT, Torx Head, M8x1.25x35.00
9	06105169AA	2	3, 7	L	03, 05				NUT, [M8]
10	05104241AA	1	3, 7	L	03, 05				BUTTON, Rear View Mirror
11	05125662AB	1	2, 3, 6, 7	L					ADHESIVE

SPRINTER (VB)

SERIES	LINE	BODY	ENGINE	TRANSMISSION
L = LOWLINE	3 = HD DODGE 2WD 6 = Lt. Duty DODGE 4WD 2 = Med. Duty DODGE 2WD 7 = Med. Duty DODGE 4WD	17 = VAN WHEEL BASE 7 55 = WAGON WHEEL BASE 5 15 = VAN WHEEL BASE 5 53 = 119 WB 13 = 119 WB 05 = CAB CHASSIS WHEEL BASE 5 03 = CAB CHASSIS WHEEL BASE 3	EG2 = 3.5L V6 Gas Engine EXM = 3.0L V6 Turbo Diesel Engine	DGZ = 5-Speed Auto W5A380 Transmission

Sun Visor & Inside Mirror
Figure 50-110

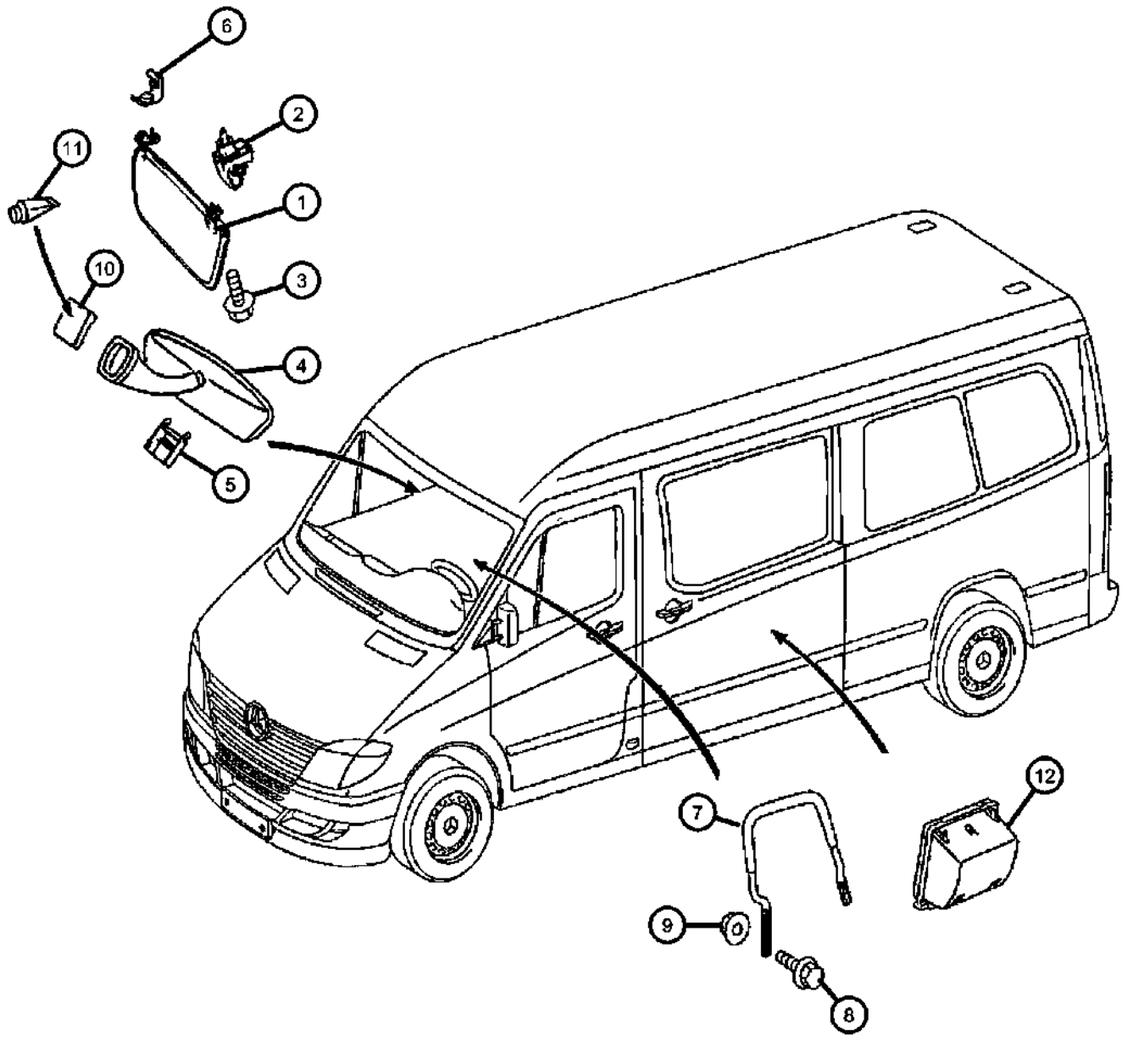

ITEM	PART NUMBER	QTY	LINE	SERIES	BODY	ENGINE	TRANS	TRIM	DESCRIPTION
1									VISOR
	1GY42KDVAA	1	2, 3, 6, 7	L				*A6	
		1	2, 3, 6, 7	L				*E7	
		1	2, 3, 6, 7	L				*F7	
2	1HQ43KD-VAA	2	2, 3, 6, 7	L				*E7	RETAINER, Visor
3	68014329AA	4	2, 3, 6, 7	L					SCREW
4									MIRROR, Inside Rear View
	05104435AA	1	2, 3, 6, 7	L					With [GNA] Day/Night Mirror
	68017272AA	1	2, 3, 6, 7	L					With [NHW] Light and Rain Sensor
5	68017273AA	1	2, 3, 6, 7	L					COVER
6	1HB00XDVAA	2	2, 3, 6, 7	L				*A6	CLIP, VisorRight & Left
7									RETAINER, Interior Double Seat Assist Handle
	1HE41DX9AA	1	2, 3, 6, 7	L				*A6	[A6]
		1	2, 3, 6, 7	L				*E7	[E7]
		1	2, 3, 6, 7	L				*F7	[F7]
8									BOLT, Torx Head, M8x1.25x35.00
	06104157AB	3	3, 7	L	03, 05				
		3	2, 3, 6, 7	L	13, 15, 17, 53, 55				
9	06105169AA	3	2, 3, 6, 7	L					NUT
10									BUTTON, Rear View Mirror
	05104241AA	1	3, 7	L	03, 05				
		1	2, 3, 6, 7	L	13, 15, 17, 53, 55				
11	05073862AA	2	2, 3, 6, 7	L					ADHESIVE
12	05124222AA	2	2, 6	L	53, 55				ASHTRAY

SPRINTER (VB)

SERIES	LINE	BODY	ENGINE	TRANSMISSION
L = LOWLINE	3 = HD DODGE 2WD 6 = Lt. Duty DODGE 4WD 2 = Med. Duty DODGE 2WD 7 = Med. Duty DODGE 4WD	17 = VAN WHEEL BASE 7 55 = WAGON WHEEL BASE 5 15 = VAN WHEEL BASE 5 53 = 119 WB 13 = 119 WB 05 = CAB CHASSIS WHEEL BASE 5 03 = CAB CHASSIS WHEEL BASE 3	EG2 = 3.5L V6 Gas Engine EXM = 3.0L V6 Turbo Diesel Engine	DGZ = 5-Speed Auto W5A380 Transmission

Headliner
Figure 50-115

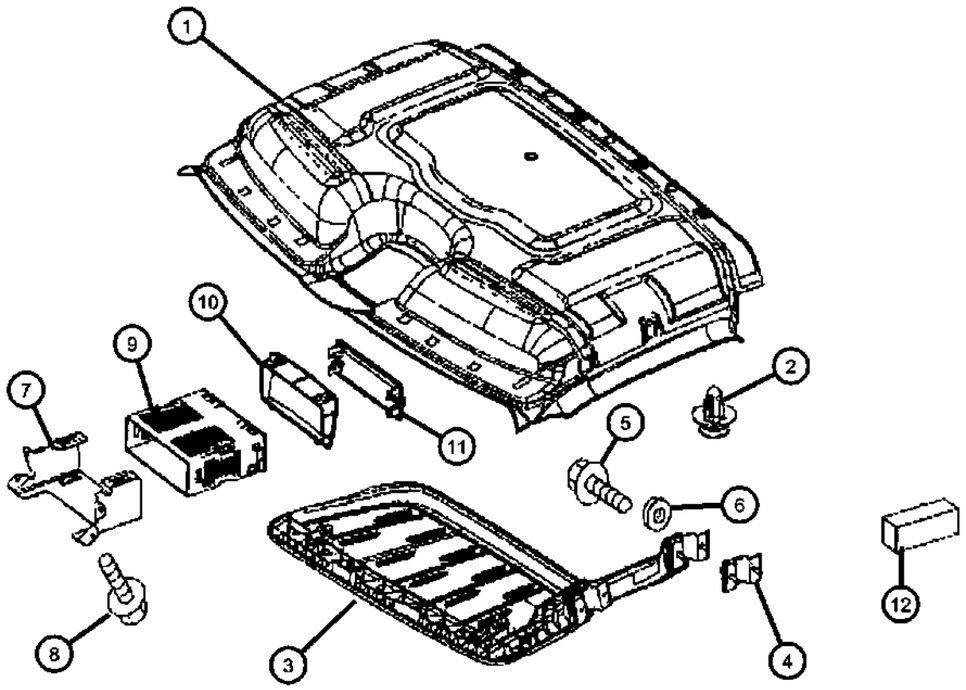

ITEM	PART NUMBER	QTY	LINE	SERIES	BODY	ENGINE	TRANS	TRIM	DESCRIPTION
1									HEADLINER
	1HA89ADVAA	1	2, 3, 6, 7	L				*A6	Front
		1	2, 3, 6, 7	L				*E7	Front
		1	2, 3, 6, 7	L				*F7	Front
2	05125569AA	4	3, 7	L	05, 03				CLIP, Headlining
3									TRAY, Cargo
	1HA97XDVAA	1	2, 3, 6, 7	L				*A6	With [CTB]
		1	2, 3, 6, 7	L				*E7	With [CTB]
		1	2, 3, 6, 7	L				*F7	With [CTB]
4	68014271AA	4	2, 3, 6, 7	L					BRACKET, With [CTB]
5	68004879AA	8	2, 3, 6, 7	L					SCREW, With [CTB]
6	05133908AA	4	3, 7	L	03, 05				WASHER, With [CTB]
7	68014285AA	1	2, 3, 6, 7	L					BRACKET
8	06104120AA	4	3, 7	L	03, 05				SCREW, Hex Head, M6x12, With [CK7]
9									BRACKET
	1HB93CSTAA	1	3, 7	L	03, 05			*A6	With [CK7]
		1	3, 7	L	03, 05			*E7	With [CK7]
		1	3, 7	L	03, 05			*F7	With [CK7]
10									BEZEL
	1HA99XDVAA	1	2, 3, 6, 7	L				*A6	With [CK7]
		1	2, 3, 6, 7	L				*E7	With [CK7]
		1	2, 3, 6, 7	L				*F7	With [CK7]
11	1HB94CSTAA	1	2, 3, 6, 7	L					COVER, With [CK7]
12	68014291AA	1	3, 7	L	03, 05				INSULATOR
-13	68031882AA	2	2, 3, 6, 7	L					INSULATION

SPRINTER (VB)

SERIES	LINE	BODY	ENGINE	TRANSMISSION
L = LOWLINE	3 = HD DODGE 2WD 6 = Lt. Duty DODGE 4WD 2 = Med. Duty DODGE 2WD 7 = Med. Duty DODGE 4WD	17 = VAN WHEEL BASE 7 55 = WAGON WHEEL BASE 5 15 = VAN WHEEL BASE 5 53 = 119 WB 13 = 119 WB 05 = CAB CHASSIS WHEEL BASE 5 03 = CAB CHASSIS WHEEL BASE 3	EG2 = 3.5L V6 Gas Engine EXM = 3.0L V6 Turbo Diesel Engine	DGZ = 5-Speed Auto W5A380 Transmission

Headliner - Rail System
Figure 50-145

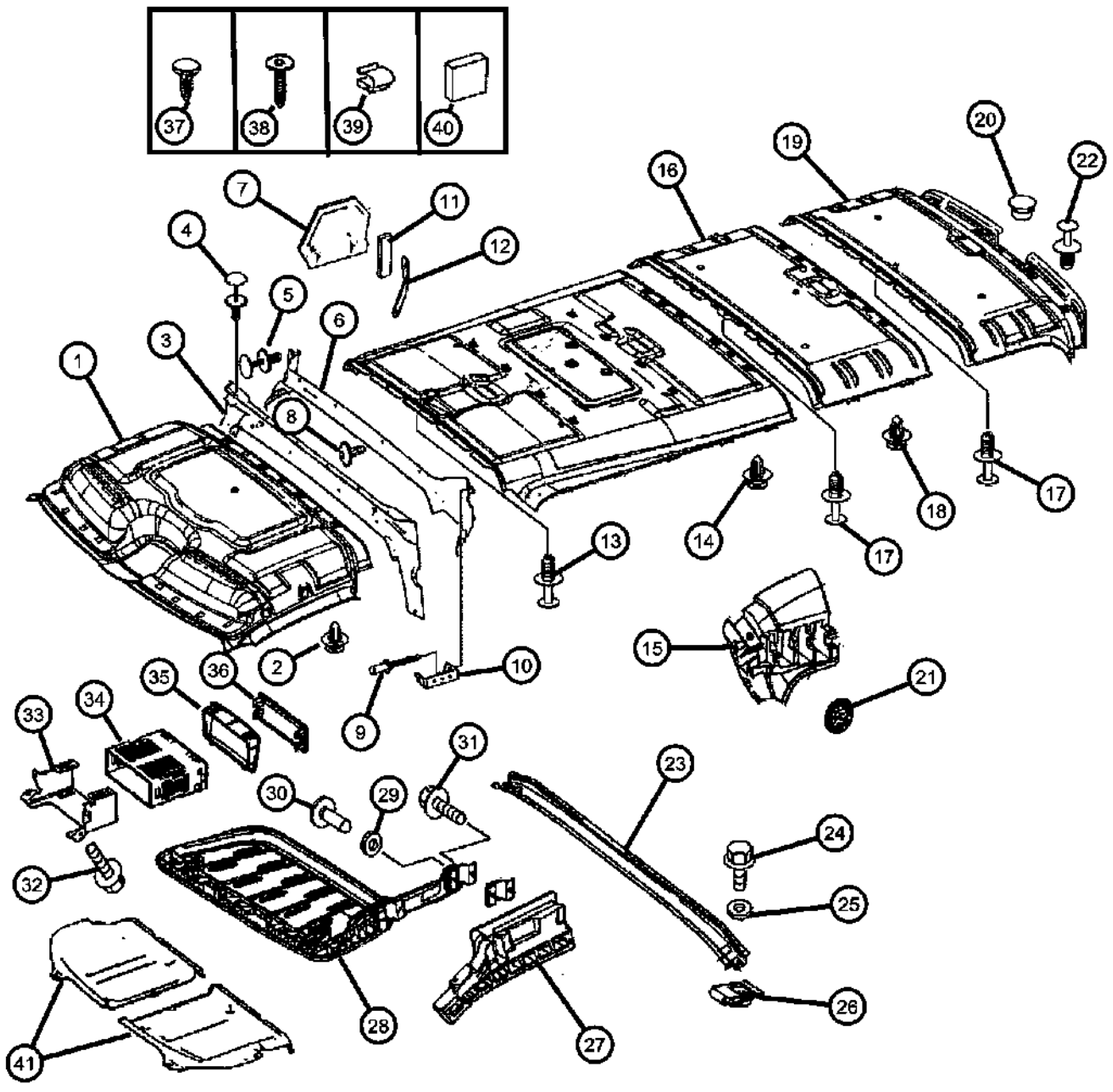

ITEM	PART NUMBER	QTY	LINE	SERIES	BODY	ENGINE	TRANS	TRIM	DESCRIPTION
Sales Codes [CJ4] = Side Front Air Bag [CK7] = Front Overhead Storage Bin [GWA] = Sunroof									
1									HEADLINER
	1HA89ADVAA	1	2, 3, 6, 7	L				*A6	[A4A6]
		1	2, 3, 6, 7	L				*E7	[A4E7]
		1	2, 3, 6, 7	L				*F7	[A4F7]
	1HA89TDVAA	1	2, 3, 6, 7	L				*A6	[A7A6]
		1	6, 7, 3, 2	L				*E7	[A7E7]
		1	2, 3, 6, 7	L				*F7	[A7F7]
	1HA90ADVAA	1	2, 3, 6, 7	L				*A6	[A4A6] With [GWA + CK7]
		1	2, 3, 6, 7	L				*E7	[A4E7] With [GWA + CK7]
		1	2, 3, 6, 7	L				*F7	[A4F7] With [GWA + CK7]
	1HA90TDVAA	1	2, 3, 6, 7	L				*A6	[A7A6] With [GWA + CK7]
		1	2, 3, 6, 7	L				*E7	[A7E7] With [GWA + CK7]
		1	2, 3, 6, 7	L				*F7	[A7F7] With [GWA + CK7]
	1HA91ADVAA	1	2, 6	L	13, 53			*A6	[A4A6] With [GWA]
		1	2, 6	L	13, 53			*E7	[A4E7] With [GWA]
		1	2, 6	L	13, 53			*F7	[A4F7] With [GWA]
	1HA91TDVAA	1	2, 6	L	13, 53			*A6	[A7A6] With [GWA]
		1	2, 6	L	13, 53			*E7	[A7E7] With [GWA]
		1	2, 6	L	13, 53			*F7	[A7F7] With [GWA]
	1HA92ADVAA	1	2, 3, 6, 7	L				*A6	[A4A6] With [CK7]
		1	2, 3, 6, 7	L				*E7	[A4E7] With [CK7]
		1	2, 3, 6, 7	L				*F7	[A4F7] With [CK7]
	1HA92TDVAA	1	2, 3, 6, 7	L				*A6	[A7A6] With [CK7]
		1	2, 3, 6, 7	L				*E7	[A7E7] With [CK7]
		1	2, 3, 6, 7	L				*F7	[A7F7] With [CK7]
	1HA93ADVAA	1	2, 3, 6, 7	L				*A6	[A4A6] With [CJ4 + GWA]
		1	2, 3, 6, 7	L				*E7	[A4E7] With [CJ4 + GWA]
		1	2, 3, 6, 7	L				*F7	[A4F7] With [CJ4 + GWA]
	1HA93TDVAA	1	2, 3, 6, 7	L				*A6	[A7A6] With [CJ4 + GWA]

SPRINTER (VB)

SERIES	LINE	BODY	ENGINE	TRANSMISSION
L = LOWLINE	3 = HD DODGE 2WD 6 = Lt. Duty DODGE 4WD 2 = Med. Duty DODGE 2WD 7 = Med. Duty DODGE 4WD	17 = VAN WHEEL BASE 7 55 = WAGON WHEEL BASE 5 15 = VAN WHEEL BASE 5 53 = 119 WB 13 = 119 WB 05 = CAB CHASSIS WHEEL BASE 5 03 = CAB CHASSIS WHEEL BASE 3	EG2 = 3.5L V6 Gas Engine EXM = 3.0L V6 Turbo Diesel Engine	DGZ = 5-Speed Auto W5A380 Transmission

Headliner - Rail System
Figure 50-145

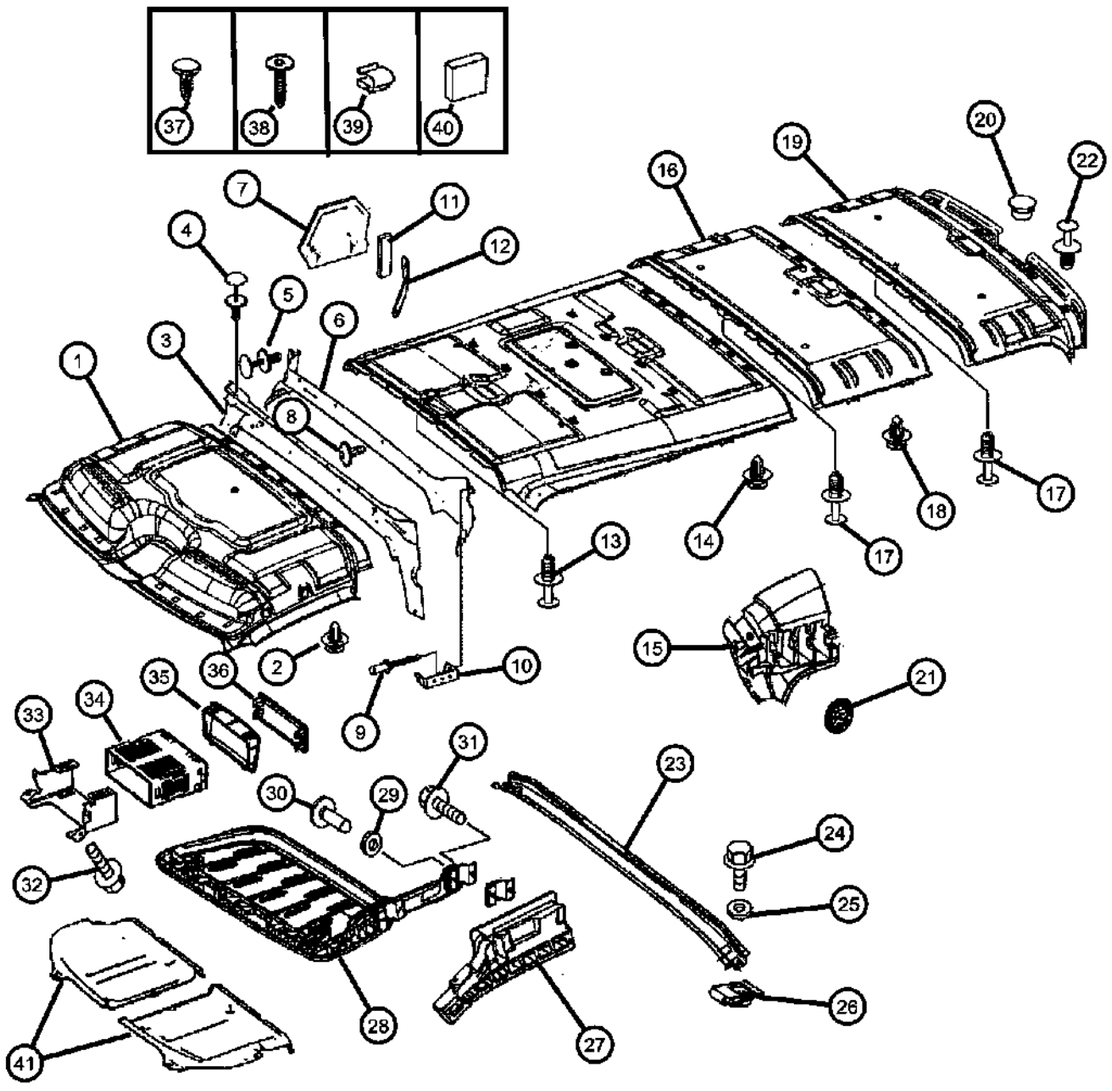

ITEM	PART NUMBER	QTY	LINE	SERIES	BODY	ENGINE	TRANS	TRIM	DESCRIPTION
		1	2, 3, 6, 7	L				*E7	[A7E7] With [CJ4 + GWA]
		1	2, 3, 6, 7	L				*F7	[A7F7] With [CJ4 + GWA]
	1HA94ADVAA	1	2, 3, 6, 7	L				*A6	[A4A6] With [CJ4+CK7+GWA]
		1	2, 3, 6, 7	L				*E7	[A4E7] With [CJ4+CK7+GWA]
		1	2, 3, 6, 7	L				*F7	[A4F7] With [CJ4+CK7+GWA]
	1HA94TDVAA	1	2, 3, 6, 7	L				*A6	[A7A6] With [CJ4+CK7+GWA]
		1	2, 3, 6, 7	L				*E7	[A7E7] With [CJ4+CK7+GWA]
		1	2, 3, 6, 7	L				*F7	[A7F7] With [CJ4+CK7+GWA]
	1HA95ADVAA	1	2, 3, 6, 7	L				*A6	[A4A6] With [CJ4+CK7]
		1	2, 3, 6, 7	L				*E7	[A4E7] With [CJ4+CK7]
		1	2, 3, 6, 7	L				*F7	[A4F7] With [CJ4+CK7]
	1HA95TDVAA	1	2, 3, 6, 7	L				*A6	[A7A6] With [CJ4+CK7]
		1	2, 3, 6, 7	L				*E7	[A7E7] With [CJ4+CK7]
		1	2, 3, 6, 7	L				*F7	[A7F7] With [CJ4+CK7]
	1HA96ADVAA	1	2, 3, 6, 7	L				*A6	[A4A6] With [CJ4]
		1	2, 3, 6, 7	L				*E7	[A4E7] With [CJ4]
		1	2, 3, 6, 7	L				*F7	[A4F7] With [CJ4]
	1HA96TDVAA	1	2, 3, 6, 7	L				*A6	[A7A6] With [CJ4]
		1	2, 3, 6, 7	L				*E7	[A7E7] With [CJ4]
		1	2, 3, 6, 7	L				*F7	[A7F7] With [CJ4]
2	05125569AA	4	2, 3, 6, 7	L	13, 15, 17, 53, 55				CLIP, Headlining
3									PANEL
	1HC42XDVAA	1	2, 3, 6, 7	L	13, 15, 17			*A6	
		1	2, 3, 6, 7	L	13, 15, 17			*E7	
		1	2, 3, 6, 7	L	13, 15, 17			*F7	
4	68006483AA	18	2, 3, 6, 7	L	13, 15, 17, 53, 55				RIVET
5									RIVET
	1HC04NC-VAA	2	2, 3, 6, 7	L				*A6	
		2	2, 3, 6, 7	L				*E7	
		2	2, 3, 6, 7	L				*F7	

SPRINTER (VB)

SERIES	LINE	BODY	ENGINE	TRANSMISSION
L = LOWLINE	3 = HD DODGE 2WD 6 = Lt. Duty DODGE 4WD 2 = Med. Duty DODGE 2WD 7 = Med. Duty DODGE 4WD	17 = VAN WHEEL BASE 7 55 = WAGON WHEEL BASE 5 15 = VAN WHEEL BASE 5 53 = 119 WB 13 = 119 WB 05 = CAB CHASSIS WHEEL BASE 5 03 = CAB CHASSIS WHEEL BASE 3	EG2 = 3.5L V6 Gas Engine EXM = 3.0L V6 Turbo Diesel Engine	DGZ = 5-Speed Auto W5A380 Transmission

Headliner - Rail System
Figure 50-145

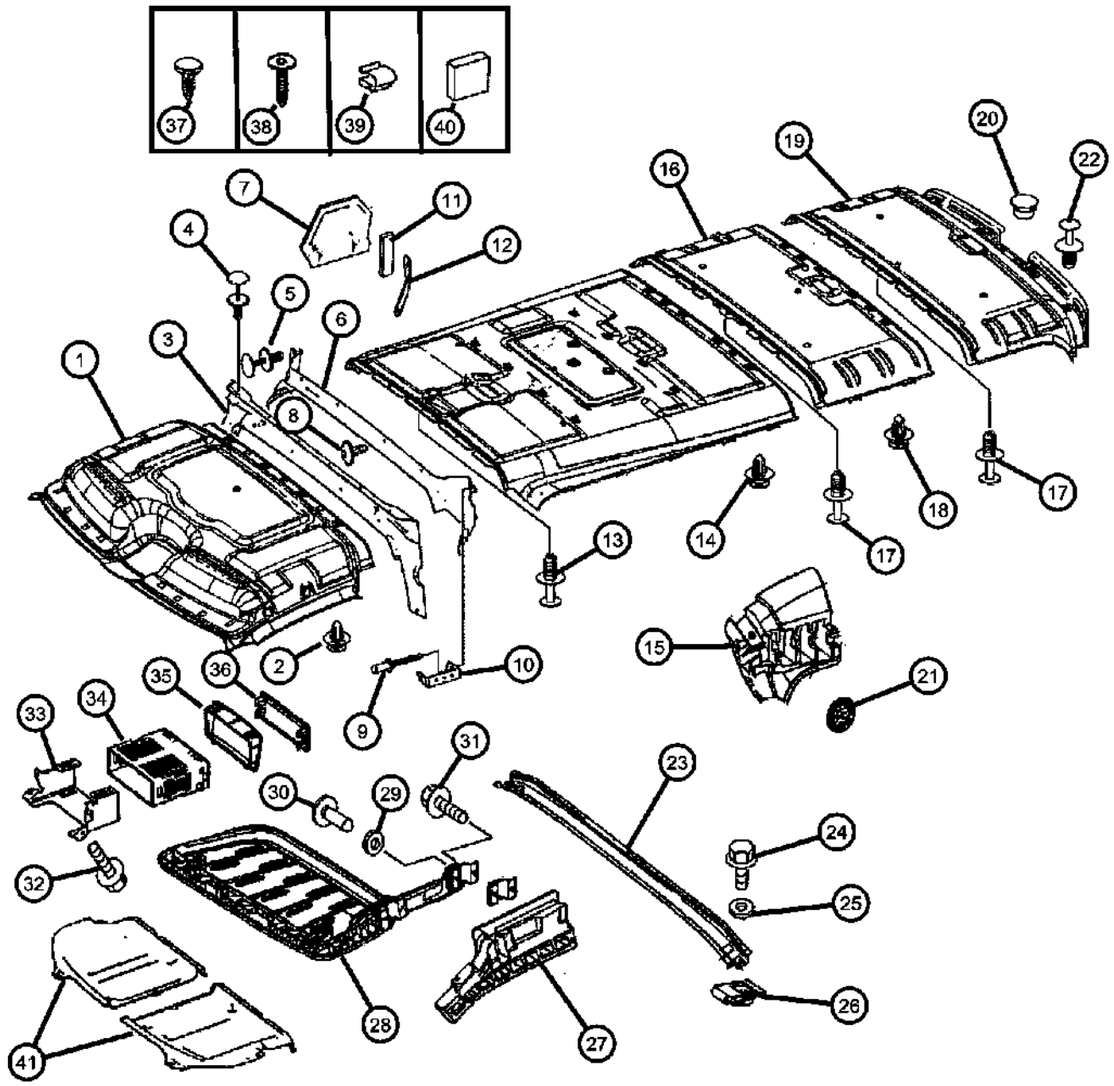

ITEM	PART NUMBER	QTY	LINE	SERIES	BODY	ENGINE	TRANS	TRIM	DESCRIPTION
6									COVER
	1HC00XDVAA	1	2, 3, 6, 7	L	13, 15, 17			*A6	With [GK9]
		1	2, 3, 6, 7	L	13, 15, 17			*E7	With [GK9]
		1	2, 3, 6, 7	L	13, 15, 17			*F7	With [GK9]
	1HC01XDVAA	1	2, 3, 6, 7	L	13, 15, 17, 53, 55			*A6	With [GKA + GKE]
		1	2, 3, 6, 7	L	13, 15, 17, 53, 55			*E7	With [GKA + GKE]
		1	2, 3, 6, 7	L	13, 15, 17, 53, 55			*F7	With [GKA + GKE]
	1HC02XDVAA	1	2, 3, 6, 7	L	13, 15, 17, 53, 55			*A6	With [GKA]
		1	2, 3, 6, 7	L	13, 15, 17, 53, 55			*E7	With [GKA]
		1	2, 3, 6, 7	L	13, 15, 17, 53, 55			*F7	With [GKA]
	1HC03XDVAA	1	2, 3, 6, 7	L	13, 15, 17, 53, 55			*A6	With [GKE]
		1	2, 3, 6, 7	L	13, 15, 17, 53, 55			*E7	With [GKE]
		1	2, 3, 6, 7	L	13, 15, 17, 53, 55			*F7	With [GKE]
7	68014282AA	1	2, 3, 6, 7	L	13, 15, 17				COVER
8									RIVET, Plastic
	1AR96DX9AA	1	2, 3, 6, 7	L	13, 15, 17, 53, 55			*A6	
		1	2, 3, 6, 7	L	13, 15, 17, 53, 55			*E7	
		1	2, 3, 6, 7	L	13, 15, 17, 53, 55			*F7	
9	05134061AA	8	2, 3, 6, 7	L	13, 15, 17, 53, 55				RIVET
10	68014184AA	2	2, 3, 6, 7	L					BRACKET
11	68014185AA	1	2, 3, 6, 7	L	13, 15, 17, 53, 55				SPACER
12	68014186AA	1	2, 3, 6, 7	L	13, 15, 17, 53, 55				BRACKET
13									RIVET, Plastic
	1AR96DX9AA	8	2, 3, 6, 7	L	13, 15, 17, 53, 55			*A6	

SPRINTER (VB)

SERIES	LINE	BODY	ENGINE	TRANSMISSION
L = LOWLINE	3 = HD DODGE 2WD 6 = Lt. Duty DODGE 4WD 2 = Med. Duty DODGE 2WD 7 = Med. Duty DODGE 4WD	17 = VAN WHEEL BASE 7 55 = WAGON WHEEL BASE 5 15 = VAN WHEEL BASE 5 53 = 119 WB 13 = 119 WB 05 = CAB CHASSIS WHEEL BASE 5 03 = CAB CHASSIS WHEEL BASE 3	EG2 = 3.5L V6 Gas Engine EXM = 3.0L V6 Turbo Diesel Engine	DGZ = 5-Speed Auto W5A380 Transmission

Headliner - Rail System
Figure 50-145

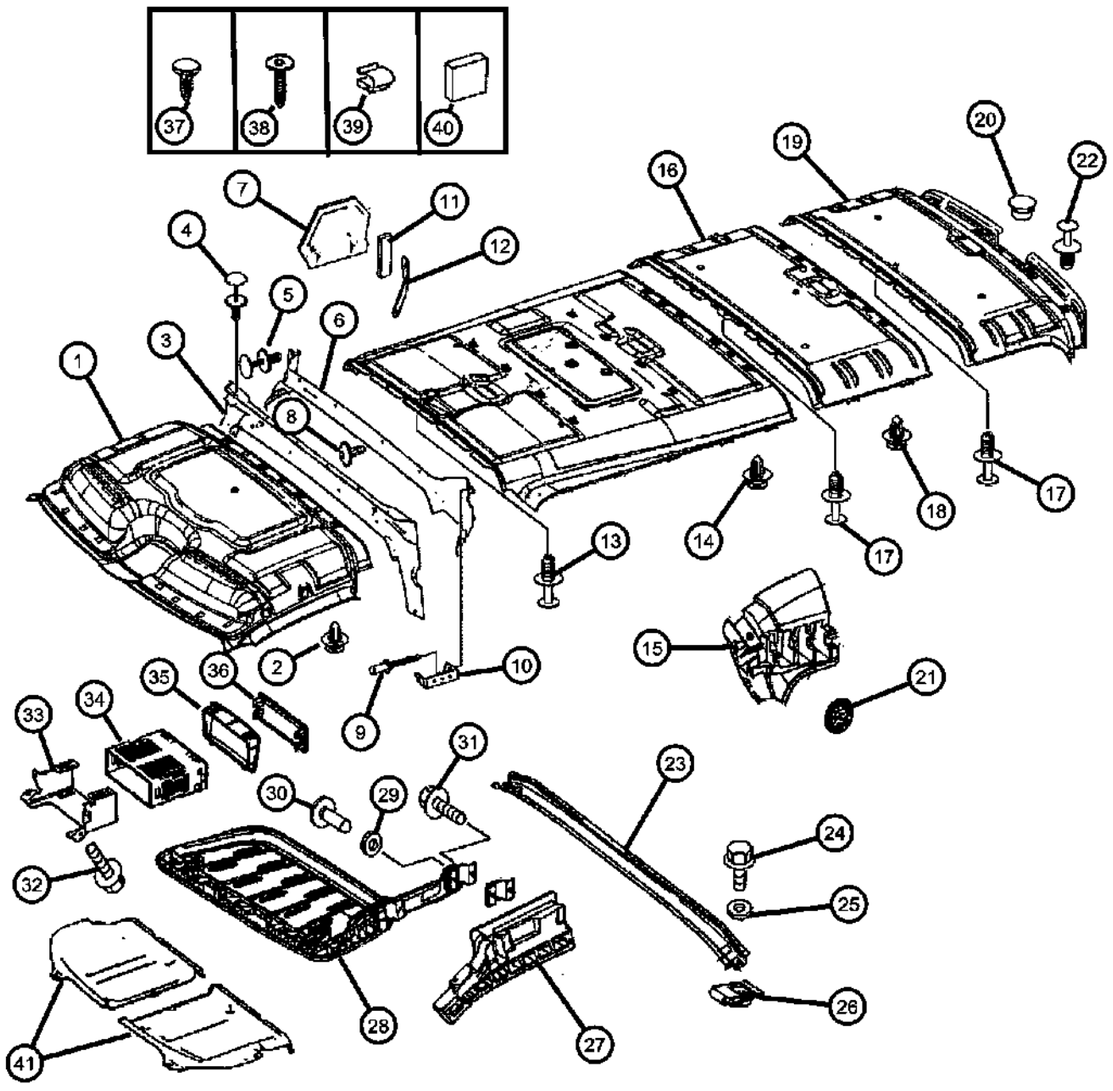

ITEM	PART NUMBER	QTY	LINE	SERIES	BODY	ENGINE	TRANS	TRIM	DESCRIPTION
		8	2, 3, 6, 7	L	13, 15, 17, 53, 55			*E7	
		8	2, 3, 6, 7	L	13, 15, 17, 53, 55			*F7	
14	05125569AA	4	2, 3, 6, 7	L	13, 15, 17, 53, 55				CLIP, Headlining
15									INSULATOR, Anti Rattle
	1JE54NCVAA	1	2, 6	L	13, 15, 17			*F7	Left
		1	2, 6	L	13, 15, 17			*E7	
	1JE55NCVAA	1	2, 6	L	13, 15, 17, 53, 55			*A6	Right
16									HEADLINER
	1HC33XDVAA	2	2, 3, 6, 7	L	13, 53			*A6	
		2	2, 3, 6, 7	L	13, 53			*E7	
		2	2, 3, 6, 7	L	13, 53			*F7	
17									RIVET, Plastic
	1AR96DX9AA	8	2, 3, 6, 7	L	13, 15, 17, 53, 55			*A6	
		8	2, 3, 6, 7	L	13, 15, 17, 53, 55			*E7	
		8	2, 3, 6, 7	L	13, 15, 17, 53, 55			*F7	
18	05125569AA	4	2, 3, 6, 7	L	13, 15, 17, 53, 55				CLIP, Headlining
19	1HC36XDVAA	1	2, 3, 6, 7	L	13, 53			*A6	HEADLINER
20									CAP
	1HC40NC-VAA	4	2, 3, 6, 7	L	13, 15, 17, 53, 55			*A6	
		4	2, 3, 6, 7	L	13, 15, 17, 53, 55			*E7	
		4	2, 3, 6, 7	L	13, 15, 17, 53, 55			*F7	
21	68004747AA	2	2, 3, 6, 7	L	13, 15, 17, 53, 55				WASHER, Spring
22	1HC32NC-VAA	AR	2, 3, 6, 7	L	13, 15, 17, 53, 55				RIVET
23	68014272AA	1	2, 3, 6, 7	L	13, 15, 17				BOW, Roof
24	68010354AA	1	2, 3, 6, 7	L	13, 15, 17, 53, 55				SCREW

SPRINTER (VB)

SERIES	LINE	BODY	ENGINE	TRANSMISSION
L = LOWLINE	3 = HD DODGE 2WD 6 = Lt. Duty DODGE 4WD 2 = Med. Duty DODGE 2WD 7 = Med. Duty DODGE 4WD	17 = VAN WHEEL BASE 7 55 = WAGON WHEEL BASE 5 15 = VAN WHEEL BASE 5 53 = 119 WB 13 = 119 WB 05 = CAB CHASSIS WHEEL BASE 5 03 = CAB CHASSIS WHEEL BASE 3	EG2 = 3.5L V6 Gas Engine EXM = 3.0L V6 Turbo Diesel Engine	DGZ = 5-Speed Auto W5A380 Transmission

AR = use ase required - = Non illustrrated part

<< RETURN TO GROUP INDEX

Headliner - Rail System
Figure 50-145

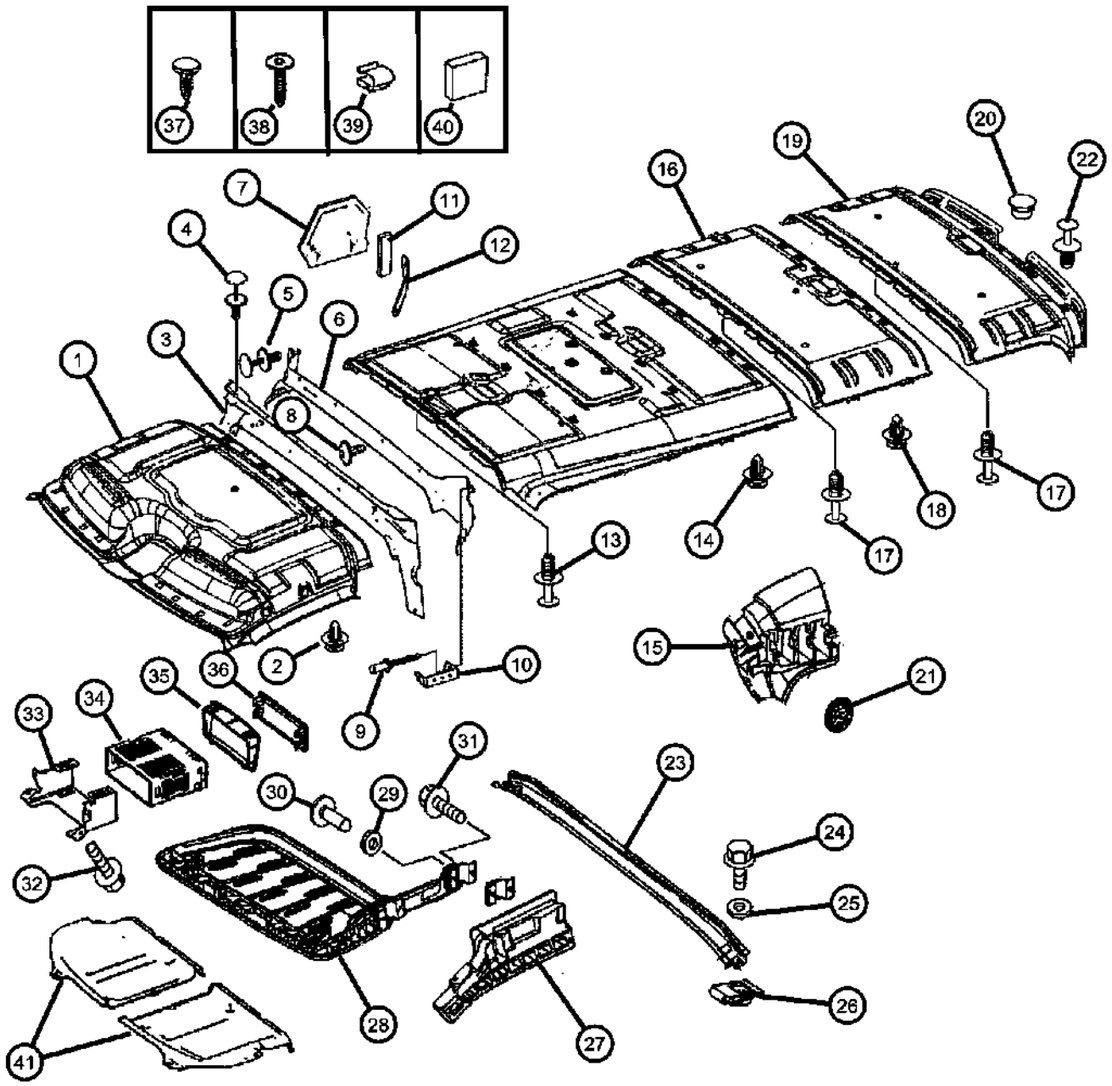

ITEM	PART NUMBER	QTY	LINE	SERIES	BODY	ENGINE	TRANS	TRIM	DESCRIPTION
25	05104639AA	2	2, 3, 6, 7	L	13, 15, 17, 53, 55				WASHER
26	06104736AA	6	2, 3, 6, 7	L					NUT, Clip-On
27									INSULATION
	68014292AA	1	2, 6	L	13, 15, 17, 53, 55				Right
	68014293AA	1	2, 6	L	13, 15, 17, 53, 55				Left
28									TRAY, Cargo
	1HA97XDVAA	1	2, 3, 6, 7	L				*A6	Left
		1	2, 3, 6, 7	L				*E7	Left
		1	2, 3, 6, 7	L				*F7	Left
	1HA98XDVAA	1	2, 3, 6, 7	L				*A6	Right
		1	2, 3, 6, 7	L				*E7	Right
		1	2, 3, 6, 7	L				*F7	Right
29	05133908AA	4	2, 3, 6, 7	L	13, 15, 17, 53, 55				WASHER
30	05161856AB	1	2, 3, 6, 7	L					SCREW
31	68004879AA	8	2, 3, 6, 7	L					SCREW
32	06104120AA	4	2, 3, 6, 7	L	13, 15, 17, 53, 55				SCREW, Hex Head, M6x12
33	68014285AA	1	2, 3, 6, 7	L					BRACKET
34									BRACKET
	1HB93CSTAA	1	2, 3, 6, 7	L	13, 15, 17, 53, 55			*A6	
		1	2, 3, 6, 7	L	13, 15, 17, 53, 55			*E7	
		1	2, 3, 6, 7	L	13, 15, 17, 53, 55			*F7	
35									BEZEL
	1HA99XDVAA	1	2, 3, 6, 7	L				*A6	
		1	2, 3, 6, 7	L				*E7	
		1	2, 3, 6, 7	L				*F7	
36	1HB94CSTAA	1	2, 3, 6, 7	L					COVER
37	05103817AA	2	2, 3, 6, 7	L	13, 15, 17, 53, 55				PLUG

SPRINTER (VB)

SERIES	LINE	BODY	ENGINE	TRANSMISSION
L = LOWLINE	3 = HD DODGE 2WD 6 = Lt. Duty DODGE 4WD 2 = Med. Duty DODGE 2WD 7 = Med. Duty DODGE 4WD	17 = VAN WHEEL BASE 7 55 = WAGON WHEEL BASE 5 15 = VAN WHEEL BASE 5 53 = 119 WB 13 = 119 WB 05 = CAB CHASSIS WHEEL BASE 5 03 = CAB CHASSIS WHEEL BASE 3	EG2 = 3.5L V6 Gas Engine EXM = 3.0L V6 Turbo Diesel Engine	DGZ = 5-Speed Auto W5A380 Transmission

Headliner - Rail System
Figure 50-145

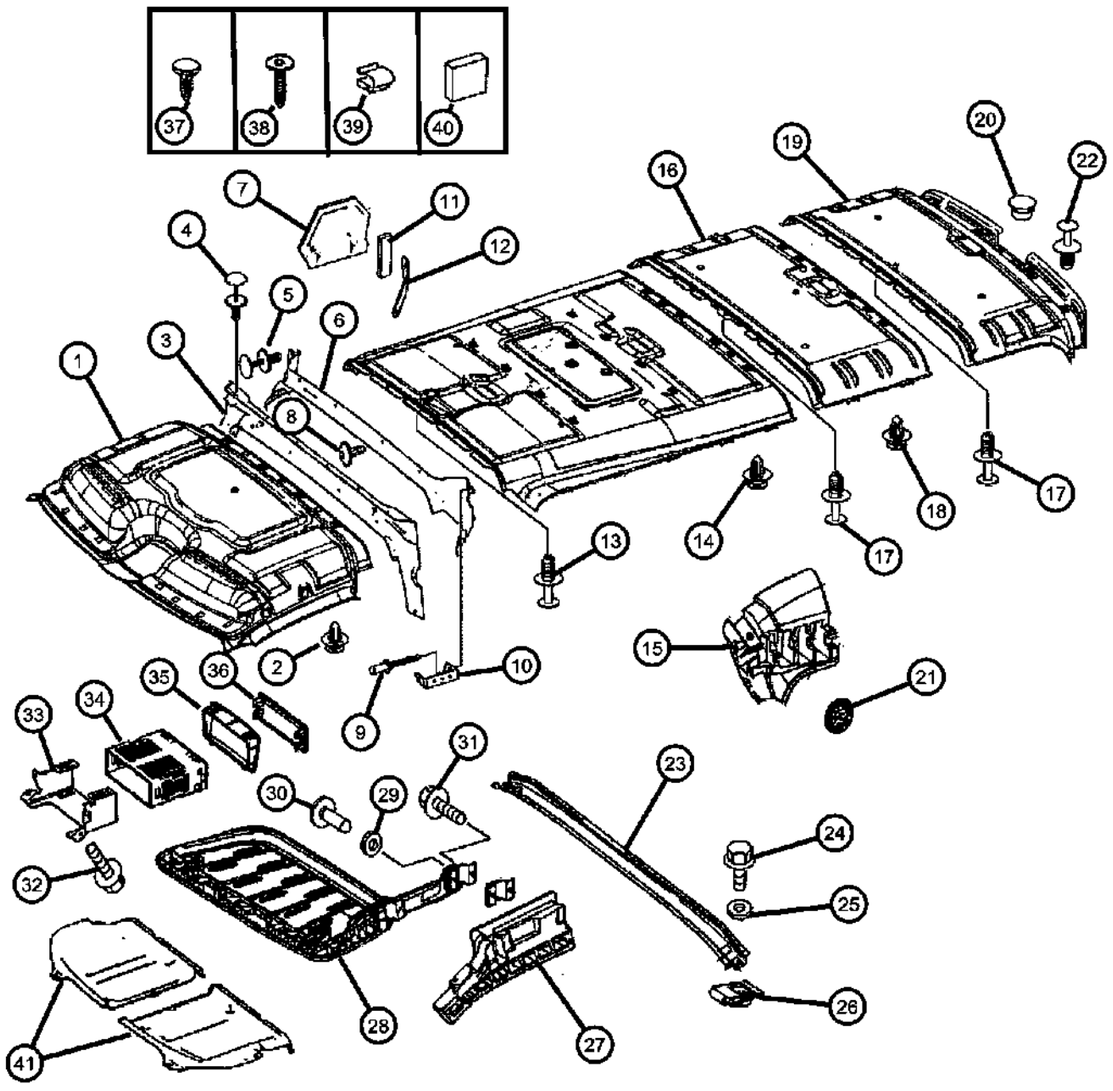

ITEM	PART NUMBER	QTY	LINE	SERIES	BODY	ENGINE	TRANS	TRIM	DESCRIPTION
38	68009926AA	10	2, 3, 6, 7	L	13, 15, 17, 53, 55				SCREW
39	68014280AA	5	2, 3, 6, 7	L	13, 15, 17, 53, 55				CLIP
40	68014291AA	2	2, 3, 6, 7	L	13, 15, 17, 53, 55				INSULATOR
41									BELLY PAN, Front
	1JF80AA7AA	1	2, 3, 6, 7	L	13, 15, 17, 53, 55			*AL	Right
		1	2, 3, 6, 7	L	13, 15, 17, 53, 55			*E7	Right
		1	2, 3, 6, 7	L	13, 15, 17, 53, 55			*F7	Right
	1JF81AA7AA	1	2, 3, 6, 7	L	13, 15, 17, 53, 55			*AL	Left
		1	2, 3, 6, 7	L	13, 15, 17, 53, 55			*E7	Left
		1	2, 3, 6, 7	L	13, 15, 17, 53, 55			*F7	Left

SPRINTER (VB)

SERIES	LINE	BODY	ENGINE	TRANSMISSION
L = LOWLINE	3 = HD DODGE 2WD 6 = Lt. Duty DODGE 4WD 2 = Med. Duty DODGE 2WD 7 = Med. Duty DODGE 4WD	17 = VAN WHEEL BASE 7 55 = WAGON WHEEL BASE 5 15 = VAN WHEEL BASE 5 53 = 119 WB 13 = 119 WB 05 = CAB CHASSIS WHEEL BASE 5 03 = CAB CHASSIS WHEEL BASE 3	EG2 = 3.5L V6 Gas Engine EXM = 3.0L V6 Turbo Diesel Engine	DGZ = 5-Speed Auto W5A380 Transmission

Headliner - Rail System
Figure 50-146

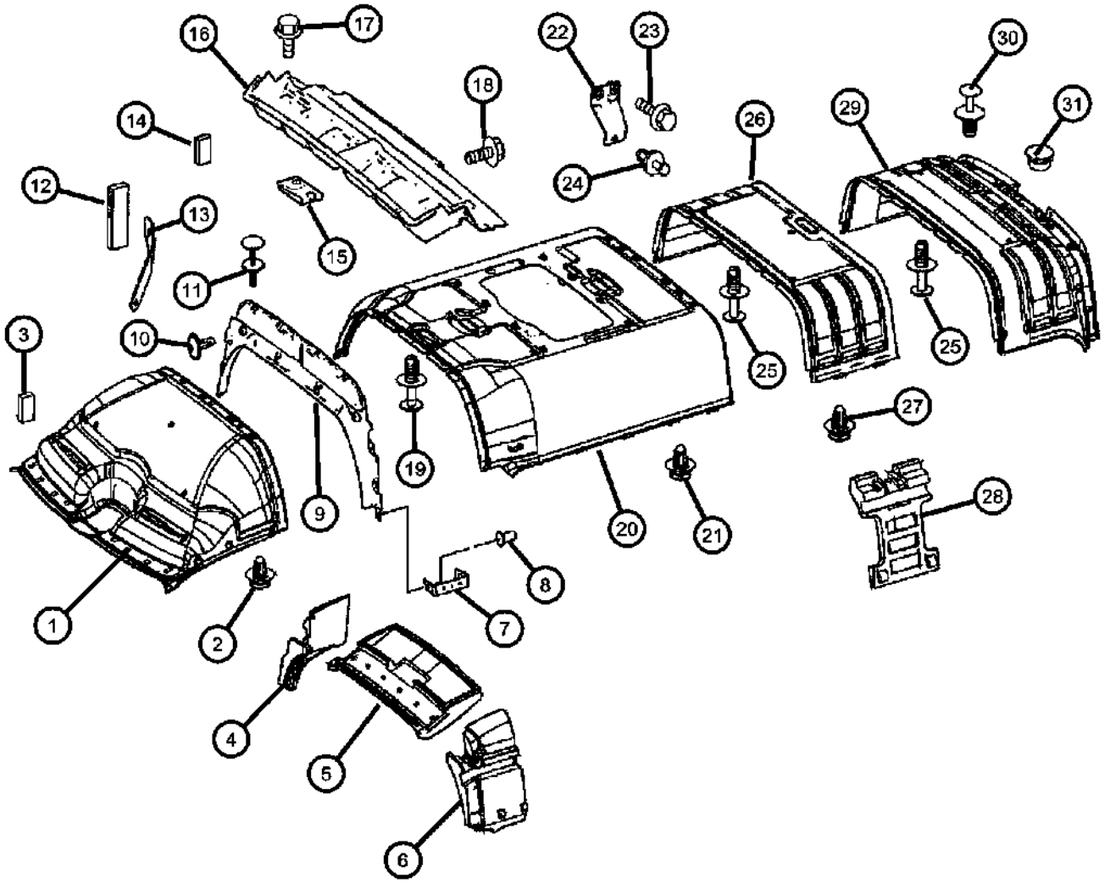

ITEM	PART NUMBER	QTY	LINE	SERIES	BODY	ENGINE	TRANS	TRIM	DESCRIPTION
1									HEADLINER
	1HA89ADVAA	1	2, 3, 6, 7	L				*A6	[A4A6]
		1	2, 3, 6, 7	L				*E7	[A4E7]
		1	2, 3, 6, 7	L				*F7	[A4F7]
	1HA89TDVAA	1	2, 3, 6, 7	L				*A6	[A7A6]
		1	2, 3, 6, 7	L				*E7	[A7E7]
		1	2, 3, 6, 7	L				*F7	[A7F7]
	1HA92ADVAA	1	2, 3, 6, 7	L				*A6	[A4A6] With [CK7]
		1	2, 3, 6, 7	L				*E7	[A4E7] With [CK7]
		1	2, 3, 6, 7	L				*F7	[A4F7] With [CK7]
	1HA92TDVAA	1	2, 3, 6, 7	L				*A6	[A7A6] With [CK7]
		1	2, 3, 6, 7	L				*E7	[A7E7] With [CK7]
		1	2, 3, 6, 7	L				*F7	[A7F7] With [CK7]
	1HA95ADVAA	1	2, 3, 6, 7	L				*A6	[A4A6] With [CJ4+CK7]
		1	2, 3, 6, 7	L				*E7	[A4E7] With [CJ4+CK7]
		1	2, 3, 6, 7	L				*F7	[A4F7] With [CJ4+CK7]
	1HA95TDVAA	1	2, 3, 6, 7	L				*A6	[A7A6] With [CJ4+CK7]
		1	2, 3, 6, 7	L				*E7	[A7E7] With [CJ4+CK7]
		1	2, 3, 6, 7	L				*F7	[A7F7] With [CJ4+CK7]
	1HA96ADVAA	1	2, 3, 6, 7	L				*A6	[A4A6] With [CJ4]
		1	2, 3, 6, 7	L				*E7	[A4E7] With [CJ4]
		1	2, 3, 6, 7	L				*F7	[A4F7] With [CJ4]
	1HA96TDVAA	1	2, 3, 6, 7	L				*A6	[A7A6] With [CJ4]
		1	2, 3, 6, 7	L				*E7	[A7E7] With [CJ4]
		1	2, 3, 6, 7	L				*F7	[A7F7] With [CJ4]
	1HB96KDVAA	1	2, 3, 6, 7	L	13, 15, 17, 53, 55			*A6	[DVA6] With [MWJ%MX2%MX1+CK7]
		1	2, 3, 6, 7	L	13, 15, 17, 53, 55			*E7	[DVE7] With [MWJ%MX2%MX1+CK7]
		1	2, 3, 6, 7	L	13, 15, 17, 53, 55			*F7	[DVF7] With [MWJ%MX2%MX1+CK7]
	1HB97KDVAA	1	2, 3, 6, 7	L	13, 15, 17, 53, 55			*A6	[DVA6] With [MWJ%MX2%MX1+CJ4+CK7]
		1	2, 3, 6, 7	L	13, 15, 17, 53, 55			*E7	[DVE7] With [MWJ%MX2%MX1+CJ4+CK7]

SPRINTER (VB)

SERIES	LINE	BODY	ENGINE	TRANSMISSION
L = LOWLINE	3 = HD DODGE 2WD 6 = Lt. Duty DODGE 4WD 2 = Med. Duty DODGE 2WD 7 = Med. Duty DODGE 4WD	17 = VAN WHEEL BASE 7 55 = WAGON WHEEL BASE 5 15 = VAN WHEEL BASE 5 53 = 119 WB 13 = 119 WB 05 = CAB CHASSIS WHEEL BASE 5 03 = CAB CHASSIS WHEEL BASE 3	EG2 = 3.5L V6 Gas Engine EXM = 3.0L V6 Turbo Diesel Engine	DGZ = 5-Speed Auto W5A380 Transmission

Headliner - Rail System
Figure 50-146

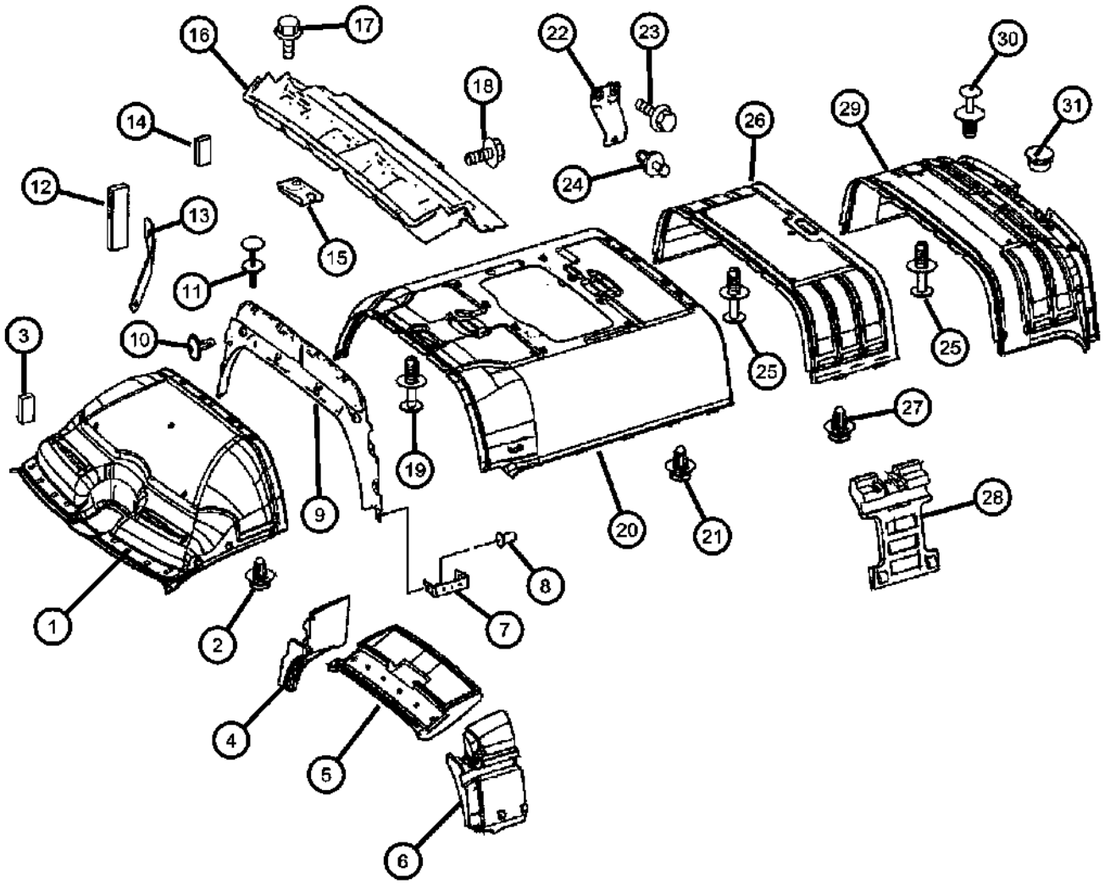

ITEM	PART NUMBER	QTY	LINE	SERIES	BODY	ENGINE	TRANS	TRIM	DESCRIPTION
		1	2, 3, 6, 7	L	13, 15, 17, 53, 55			*F7	[DVF7] With [MWJ%MX2%MX1+CJ4+CK7]
	1HB98KDVAA	1	2, 3, 6, 7	L	13, 15, 17, 53, 55			*A6	[DVA6] With [MWJ%MX2%MX1+CJ4]
		1	2, 3, 6, 7	L	13, 15, 17, 53, 55			*E7	[DVE7] With [MWJ%MX2%MX1+CJ4]
		1	2, 3, 6, 7	L	13, 15, 17, 53, 55			*F7	[DVF7] With [MWJ%MX2%MX1+CJ4]
	1HB98XDVAA	1	2, 3, 6, 7	L	13, 15, 17, 53, 55			*A6	[A4A6] With [MWJ%MX2%MX1+CJ4]
		1	2, 3, 6, 7	L	13, 15, 17, 53, 55			*A6	[A7A6] With [MWJ%MX2%MX1+CJ4]
		1	2, 3, 6, 7	L	13, 15, 17, 53, 55			*E7	[A4E7] With [MWJ%MX2%MX1+CJ4]
		1	2, 3, 6, 7	L	13, 15, 17, 53, 55			*E7	[A7E7] With [MWJ%MX2%MX1+CJ4]
		1	2, 3, 6, 7	L	13, 15, 17, 53, 55			*F7	[A4F7] With [MWJ%MX2%MX1+CJ4]
		1	2, 3, 6, 7	L	13, 15, 17, 53, 55			*F7	[A7F7] With [MWJ%MX2%MX1+CJ4]
	1HB99KDVAA	1	2, 3, 6, 7	L	13, 15, 17, 53, 55				All [DV] Order Codes With [MWJ%MX2%MX1+4XK]
2	05125569AA	4	2, 3, 6, 7	L	13, 15, 17, 53, 55				CLIP, Headlining
3	68010358AA	2	2, 3, 6, 7	L	13, 15, 17, 53, 55				INSULATION
4									INSULATION
	68014302AA	1	2, 6	L	13, 15, 17, 53, 55				Center, Right
	68014303AA	1	2, 3, 6, 7	L	13, 15, 17, 53, 55				With [GK9], Center, Right
	68014317AA	1	2, 3, 6, 7	L	13, 15, 17, 53, 55				Center, Left
	68014320AA	1	2, 3, 6, 7	L	53, 55, 13, 15, 17				Right
5									INSULATION
	68014324AA	1	2, 6	L	13, 15, 17, 53, 55				With [CTA]
	68014325AA	1	2, 6	L	13, 15, 17, 53, 55				
6									INSULATION
	68014297AA	1	2, 6	L	13, 15, 17, 53, 55				Left

SPRINTER (VB)

SERIES	LINE	BODY	ENGINE	TRANSMISSION
L = LOWLINE	3 = HD DODGE 2WD 6 = Lt. Duty DODGE 4WD 2 = Med. Duty DODGE 2WD 7 = Med. Duty DODGE 4WD	17 = VAN WHEEL BASE 7 55 = WAGON WHEEL BASE 5 15 = VAN WHEEL BASE 5 53 = 119 WB 13 = 119 WB 05 = CAB CHASSIS WHEEL BASE 5 03 = CAB CHASSIS WHEEL BASE 3	EG2 = 3.5L V6 Gas Engine EXM = 3.0L V6 Turbo Diesel Engine	DGZ = 5-Speed Auto W5A380 Transmission

Headliner - Rail System
Figure 50-146

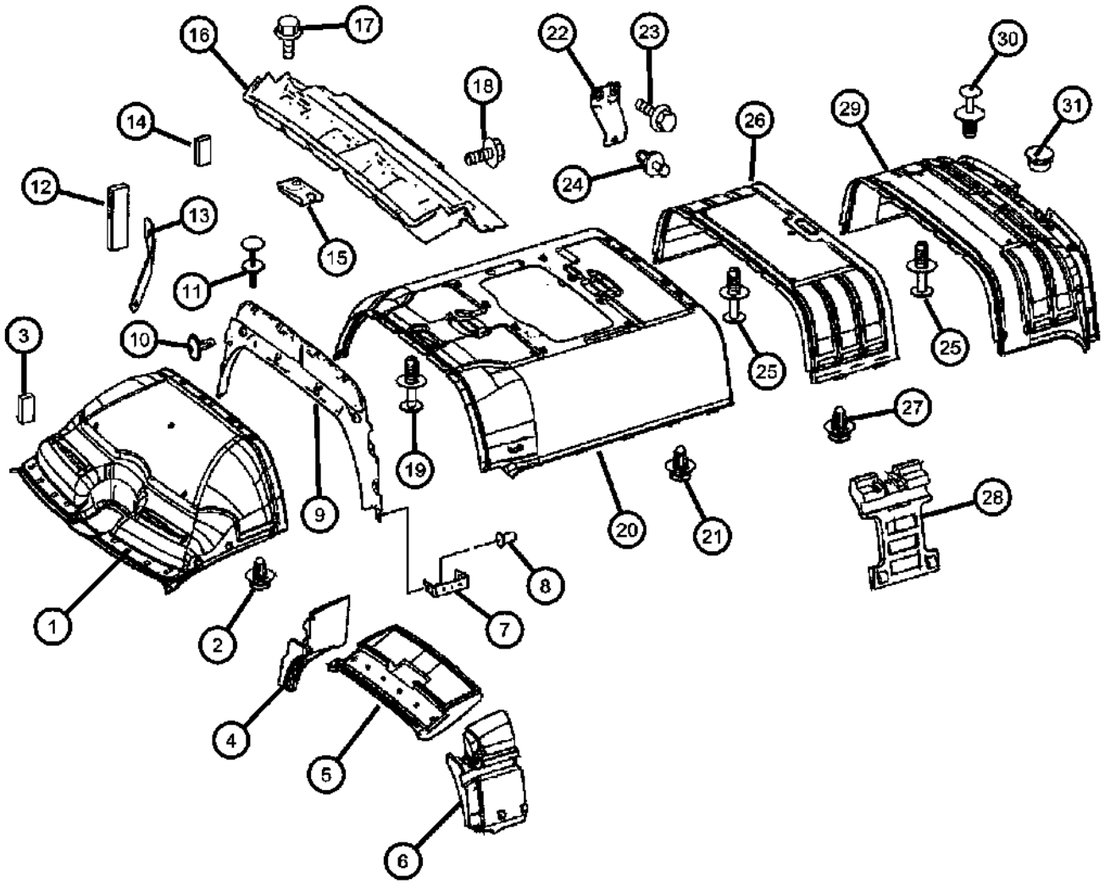

ITEM	PART NUMBER	QTY	LINE	SERIES	BODY	ENGINE	TRANS	TRIM	DESCRIPTION
	68014298AA	1	2, 6	L	15, 17, 53, 55, 13				Right
7	68014184AA	2	2, 3, 6, 7	L					BRACKET
8	05134061AA	8	2, 3, 6, 7	L	13, 15, 17, 53, 55				RIVET
9									PANEL
	1HC05XDVAA	1	2, 3, 6, 7	L	13, 15, 17, 53, 55			*A6	With [MX2] or [MX1] and [[GKA] [GKE]
		1	2, 3, 6, 7	L	13, 15, 17, 53, 55			*E7	With [MX2] or [MX1] and [[GKA] [GKE]
		1	2, 3, 6, 7	L	13, 15, 17, 53, 55			*F7	With [MX2] or [MX1] and [[GKA] [GKE]
	1HC06XDVAA	1	2, 3, 6, 7	L	13, 15, 17, 53, 55			*A6	With [MX2] or [MX1] and [[GKA]
		1	2, 3, 6, 7	L	13, 15, 17, 53, 55			*E7	With [MX2] or [MX1] and [[GKA]
		1	2, 3, 6, 7	L	13, 15, 17, 53, 55			*F7	With [MX2] or [MX1] and [[GKA]
	1HC07XDVAA	1	2, 3, 6, 7	L	13, 15, 17, 53, 55			*A6	With [MX2] or [MX1] and [[GKE]
		1	2, 3, 6, 7	L	13, 15, 17, 53, 55			*E7	With [MX2] or [MX1] and [[GKE]
		1	2, 3, 6, 7	L	13, 15, 17, 53, 55			*F7	With [MX2] or [MX1] and [[GKE]
	1HC08XDVAA	1	2, 3, 6, 7	L	13, 15, 17, 53, 55			*A6	With [MWJ] [GKA] or [GKE]
		1	2, 3, 6, 7	L	13, 15, 17, 53, 55			*E7	With [MWJ] [GKA] or [GKE]
		1	2, 3, 6, 7	L	13, 15, 17, 53, 55			*F7	With [MWJ] [GKA] or [GKE]
	1HC09XDVAA	1	2, 3, 6, 7	L	13, 15, 17, 53, 55			*A6	With [MWJ] [GKA]
		1	2, 3, 6, 7	L	13, 15, 17, 53, 55			*E7	With [MWJ] [GKA]
		1	2, 3, 6, 7	L	13, 15, 17, 53, 55			*F7	With [MWJ] [GKA]
	1HC10XDVAA	1	2, 3, 6, 7	L	13, 15, 17			*A6	With [MWJ] [GKE]
		1	2, 3, 6, 7	L	13, 15, 17			*E7	With [MWJ] [GKE]
		1	2, 3, 6, 7	L	13, 15, 17			*F7	With [MWJ] [GKE]
	1HC12XDVAA	1	2, 3, 6, 7	L	13, 15, 17			*A6	With [MWJ] [GK9]
		1	2, 3, 6, 7	L	13, 15, 17			*E7	With [MWJ] [GK9]

SPRINTER (VB)

SERIES	LINE	BODY	ENGINE	TRANSMISSION
L = LOWLINE	3 = HD DODGE 2WD 6 = Lt. Duty DODGE 4WD 2 = Med. Duty DODGE 2WD 7 = Med. Duty DODGE 4WD	17 = VAN WHEEL BASE 7 55 = WAGON WHEEL BASE 5 15 = VAN WHEEL BASE 5 53 = 119 WB 13 = 119 WB 05 = CAB CHASSIS WHEEL BASE 5 03 = CAB CHASSIS WHEEL BASE 3	EG2 = 3.5L V6 Gas Engine EXM = 3.0L V6 Turbo Diesel Engine	DGZ = 5-Speed Auto W5A380 Transmission

Headliner - Rail System
Figure 50-146

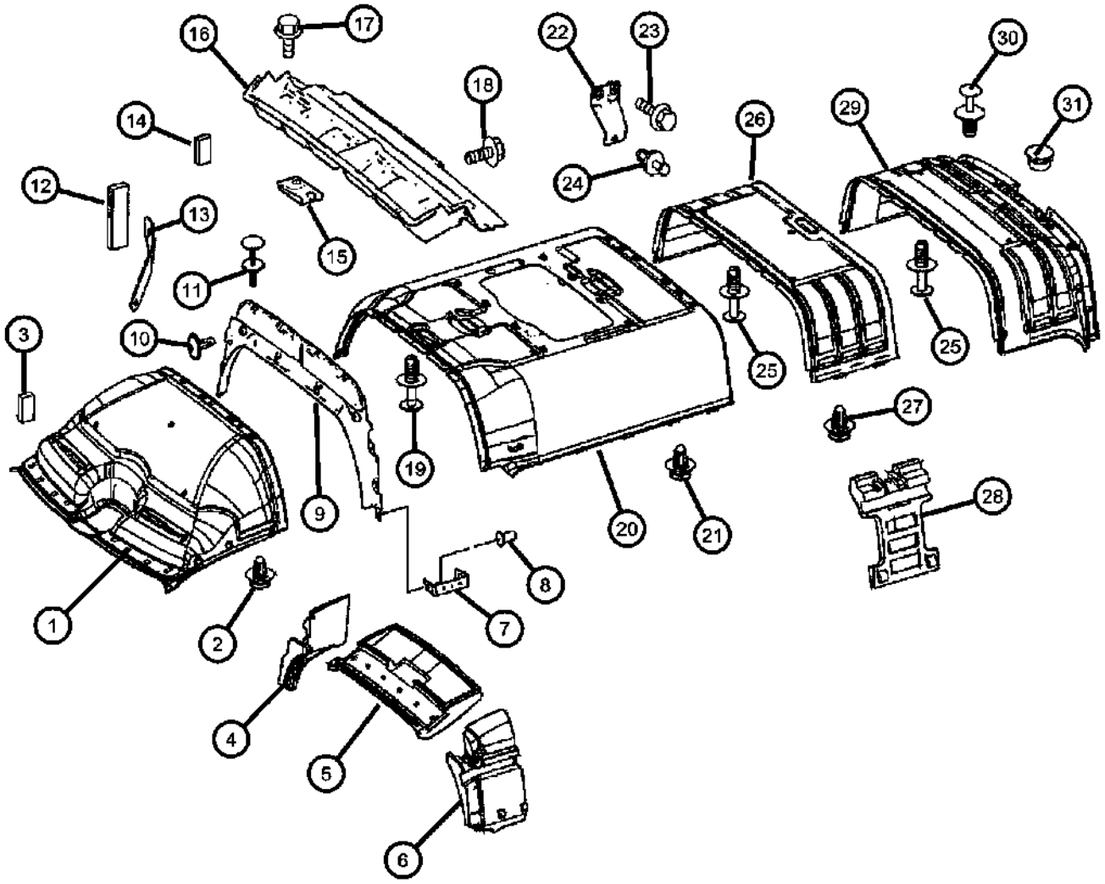

ITEM	PART NUMBER	QTY	LINE	SERIES	BODY	ENGINE	TRANS	TRIM	DESCRIPTION
		1	2, 3, 6, 7	L	13, 15, 17			*F7	With [MWJ] [GK9]
	1HC13XDVAA	1	2, 3, 6, 7	L	13, 15, 17			*A6	With [MX2] or [MX1] and [[GK9]
		1	2, 3, 6, 7	L	13, 15, 17			*E7	With [MX2] or [MX1] and [[GK9]
		1	2, 3, 6, 7	L	13, 15, 17			*F7	With [MX2] or [MX1] and [[GK9]
10	68009926AA	5	2, 3, 6, 7	L	13, 15, 17				SCREW
11									RIVET
	1HC04NC-VAA	2	2, 3, 6, 7	L				*A6	
		2	2, 3, 6, 7	L				*E7	
		2	2, 3, 6, 7	L				*F7	
12	68014185AA	1	2, 3, 6, 7	L	17, 53, 55, 13, 15				SPACER
13	68014186AA	1	2, 3, 6, 7	L	13, 15, 17, 53, 55				BRACKET
14	68010773AA	1	2, 3, 6, 7	L	13, 15, 17, 53, 55				INSULATION
15	06104737AA	4	2, 3, 6, 7	L	13, 15, 17, 53, 55				CLIP, CLIP-SPRING
16									PANEL, Roof
	1HC43NC-VAA	1	2, 3, 6, 7	L	13, 15, 17, 53, 55			*AL	
		1	2, 3, 6, 7	L	13, 15, 17, 53, 55			*E7	
		1	2, 3, 6, 7	L	13, 15, 17, 53, 55			*F7	
17	68009926AA	10	2, 3, 6, 7	L	13, 15, 17, 53, 55				SCREW
18	06104505AA	2	2, 3, 6, 7	L	13, 15, 17, 53, 55				SCREW
19									RIVET, Plastic
	1AR96DX9AA	8	2, 3, 6, 7	L	13, 15, 17, 53, 55			*A6	
		8	2, 3, 6, 7	L	13, 15, 17, 53, 55			*E7	
		8	2, 3, 6, 7	L	13, 15, 17, 53, 55			*F7	
20		8							HEADLINER, Center, (NOT SERVICED)
21	05125569AA	4	2, 3, 6, 7	L	13, 15, 17, 53, 55				CLIP, Headlining

SPRINTER (VB)

SERIES	LINE	BODY	ENGINE	TRANSMISSION
L = LOWLINE	3 = HD DODGE 2WD 6 = Lt. Duty DODGE 4WD 2 = Med. Duty DODGE 2WD 7 = Med. Duty DODGE 4WD	17 = VAN WHEEL BASE 7 55 = WAGON WHEEL BASE 5 15 = VAN WHEEL BASE 5 53 = 119 WB 13 = 119 WB 05 = CAB CHASSIS WHEEL BASE 5 03 = CAB CHASSIS WHEEL BASE 3	EG2 = 3.5L V6 Gas Engine EXM = 3.0L V6 Turbo Diesel Engine	DGZ = 5-Speed Auto W5A380 Transmission

Headliner - Rail System
Figure 50-146

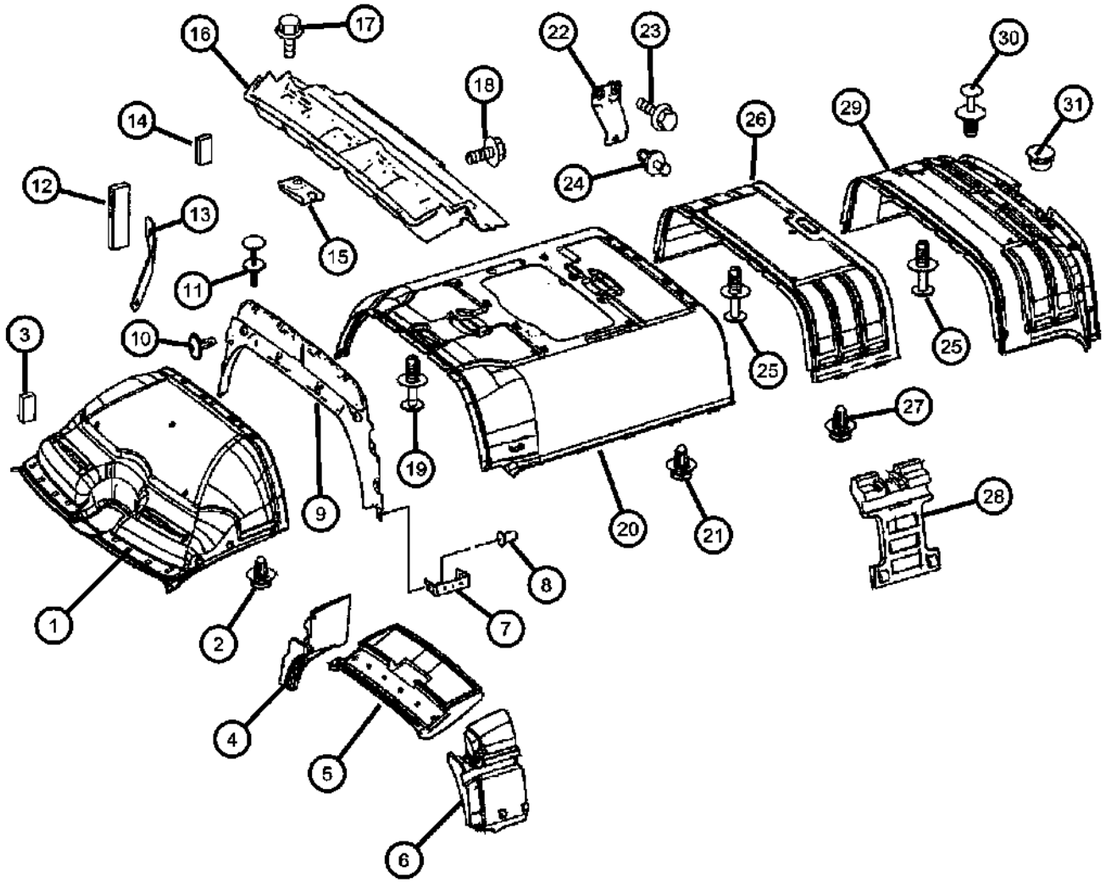

ITEM	PART NUMBER	QTY	LINE	SERIES	BODY	ENGINE	TRANS	TRIM	DESCRIPTION
22	68014234AA	2	2, 3, 6, 7	L	13, 15, 17, 53, 55				BRACKET
23	06104513AA	4	2, 3, 6, 7	L	13, 15, 17, 53, 55				SCREW
24									RIVET
	1HC04NC-VAA	2	2, 3, 6, 7	L				*A6	
		2	2, 3, 6, 7	L				*E7	
		2	2, 3, 6, 7	L				*F7	
25									RIVET, Plastic
	1AR96DX9AA	8	2, 3, 6, 7	L	13, 15, 17, 53, 55			*A6	
		8	2, 3, 6, 7	L	13, 15, 17, 53, 55			*E7	
		8	2, 3, 6, 7	L	13, 15, 17, 53, 55			*F7	
26									HEADLINER
	1HC34TDVAA	1	2, 3, 6, 7	L	15, 55			*A6	[A7A6]
		1	2, 3, 6, 7	L	15, 55			*E7	[A7E7]
		1	2, 3, 6, 7	L	55, 15			*F7	[A7F7]
27	05125569AA	4	2, 3, 6, 7	L	13, 15, 17, 53, 55				CLIP, Headlining
28	68014294AA	1	2, 6	L	13, 15, 17, 53, 55				INSULATION
29									HEADLINER
	1HC37KDVAA	1	2, 3, 6, 7	L	13, 53			*A6	
		1	2, 3, 6, 7	L	13, 53			*E7	
		1	2, 3, 6, 7	L	13, 53			*F7	
30	1HC32NC-VAA	AR	2, 3, 6, 7	L	13, 15, 17, 53, 55				RIVET
31									CAP
	1HC40NC-VAA	4	2, 3, 6, 7	L	13, 15, 17, 53, 55			*A6	
		4	2, 3, 6, 7	L	13, 15, 17, 53, 55			*E7	
		4	2, 3, 6, 7	L	13, 15, 17, 53, 55			*F7	

SPRINTER (VB)

SERIES	LINE	BODY	ENGINE	TRANSMISSION
L = LOWLINE	3 = HD DODGE 2WD 6 = Lt. Duty DODGE 4WD 2 = Med. Duty DODGE 2WD 7 = Med. Duty DODGE 4WD	17 = VAN WHEEL BASE 7 55 = WAGON WHEEL BASE 5 15 = VAN WHEEL BASE 5 53 = 119 WB 13 = 119 WB 05 = CAB CHASSIS WHEEL BASE 5 03 = CAB CHASSIS WHEEL BASE 3	EG2 = 3.5L V6 Gas Engine EXM = 3.0L V6 Turbo Diesel Engine	DGZ = 5-Speed Auto W5A380 Transmission

Interior Moldings And Pillars
Figure 50-202

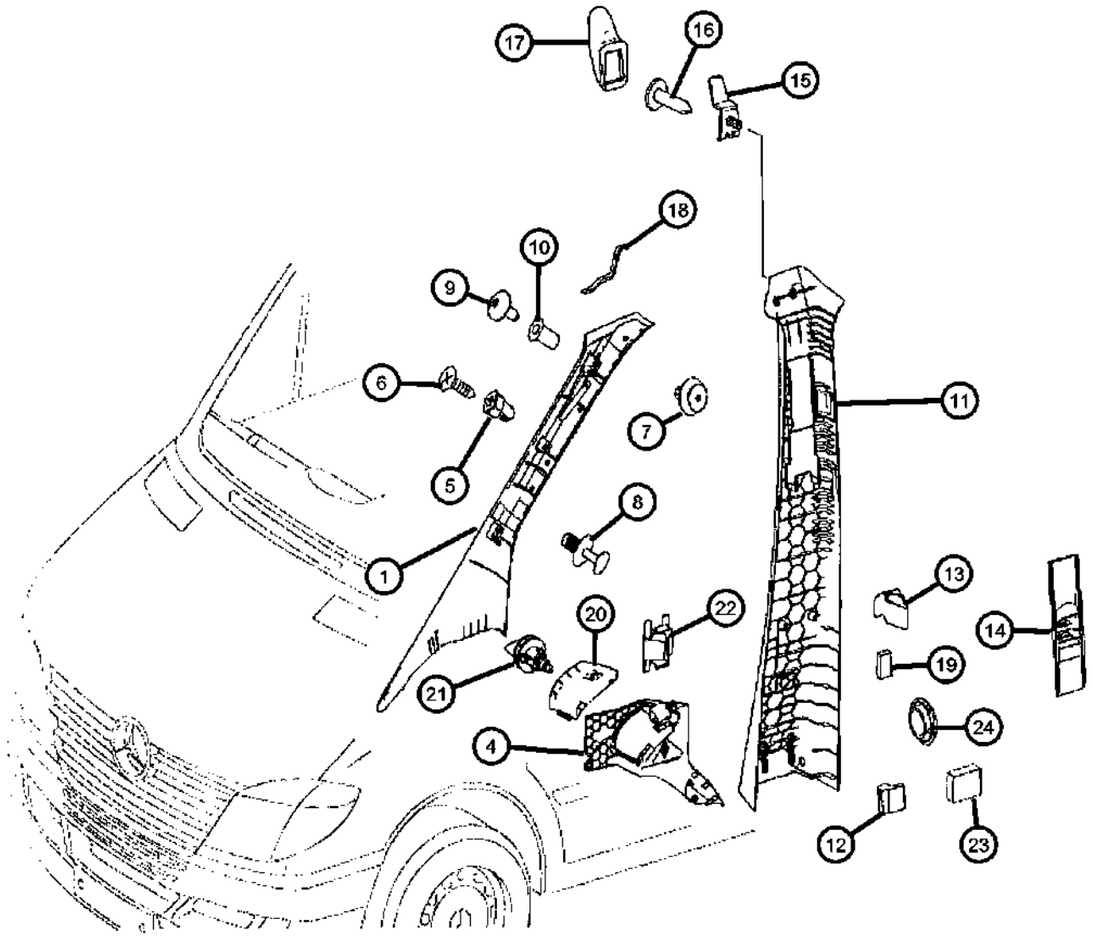

ITEM	PART NUMBER	QTY	LINE	SERIES	BODY	ENGINE	TRANS	TRIM	DESCRIPTION
1	1JZ46NCVAA	1	2, 3, 6, 7	L					PANEL, A Pillar, Without [CJ4], Left
-2	1MS97NC-VAA	1	3, 7	L	03, 05, 13, 15, 17				PANEL, A Pillar Trim, Without [CJ4], Right
-3									MOLDING, A-PILLAR
	1HB04XDVAA	1	2, 3, 6, 7	L					With [CJ4], Right
	1HB05XDVAA	1	2, 3, 6, 7	L					With [CJ4], Left
4									PANEL
	1HA87XDVAA	1	6, 7, 2, 3	L				*E7	Right
		1	2, 3, 6, 7	L				*F7	Right
	1HA85XDVAA	1	2, 3, 6, 7	L				*A6	Left
		1	2, 3, 6, 7	L				*E7	Left
		1	2, 3, 6, 7	L				*F7	Left
		1	2, 3, 6, 7	L				*A6	Right
5	05098837AB	4	2, 3, 6, 7	L					NUT, Plastic Snap-in
6	06104574AA	1	2, 3, 6, 7	L					SCREW, Tapping, [4.8 x 16 MM], Right & Left
7	68006504AA	3	2, 3, 6, 7	L					RETAINERUpper
8									RIVET, Plastic
	1AR96DX9AA	3	3, 7	L	03, 05			*A6	Lower
		3	3, 7	L	03, 05			*E7	Lower
		3	3, 7	L	03, 05			*F7	Lower
9	68014337AA	8	2, 3, 6, 7	L					SCREW, [M6x16], Upper
10	05133486AA	4	2, 3, 6, 7	L					RIVET
11	1HB07NCVAA	1	3, 7	L	03, 05				PANEL, B PillarRight
12	68030968AA	1	2, 3, 6, 7	L	03, 05, 13, 15, 17				INSULATOR
13	68014360AA	4	2, 3, 6, 7	L					CLAMP
14									PANEL, B Pillar
	68014362AA	1	7, 2, 3, 6	L					Right
	68014363AA	1	2, 3, 6, 7	L					Left
15	05124273AA	1	3, 7	L	03, 05				HOOK, Coat
16	06104575AA	1	3, 7	L	03, 05				SCREW, Tapping, M4.8X1.6X19.0
17	0ZF49CS8AA	1	2, 3, 6, 7	L					HOOK, Coat
18	68012811AA	2	2, 3, 6, 7	L					SEAL

SPRINTER (VB)

SERIES	LINE	BODY	ENGINE	TRANSMISSION
L = LOWLINE	3 = HD DODGE 2WD 6 = Lt. Duty DODGE 4WD 2 = Med. Duty DODGE 2WD 7 = Med. Duty DODGE 4WD	17 = VAN WHEEL BASE 7 55 = WAGON WHEEL BASE 5 15 = VAN WHEEL BASE 5 53 = 119 WB 13 = 119 WB 05 = CAB CHASSIS WHEEL BASE 5 03 = CAB CHASSIS WHEEL BASE 3	EG2 = 3.5L V6 Gas Engine EXM = 3.0L V6 Turbo Diesel Engine	DGZ = 5-Speed Auto W5A380 Transmission

Interior Moldings And Pillars
Figure 50-202

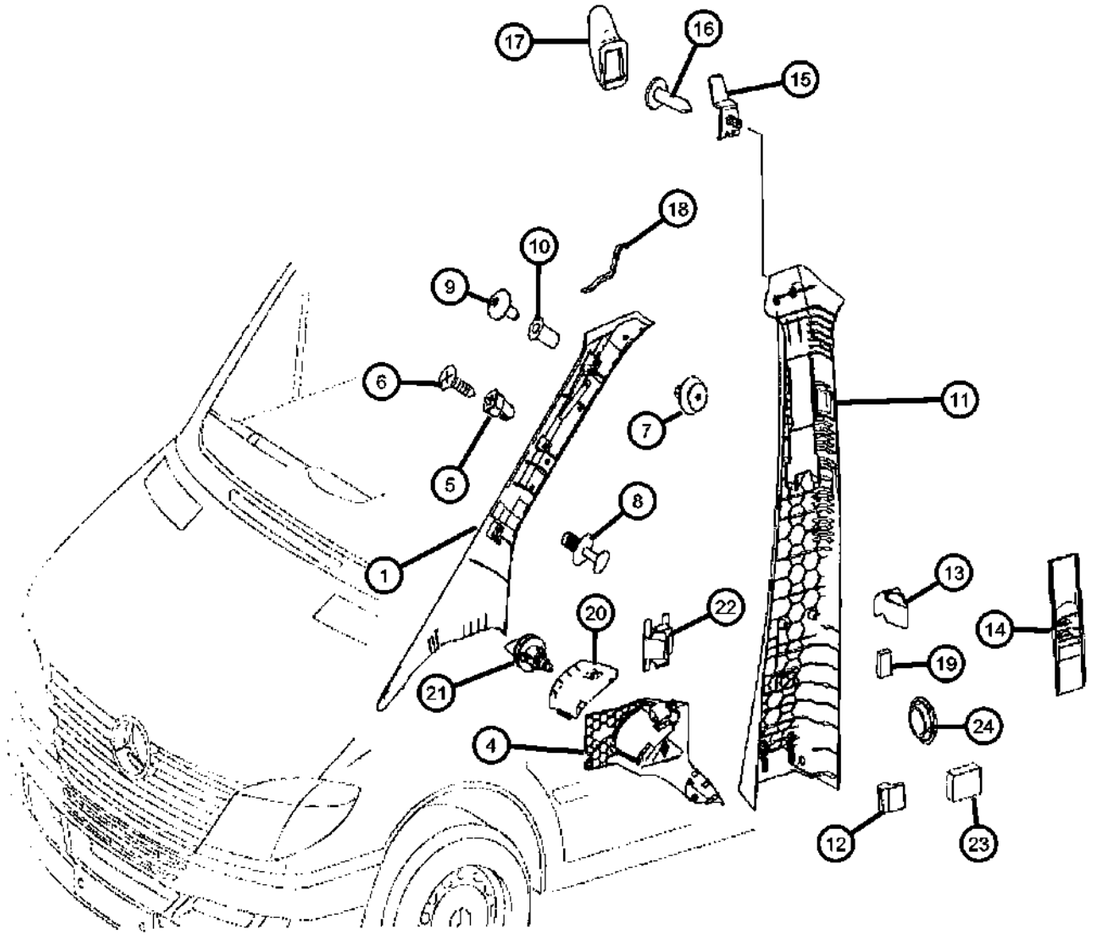

ITEM	PART NUMBER	QTY	LINE	SERIES	BODY	ENGINE	TRANS	TRIM	DESCRIPTION
19	68010773AA	3	3, 7	L	03, 05				INSULATION
20	1HA86NCVAA	1	2, 3, 6, 7	L					COVER
21	68014164AA	1	2, 3, 6, 7	L					RETAINER
22	68014165AA	1	2, 3, 6, 7	L					RETAINER
23	68014291AA	1	3, 7	L	03, 05				INSULATOR
24	68006359AA	2	3, 7	L	03, 05				PLUG, Body

SPRINTER (VB)

SERIES	LINE	BODY	ENGINE	TRANSMISSION
L = LOWLINE	3 = HD DODGE 2WD 6 = Lt. Duty DODGE 4WD 2 = Med. Duty DODGE 2WD 7 = Med. Duty DODGE 4WD	17 = VAN WHEEL BASE 7 55 = WAGON WHEEL BASE 5 15 = VAN WHEEL BASE 5 53 = 119 WB 13 = 119 WB 05 = CAB CHASSIS WHEEL BASE 5 03 = CAB CHASSIS WHEEL BASE 3	EG2 = 3.5L V6 Gas Engine EXM = 3.0L V6 Turbo Diesel Engine	DGZ = 5-Speed Auto W5A380 Transmission

Rear Wall Panel
Figure 50-205

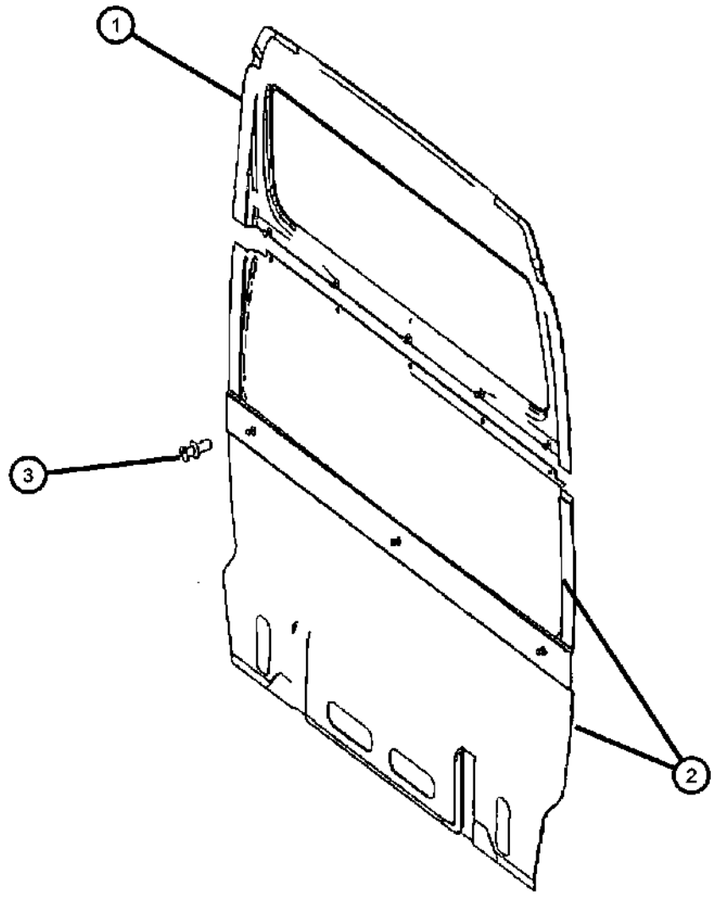

ITEM	PART NUMBER	QTY	LINE	SERIES	BODY	ENGINE	TRANS	TRIM	DESCRIPTION
NOTE:REAR PANEL DOES NOT HAVE OPENING FOR REAR GLASS. IF VEHICLE HAS REAR GLASS, DEALER MUST CUT OUT OR MODIF									
1	1HB09ADVAA	1	3, 7	L	03, 05				PANEL, Cab Back, SEE NOTE
2	1HB10NCVAA	1	2, 3, 6, 7	L	03, 05, 13, 15, 17				PANEL, Cab Back
3	05174538AB	8	2, 3, 6, 7	L					RIVET

SPRINTER (VB)

SERIES	LINE	BODY	ENGINE	TRANSMISSION
L = LOWLINE	3 = HD DODGE 2WD 6 = Lt. Duty DODGE 4WD 2 = Med. Duty DODGE 2WD 7 = Med. Duty DODGE 4WD	17 = VAN WHEEL BASE 7 55 = WAGON WHEEL BASE 5 15 = VAN WHEEL BASE 5 53 = 119 WB 13 = 119 WB 05 = CAB CHASSIS WHEEL BASE 5 03 = CAB CHASSIS WHEEL BASE 3	EG2 = 3.5L V6 Gas Engine EXM = 3.0L V6 Turbo Diesel Engine	DGZ = 5-Speed Auto W5A380 Transmission

Interior Moldings and Pillars
Figure 50-210

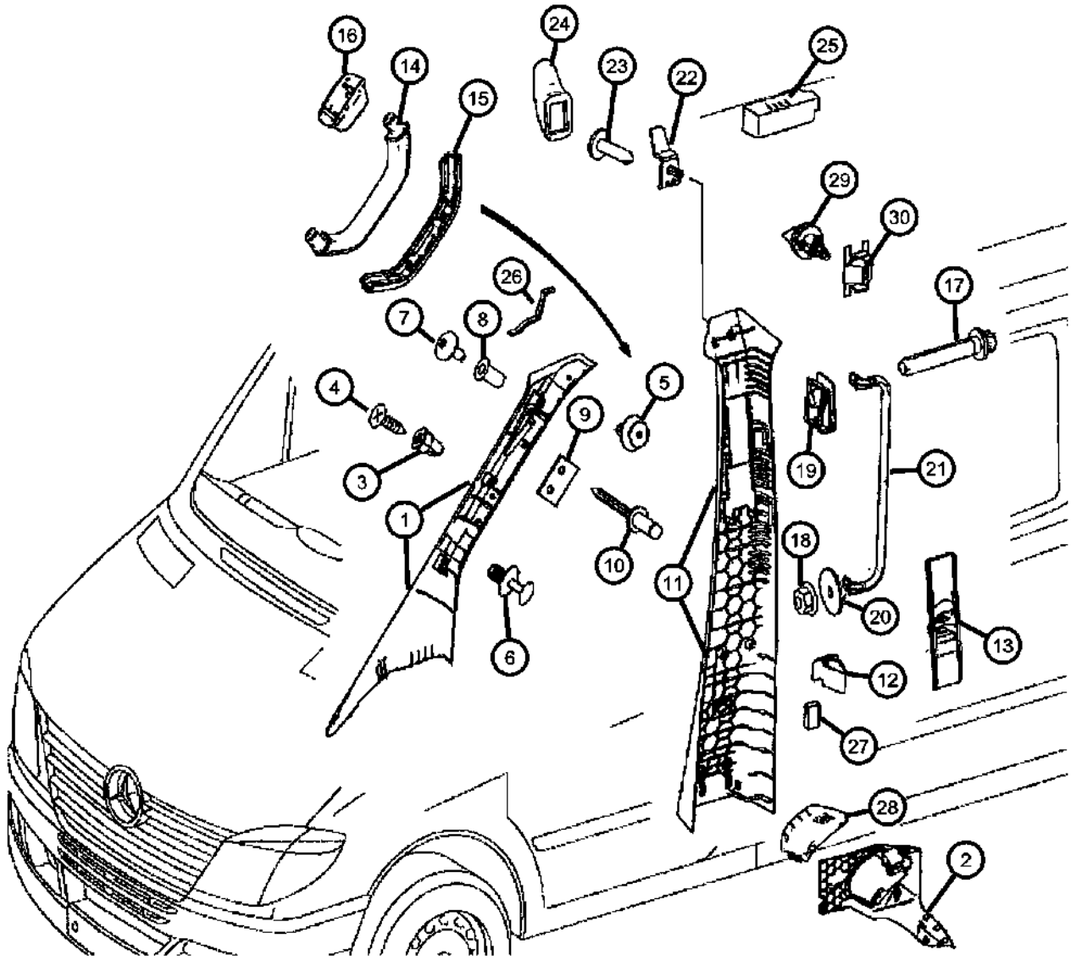

ITEM	PART NUMBER	QTY	LINE	SERIES	BODY	ENGINE	TRANS	TRIM	DESCRIPTION
1	1HB03NCVAA	1	2, 3, 6, 7	L					PANEL, A Pillar Trim, A-Pillar Upper
2									PANEL, A-Pillar Lower
	1HA85XDVAA	1	2, 3, 6, 7	L				*A6	[A6], Left
		1	2, 3, 6, 7	L				*E7	[E7], Left
		1	2, 3, 6, 7	L				*F7	[F7], Left
	1HA87XDVAA	1	2, 3, 6, 7	L				*A6	[A6], Right
		1	2, 3, 6, 7	L				*E7	[E7], Right
		1	2, 3, 6, 7	L				*F7	[F7], Right
3	05098837AB	4	2, 3, 6, 7	L					NUT, Plastic Snap-in
4									SCREW, Tapping
	06104574AA	2	3, 7	L	03, 05				Right & Left
		2	2, 3, 6, 7	L	13, 15, 17, 53, 55				Right & Left
5	68006504AA	3	2, 3, 6, 7	L					RETAINER
6									RIVET, Plastic
	1AR96DX9AA	3	2, 3, 6, 7	L	13, 15, 17, 53, 55			*A6	[A6], Right & Left
		3	2, 3, 6, 7	L	13, 15, 17, 53, 55			*E7	[E7], Right & Left
		3	2, 3, 6, 7	L	13, 15, 17, 53, 55			*F7	[F7], Right & Left
7	68014337AA	8	2, 3, 6, 7	L					SCREW
8	05133486AA	2	2, 3, 6, 7	L	13, 15, 17, 53, 55				RIVET
9	68014338AA	4	2, 3, 6, 7	L					BRACKET, A-Pillar
10	68014338AA	4							RIVET, (NOT SERVICED)
11									PANEL, B Pillar
	1HC44XDVAA	1	2, 3, 6, 7	L	13, 15, 17, 53, 55			*A6	[A6] With [GKE] Left Sliding Door, No Glass, Left
		1	2, 3, 6, 7	L	13, 15, 17, 53, 55			*E7	[E7] With [GKE] Left Sliding Door, No Glass, Left
		1	2, 3, 6, 7	L	13, 15, 17, 53, 55			*F7	[F7] With [GKE] Left Sliding Door, No Glass, Left
	1HC47XDVAA	1	2, 3, 6, 7	L	13, 15, 17, 53, 55			*A6	[A6] With [GKE] Left Sliding Door No Glass,With [CS1] Sloding Door Assist Handle, Left

SPRINTER (VB)

SERIES	LINE	BODY	ENGINE	TRANSMISSION
L = LOWLINE	3 = HD DODGE 2WD 6 = Lt. Duty DODGE 4WD 2 = Med. Duty DODGE 2WD 7 = Med. Duty DODGE 4WD	17 = VAN WHEEL BASE 7 55 = WAGON WHEEL BASE 5 15 = VAN WHEEL BASE 5 53 = 119 WB 13 = 119 WB 05 = CAB CHASSIS WHEEL BASE 5 03 = CAB CHASSIS WHEEL BASE 3	EG2 = 3.5L V6 Gas Engine EXM = 3.0L V6 Turbo Diesel Engine	DGZ = 5-Speed Auto W5A380 Transmission

Interior Moldings and Pillars
Figure 50-210

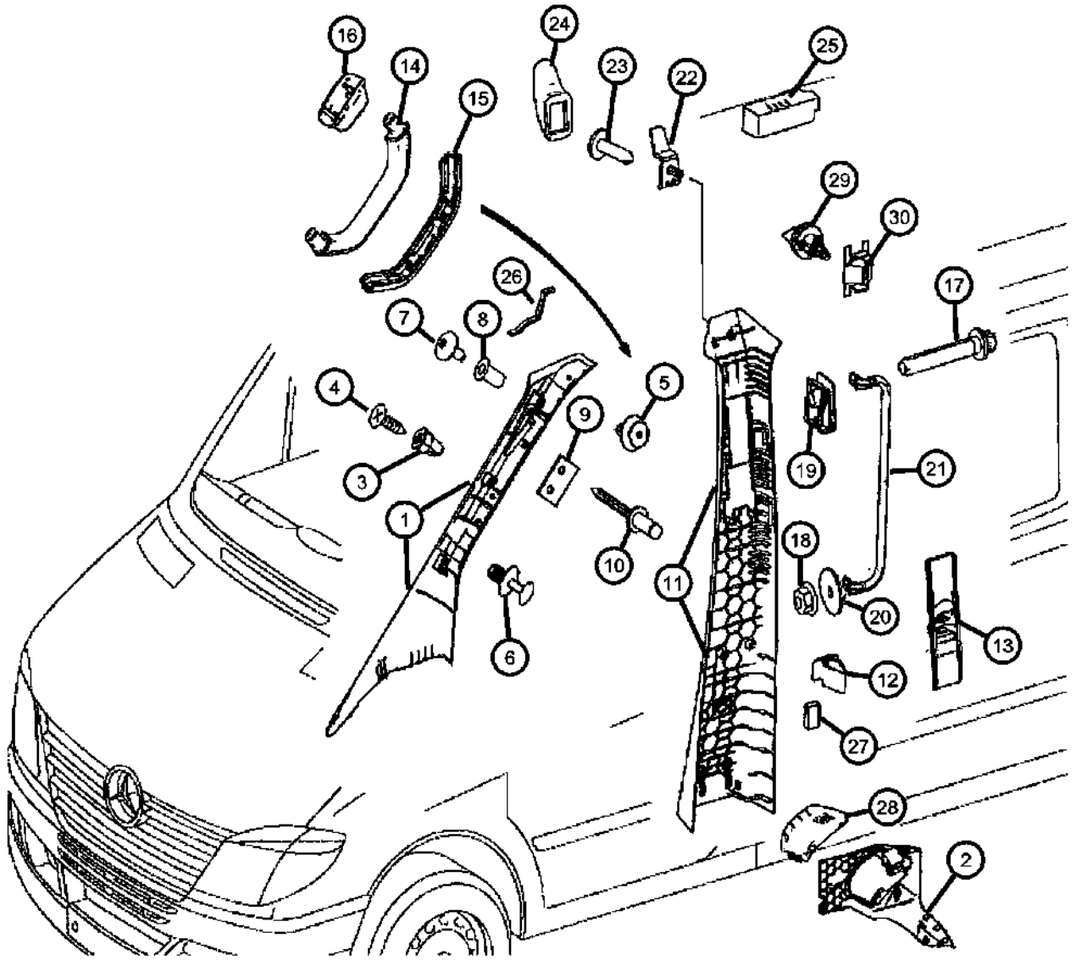

ITEM	PART NUMBER	QTY	LINE	SERIES	BODY	ENGINE	TRANS	TRIM	DESCRIPTION
		1	2, 3, 6, 7	L	13, 15, 17, 53, 55			*E7	[E7] With [GKE] Left Sliding Door No Glass,With [CS1] Sloding Door Assist Handle, Left
		1	2, 3, 6, 7	L	13, 15, 17, 53, 55			*F7	[F7] With [GKE] Left Sliding Door No Glass,With [CS1] Sloding Door Assist Handle, Left
	1HC48NC-VAA	1	2, 3, 6, 7	L	13, 15, 17, 53, 55			*A6	[A6] With [4XK] Paneling Under Roof, Left
		1	2, 3, 6, 7	L	13, 15, 17, 53, 55			*E7	[E7] With [4XK] Paneling Under Roof, Left
		1	2, 3, 6, 7	L	13, 15, 17, 53, 55			*F7	[F7] With [4XK] Paneling Under Roof, Left
		1	2, 6	L	13, 15, 17, 53, 55			*A6	[A6] With [4Z1 or 4XS] National Version for Canada or USA, Left
		1	2, 6	L	13, 15, 17, 53, 55			*E7	[E7] With [4Z1 or 4XS] National Version for Canada or USA, Left
		1	2, 6	L	13, 15, 17, 53, 55			*F7	[F7] With [4Z1 or 4XS] National Version for Canada or USA, Left
	1HC66XDVAA	1	2, 3, 6, 7	L	13, 15, 17, 53, 55			*A6	[A6] With [GKA] Right Sliding Door and [CS1] Sliding Door Assist Handle, Right
		1	2, 3, 6, 7	L	13, 15, 17, 53, 55			*E7	[E7] With [GKA] Right Sliding Door and [CS1] Sliding Door Assist Handle, Right
		1	2, 3, 6, 7	L	13, 15, 17, 53, 55			*F7	[F7] With [GKA] Right Sliding Door and [CS1] Sliding Door Assist Handle, Right
12	68014360AA	4	2, 3, 6, 7	L					CLAMP
13	68014363AA	1	2, 3, 6, 7	L					PANEL, B Pillar
14	1HC58XDVAA	1	2, 3, 6, 7	L	13, 15, 17, 53, 55				HANDLE, Grab, [GKA%GKE+CS1]
15									COVER, Handle
	1HC59XDVAA	1	2, 3, 6, 7	L	13, 15, 17, 53, 55			*A6	[A6] With [CS1] Sliding Door Assist Handle,With [GKE] Left Sliding Door
		1	2, 3, 6, 7	L	13, 15, 17, 53, 55			*E7	[E7] With [CS1] Sliding Door Assist Handle,With [GKE] Left Sliding Door
		1	2, 3, 6, 7	L	13, 15, 17, 53, 55			*F7	[F7] With [CS1] Sliding Door Assist Handle,With [GKE] Left Sliding Door

SPRINTER (VB)

SERIES	LINE	BODY	ENGINE	TRANSMISSION
L = LOWLINE	3 = HD DODGE 2WD 6 = Lt. Duty DODGE 4WD 2 = Med. Duty DODGE 2WD 7 = Med. Duty DODGE 4WD	17 = VAN WHEEL BASE 7 55 = WAGON WHEEL BASE 5 15 = VAN WHEEL BASE 5 53 = 119 WB 13 = 119 WB 05 = CAB CHASSIS WHEEL BASE 5 03 = CAB CHASSIS WHEEL BASE 3	EG2 = 3.5L V6 Gas Engine EXM = 3.0L V6 Turbo Diesel Engine	DGZ = 5-Speed Auto W5A380 Transmission

Interior Moldings and Pillars
Figure 50-210

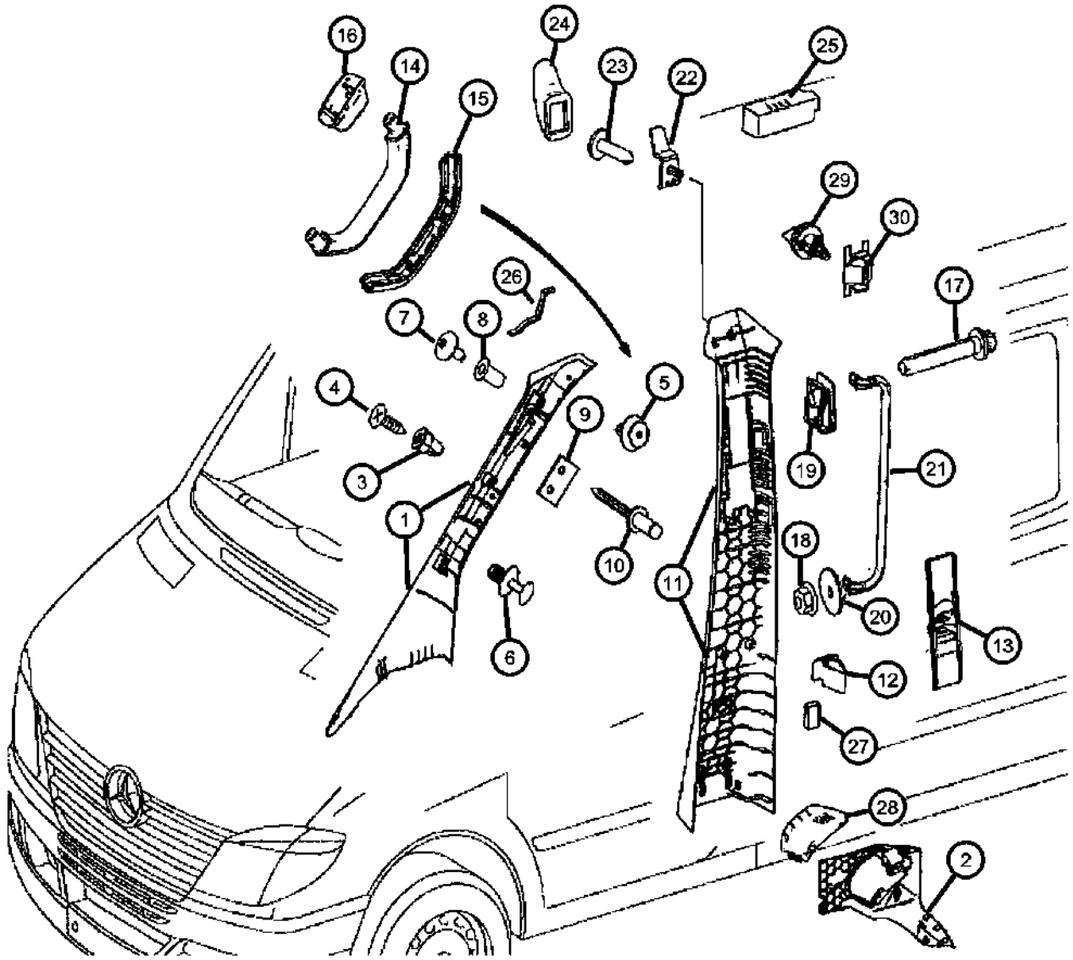

ITEM	PART NUMBER	QTY	LINE	SERIES	BODY	ENGINE	TRANS	TRIM	DESCRIPTION
		1	2, 3, 6, 7	L	13, 15, 17, 53, 55			*A6	[A6] With [CS1] Sliding Door Assist Handle,With [GKA] Right Sliding Door
		1	2, 3, 6, 7	L	13, 15, 17, 53, 55			*E7	[E7] With [CS1] Sliding Door Assist Handle,With [GKA] Right Sliding Door
		1	2, 3, 6, 7	L	13, 15, 17, 53, 55			*F7	[F7] With [CS1] Sliding Door Assist Handle,With [GKA] Right Sliding Door
16									COVER, Handle
	1HC60XDVAA	1	2, 3, 6, 7	L	13, 15, 17, 53, 55			*A6	[A6] Driver Upper
		1	2, 3, 6, 7	L	13, 15, 17, 53, 55			*E7	[E7] Driver Upper
		1	2, 3, 6, 7	L	13, 15, 17, 53, 55			*F7	[F7] Driver Upper
	1HC61XDVAA	1	2, 3, 6, 7	L	13, 15, 17, 53, 55			*A6	[A6] Driver Bottom of Handle
		1	2, 3, 6, 7	L	13, 15, 17, 53, 55			*E7	[E7] Driver Bottom of Handle
		1	2, 3, 6, 7	L	13, 15, 17, 53, 55			*F7	[F7] Driver Bottom of Handle
	1HQ44NC-VAA	1	2, 3, 6, 7	L	13, 15, 17, 53, 55			*F7	[F7] Passenger Upper
		1	2, 3, 6, 7	L	13, 15, 17, 53, 55			*E7	[E7] Passenger Upper
		1	2, 3, 6, 7	L	13, 15, 17, 53, 55			*A6	[A6] Passenger Upper
	1HQ48NC-VAA	1	2, 3, 6, 7	L	13, 15, 17, 53, 55			*A6	[A6] Passenger Lower
		1	2, 3, 6, 7	L	13, 15, 17, 53, 55			*E7	[E7] Passenger Lower
		1	2, 3, 6, 7	L	13, 15, 17, 53, 55			*F7	[F7] Passenger Lower
17	68014367AA	2	2, 3, 6, 7	L	13, 15, 17, 53, 55				SCREW, Grab Handle Attachment, M6X35
18	68004878AA	2	2, 3, 6, 7	L	13, 15, 17, 53, 55				NUT, Grab Handle Attachment
19	06104748AA	2	2, 3, 6, 7	L	13, 15, 17, 53, 55				CLIP, Grab Handle Attachment
20	68014373AA	2	2, 3, 6, 7	L	13, 15, 17				WASHER, Grab Handle Attachment
21	68014364AA	1	2, 3, 6, 7	L	13, 15, 17, 53, 55				HANDLE, Grab

SPRINTER (VB)

SERIES	LINE	BODY	ENGINE	TRANSMISSION
L = LOWLINE	3 = HD DODGE 2WD 6 = Lt. Duty DODGE 4WD 2 = Med. Duty DODGE 2WD 7 = Med. Duty DODGE 4WD	17 = VAN WHEEL BASE 7 55 = WAGON WHEEL BASE 5 15 = VAN WHEEL BASE 5 53 = 119 WB 13 = 119 WB 05 = CAB CHASSIS WHEEL BASE 5 03 = CAB CHASSIS WHEEL BASE 3	EG2 = 3.5L V6 Gas Engine EXM = 3.0L V6 Turbo Diesel Engine	DGZ = 5-Speed Auto W5A380 Transmission

Interior Moldings and Pillars
Figure 50-210

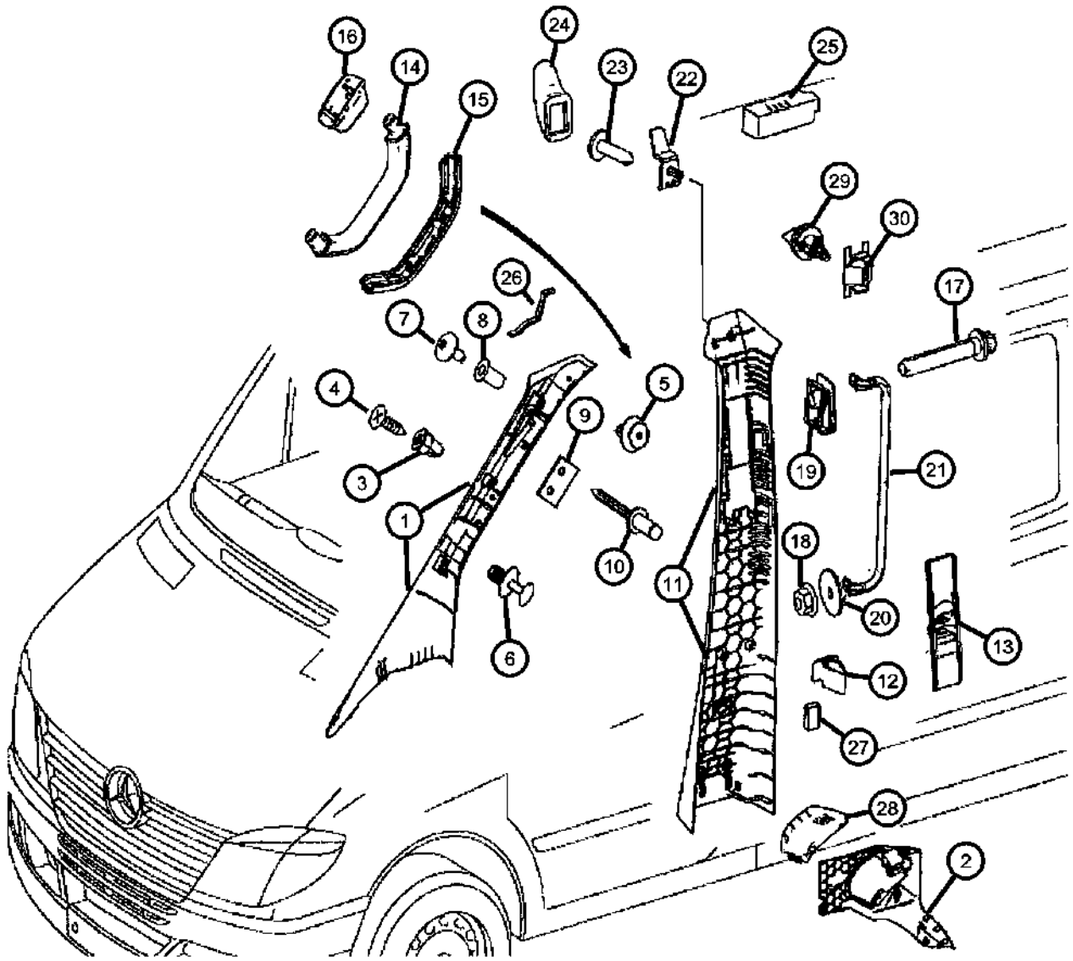

ITEM	PART NUMBER	QTY	LINE	SERIES	BODY	ENGINE	TRANS	TRIM	DESCRIPTION
22									HOOK, Coat
	05124273AA	1	3, 7	L	03, 05				
		1	2, 3, 6, 7	L	13, 15, 17, 53, 55				
23	06104575AA	1	2, 3, 6, 7	L					SCREW, Tapping, M4.8X1.6X19.0
24									HOOK, Coat
	0ZF49XDVAA	1	2, 3, 6, 7	L	13, 15, 17, 53, 55			*A6	[A6]
		1	2, 3, 6, 7	L	13, 15, 17, 53, 55			*E7	[E7]
		1	2, 3, 6, 7	L	13, 15, 17, 53, 55			*F7	[F7]
25									COVER
	1JB87NCVAA	1	2, 3, 6, 7	L	13, 15, 17, 53, 55			*A6	[A6]
		1	2, 3, 6, 7	L	13, 15, 17, 53, 55			*E7	[E7]
		1	2, 3, 6, 7	L	13, 15, 17, 53, 55			*F7	[F7]
26	68012811AA	2	2, 6	L	53, 55				SEAL
27									INSULATION
	68010773AA	3	3, 7	L	03, 05				
		3	2, 3, 6, 7	L	13, 15, 17, 53, 55				
28									COVER
	1HA86XDVAA	1	2, 3, 6, 7	L				*A6	[A6]
		1	2, 3, 6, 7	L				*E7	[E7]
		1	2, 3, 6, 7	L				*F7	[F7]
29	68014164AA	1	2, 3, 6, 7	L					RETAINER
30	68014165AA	1	2, 3, 6, 7	L					RETAINER

SPRINTER (VB)

SERIES	LINE	BODY	ENGINE	TRANSMISSION
L = LOWLINE	3 = HD DODGE 2WD 6 = Lt. Duty DODGE 4WD 2 = Med. Duty DODGE 2WD 7 = Med. Duty DODGE 4WD	17 = VAN WHEEL BASE 7 55 = WAGON WHEEL BASE 5 15 = VAN WHEEL BASE 5 53 = 119 WB 13 = 119 WB 05 = CAB CHASSIS WHEEL BASE 5 03 = CAB CHASSIS WHEEL BASE 3	EG2 = 3.5L V6 Gas Engine EXM = 3.0L V6 Turbo Diesel Engine	DGZ = 5-Speed Auto W5A380 Transmission

Quarter Trim Panel
Figure 50-215

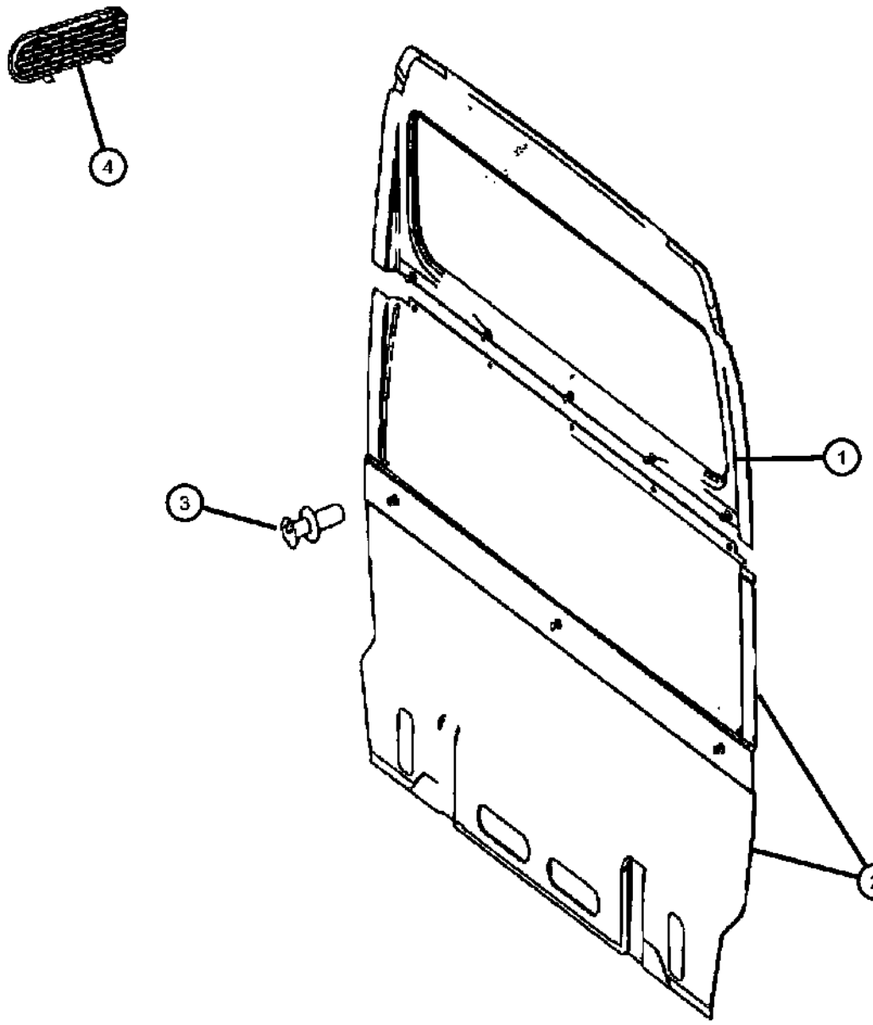

ITEM	PART NUMBER	QTY	LINE	SERIES	BODY	ENGINE	TRANS	TRIM	DESCRIPTION
1									PANEL, Cab Back
	1HD62ADVAA	1	2, 3, 6, 7	L	13, 15, 17			*A6	[A6] With [XJW] Cargo Partition with Windows With [CBJ] Inner Panelling Equipment
		1	2, 3, 6, 7	L	13, 15, 17			*E7	[E7] With [XJW] Cargo Partition with Windows With [CBJ] Inner Panelling Equipment
		1	2, 3, 6, 7	L	13, 15, 17			*F7	[F7] With [XJW] Cargo Partition with Windows With [CBJ] Inner Panelling Equipment
	1HD63ADVAA	1	2, 3, 6, 7	L	13, 15, 17			*A6	[A6] [CWC Cargo Partition with [CBJ] Inner Panelling, Inner Equipment
		1	2, 3, 6, 7	L	13, 15, 17			*E7	[E7] [CWC Cargo Partition with [CBJ] Inner Panelling, Inner Equipment
		1	2, 3, 6, 7	L	13, 15, 17			*F7	[F7] [CWC Cargo Partition with [CBJ] Inner Panelling, Inner Equipment
	1HD64ADVAA	1	2, 3, 6, 7	L	13, 15, 17			*A6	[A6] [MWJ] High Roof with [XJW] Cargo Partition with Windows with [CBJ] Inner Panelling, Inner Equpment
		1	2, 3, 6, 7	L	13, 15, 17			*E7	[E7] [MWJ] High Roof with [XJW] Cargo Partition with Windows with [CBJ] Inner Panelling, Inner Equpment
		1	2, 3, 6, 7	L	13, 15, 17			*F7	[F7] [MWJ] High Roof with [XJW] Cargo Partition with Windows with [CBJ] Inner Panelling, Inner Equpment
	1HD65ADVAA	1	2, 3, 6, 7	L	13, 15, 17			*A6	[A6] [MWJ] High Roof with [CWC] Cargo Partition with [CBJ] Inner Panelling, Inner Equpment
		1	2, 3, 6, 7	L	13, 15, 17			*E7	[E7] [MWJ] High Roof with [CWC] Cargo Partition with [CBJ] Inner Panelling, Inner Equpment
		1	2, 3, 6, 7	L	13, 15, 17			*F7	[F7] [MWJ] High Roof with [CWC] Cargo Partition with [CBJ] Inner Panelling, Inner Equpment
2									PANEL, Cab Back
	1HD66ADVAA	1	2, 3, 6, 7	L	03, 05, 13, 15, 17			*A6	[A6]
		1	2, 3, 6, 7	L	03, 05, 13, 15, 17			*E7	[E7]

SPRINTER (VB)

SERIES	LINE	BODY	ENGINE	TRANSMISSION
L = LOWLINE	3 = HD DODGE 2WD 6 = Lt. Duty DODGE 4WD 2 = Med. Duty DODGE 2WD 7 = Med. Duty DODGE 4WD	17 = VAN WHEEL BASE 7 55 = WAGON WHEEL BASE 5 15 = VAN WHEEL BASE 5 53 = 119 WB 13 = 119 WB 05 = CAB CHASSIS WHEEL BASE 5 03 = CAB CHASSIS WHEEL BASE 3	EG2 = 3.5L V6 Gas Engine EXM = 3.0L V6 Turbo Diesel Engine	DGZ = 5-Speed Auto W5A380 Transmission

Quarter Trim Panel
Figure 50-215

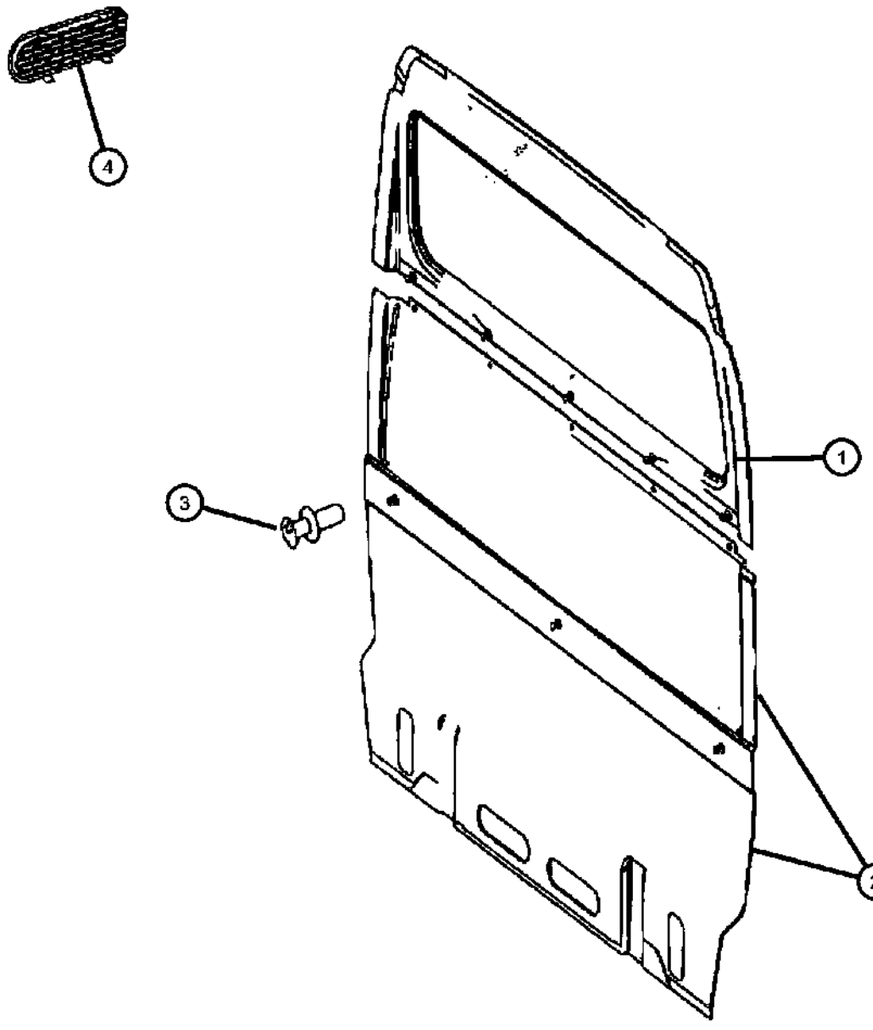

ITEM	PART NUMBER	QTY	LINE	SERIES	BODY	ENGINE	TRANS	TRIM	DESCRIPTION
		1	2, 3, 6, 7	L	03, 05, 13, 15, 17			*F7	[F7]
3									RIVET
	05174538AB	8	3, 7	L	03, 05			*A6	[A6]
		8	3, 7	L	03, 05			*E7	[E7]
		8	3, 7	L	03, 05			*F7	[F7]
		8	2, 3, 6, 7	L	13, 15, 17, 53, 55			*A6	[A6]
		8	2, 3, 6, 7	L	13, 15, 17, 53, 55			*E7	[E7]
		8	2, 3, 6, 7	L	13, 15, 17, 53, 55			*F7	[F7]
4	05123426AA	2	2, 3, 6, 7	L	13, 15, 17				EXHAUSTER, Quarter Panel

SPRINTER (VB)

SERIES	LINE	BODY	ENGINE	TRANSMISSION
L = LOWLINE	3 = HD DODGE 2WD 6 = Lt. Duty DODGE 4WD 2 = Med. Duty DODGE 2WD 7 = Med. Duty DODGE 4WD	17 = VAN WHEEL BASE 7 55 = WAGON WHEEL BASE 5 15 = VAN WHEEL BASE 5 53 = 119 WB 13 = 119 WB 05 = CAB CHASSIS WHEEL BASE 5 03 = CAB CHASSIS WHEEL BASE 3	EG2 = 3.5L V6 Gas Engine EXM = 3.0L V6 Turbo Diesel Engine	DGZ = 5-Speed Auto W5A380 Transmission

Rear Cab Trim Panel
Figure 50-220

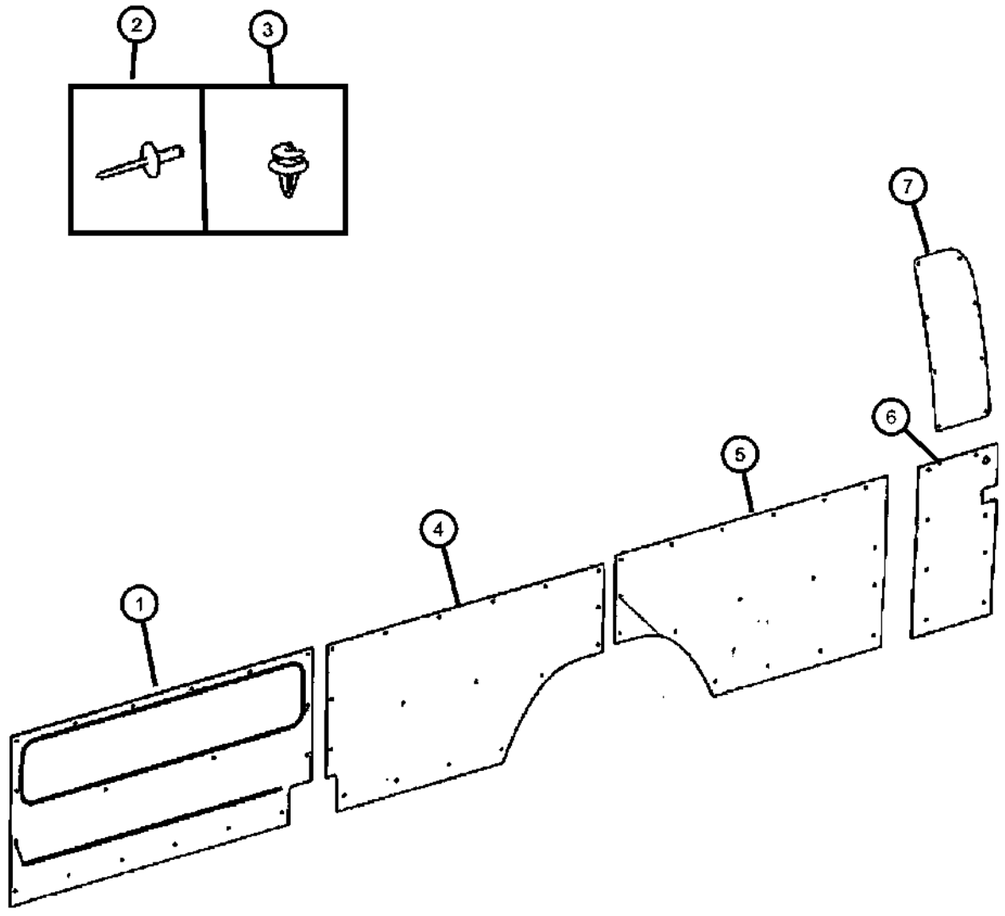

ITEM	PART NUMBER	QTY	LINE	SERIES	BODY	ENGINE	TRANS	TRIM	DESCRIPTION
NOTES: Sales Codes: [CMG] = Half Laminated Wood Cargo Panel [CMP] = Wall Liner - Carpeted [CV9] = Rear Ash Trays [5CF] = 144 inch Wheelbase [5CG] = 177 inch Wheelbase [5CK] = 177 inch Wheelbase Extended									
1									PANEL, Quarter Trim
	1HD28XDVAA	1	2, 3, 6, 7	L	13, 15, 17			*A6	[A6] [CMG] Cargo Area to Belt Panelling, Right
		1	2, 3, 6, 7	L	13, 15, 17			*E7	[E7] [CMG] Cargo Area to Belt Panelling, Right
		1	2, 3, 6, 7	L	13, 15, 17			*F7	[F7] [CMG] Cargo Area to Belt Panelling, Right
	1HD29XDVAA	1	2, 3, 6, 7	L	13, 15, 17			*A6	[A6] [CMG] Cargo Area to Belt Panelling, Left
		1	2, 3, 6, 7	L	13, 15, 17			*E7	[E7] [CMG] Cargo Area to Belt Panelling, Left
		1	2, 3, 6, 7	L	13, 15, 17			*F7	[F7] [CMG] Cargo Area to Belt Panelling, Left
2	68006483AA	6	2, 3, 6, 7	L	13, 15, 17, 53, 55				RIVET
3	68005152AA	99	2, 3, 6, 7	L	13, 15, 17, 53, 55				FASTENER
4									PANEL, Quarter Trim
	1HB67XDVAA	1	2, 3, 6, 7	L	15, 17, 55			*A6	[A6] With [CMP]
		1	2, 3, 6, 7	L	15, 17, 55			*E7	[E7] With [CMP]
		1	2, 3, 6, 7	L	15, 17, 55			*F7	[F7] With [CMP]
	1HD31NC-VAA	1	2, 3, 6, 7	L	13, 15, 17, 53, 55			*AL	[AL] With [CMP] [5CF] and [CV9]
		1	2, 3, 6, 7	L	13, 15, 17, 53, 55			*E7	[E7] With [CMP] [5CF] and [CV9]
		1	2, 3, 6, 7	L	13, 15, 17, 53, 55			*F7	[F7] With [CMP] [5CF] and [CV9]
	1HD33XDVAA	1	2, 3, 6, 7	L	13			*A6	[A6] With [CMP]
		1	2, 3, 6, 7	L	13			*E7	[E7] With [CMP]
		1	2, 3, 6, 7	L	13			*F7	[F7] With [CMP]
	1HD37TR-MAA	1	2, 3, 6, 7	L	13, 53			*A6	[A6] With [CMP]
		1	2, 3, 6, 7	L	13, 53			*E7	[E7] With [CMP]
		1	2, 3, 6, 7	L	13, 53			*F7	[F7] With [CMP]

SPRINTER (VB)

SERIES	LINE	BODY	ENGINE	TRANSMISSION
L = LOWLINE	3 = HD DODGE 2WD 6 = Lt. Duty DODGE 4WD 2 = Med. Duty DODGE 2WD 7 = Med. Duty DODGE 4WD	17 = VAN WHEEL BASE 7 55 = WAGON WHEEL BASE 5 15 = VAN WHEEL BASE 5 53 = 119 WB 13 = 119 WB 05 = CAB CHASSIS WHEEL BASE 5 03 = CAB CHASSIS WHEEL BASE 3	EG2 = 3.5L V6 Gas Engine EXM = 3.0L V6 Turbo Diesel Engine	DGZ = 5-Speed Auto W5A380 Transmission

Rear Cab Trim Panel
Figure 50-220

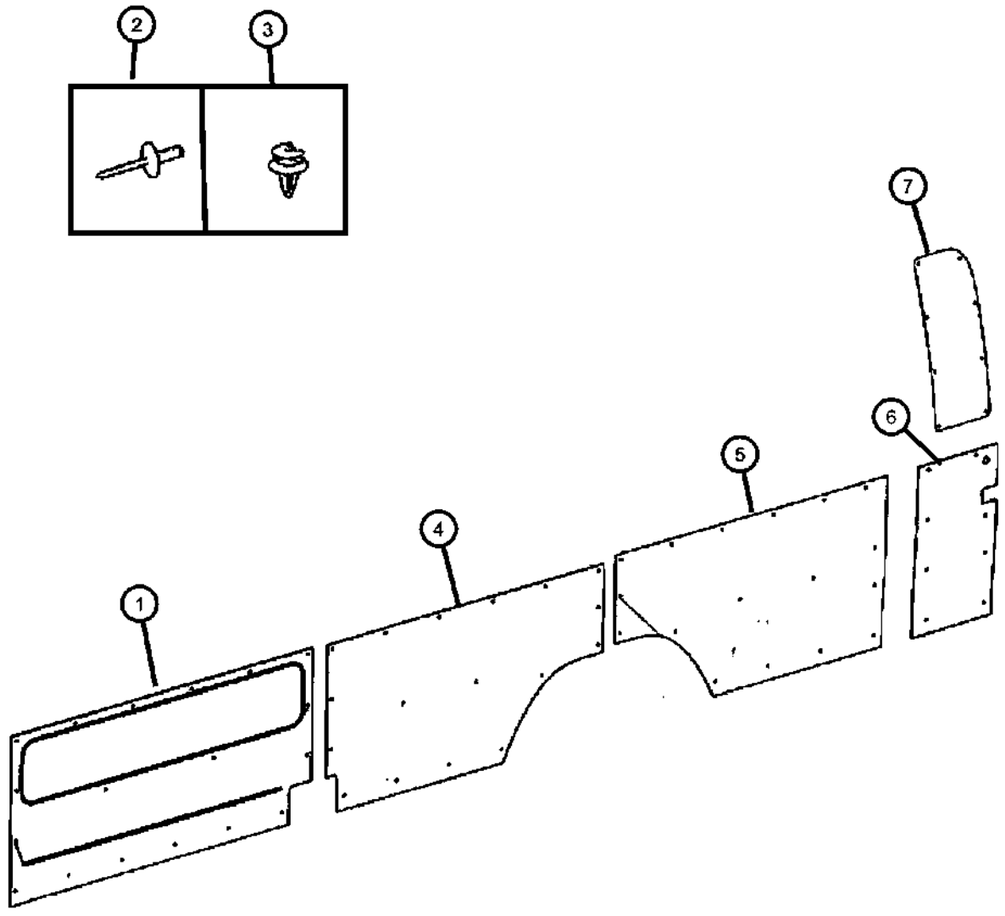

ITEM	PART NUMBER	QTY	LINE	SERIES	BODY	ENGINE	TRANS	TRIM	DESCRIPTION
	1HD39NC-VAA	1	2, 3, 6, 7	L	15, 17, 55			*A6	[A6] With [5CG or 5CK] with [CMP] and [CV9]
		1	2, 3, 6, 7	L	15, 17, 55			*E7	[E7] With [5CG or 5CK] with [CMP] and [CV9]
		1	2, 3, 6, 7	L	15, 17, 55			*F7	[F7] With [5CG or 5CK] with [CMP] and [CV9]
	1HD44XDVAA	1	2, 3, 6, 7	L	15, 17, 55			*A6	[A6] With 5CG or 5CK] with [CMG]
		1	2, 3, 6, 7	L	15, 17, 55			*E7	[E7] With 5CG or 5CK] with [CMG]
		1	2, 3, 6, 7	L	17, 55, 15			*F7	[F7] With 5CG or 5CK] with [CMG]
5									PANEL, Quarter Trim
	1HB70XDVAA	1	2, 3, 6, 7	L	17			*A6	[A6] With [CMP]
		1	2, 3, 6, 7	L	17			*E7	[E7] With [CMP]
		1	2, 3, 6, 7	L	17			*F7	[F7] With [CMP]
	1HD50XDVAA	1	2, 3, 6, 7	L	17			*A6	[A6] With [CMG]
		1	2, 3, 6, 7	L	17			*E7	[E7] With [CMG]
		1	2, 3, 6, 7	L	17			*F7	[F7] With [CMG]
6									PANEL, Quarter Trim
	1HD54XDVAA	1	2, 3, 6, 7	L	17			*A6	[A6] With [5CK], Right
		1	2, 3, 6, 7	L	17			*E7	[E7] With [5CK], Right
		1	2, 3, 6, 7	L	17			*F7	[F7] With [5CK], Right
	1HD55XDVAA	1	2, 3, 6, 7	L	17			*A6	[A6] With [5CK], Left
		1	2, 3, 6, 7	L	17			*E7	[E7] With [5CK], Left
		1	2, 3, 6, 7	L	17			*F7	[F7] With [5CK], Left
	1HD56XDVAA	1	2, 3, 6, 7	L	17			*A6	[A6] With [CMG], Right
		1	2, 3, 6, 7	L	17			*E7	[E7] With [CMG], Right
		1	2, 3, 6, 7	L	17			*F7	[F7] With [CMG], Right
	1HD57XDVAA	1	2, 3, 6, 7	L	17			*A6	[A6] With [CMG], Left
		1	2, 3, 6, 7	L	17			*E7	[E7] With [CMG], Left
		1	2, 3, 6, 7	L	17			*F7	[F7] With [CMG], Left
7									PANEL, Quarter Trim
	1HD58XDVAA	1	2, 3, 6, 7	L	17			*A6	[A6] With [5CK], Right
		1	2, 3, 6, 7	L	17			*E7	[E7] With [5CK], Right

SPRINTER (VB)

SERIES	LINE	BODY	ENGINE	TRANSMISSION
L = LOWLINE	3 = HD DODGE 2WD 6 = Lt. Duty DODGE 4WD 2 = Med. Duty DODGE 2WD 7 = Med. Duty DODGE 4WD	17 = VAN WHEEL BASE 7 55 = WAGON WHEEL BASE 5 15 = VAN WHEEL BASE 5 53 = 119 WB 13 = 119 WB 05 = CAB CHASSIS WHEEL BASE 5 03 = CAB CHASSIS WHEEL BASE 3	EG2 = 3.5L V6 Gas Engine EXM = 3.0L V6 Turbo Diesel Engine	DGZ = 5-Speed Auto W5A380 Transmission

Rear Cab Trim Panel
Figure 50-220

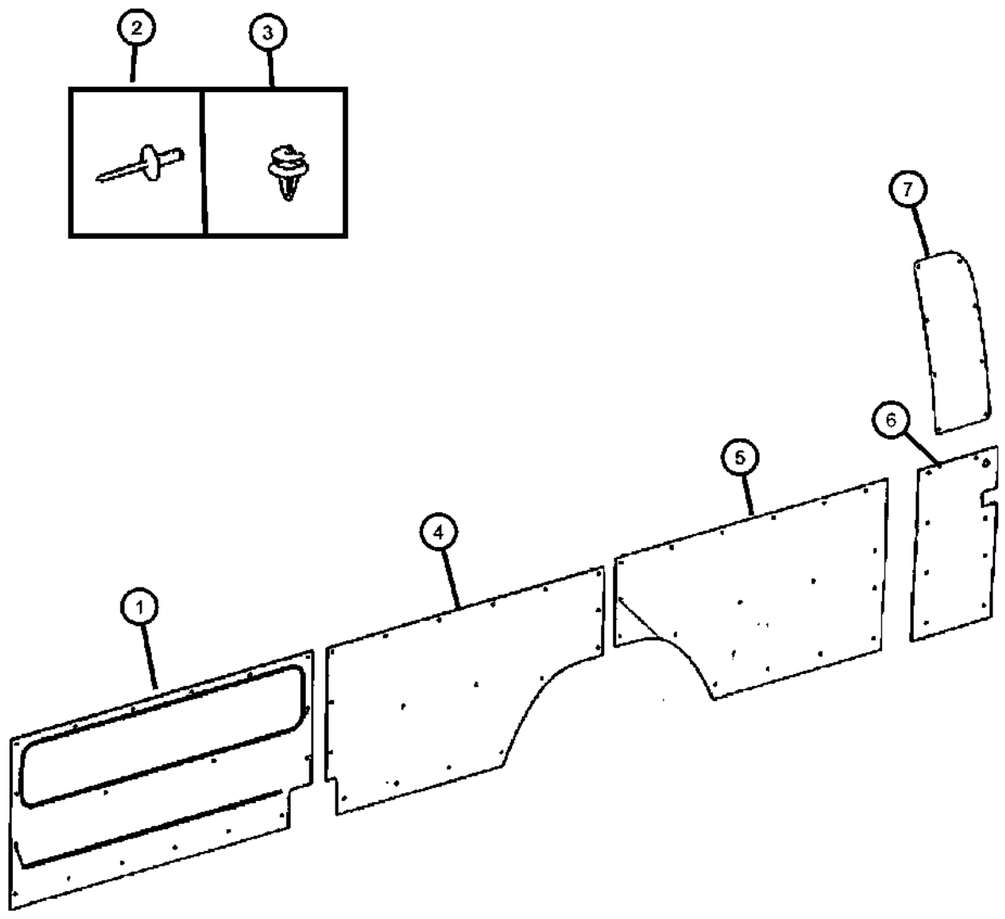

ITEM	PART NUMBER	QTY	LINE	SERIES	BODY	ENGINE	TRANS	TRIM	DESCRIPTION
		1	2, 3, 6, 7	L	17			*F7	[F7] With [SCK], Right
	1HD59XDVAA	1	2, 3, 6, 7	L	17			*A6	[A6] With [5CK], Left
		1	2, 3, 6, 7	L	17			*E7	[E7] With [5CK], Left
		1	2, 3, 6, 7	L	17			*F7	[F7] With [5CK], Left
	1HD60XDVAA	1	2, 3, 6, 7	L	17			*A6	[A6] With [CMG], Right
		1	2, 3, 6, 7	L	17			*E7	[E7] With [CMG], Right
		1	2, 3, 6, 7	L	17			*F7	[F7] With [CMG], Right
	1HD61XDVAA	1	2, 3, 6, 7	L	17			*A6	[A6] With [CMG], Left
		1	2, 3, 6, 7	L	17			*E7	[E7] With [CMG], Left
		1	2, 3, 6, 7	L	17			*F7	[F7] With [CMG], Left

SPRINTER (VB)

SERIES	LINE	BODY	ENGINE	TRANSMISSION
L = LOWLINE	3 = HD DODGE 2WD 6 = Lt. Duty DODGE 4WD 2 = Med. Duty DODGE 2WD 7 = Med. Duty DODGE 4WD	17 = VAN WHEEL BASE 7 55 = WAGON WHEEL BASE 5 15 = VAN WHEEL BASE 5 53 = 119 WB 13 = 119 WB 05 = CAB CHASSIS WHEEL BASE 5 03 = CAB CHASSIS WHEEL BASE 3	EG2 = 3.5L V6 Gas Engine EXM = 3.0L V6 Turbo Diesel Engine	DGZ = 5-Speed Auto W5A380 Transmission

Inner Paneling Sidewall, Plastic
Figure 50-225

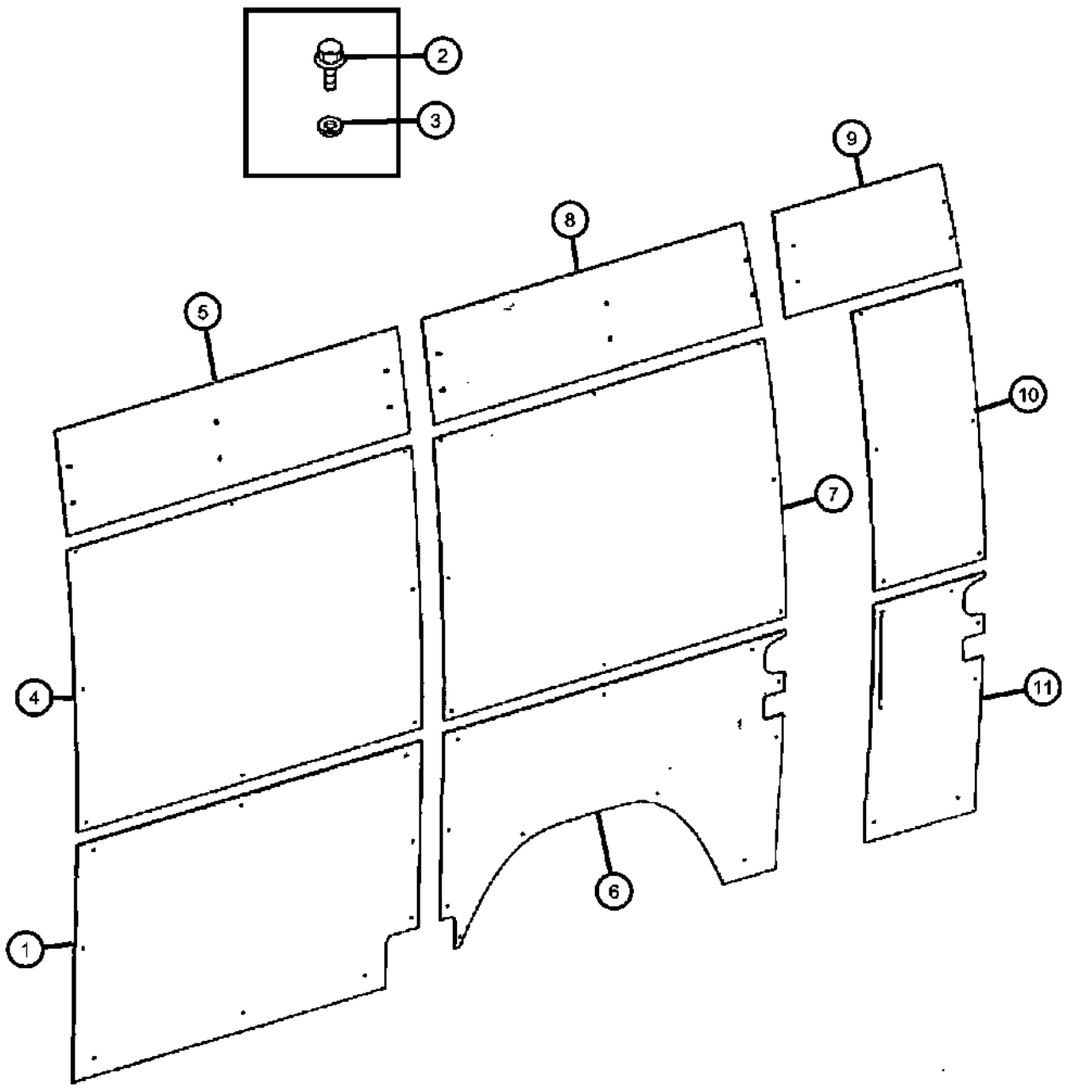

ITEM	PART NUMBER	QTY	LINE	SERIES	BODY	ENGINE	TRANS	TRIM	DESCRIPTION
NOTES: Sales Codes: [CTE] = Panel Van Interior Lining Panel [GLF] = Rear Hinged Doors [LDB] = Cargo Compartment Lamp [5CF] = 144 inch Wheelbase [5CG] = 170 inch Wheelbase [5CK] = 170 inch Wheelbase Extended									
1									PANEL, Quarter Trim
	1JE10NCVAA	1	2, 3, 6, 7	L	13, 15, 17, 53, 55			*AL	[AL]
		1	2, 3, 6, 7	L	13, 15, 55, 17, 53			*E7	[E7]
		1	2, 3, 6, 7	L	13, 15, 17, 53, 55			*F7	[F7]
2	06104117AA	8	2, 3, 6, 7	L	13, 15, 17, 53, 55				SCREW, Hex Head
3	05125754AA	AR	2, 3, 6, 7	L					WASHER
4									PANEL, Quarter Trim
	1JE18NCVAA	1	2, 3, 6, 7	L	13, 15, 17, 53, 55			*AL	[AL]
		1	2, 3, 6, 7	L	13, 15, 17, 53, 55			*E7	[E7]
		1	2, 3, 6, 7	L	13, 15, 17, 53, 55			*F7	[F7]
5									PANEL, Quarter Trim
	1JE24NCVAA	1	2, 3, 6, 7	L	13, 15, 17, 53, 55			*AL	[AL], Right
		1	2, 3, 6, 7	L	13, 15, 17, 53, 55			*E7	[E7], Right
		1	2, 3, 6, 7	L	13, 15, 17, 53, 55			*F7	[F7], Right
	1JE25NCVAA	1	2, 3, 6, 7	L					Left
6									PANEL, Quarter Trim
	1JE27NCVAA	1	2, 3, 6, 7	L	13, 15, 17, 53, 55			*AL	[AL] With [5CF] and [CTE], Right & Left
		1	2, 3, 6, 7	L	13, 15, 17, 53, 55			*E7	[E7] With [5CF] and [CTE], Right & Left
		1	2, 3, 6, 7	L	13, 15, 17, 53, 55			*F7	[F7] With [5CF] and [CTE], Right & Left
	1JE28NCVAA	1	2, 3, 6, 7	L	17, 53, 55, 13, 15			*AL	[AL] With [5CF] and [GLF], Right & Left
		1	2, 3, 6, 7	L	13, 15, 17, 53, 55			*E7	[E7] With [5CF] and [GLF], Right & Left

SPRINTER (VB)

SERIES	LINE	BODY	ENGINE	TRANSMISSION
L = LOWLINE	3 = HD DODGE 2WD 6 = Lt. Duty DODGE 4WD 2 = Med. Duty DODGE 2WD 7 = Med. Duty DODGE 4WD	17 = VAN WHEEL BASE 7 55 = WAGON WHEEL BASE 5 15 = VAN WHEEL BASE 5 53 = 119 WB 13 = 119 WB 05 = CAB CHASSIS WHEEL BASE 5 03 = CAB CHASSIS WHEEL BASE 3	EG2 = 3.5L V6 Gas Engine EXM = 3.0L V6 Turbo Diesel Engine	DGZ = 5-Speed Auto W5A380 Transmission

Inner Paneling Sidewall, Plastic
Figure 50-225

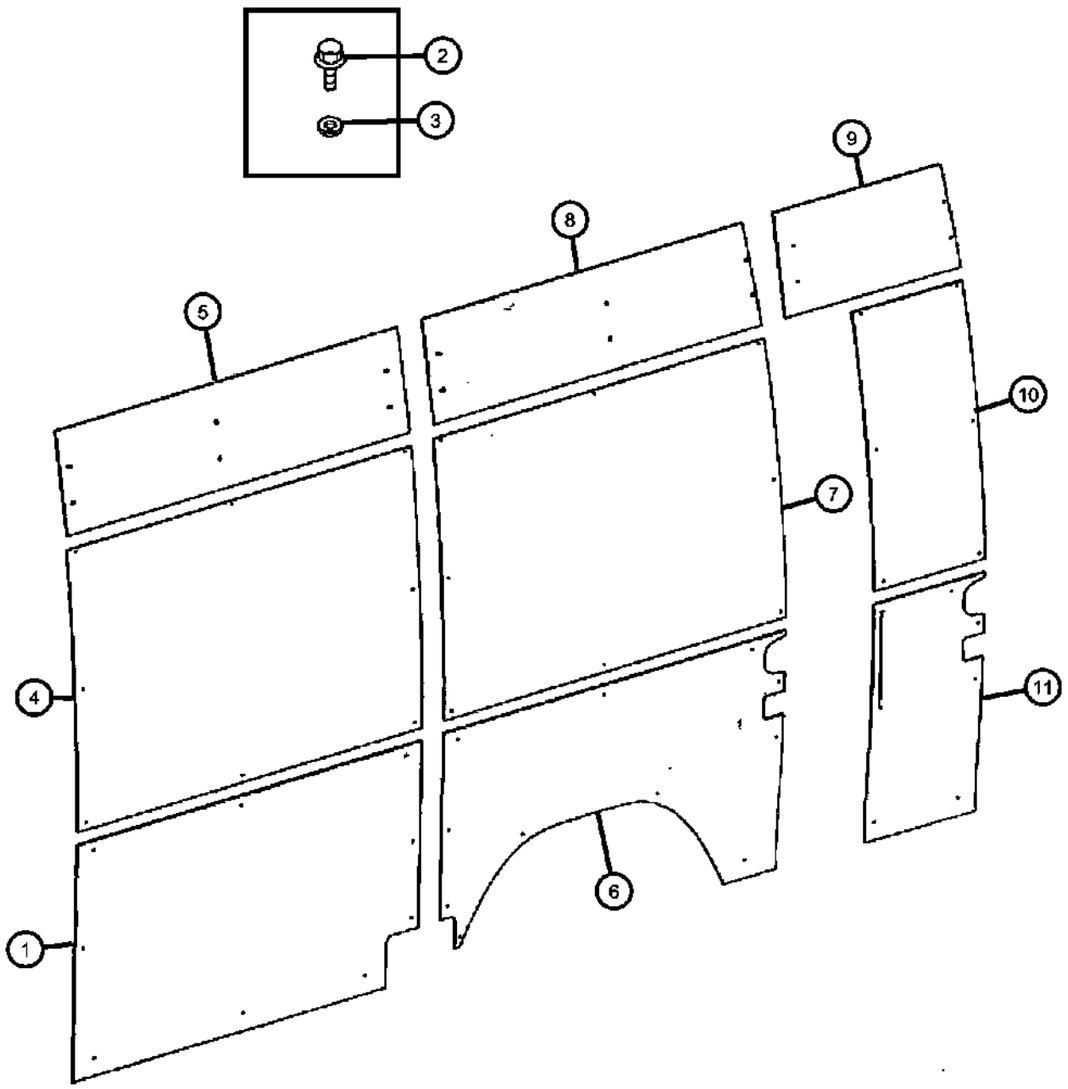

ITEM	PART NUMBER	QTY	LINE	SERIES	BODY	ENGINE	TRANS	TRIM	DESCRIPTION
		1	2, 3, 6, 7	L	13, 15, 17, 53, 55			*F7	[F7] With [5CF] and [GLF], Right & Left
	1JE29NCVAA	1	2, 3, 6, 7	L	13, 15, 17, 53, 55			*AL	[AL] With [5CG] and [CTE], Right & Left
		1	2, 3, 6, 7	L	13, 15, 17, 53, 55			*E7	[E7] With [5CG] and [CTE], Right & Left
		1	2, 3, 6, 7	L	13, 15, 17, 53, 55			*F7	[F7] With [5CG] and [CTE], Right & Left
	1JE30NCVAA	1	2, 3, 6, 7	L	13, 15, 17			*AL	[AL] With [5CG] [CTE] and [GLF], Right & Left
		1	2, 3, 6, 7	L	13, 15, 17			*E7	[E7] With [5CG] [CTE] and [GLF], Right & Left
		1	2, 3, 6, 7	L	13, 15, 17			*F7	[F7] With [5CG] [CTE] and [GLF], Right & Left
	1JE31NCVAA	1	2, 3, 6, 7	L	13, 15, 17			*AL	[AL] With 5CK] and [CTE], Right & Left
		1	2, 3, 6, 7	L	13, 15, 17			*E7	[E7] With 5CK] and [CTE], Right & Left
		1	2, 3, 6, 7	L	13, 15, 17			*F7	[F7] With 5CK] and [CTE], Right & Left
7									PANEL, Quarter Trim
	1JE32NCVAA	1	2, 3, 6, 7	L	13, 15, 17			*AL	[AL] With [5CG], Right & Left
		1	2, 3, 6, 7	L	13, 15, 17			*E7	[E7] With [5CG], Right & Left
		1	2, 3, 6, 7	L	13, 15, 17			*F7	[F7] With [5CG], Right & Left
	1JE45NCVAA	1	2, 3, 6, 7	L	13, 15, 17			*AL	[AL] With [5CF], Right & Left
		1	2, 3, 6, 7	L	13, 15, 17			*E7	[E7] With [5CF], Right & Left
		1	2, 3, 6, 7	L	13, 15, 17			*F7	[F7] With [5CF], Right & Left
8									PANEL, Quarter Trim
	1JE46NCVAA	1	2, 3, 6, 7	L	13, 15, 17			*AL	[AL] With [5CG] and [CTE]
		1	2, 3, 6, 7	L	13, 15, 17			*E7	[E7] With [5CG] and [CTE]
		1	2, 3, 6, 7	L	13, 15, 17			*F7	[F7] With [5CG] and [CTE]
	1JE47NCVAA	1	2, 3, 6, 7	L	13, 15, 17			*AL	[AL] With [5CG] [CTE and [LDB]
		1	2, 3, 6, 7	L	13, 15, 17			*E7	[E7] With [5CG] [CTE and [LDB]
		1	2, 3, 6, 7	L	13, 15, 17			*F7	[F7] With [5CG] [CTE and [LDB]
	1JE48NCVAA	1	2, 3, 6, 7	L	13, 15, 17			*AL	[AL] With [5CK] and [CTE]
		1	2, 3, 6, 7	L	13, 15, 17			*E7	[E7] With [5CK] and [CTE]
		1	2, 3, 6, 7	L	13, 15, 17			*F7	[F7] With [5CK] and [CTE]

SPRINTER (VB)

SERIES	LINE	BODY	ENGINE	TRANSMISSION
L = LOWLINE	3 = HD DODGE 2WD 6 = Lt. Duty DODGE 4WD 2 = Med. Duty DODGE 2WD 7 = Med. Duty DODGE 4WD	17 = VAN WHEEL BASE 7 55 = WAGON WHEEL BASE 5 15 = VAN WHEEL BASE 5 53 = 119 WB 13 = 119 WB 05 = CAB CHASSIS WHEEL BASE 5 03 = CAB CHASSIS WHEEL BASE 3	EG2 = 3.5L V6 Gas Engine EXM = 3.0L V6 Turbo Diesel Engine	DGZ = 5-Speed Auto W5A380 Transmission

Inner Paneling Sidewall, Plastic
Figure 50-225

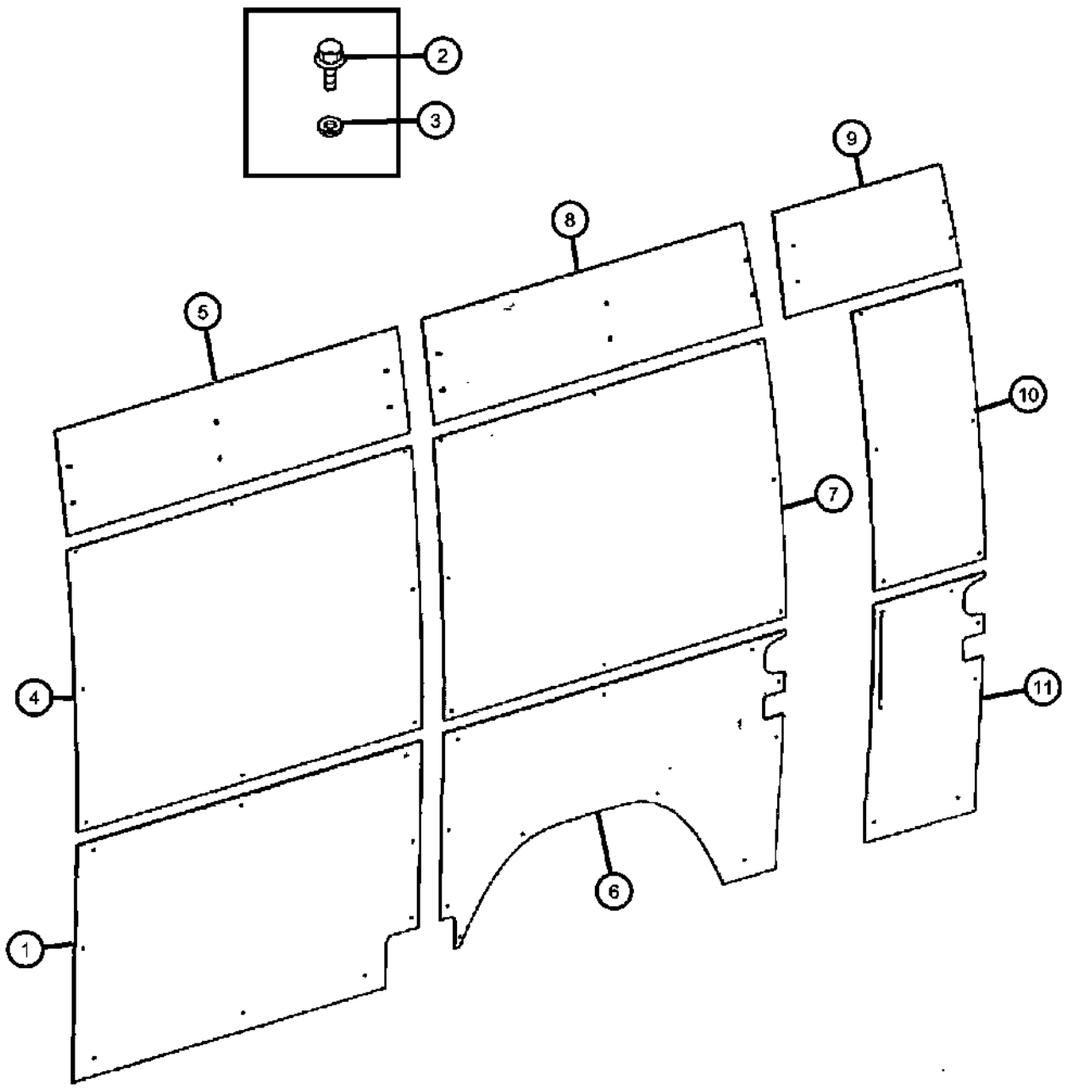

ITEM	PART NUMBER	QTY	LINE	SERIES	BODY	ENGINE	TRANS	TRIM	DESCRIPTION
9									PANEL, Quarter Trim
	1JE49NCVAA	1	2, 3, 6, 7	L	13, 15, 17			*AL	[AL] With [CTE]
		1	2, 3, 6, 7	L	13, 15, 17			*E7	[E7] With [CTE]
		1	2, 3, 6, 7	L	13, 15, 17			*F7	[F7] With [CTE]
	1JE50NCVAA	1	2, 3, 6, 7	L	13, 15, 17			*AL	[AL] With [CTE] and [GLF]
		1	2, 3, 6, 7	L	13, 15, 17			*E7	[E7] With [CTE] and [GLF]
		1	2, 3, 6, 7	L	13, 15, 17			*F7	[F7] With [CTE] and [GLF]
10									PANEL, Quarter Trim
	1JE51NCVAA	1	2, 3, 6, 7	L	13, 15, 17			*F7	[F7]
		1	2, 3, 6, 7	L	13, 15, 17			*AL	[AL]
		1	2, 3, 6, 7	L	15, 17, 13			*E7	[E7]
11									PANEL, Quarter Trim
	1JE52NCVAA	1	2, 3, 6, 7	L	13, 15, 17				Left
	1JE53NCVAA	1	2, 3, 6, 7	L	13, 15, 17			*AL	[AL], Right
		1	2, 3, 6, 7	L	13, 15, 17			*E7	[E7], Right
		1	2, 3, 6, 7	L	13, 15, 17			*F7	[F7], Right

SPRINTER (VB)

SERIES	LINE	BODY	ENGINE	TRANSMISSION
L = LOWLINE	3 = HD DODGE 2WD 6 = Lt. Duty DODGE 4WD 2 = Med. Duty DODGE 2WD 7 = Med. Duty DODGE 4WD	17 = VAN WHEEL BASE 7 55 = WAGON WHEEL BASE 5 15 = VAN WHEEL BASE 5 53 = 119 WB 13 = 119 WB 05 = CAB CHASSIS WHEEL BASE 5 03 = CAB CHASSIS WHEEL BASE 3	EG2 = 3.5L V6 Gas Engine EXM = 3.0L V6 Turbo Diesel Engine	DGZ = 5-Speed Auto W5A380 Transmission

Inner Paneling Sidewall, Fabric
Figure 50-230

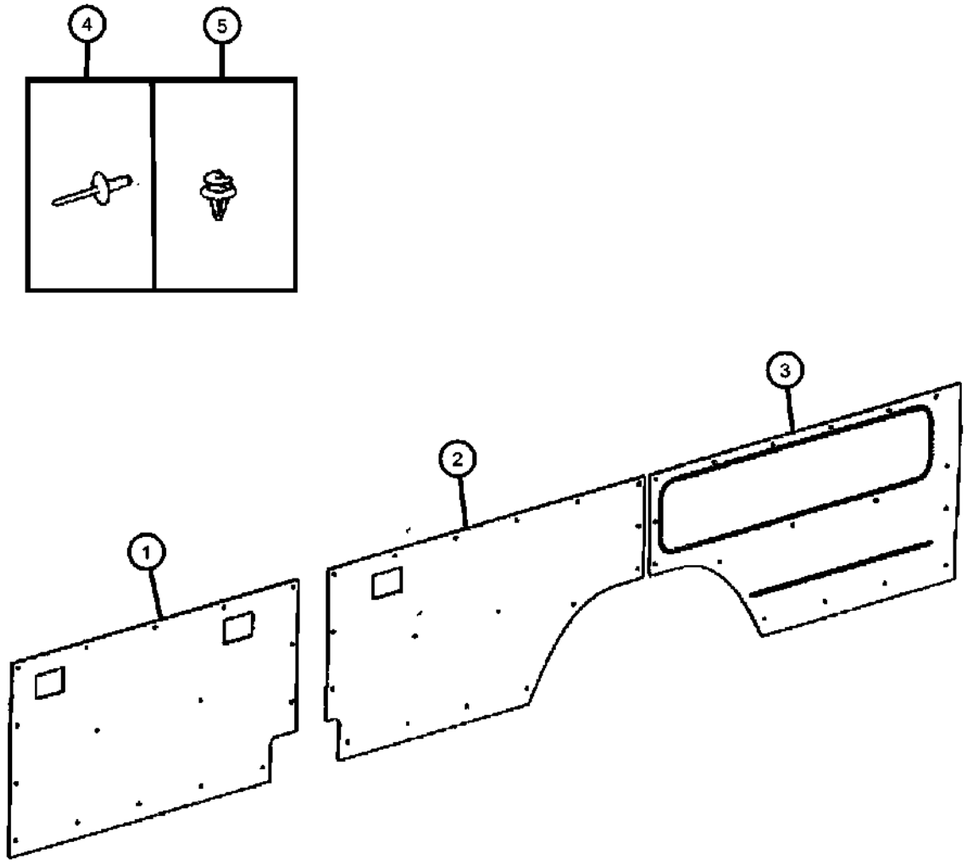

ITEM	PART NUMBER	QTY	LINE	SERIES	BODY	ENGINE	TRANS	TRIM	DESCRIPTION
1									PANEL, Quarter Trim
	1HD241E7AA	1	2, 3, 6, 7	L	53, 55			*A6	[A6] With [RC5] Speaker Package, Right
		1	2, 3, 6, 7	L	53, 55			*E7	[E7] With [RC5] Speaker Package, Right
		1	2, 3, 6, 7	L	53, 55			*F7	[F7] With [RC5] Speaker Package, Right
	1HD251E7AA	1	2, 3, 6, 7	L	53, 55			*A6	[A6] With [RC5] Speaker Package, Left
		1	2, 3, 6, 7	L	53, 55			*E7	[E7] With [RC5] Speaker Package, Left
		1	2, 3, 6, 7	L	53, 55			*F7	[F7] With [RC5] Speaker Package, Left
	1HD261E7AA	1	2, 3, 6, 7	L	53, 55			*A6	[A6] Without [RC5] Speaker Package, Right
		1	2, 3, 6, 7	L	53, 55			*E7	[E7] Without [RC5] Speaker Package, Right
		1	2, 3, 6, 7	L	53, 55			*F7	[F7] Without [RC5] Speaker Package, Right
	1HD271E7AA	1	2, 3, 6, 7	L	53, 55			*A6	[A6] Without [RC5] Speaker Package, Left
		1	2, 3, 6, 7	L	53, 55			*E7	[E7] Without [RC5] Speaker Package, Left
		1	2, 3, 6, 7	L	53, 55			*F7	[F7] Without [RC5] Speaker Package, Left
2									PANEL, Quarter Trim
	1HD211E7AA	1	2, 6	L	53			*A6	[A6] With [CV9] Rear Ash Trays without [RC5] Speaker Package, Left
		1	2, 6	L	53			*E7	[E7] With [CV9] Rear Ash Trays without [RC5] Speaker Package, Left
		1	2, 6	L	53			*F7	[F7] With [CV9] Rear Ash Trays without [RC5] Speaker Package, Left
	1HD351E7AA	1	2, 6	L	53			*A6	[A6] With [CV9] Rear Ash Trays with [RC5] Speaker Package, Left
		1	2, 6	L	13, 53			*E7	[E7] With [CV9] Rear Ash Trays with [RC5] Speaker Package, Left
		1	2, 6	L	13, 53			*F7	[F7] With [CV9] Rear Ash Trays with [RC5] Speaker Package, Left

SPRINTER (VB)

SERIES	LINE	BODY	ENGINE	TRANSMISSION
L = LOWLINE	3 = HD DODGE 2WD 6 = Lt. Duty DODGE 4WD 2 = Med. Duty DODGE 2WD 7 = Med. Duty DODGE 4WD	17 = VAN WHEEL BASE 7 55 = WAGON WHEEL BASE 5 15 = VAN WHEEL BASE 5 53 = 119 WB 13 = 119 WB 05 = CAB CHASSIS WHEEL BASE 5 03 = CAB CHASSIS WHEEL BASE 3	EG2 = 3.5L V6 Gas Engine EXM = 3.0L V6 Turbo Diesel Engine	DGZ = 5-Speed Auto W5A380 Transmission

Inner Paneling Sidewall, Fabric
Figure 50-230

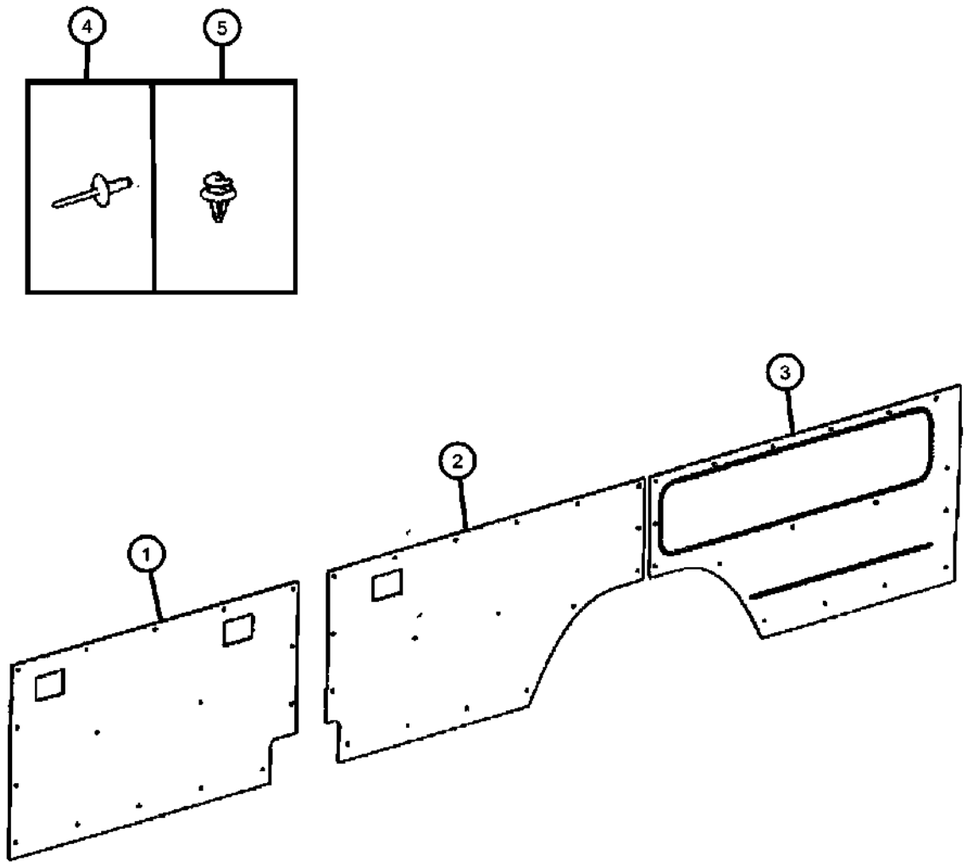

ITEM	PART NUMBER	QTY	LINE	SERIES	BODY	ENGINE	TRANS	TRIM	DESCRIPTION
	1HD41NC-VAA	1	2, 3, 6, 7	L	55			*A6	[A6] With [CV9] Rear Ash Trays with [RC5] Speaker Package, Left
		1	3, 2, 7, 6	L	55			*E7	[E7] With [CV9] Rear Ash Trays with [RC5] Speaker Package, Left
		1	2, 3, 6, 7	L	55			*F7	[F7] With [CV9] Rear Ash Trays with [RC5] Speaker Package, Left
3									PANEL, Quarter Trim
	1HD531E7AA	1	2, 3, 6, 7	L	13, 15, 17, 53, 55			*AL	[AL], Right
		1	2, 3, 6, 7	L	13, 15, 17, 53, 55			*E7	[E7], Right
		1	2, 3, 6, 7	L	13, 15, 17, 53, 55			*F7	[F7], Right
4	68006483AA	12	2, 3, 6, 7	L	13, 15, 17, 53, 55				RIVET
5	68005152AA	12	2, 3, 6, 7	L	13, 15, 17, 53, 55				FASTENER

SPRINTER (VB)

SERIES	LINE	BODY	ENGINE	TRANSMISSION
L = LOWLINE	3 = HD DODGE 2WD 6 = Lt. Duty DODGE 4WD 2 = Med. Duty DODGE 2WD 7 = Med. Duty DODGE 4WD	17 = VAN WHEEL BASE 7 55 = WAGON WHEEL BASE 5 15 = VAN WHEEL BASE 5 53 = 119 WB 13 = 119 WB 05 = CAB CHASSIS WHEEL BASE 5 03 = CAB CHASSIS WHEEL BASE 3	EG2 = 3.5L V6 Gas Engine EXM = 3.0L V6 Turbo Diesel Engine	DGZ = 5-Speed Auto W5A380 Transmission

Window Airbag, Head Side Airbag
Figure 50-250

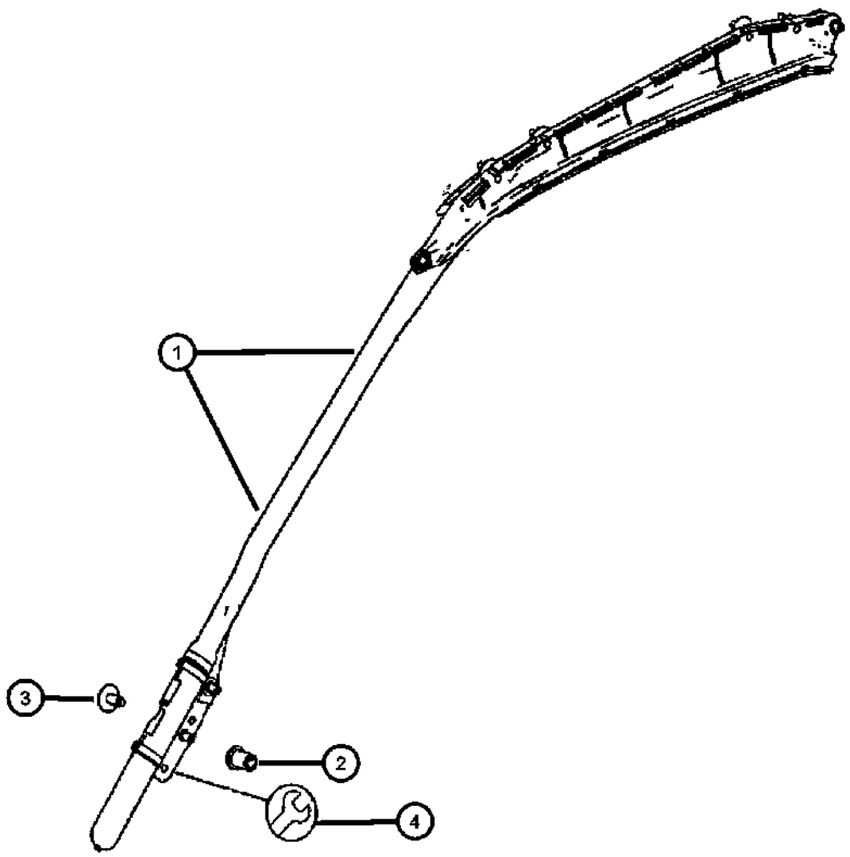

ITEM	PART NUMBER	QTY	LINE	SERIES	BODY	ENGINE	TRANS	TRIM	DESCRIPTION
1									AIR BAG, Side Curtain
	1HD69NC-VAA	1	2, 3, 6, 7	L				*A6	[A6], Left
		1	2, 3, 6, 7	L				*E7	[E7], Left
		1	2, 3, 6, 7	L				*F7	[F7], Left
	1HD70NC-VAA	1	2, 3, 6, 7	L				*A6	[A6], Right
		1	2, 3, 6, 7	L				*E7	[E7], Right
		1	2, 3, 6, 7	L				*F7	[F7], Right
2	05133486AA	4	2, 3, 6, 7	L					RIVET
3	68014337AA	8	2, 3, 6, 7	L					SCREW
4	68016751AA	2	2, 3, 6, 7	L					CONNECTORRight & Left

SPRINTER (VB)

SERIES	LINE	BODY	ENGINE	TRANSMISSION
L = LOWLINE	3 = HD DODGE 2WD 6 = Lt. Duty DODGE 4WD 2 = Med. Duty DODGE 2WD 7 = Med. Duty DODGE 4WD	17 = VAN WHEEL BASE 7 55 = WAGON WHEEL BASE 5 15 = VAN WHEEL BASE 5 53 = 119 WB 13 = 119 WB 05 = CAB CHASSIS WHEEL BASE 5 03 = CAB CHASSIS WHEEL BASE 3	EG2 = 3.5L V6 Gas Engine EXM = 3.0L V6 Turbo Diesel Engine	DGZ = 5-Speed Auto W5A380 Transmission

Cargo Organizer, Cargo Retainers
Figure 50-275

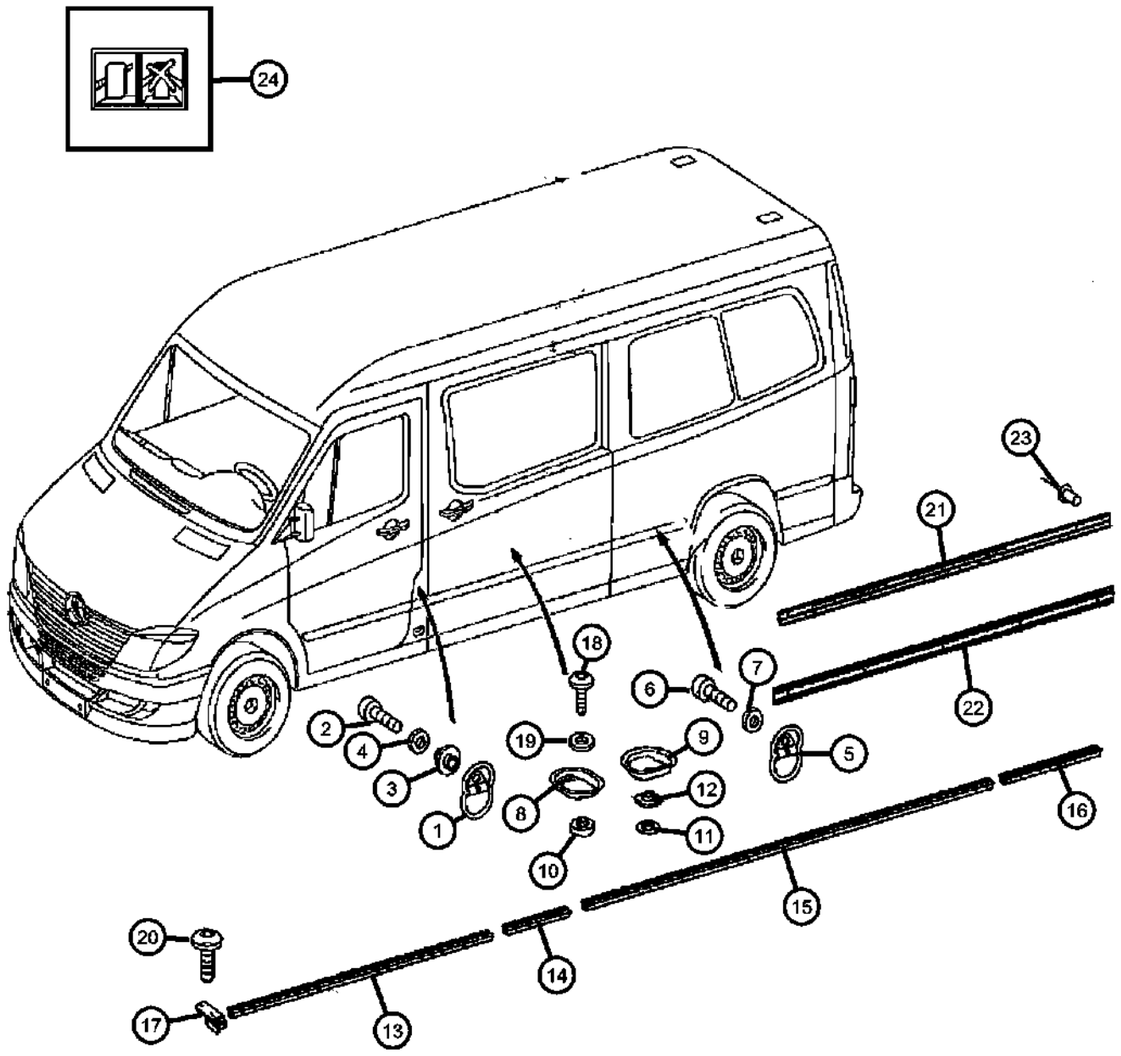

ITEM	PART NUMBER	QTY	LINE	SERIES	BODY	ENGINE	TRANS	TRIM	DESCRIPTION
1	05170492AA	2	2, 3, 6, 7	L	13, 15, 17, 53, 55				RETAINER
2									BOLT, Hex Head
	05103816AA	2	2, 3, 6, 7	L	13, 15, 17, 53, 55				
		14	3, 7	L	17				
3	68015030AA	2	2, 3, 6, 7	L	13, 15, 17, 53, 55				SPACER
4	05103726AB	2	2, 3, 6, 7	L	13, 15, 17, 53, 55				WASHER
5	05170492AA	2	2, 3, 6, 7	L	13, 15, 17, 53, 55				RETAINER
6									BOLT, Hex Head
	05103816AA	2	2, 3, 6, 7	L	13, 15, 17, 53, 55				
		14	3, 7	L	17				
7									WASHER
	05142916AA	6	2, 3, 6, 7	L	13, 15, 17, 53, 55				
		14	3, 7	L	17				
8	05170494AA	99	2, 3, 6, 7	L	13, 15, 17, 53, 55				RETAINER, Case and Load Securing
9	68015034AA	12	2, 3, 6, 7	L	13, 15, 17, 53, 55				RETAINER
10									SPACER
	68015032AA	2	2, 3, 6, 7	L	13, 15, 17, 53, 55				[11MM] Case and Load Securing
	68015033AA	2	2, 3, 6, 7	L	13, 15, 17, 53, 55				[13MM] Case and Load Securing
11	68015036AA	2	2, 3, 6, 7	L	53, 55, 13, 15, 17				BUSHING
12	68015035AA	8	2, 3, 6, 7	L	13, 15, 17, 53, 55				BUSHING
13	68015039AA	2	3, 7	L	13				RAIL
14	68015040AA	2	3, 7	L	15, 17				RAIL
15									RAIL
	68015041AA	2	3, 7	L	15, 17				
	68015042AA	2	3, 7	L	13				
16	68015046AA	2	3, 7	L	17				RAIL
17									CAP

SPRINTER (VB)

SERIES	LINE	BODY	ENGINE	TRANSMISSION
L = LOWLINE	3 = HD DODGE 2WD 6 = Lt. Duty DODGE 4WD 2 = Med. Duty DODGE 2WD 7 = Med. Duty DODGE 4WD	17 = VAN WHEEL BASE 7 55 = WAGON WHEEL BASE 5 15 = VAN WHEEL BASE 5 53 = 119 WB 13 = 119 WB 05 = CAB CHASSIS WHEEL BASE 5 03 = CAB CHASSIS WHEEL BASE 3	EG2 = 3.5L V6 Gas Engine EXM = 3.0L V6 Turbo Diesel Engine	DGZ = 5-Speed Auto W5A380 Transmission

Cargo Organizer, Cargo Retainers
Figure 50-275

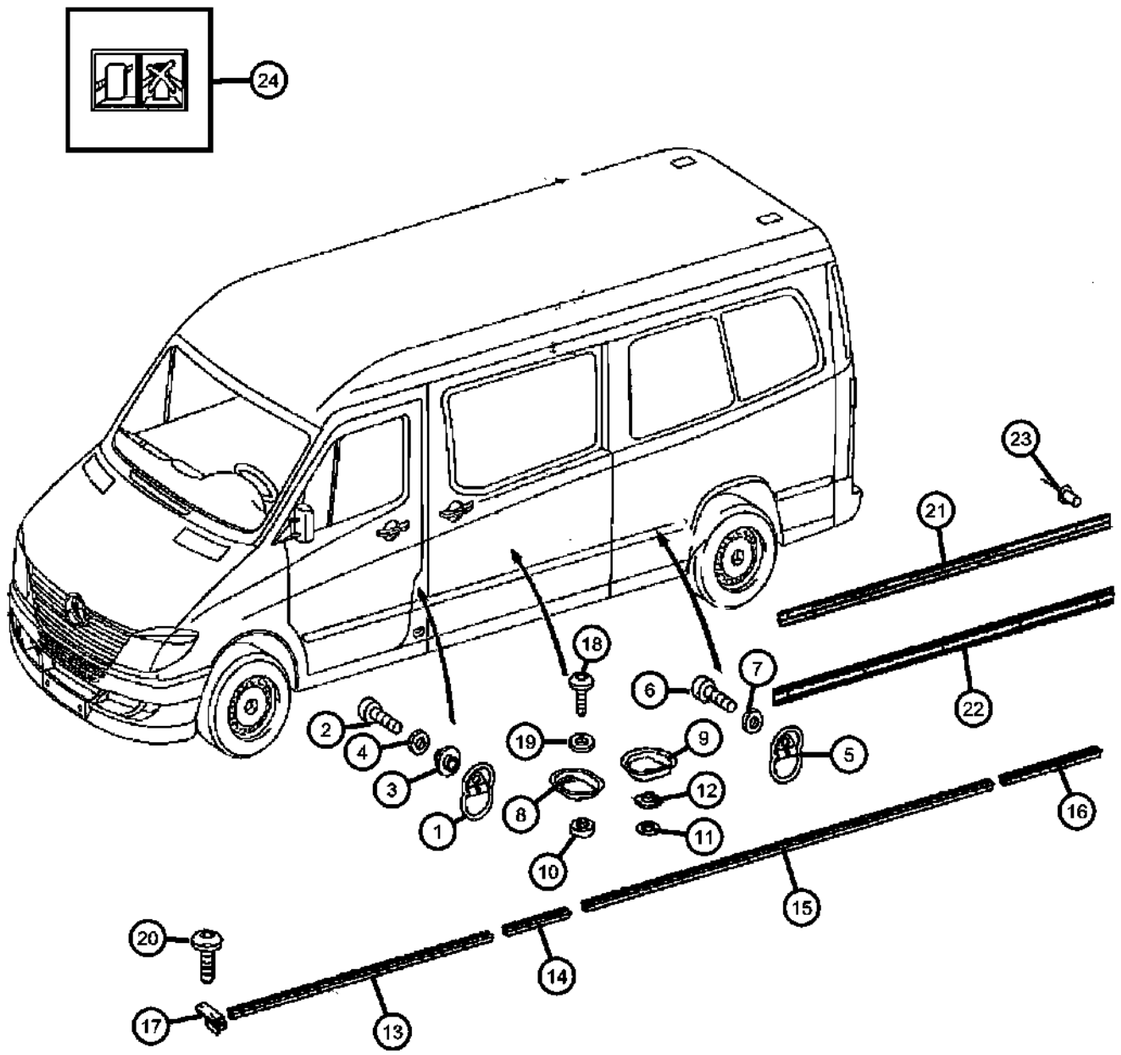

ITEM	PART NUMBER	QTY	LINE	SERIES	BODY	ENGINE	TRANS	TRIM	DESCRIPTION
	68015047AA	4	2, 6	L	13, 15, 17				
		8	3, 7	L	15				
		12	3, 7	L	17				
18									BOLT, Hex Head
	05103816AA	2	2, 3, 6, 7	L	13, 15, 17, 53, 55				
		14	3, 7	L	17				
19									WASHER
	05142916AA	6	2, 3, 6, 7	L	13, 15, 17, 53, 55				
		14	3, 7	L	17				
		12	2, 6	L	17				
20									SCREW
	06104496AA	2	3, 7	L	03, 05				
		2	2, 3, 6, 7	L	15, 17, 53, 55, 13				
21									RAIL
	68008778AA	2	2, 3, 6, 7	L	15, 17				Rear Top, Right & Left
		4	6, 7, 2, 3	L	13				Rear Top, Right & Left
22									RAIL
	68008784AA	2	2, 3, 6, 7	L	15, 17				Rear Bottom, Right & Left
		4	2, 3, 6, 7	L	13				Rear Bottom, Right & Left
	68008786AA	2	2, 3, 6, 7	L	15, 17				Central Bottom, Right & Left
23									RIVET
	05125821AA	4	2, 3, 6, 7	L	13, 15, 17, 53, 55				
		9	2, 3, 6, 7	L	17				
24	05124356AA	1	2, 3, 6, 7	L	13, 15, 17, 53, 55				LABEL

SPRINTER (VB)

SERIES	LINE	BODY	ENGINE	TRANSMISSION
L = LOWLINE	3 = HD DODGE 2WD 6 = Lt. Duty DODGE 4WD 2 = Med. Duty DODGE 2WD 7 = Med. Duty DODGE 4WD	17 = VAN WHEEL BASE 7 55 = WAGON WHEEL BASE 5 15 = VAN WHEEL BASE 5 53 = 119 WB 13 = 119 WB 05 = CAB CHASSIS WHEEL BASE 5 03 = CAB CHASSIS WHEEL BASE 3	EG2 = 3.5L V6 Gas Engine EXM = 3.0L V6 Turbo Diesel Engine	DGZ = 5-Speed Auto W5A380 Transmission

Cargo Organizer Partition Wall/Load Protection
Figure 50-280

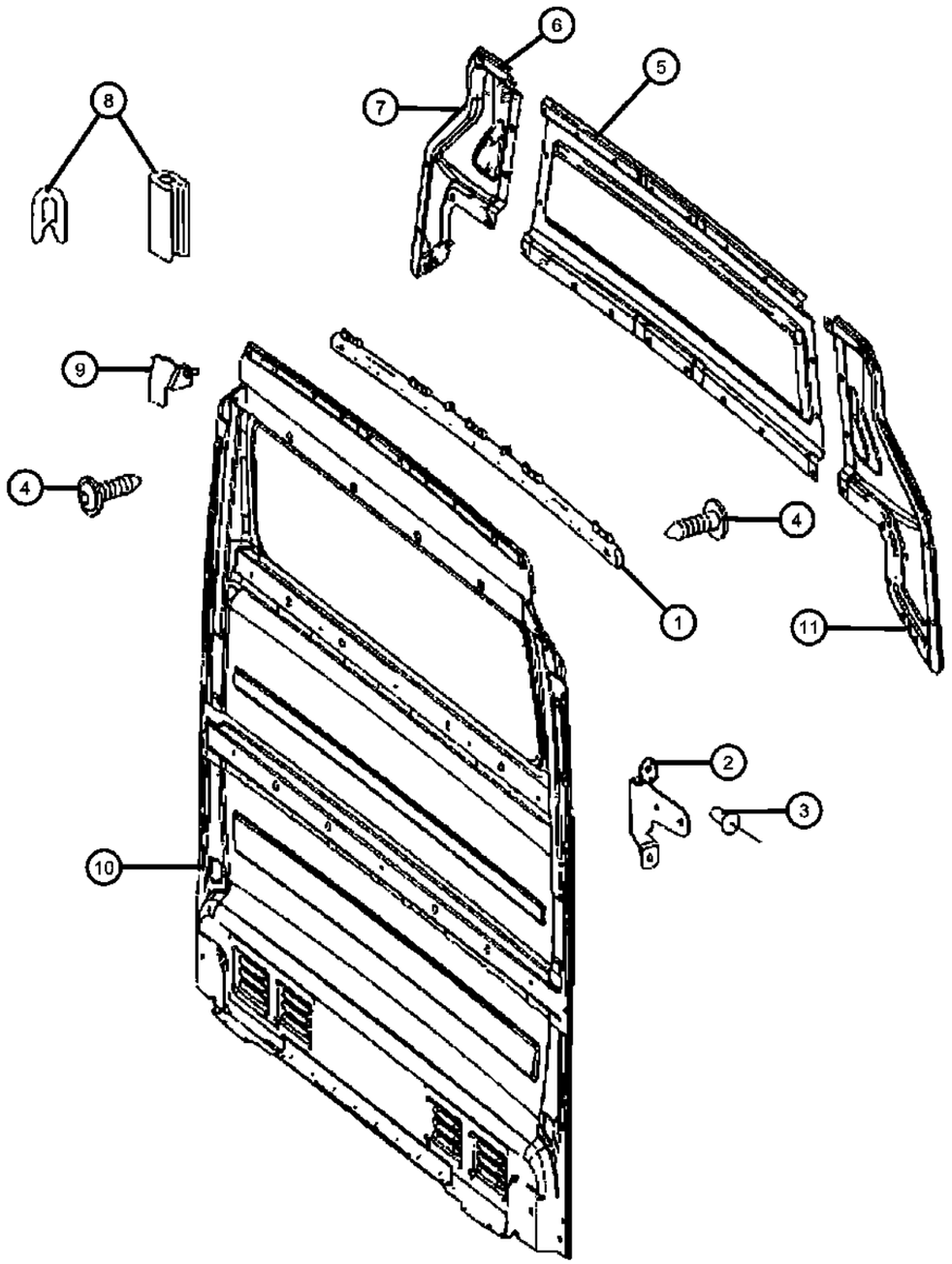

ITEM	PART NUMBER	QTY	LINE	SERIES	BODY	ENGINE	TRANS	TRIM	DESCRIPTION
1									REINFORCEMENT
	68009928AA	1	2, 3, 6, 7	L	13, 15, 17				
	68009929AA	1	3, 7	L	13, 15, 17				
2									BRACKET
	68009897AA	1	2, 3, 6, 7	L	13, 15, 17, 53, 55				Left
	68009898AA	1	2, 3, 6, 7	L	13, 15, 17, 53, 55				Right
3	05133554AA	16	2, 3, 6, 7	L	13, 15, 17, 53, 55				RIVET
4									SCREW
	68009926AA	5	2, 3, 6, 7	L	13, 15, 17				
		10	2, 3, 6, 7	L	13, 15, 17, 53, 55				
5	68009899AA	1	2, 6	L	13, 15, 17, 53, 55				COVER, Cargo Compartment, With [MWJ]
6									COVER, Cargo Compartment
	68009920AA	1	2, 6	L	13, 15, 17				Contains Inner 68009922aa
		1	3, 7	L	13, 15, 17, 53, 55				Contains Inner 68009922aa
	68009921AA	1	2, 6	L	13, 15, 17				Contains Inner 68009925aa
7									COVER, Cargo Compartment
	68009922AA	1	2, 3, 6, 7	L	53, 55, 57				
	68009925AA	1	3, 7	L	13, 15, 17				
8	05134108AA	2	2, 3, 6, 7	L	13, 15, 17, 53, 55				WEATHERSTRIP, Glass
9									BRACKET
	68009936AA	1	3, 7	L	13, 15, 17				Right
	68009937AA	1	3, 7	L	13, 15, 17				Left
10									PARTITION, Cargo
	68009882AA	1	2, 6	L	13, 15, 17				[-FF4+DS1]
	68009883AA	1	2, 6	L	13, 15, 17				[-FF4+DS0]
11									COVER, Cargo Compartment
	68009903AA	1	2, 3, 6, 7	L	13, 15, 17				
	68009911AA	1	2, 3, 6, 7	L	53, 55, 57				With [MWJ]

SPRINTER (VB)

SERIES	LINE	BODY	ENGINE	TRANSMISSION
L = LOWLINE	3 = HD DODGE 2WD 6 = Lt. Duty DODGE 4WD 2 = Med. Duty DODGE 2WD 7 = Med. Duty DODGE 4WD	17 = VAN WHEEL BASE 7 55 = WAGON WHEEL BASE 5 15 = VAN WHEEL BASE 5 53 = 119 WB 13 = 119 WB 05 = CAB CHASSIS WHEEL BASE 5 03 = CAB CHASSIS WHEEL BASE 3	EG2 = 3.5L V6 Gas Engine EXM = 3.0L V6 Turbo Diesel Engine	DGZ = 5-Speed Auto W5A380 Transmission

Cargo Organizer Partition Wall/Load Protection
Figure 50-280

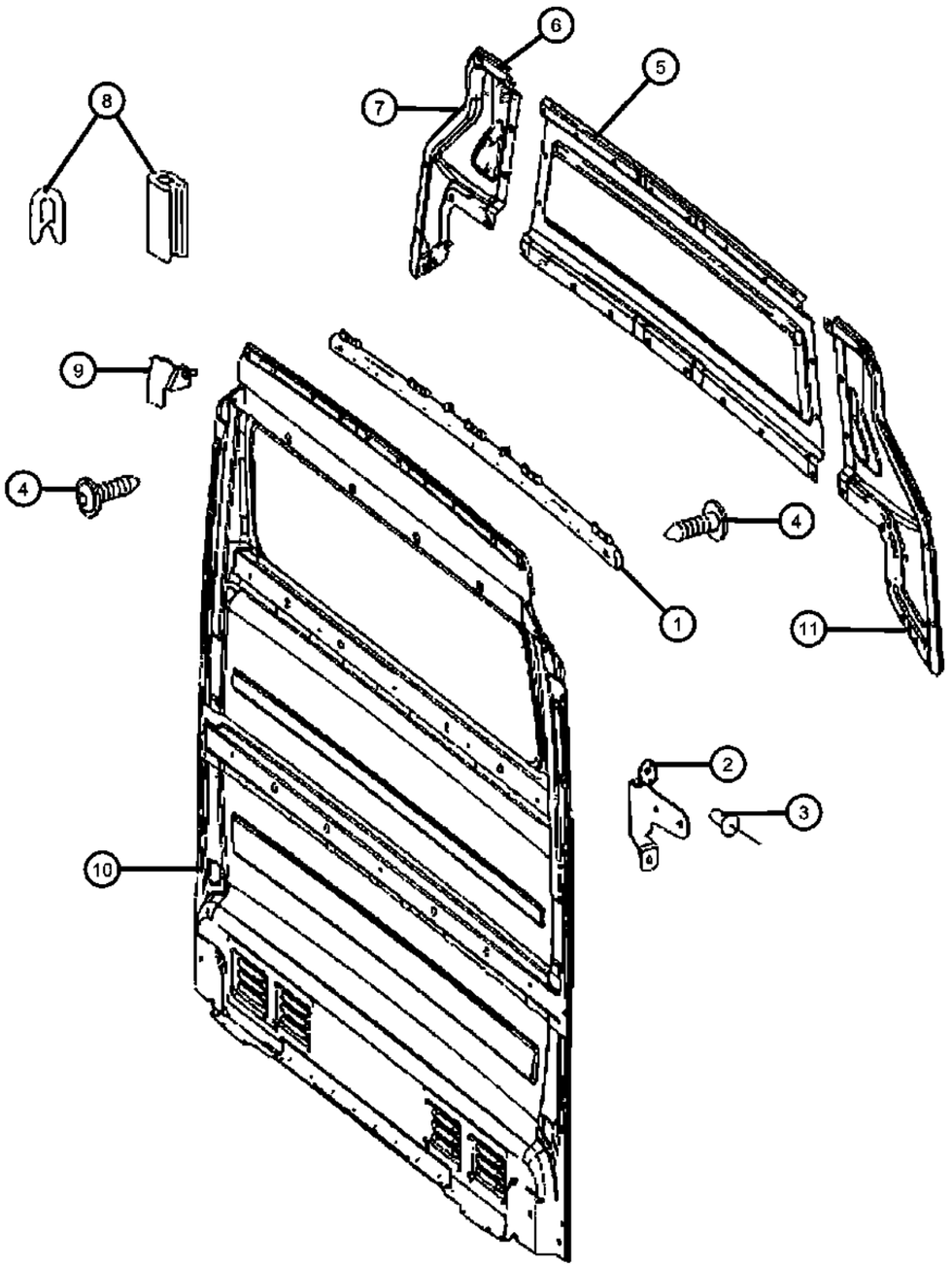

ITEM	PART NUMBER	QTY	LINE	SERIES	BODY	ENGINE	TRANS	TRIM	DESCRIPTION
	68009912AA	1	2, 6	L	13, 15, 17, 53, 55				With [MWJ + GKE]
	68009915AA	1	3, 7	L	13, 15, 17				With [MWJ + GKE]

SPRINTER (VB)

SERIES	LINE	BODY	ENGINE	TRANSMISSION
L = LOWLINE	3 = HD DODGE 2WD 6 = Lt. Duty DODGE 4WD 2 = Med. Duty DODGE 2WD 7 = Med. Duty DODGE 4WD	17 = VAN WHEEL BASE 7 55 = WAGON WHEEL BASE 5 15 = VAN WHEEL BASE 5 53 = 119 WB 13 = 119 WB 05 = CAB CHASSIS WHEEL BASE 5 03 = CAB CHASSIS WHEEL BASE 3	EG2 = 3.5L V6 Gas Engine EXM = 3.0L V6 Turbo Diesel Engine	DGZ = 5-Speed Auto W5A380 Transmission

Cargo Organizer Partition Wall with Sliding Door
Figure 50-285

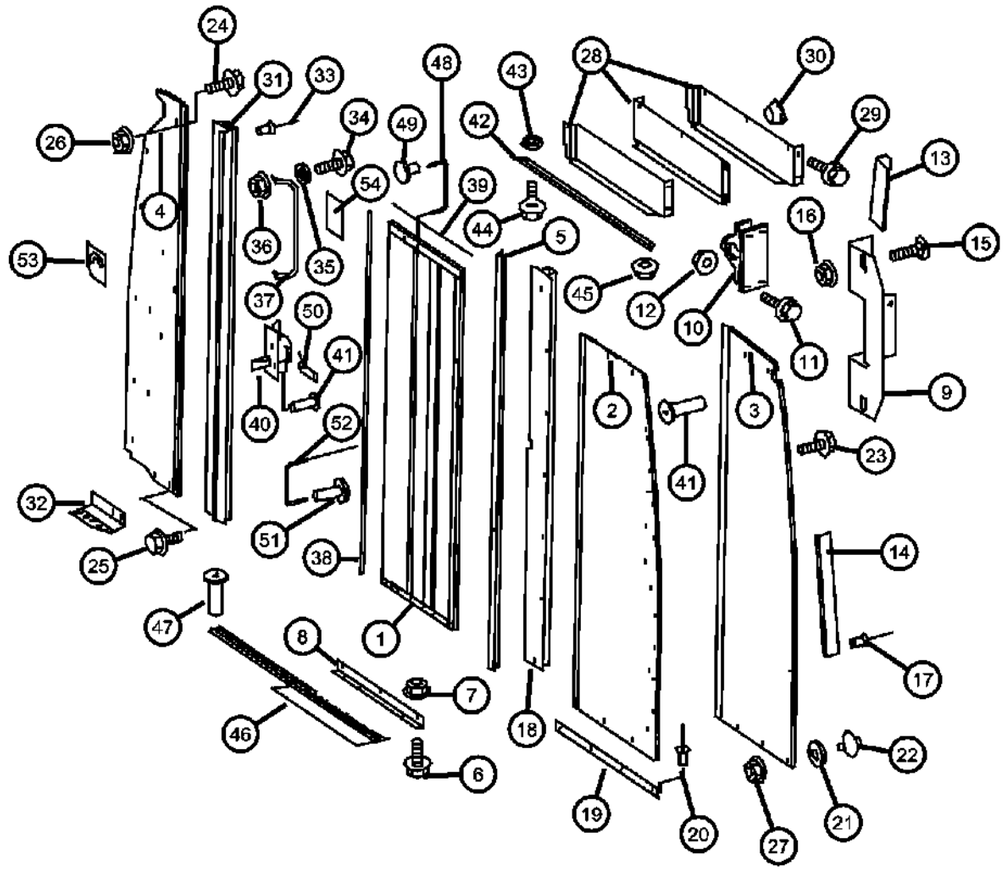

ITEM	PART NUMBER	QTY	LINE	SERIES	BODY	ENGINE	TRANS	TRIM	DESCRIPTION
NOTES: Sales Codes: [MWJ] = Roof - High [MX1] = Rof - Mega Painted Body Color [MX2] = Roof - White									
1	68015179AA	1	2, 3, 6, 7	L	13, 15, 17				DOOR
2	68015164AA	1	2, 3, 6, 7	L	13, 15, 17				PANEL, Cargo compartment
3	68015173AA	1	2, 3, 6, 7	L	13, 15, 17				PARTITION, Cargo
4	68015156AA	1	2, 3, 6, 7	L	13, 15, 17				PARTITION, Cargo
5	68015165AA	1	2, 3, 6, 7	L	13, 15, 17				RAIL
6	05137660AA	4	2, 3, 6, 7	L	13, 15, 17, 53, 55				SCREW
7	06104707AA	3	2, 3, 6, 7	L	13, 15, 17, 53, 55				NUT, M5
8	68015167AA	1	2, 3, 6, 7	L	13, 15, 17				BRACKET
9	05104305AA	1	2, 3, 6, 7	L	13, 15, 17, 53, 55				STOP
10	05104419AA	1	2, 3, 6, 7	L	13, 15, 17, 53, 55				ADJUSTER, Cargo Door
11	05104652AA	4	2, 3, 6, 7	L	13, 15, 17, 53, 55				SCREW
12	05104660AA	4	2, 3, 6, 7	L	13, 15, 17, 53, 55				NUT
13	05104427AA	2	6, 7, 2, 3	L	13, 15, 17, 53, 55				BUMPER, Rubber
14									RAIL
	68015168AA	1	2, 3, 6, 7	L	13, 15, 17				
	68015171AA	1	2, 3, 6, 7	L	13, 15, 17				Without [MWJ] or [MX2] or [MX1]
15	05126132AA	2	2, 3, 6, 7	L	13, 15, 17, 53, 55				BOLT, Hex Head
16	06105169AA	4	2, 3, 6, 7	L					NUT
17	68015172AA	10	2, 3, 6, 7	L	13, 15, 17				RIVET
18									RAIL, Cargo Compartment
	68015175AA	1	2, 3, 6, 7	L	13, 15, 17				With [MWJ] or [MX2] or [MX1]
	68015176AA	1	2, 3, 6, 7	L	13, 15, 17				
19	68015177AA	1	2, 3, 6, 7	L	13, 15, 17				BRACKET
20	05125812AA	8	2, 3, 6, 7	L	13, 15, 17, 53, 55				RIVET
21	68013678AA	2	2, 3, 6, 7	L					WASHER

SPRINTER (VB)

SERIES	LINE	BODY	ENGINE	TRANSMISSION
L = LOWLINE	3 = HD DODGE 2WD 6 = Lt. Duty DODGE 4WD 2 = Med. Duty DODGE 2WD 7 = Med. Duty DODGE 4WD	17 = VAN WHEEL BASE 7 55 = WAGON WHEEL BASE 5 15 = VAN WHEEL BASE 5 53 = 119 WB 13 = 119 WB 05 = CAB CHASSIS WHEEL BASE 5 03 = CAB CHASSIS WHEEL BASE 3	EG2 = 3.5L V6 Gas Engine EXM = 3.0L V6 Turbo Diesel Engine	DGZ = 5-Speed Auto W5A380 Transmission

Cargo Organizer Partition Wall with Sliding Door
Figure 50-285

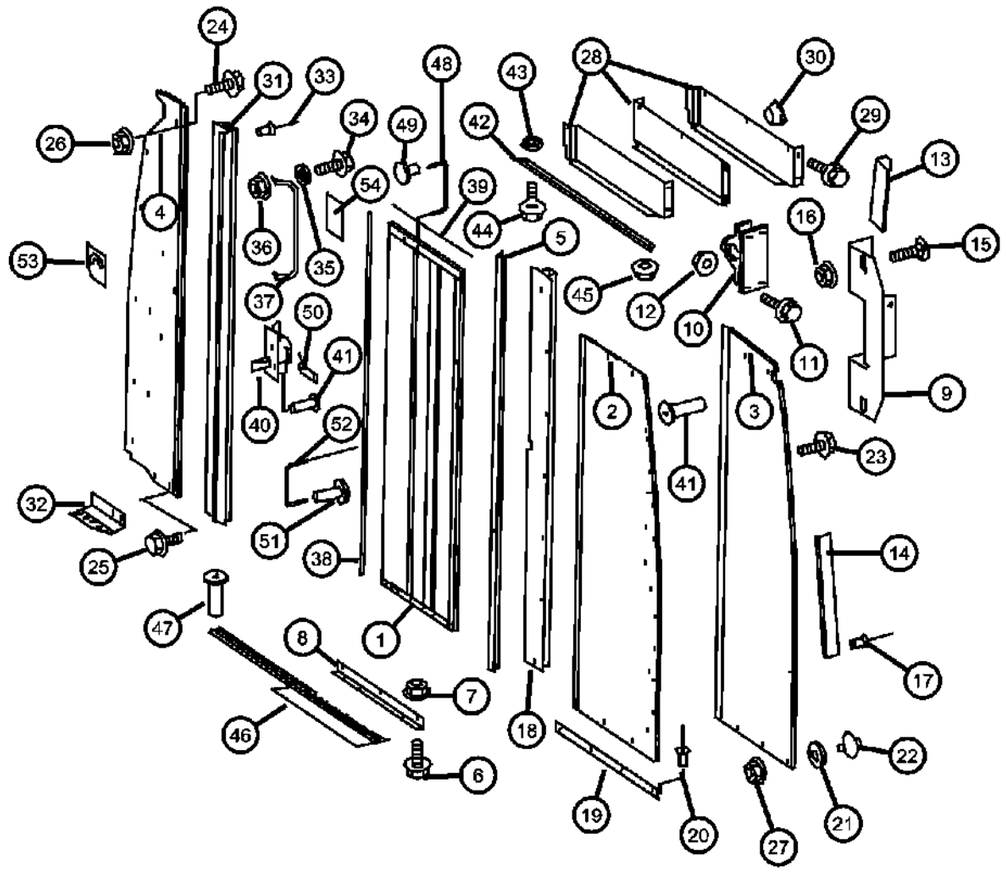

ITEM	PART NUMBER	QTY	LINE	SERIES	BODY	ENGINE	TRANS	TRIM	DESCRIPTION
22	68015161AA	3	2, 3, 6, 7	L	13, 15, 17				SCREW
23	68015161AA	3	2, 3, 6, 7	L	13, 15, 17				SCREW
24	05137660AA	4	2, 3, 6, 7	L	13, 15, 17, 53, 55				SCREW
25	06104709AA	2	2, 3, 6, 7	L	13, 15, 17, 53, 55				NUT, Hex Flange, M8x1.25
26	68015178AA	5	7, 2, 3, 6	L	13, 15, 17				SCREW
27	06104707AA	1	2, 3, 6, 7	L	13, 15, 17, 53, 55				NUT, M5
28	68015208AA	1	2, 3, 6, 7	L	13, 15, 17				PANEL
29	05125748AA	3	2, 3, 6, 7	L	13, 15, 17, 53, 55				SCREW, Exhaust Bracket Mounting
30	05096373AB	3	2, 3, 6, 7	L	13, 15, 17, 53, 55				PLUG
31	68015157AA	1	2, 3, 6, 7	L	13, 15, 17				RAIL, Cargo Compartment, With [MWJ] or [MX2] or [MX1]
32	68015159AA	1	2, 3, 6, 7	L	13, 15, 17				BRACKET
33	05125812AA	5	2, 3, 6, 7	L	13, 15, 17, 53, 55				RIVET
34	05096986AA	4	2, 3, 6, 7	L					BOLT
35	05142916AA	6	2, 3, 6, 7	L	13, 15, 17, 53, 55				WASHER
36	06104709AA	2	2, 3, 6, 7	L	13, 15, 17, 53, 55				NUT, Hex Flange, M8x1.25
37	05132107AA	2	2, 3, 6, 7	L					HANDLE, Door Pull
38	68015160AA	1	2, 3, 6, 7	L	13, 15, 17				SEAL
39	68030733AA	1	2, 3, 6, 7	L	13, 15, 17				EDGE GUARD SECTION, NONE, SPRINTER
40	68015162AA	1	2, 3, 6, 7	L	13, 15, 17				LOCK, Door
41	05104623AA	8	2, 3, 6, 7	L	13, 15, 17, 53, 55				RIVET
42	68015181AA	1	2, 3, 6, 7	L	13, 15, 17				RAIL
43	05126208AA	4	2, 3, 6, 7	L	13, 15, 17, 53, 55				NUT, Hex
44	05125721AA	2	2, 3, 6, 7	L	13, 15, 17, 53, 55				BOLT
45	06104707AA	1	2, 3, 6, 7	L	13, 15, 17, 53, 55				NUT, M5
46	68015183AA	1	2, 3, 6, 7	L	15, 17, 13				PLATE, Scuff

SPRINTER (VB)

SERIES	LINE	BODY	ENGINE	TRANSMISSION
L = LOWLINE	3 = HD DODGE 2WD 6 = Lt. Duty DODGE 4WD 2 = Med. Duty DODGE 2WD 7 = Med. Duty DODGE 4WD	17 = VAN WHEEL BASE 7 55 = WAGON WHEEL BASE 5 15 = VAN WHEEL BASE 5 53 = 119 WB 13 = 119 WB 05 = CAB CHASSIS WHEEL BASE 5 03 = CAB CHASSIS WHEEL BASE 3	EG2 = 3.5L V6 Gas Engine EXM = 3.0L V6 Turbo Diesel Engine	DGZ = 5-Speed Auto W5A380 Transmission

Cargo Organizer Partition Wall with Sliding Door
Figure 50-285

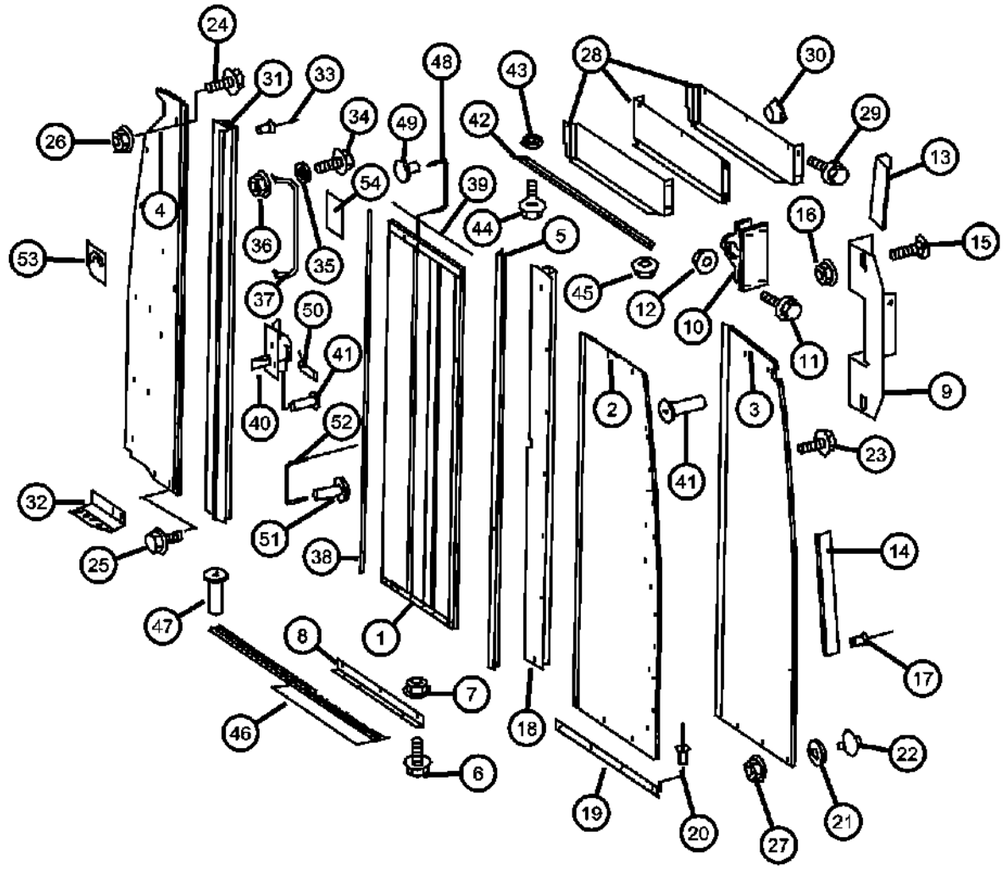

ITEM	PART NUMBER	QTY	LINE	SERIES	BODY	ENGINE	TRANS	TRIM	DESCRIPTION
47	05104623AA	4	2, 3, 6, 7	L	13, 15, 17, 53, 55				RIVET
48	68015185AA	1	2, 3, 6, 7	L	15, 17, 13				HANDLE, Cargo Door Interior
49	06104119AA	4	2, 3, 6, 7	L	13, 15, 17				SCREW
50	68015184AA	1	2, 3, 6, 7	L	13, 15, 17				LATCH
51	06104121AA	4	2, 3, 6, 7	L	13, 15, 17, 53, 55				SCREW, Hex Flange Head
52	05123663AA	1	2, 3, 6, 7	L	13, 15, 17				HANDLE, Cargo Door Interior
53	05121146AA	1	2, 3, 6, 7	L	13, 15, 17, 53, 55				LABEL
54	05121162AA	1	2, 3, 6, 7	L	13, 15, 17, 53, 55				LABEL, Warning

SPRINTER (VB)

SERIES	LINE	BODY	ENGINE	TRANSMISSION
L = LOWLINE	3 = HD DODGE 2WD 6 = Lt. Duty DODGE 4WD 2 = Med. Duty DODGE 2WD 7 = Med. Duty DODGE 4WD	17 = VAN WHEEL BASE 7 55 = WAGON WHEEL BASE 5 15 = VAN WHEEL BASE 5 53 = 119 WB 13 = 119 WB 05 = CAB CHASSIS WHEEL BASE 5 03 = CAB CHASSIS WHEEL BASE 3	EG2 = 3.5L V6 Gas Engine EXM = 3.0L V6 Turbo Diesel Engine	DGZ = 5-Speed Auto W5A380 Transmission

Foot Rest
Figure 50-345

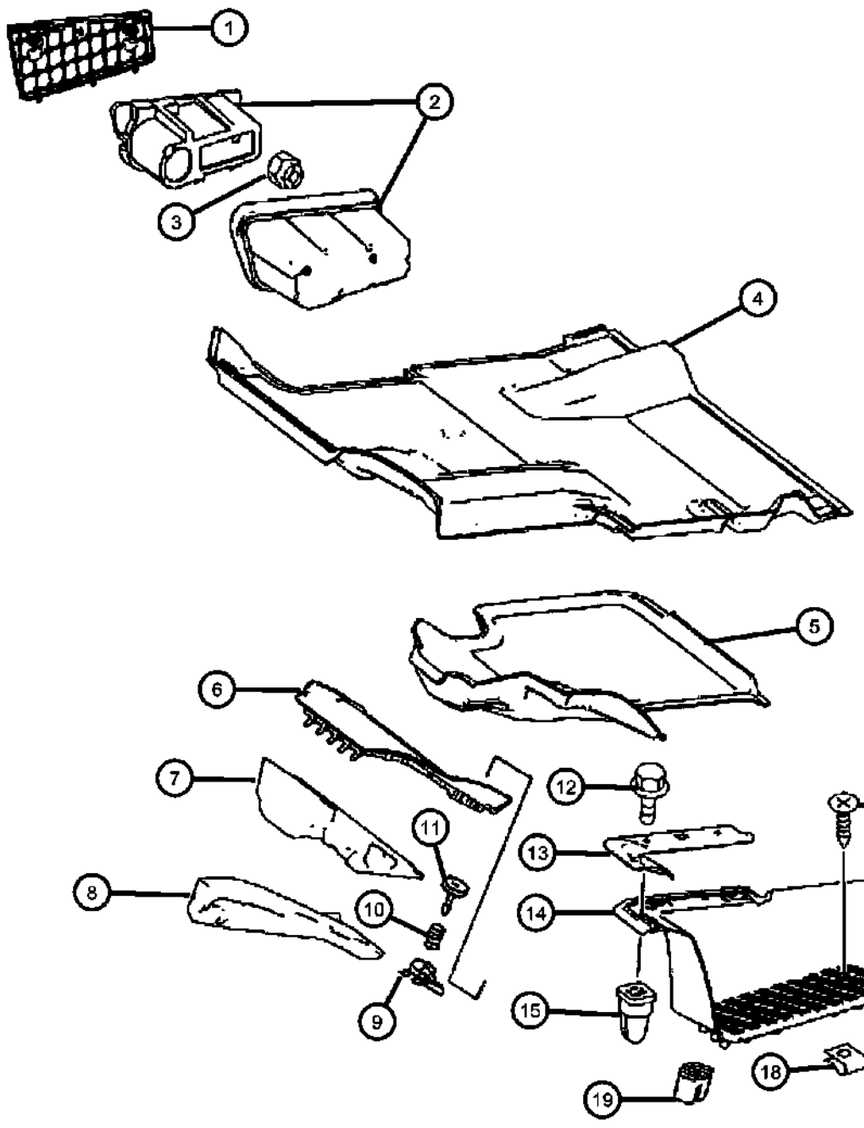

ITEM	PART NUMBER	QTY	LINE	SERIES	BODY	ENGINE	TRANS	TRIM	DESCRIPTION
NOTES: Sales Codes: [CD2] = Delete Passenger Seat Riser [CK8] = Delete Front Floor Mat/Carpet [CWC] = Full Width Cargo Divider [CW9] = Dual Passenger Seat [XGR] = Rear Seat Heat Ducts [XJW] = Cargo Partition w/Window [XJ1] = Cargo Partition w/Sliding Window									
1									COVER
	1HB30XDVAA	1	2, 3, 6, 7	L				*A6	
		1	2, 3, 6, 7	L				*E7	
		1	2, 3, 6, 7	L				*F7	
2									BIN, Storage
	1HB32XDVAA	1	2, 3, 6, 7	L				*A6	
		1	2, 3, 6, 7	L				*E7	
		1	2, 3, 6, 7	L				*F7	
3	05096978AA	6	2, 3, 6, 7	L	13, 15, 17, 53, 55				NUT, Hex, M6
4									CARPET, Floor
	1HB14BDVAA	1	2, 3, 6, 7	L	53, 55			*A6	[A6] With [XGR][CW9] or [XJW] or [XJ1] without [CD2] or [CX8]
		1	7, 2, 3, 6	L	53, 55			*E7	[E7] With [XGR][CW9] or [XJW] or [XJ1] without [CD2] or [CX8]
		1	2, 3, 6, 7	L	53, 55			*F7	[F7] With [XGR][CW9] or [XJW] or [XJ1] without [CD2] or [CX8]
	1HB15BDVAA	1	2, 3, 6, 7	L	13, 15, 17			*A6	[A6] With [CWC] or [XJW] or [XJ1] without [CD2] or [CW9] or [XGR]
		1	2, 3, 6, 7	L	13, 15, 17			*E7	[E7] With [CWC] or [XJW] or [XJ1] without [CD2] or [CW9] or [XGR]
		1	2, 3, 6, 7	L	13, 15, 17			*F7	[F7] With [CWC] or [XJW] or [XJ1] without [CD2] or [CW9] or [XGR]
	1HB16BDVAA	1	2, 3, 6, 7	L	13, 15, 17			*AL	[AL] With [CW9] and [CWC] or [XJW] or [XJ1] without [XJR]
		1	3, 6, 7, 2	L	13, 15, 17			*E7	[E7] With [CW9] and [CWC] or [XJW] or [XJ1] without [XJR]
		1	2, 3, 6, 7	L	13, 15, 17			*F7	[F7] With [CW9] and [CWC] or [XJW] or [XJ1] without [XJR]

SPRINTER (VB)

SERIES	LINE	BODY	ENGINE	TRANSMISSION
L = LOWLINE	3 = HD DODGE 2WD 6 = Lt. Duty DODGE 4WD 2 = Med. Duty DODGE 2WD 7 = Med. Duty DODGE 4WD	17 = VAN WHEEL BASE 7 55 = WAGON WHEEL BASE 5 15 = VAN WHEEL BASE 5 53 = 119 WB 13 = 119 WB 05 = CAB CHASSIS WHEEL BASE 5 03 = CAB CHASSIS WHEEL BASE 3	EG2 = 3.5L V6 Gas Engine EXM = 3.0L V6 Turbo Diesel Engine	DGZ = 5-Speed Auto W5A380 Transmission

Foot Rest
Figure 50-345

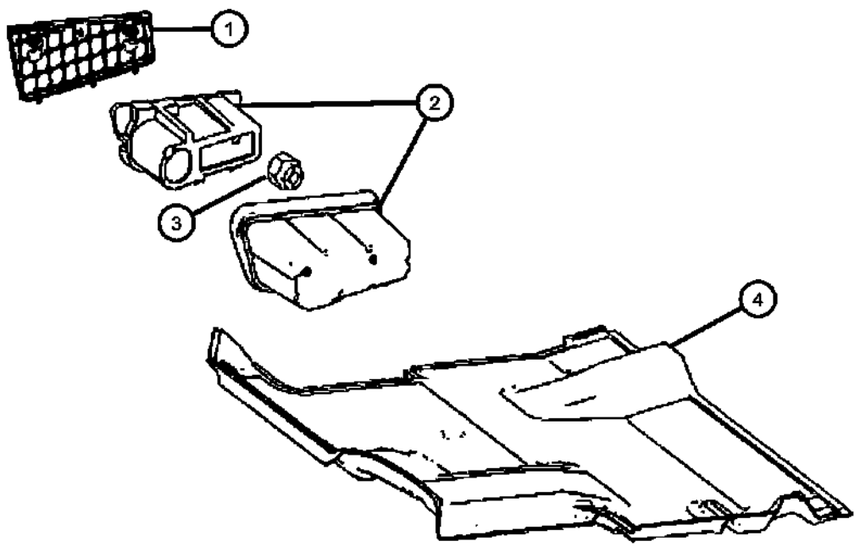

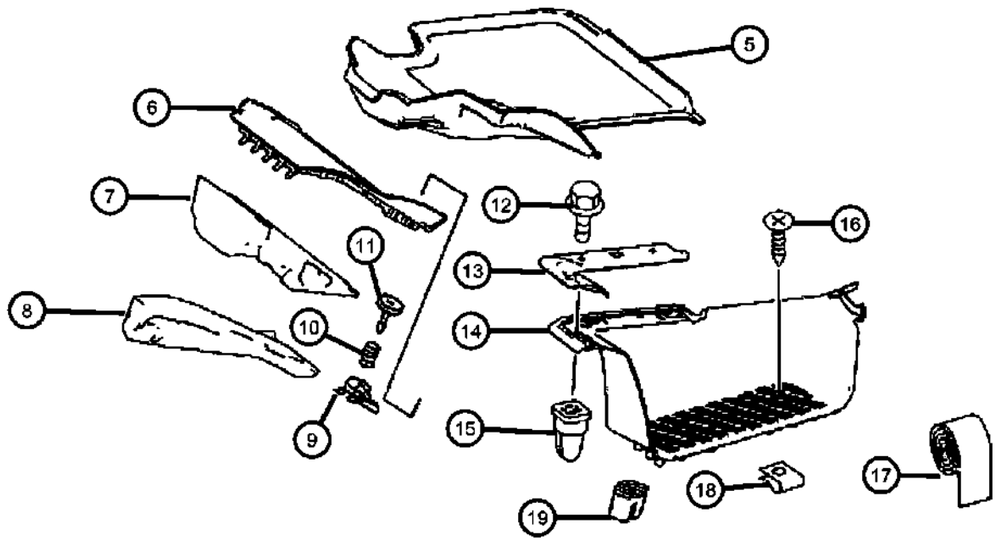

ITEM	PART NUMBER	QTY	LINE	SERIES	BODY	ENGINE	TRANS	TRIM	DESCRIPTION
	1HB17BDVAA	1	2, 3, 6, 7	L	13, 15, 17, 53, 55			*AL	[AL] With [XGR] without [CX9] or [CD2] or [CK8]
		1	2, 3, 6, 7	L	13, 15, 17, 53, 55			*E7	[E7] With [XGR] without [CX9] or [CD2] or [CK8]
		1	2, 3, 6, 7	L	13, 15, 17, 53, 55			*F7	[F7] With [XGR] without [CX9] or [CD2] or [CK8]
	1HB18BDVAA	1	2, 3, 6, 7	L	13, 15, 17			*A6	[AL] Without [CD2] or [CW9] or [XGR]
		1	2, 3, 6, 7	L	13, 15, 17			*E7	[E7] Without [CD2] or [CW9] or [XGR]
		1	2, 3, 6, 7	L	13, 15, 17			*F7	[F7] Without [CD2] or [CW9] or [XGR]
	1HB22BDVAA	1	2, 3, 6, 7	L	13, 15, 17, 53, 55			*AL	[AL] With [CW9] without [CK8] or [CWC] or [XJW] or [XJ1]
		1	2, 3, 6, 7	L	13, 15, 17, 53, 55			*E7	[E7] With [CW9] without [CK8] or [CWC] or [XJW] or [XJ1]
		1	2, 3, 6, 7	L	13, 15, 17, 53, 55			*F7	[F7] With [CW9] without [CK8] or [CWC] or [XJW] or [XJ1]
5									CARPET, Floor
	1HB21BDVAA	1	2, 3, 6, 7	L	13, 15, 17, 53, 55			*AL	[AL]
		1	2, 3, 6, 7	L	13, 15, 17, 53, 55			*E7	[E7]
		1	2, 3, 6, 7	L	13, 15, 17, 53, 55			*F7	[F7]
6									COVER
	1HB25XDVAA	1	2, 3, 6, 7	L				*A6	
		1	2, 3, 6, 7	L				*E7	
		1	2, 3, 6, 7	L				*F7	
7	68010621AA	1	2, 3, 6, 7	L					SUPPORT, Footrest
8	68010623AA	1	2, 3, 6, 7	L					FOOTREST
9									CLIP
	05125587AA	1	3, 7	L	03, 05				
		1	2, 3, 6, 7	L	13, 15, 17, 53, 55				
10									SPRING
	05125845AA	1	7, 3	L	03, 05				
		1	2, 3, 6, 7	L	13, 15, 17, 53, 55				

SPRINTER (VB)

SERIES	LINE	BODY	ENGINE	TRANSMISSION
L = LOWLINE	3 = HD DODGE 2WD 6 = Lt. Duty DODGE 4WD 2 = Med. Duty DODGE 2WD 7 = Med. Duty DODGE 4WD	17 = VAN WHEEL BASE 7 55 = WAGON WHEEL BASE 5 15 = VAN WHEEL BASE 5 53 = 119 WB 13 = 119 WB 05 = CAB CHASSIS WHEEL BASE 5 03 = CAB CHASSIS WHEEL BASE 3	EG2 = 3.5L V6 Gas Engine EXM = 3.0L V6 Turbo Diesel Engine	DGZ = 5-Speed Auto W5A380 Transmission

Foot Rest
Figure 50-345

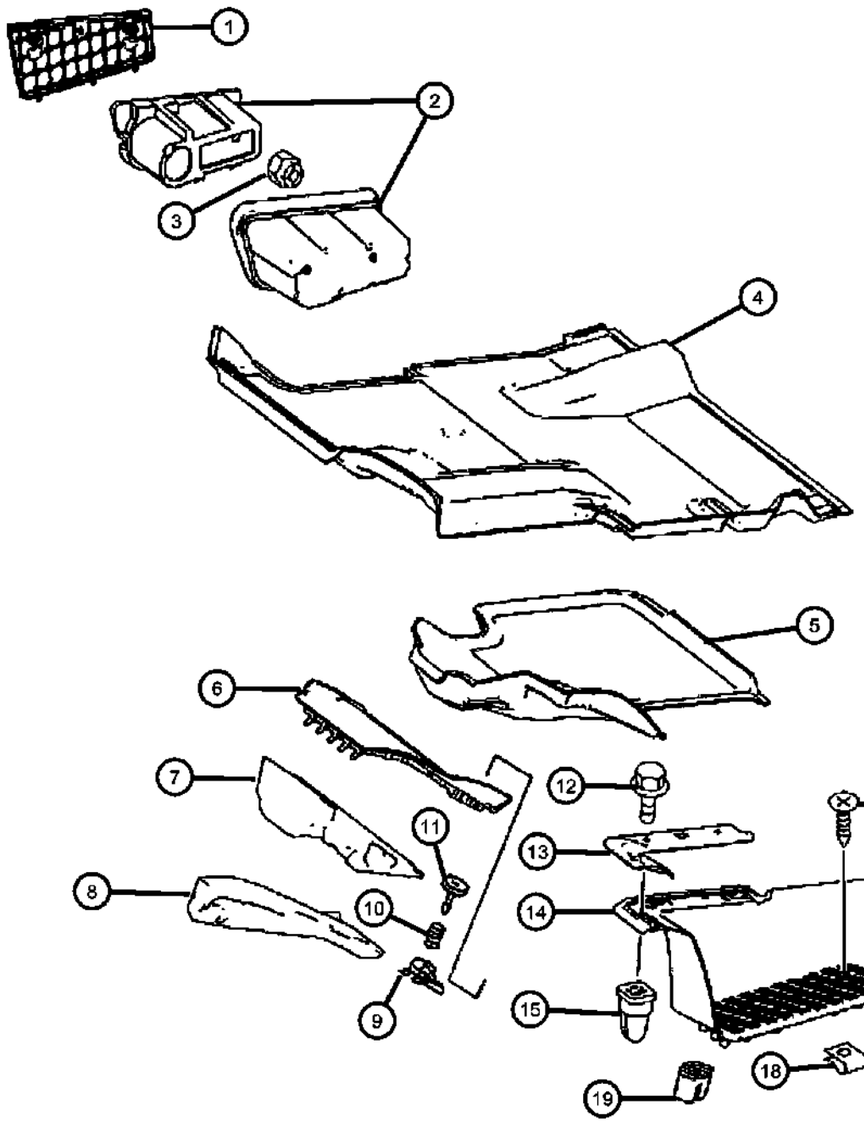

ITEM	PART NUMBER	QTY	LINE	SERIES	BODY	ENGINE	TRANS	TRIM	DESCRIPTION
11									FASTENER
	05122665AA	1	2, 3, 6, 7	L	13, 15, 17, 53, 55			*A6	
		1	2, 3, 6, 7	L	13, 15, 17, 53, 55			*E7	
		1	2, 3, 6, 7	L	13, 15, 17, 53, 55			*F7	
		1	3, 7	L	03, 05			*A6	
		1	3, 7	L	03, 05			*E7	
		1	3, 7	L	03, 05			*F7	
12	68004673AA	2	2, 3, 6, 7	L					SCREW
13									COVER
	1HB29XDVAA	1	2, 3, 6, 7	L				*A6	Left
		1	2, 3, 6, 7	L				*E7	Left
		1	2, 3, 6, 7	L				*F7	Left
	1HB31XDVAA	1	2, 3, 6, 7	L				*A6	Right
		1	2, 3, 6, 7	L				*E7	Right
		1	2, 3, 6, 7	L				*F7	Right
14									PLATE, Scuff
	1HB26XDVAA	1	2, 3, 6, 7	L				*A6	Left
		1	6, 7, 2, 3	L				*E7	Left
		1	2, 3, 6, 7	L				*F7	Left
	1HB27XDVAA	1	2, 3, 6, 7	L				*A6	Right
		1	2, 3, 6, 7	L				*E7	Right
		1	2, 3, 6, 7	L				*F7	Right
15	05098837AB	4	2, 3, 6, 7	L					NUT, Plastic Snap-in
16	06104575AA	1	2, 3, 6, 7	L					SCREW, Tapping, M4.8X1.6X19.0
17	68009864AA	AR	2, 3, 6, 7	L					TAPE
18	06104736AA	6	2, 3, 6, 7	L					NUT, Clip-On
19									PLUG
	1HB28XDVAA	6	2, 3, 6, 7	L				*A6	
		6	2, 3, 6, 7	L				*E7	
		6	2, 3, 6, 7	L				*F7	

SPRINTER (VB)

SERIES	LINE	BODY	ENGINE	TRANSMISSION
L = LOWLINE	3 = HD DODGE 2WD 6 = Lt. Duty DODGE 4WD 2 = Med. Duty DODGE 2WD 7 = Med. Duty DODGE 4WD	17 = VAN WHEEL BASE 7 55 = WAGON WHEEL BASE 5 15 = VAN WHEEL BASE 5 53 = 119 WB 13 = 119 WB 05 = CAB CHASSIS WHEEL BASE 5 03 = CAB CHASSIS WHEEL BASE 3	EG2 = 3.5L V6 Gas Engine EXM = 3.0L V6 Turbo Diesel Engine	DGZ = 5-Speed Auto W5A380 Transmission

AR = use ase required - = Non illustrrated part

<< RETURN TO GROUP INDEX

Load Floor Cargo
Figure 50-355

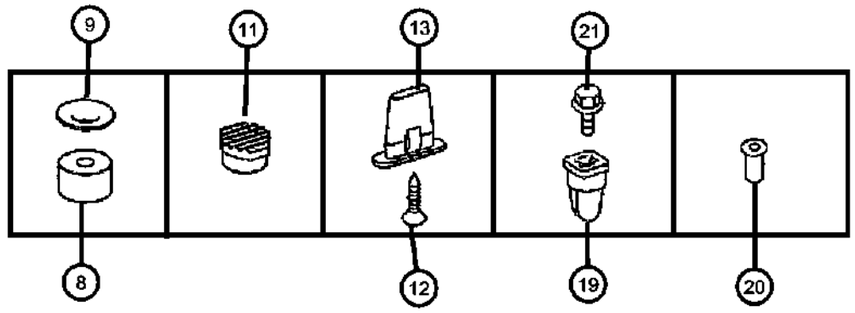

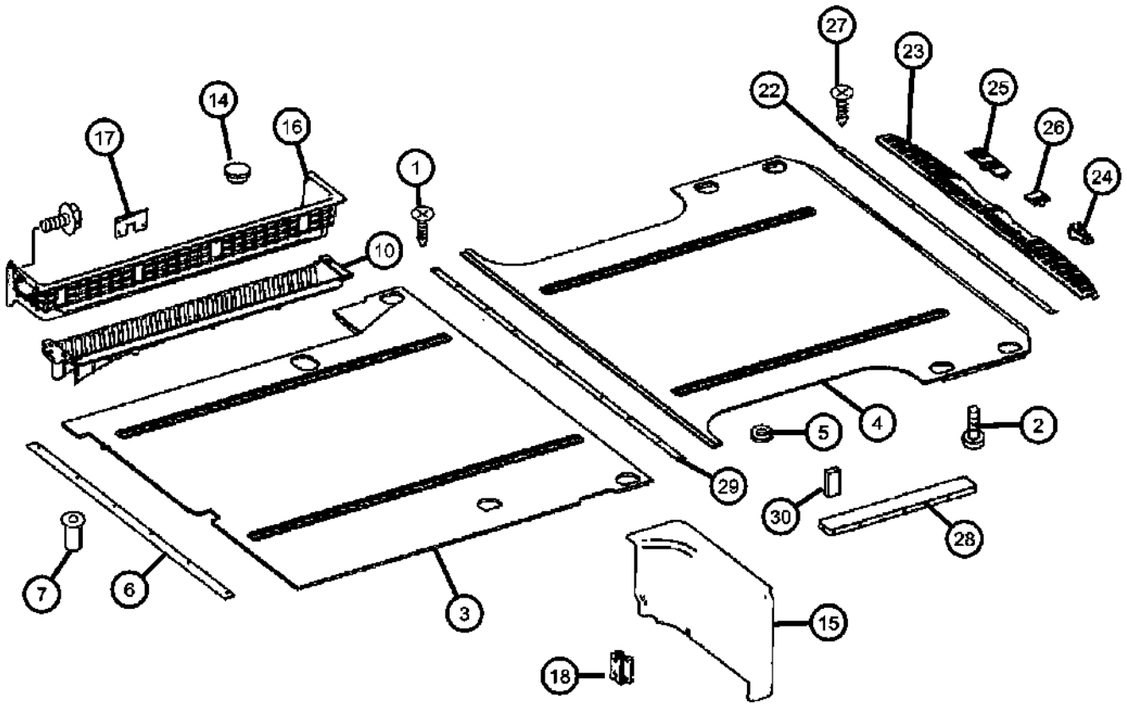

ITEM	PART NUMBER	QTY	LINE	SERIES	BODY	ENGINE	TRANS	TRIM	DESCRIPTION
1	68010627AA	1	2, 3, 6, 7	L	13, 15, 17, 53, 55				SCREW
2	68010736AA	2	2, 3, 6, 7	L	55, 13, 15, 17, 53				SCREW
3									FLOOR, Wooden
	68010670AA	1	2, 6	L	13, 15, 17, 53, 55				With [GKA] Right Sliding Door,With [XJY]Cargo Partition w/Sliding Door, With [CW1] Rear Cargo Tie Down Rain System
		1	3, 7	L	15, 17, 55				With [GKA] Right Sliding Door,With [XJY]Cargo Partition w/Sliding Door, With [CW1] Rear Cargo Tie Down Rain System
	68010675AA	1	2, 6	L	13, 15, 17, 53, 55				With [GKE] Left Sliding Door, No Glass,With [GK9] Without Right Sliding Door, With [XJY]Cargo Partition With Sliding Door, With [CW1] Rear Cargo Tie Down Rail System
		1	3, 7	L	17, 55, 15				With [GKE] Left Sliding Door, No Glass,With [GK9] Without Right Sliding Door, With [XJY]Cargo Partition With Sliding Door, With [CW1] Rear Cargo Tie Down Rail System
	68010679AA	1	2, 6	L	13, 15, 17, 53, 55				With [HDC] Rear Auxiliary Heater, With or Without Right and Left Sliding Door,
		1	3, 7	L	15, 17, 55				With [HDC] Rear Auxiliary Heater, With or Without Right and Left Sliding Door,
	68010686AA	1	3, 7	L	13, 53				With [5CF] 144‘ WB,With [XJY]Cargo Partition w/Sliding Door,With [HDC]Rear Auxilary Heater,With [GKE]Left Sliding Door ,No Glass
4									FLOOR, Wooden
	68010704AA	1	3, 7	L	15, 55				With [CW1] Rear Cargo Tie Down Rain System
	68010708AA	1	2, 6	L	15, 55				With [CW1] Rear Cargo Tie Down Rain System
	68010725AA	1	3, 7	L	17				With [CW1] Rear Cargo Tie Down Rain System
	68010728AA	1	2, 6	L	17				With [CW1] Rear Cargo Tie Down Rain System

SPRINTER (VB)

SERIES	LINE	BODY	ENGINE	TRANSMISSION
L = LOWLINE	3 = HD DODGE 2WD 6 = Lt. Duty DODGE 4WD 2 = Med. Duty DODGE 2WD 7 = Med. Duty DODGE 4WD	17 = VAN WHEEL BASE 7 55 = WAGON WHEEL BASE 5 15 = VAN WHEEL BASE 5 53 = 119 WB 13 = 119 WB 05 = CAB CHASSIS WHEEL BASE 5 03 = CAB CHASSIS WHEEL BASE 3	EG2 = 3.5L V6 Gas Engine EXM = 3.0L V6 Turbo Diesel Engine	DGZ = 5-Speed Auto W5A380 Transmission

Load Floor Cargo
Figure 50-355

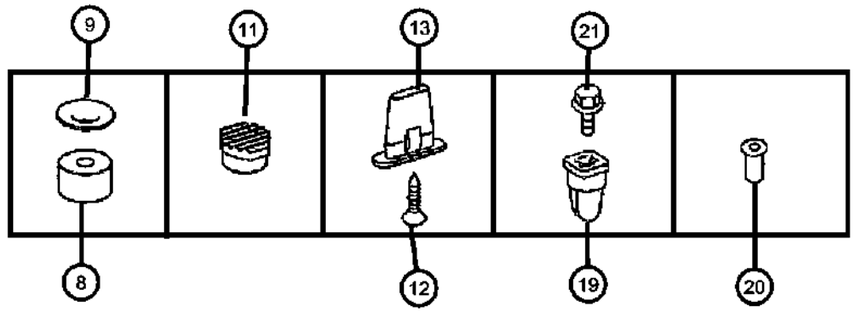

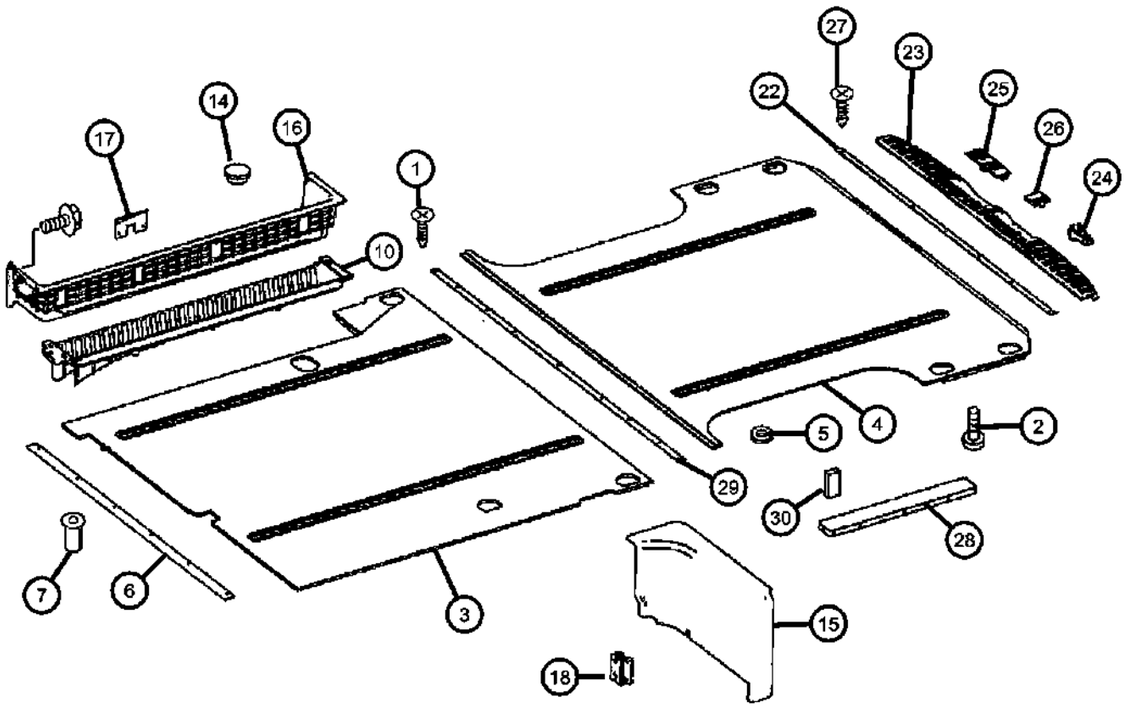

ITEM	PART NUMBER	QTY	LINE	SERIES	BODY	ENGINE	TRANS	TRIM	DESCRIPTION
5									WASHER
	68010654AA	20	2, 6	L	13, 53				
		20	3, 7	L	13, 53				
		24	2, 6	L	15, 55				
		24	3, 7	L	15, 55				
		26	2, 6	L	17				
		28	7, 3	L	17				
6									MOLDING, Cargo Area Carpet
	68010733AA	1	2, 3, 6, 7	L	13, 15, 17, 53, 55				
	68010734AA	1	2, 3, 6, 7	L	13, 15, 17, 53, 55				With [GKA] Right Sliding Door, With [GKE] Left Sliding Door, No Glass
	68010735AA	1	2, 3, 6, 7	L	13, 15, 17, 53, 55				With [GK9] Without Right Sliding Door
7									NUTSERT, Rivet
	06105175AA	2	2, 3, 6, 7	L	13, 15, 17, 53, 55				
		2	3, 7	L	03, 05				
		3	3, 7	L	13, 15, 17, 53, 55				
8	68010737AA	2	2, 3, 6, 7	L	15, 17, 53, 55, 13				BUSHING
9	68010738AA	2	2, 3, 6, 7	L	13, 15, 17, 53, 55				COVER
10									STEP PAD, Side Step
	1HB33DX8AA	1	2, 3, 6, 7	L	13, 15, 17, 53, 55			*A6	[A6], Left
		1	2, 3, 6, 7	L	13, 15, 17, 53, 55			*E7	[E7], Left
		1	2, 3, 6, 7	L	13, 15, 17, 53, 55			*F7	[F7], Left
	1HB36DX8AA	1	2, 3, 6, 7	L	13, 15, 17, 53, 55			*A6	[A6], Right
		1	2, 3, 6, 7	L	13, 15, 17, 53, 55			*E7	[E7], Right
		1	2, 3, 6, 7	L	13, 15, 17, 53, 55			*F7	[F7], Right
11									PLUG

SPRINTER (VB)

SERIES	LINE	BODY	ENGINE	TRANSMISSION
L = LOWLINE	3 = HD DODGE 2WD 6 = Lt. Duty DODGE 4WD 2 = Med. Duty DODGE 2WD 7 = Med. Duty DODGE 4WD	17 = VAN WHEEL BASE 7 55 = WAGON WHEEL BASE 5 15 = VAN WHEEL BASE 5 53 = 119 WB 13 = 119 WB 05 = CAB CHASSIS WHEEL BASE 5 03 = CAB CHASSIS WHEEL BASE 3	EG2 = 3.5L V6 Gas Engine EXM = 3.0L V6 Turbo Diesel Engine	DGZ = 5-Speed Auto W5A380 Transmission

Load Floor Cargo
Figure 50-355

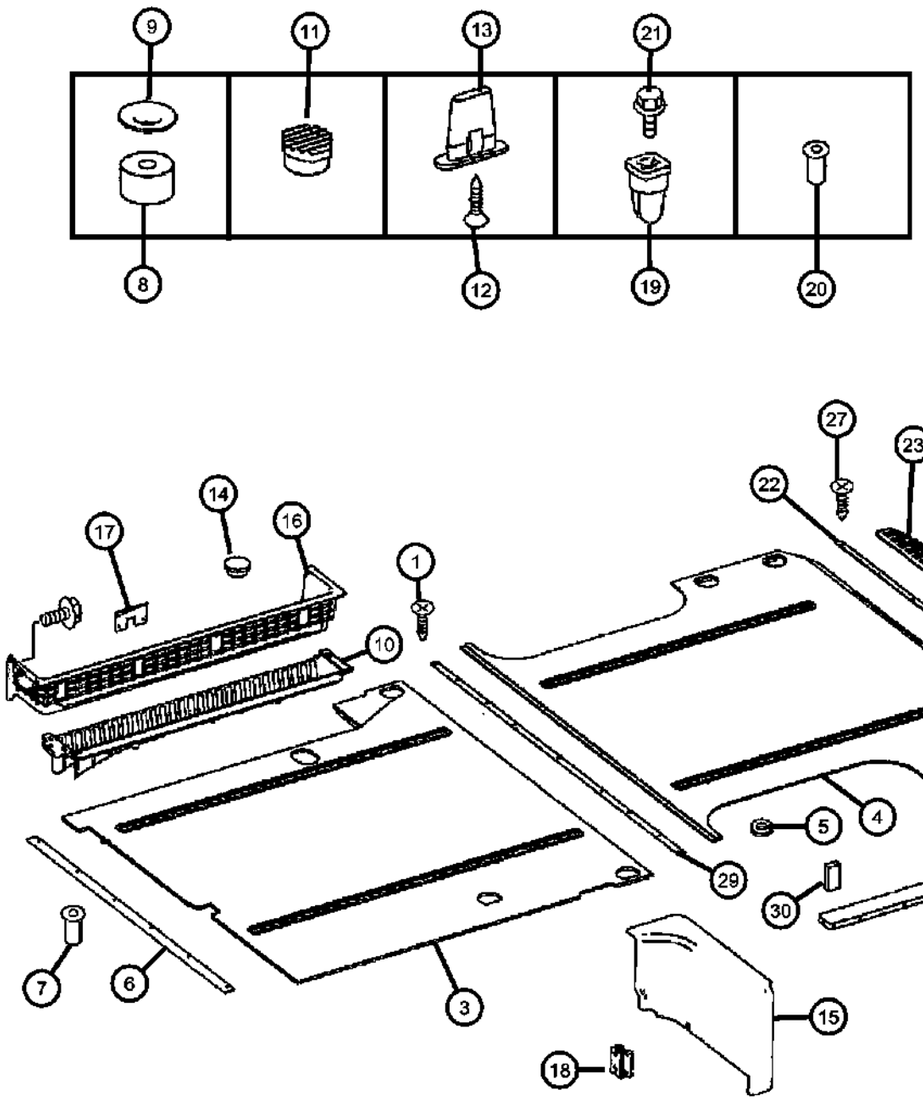

ITEM	PART NUMBER	QTY	LINE	SERIES	BODY	ENGINE	TRANS	TRIM	DESCRIPTION
	1HB34DX8AA	1	2, 3, 6, 7	L	13, 15, 17, 53, 55			*A6	[A6]
		1	2, 3, 6, 7	L	13, 15, 17, 53, 55			*E7	[E7]
		1	2, 3, 6, 7	L	13, 15, 17, 53, 55			*F7	[F7]
12	06104150AA	1	2, 3, 6, 7	L	17, 53, 55, 13, 15				SCREW, Sliding Door Entrance M6 x 60
13	68029953AA	1	2, 3, 6, 7	L	13, 15, 17, 53, 55				INSERT
14									PLUG
	1HB35DX8AA	1	2, 3, 6, 7	L	13, 15, 17, 53, 55			*A6	[A6]
		1	2, 3, 6, 7	L	13, 15, 17, 53, 55			*E7	[E7]
		1	2, 3, 6, 7	L	13, 15, 17, 53, 55			*F7	[F7]
15		1							PLUG, (NOT SERVICED),
16									PANEL
	1HB38NCVAA	1	2, 3, 6, 7	L	13, 15, 17, 53, 55			*E7	[E7] Without [LBB] Lamps
		1	2, 3, 6, 7	L	13, 15, 17, 53, 55			*A6	[A6] Without [LBB] Lamps
		1	2, 3, 6, 7	L	13, 15, 17, 53, 55			*F7	[F7] Without [LBB] Lamps
17									CLIP, Floor Trim
	05125584AA	1	2, 3, 6, 7	L	03, 05				
		1	2, 3, 6, 7	L	13, 15, 17, 53, 55				
18	05101464AA	2	2, 3, 6, 7	L	13, 15, 17, 53, 55				CLIPRight & Left
19	05098837AB	2	2, 3, 6, 7	L					NUT, Plastic Snap-in
20	05134061AA	8	2, 3, 6, 7	L	13, 15, 17, 53, 55				RIVET
21									SCREW
	05104609AA	2	2, 3, 6, 7	L	15, 17, 53, 55, 13				4.8 X 13
		4	3, 7	L	03, 05				4.8 X 13
22	68010771AA	1	2, 3, 6, 7	L	13, 15, 17, 53, 55				MOLDING, Cargo Area Carpet
23									SILL COVER, Interior

SPRINTER (VB)

SERIES	LINE	BODY	ENGINE	TRANSMISSION
L = LOWLINE	3 = HD DODGE 2WD 6 = Lt. Duty DODGE 4WD 2 = Med. Duty DODGE 2WD 7 = Med. Duty DODGE 4WD	17 = VAN WHEEL BASE 7 55 = WAGON WHEEL BASE 5 15 = VAN WHEEL BASE 5 53 = 119 WB 13 = 119 WB 05 = CAB CHASSIS WHEEL BASE 5 03 = CAB CHASSIS WHEEL BASE 3	EG2 = 3.5L V6 Gas Engine EXM = 3.0L V6 Turbo Diesel Engine	DGZ = 5-Speed Auto W5A380 Transmission

Load Floor Cargo
Figure 50-355

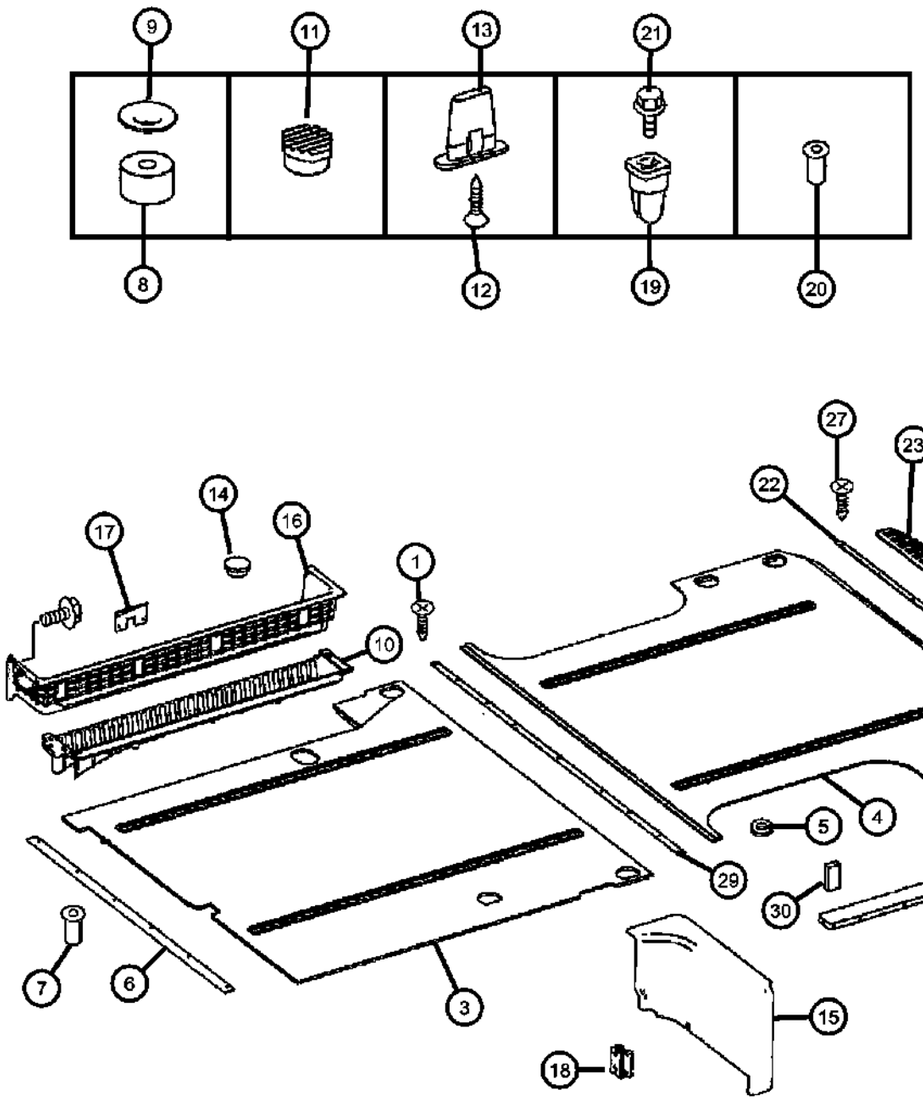

ITEM	PART NUMBER	QTY	LINE	SERIES	BODY	ENGINE	TRANS	TRIM	DESCRIPTION
	1HB48DX9AA	1	2, 3, 6, 7	L	13, 15, 17, 53, 55			*A6	[A6]
		1	2, 3, 6, 7	L	13, 15, 17, 53, 55			*E7	[E7]
		1	2, 3, 6, 7	L	13, 15, 17, 53, 55			*F7	[F7]
24	05104536AA	11	2, 3, 6, 7	L	13, 15, 17, 53, 55				RETAINER
25									COVER
	1HB49DX9AA	2	2, 3, 6, 7	L	13, 15, 17, 53, 55			*A6	[A6]
		2	2, 3, 6, 7	L	13, 15, 17, 53, 55			*E7	[E7]
		2	2, 3, 6, 7	L	13, 15, 17, 53, 55			*F7	[F7]
26									COVER
	1HB50DX9AA	2	2, 3, 6, 7	L	13, 15, 17, 53, 55			*A6	[A6]
		2	2, 3, 6, 7	L	13, 15, 17, 53, 55			*E7	[E7]
		2	2, 3, 6, 7	L	13, 15, 17, 53, 55			*F7	[F7]
27	68010627AA	1	2, 3, 6, 7	L	13, 15, 17, 53, 55				SCREW
28	68010772AA	1	2, 3, 6, 7	L	13, 15, 17, 53, 55				COVER
29	68010624AA	1	2, 3, 6, 7	L	13, 15, 53, 55				MOLDING, Cargo Area Carpet
30	68010773AA	3	2, 3, 6, 7	L	13, 15, 17, 53, 55				INSULATION

SPRINTER (VB)

SERIES	LINE	BODY	ENGINE	TRANSMISSION
L = LOWLINE	3 = HD DODGE 2WD 6 = Lt. Duty DODGE 4WD 2 = Med. Duty DODGE 2WD 7 = Med. Duty DODGE 4WD	17 = VAN WHEEL BASE 7 55 = WAGON WHEEL BASE 5 15 = VAN WHEEL BASE 5 53 = 119 WB 13 = 119 WB 05 = CAB CHASSIS WHEEL BASE 5 03 = CAB CHASSIS WHEEL BASE 3	EG2 = 3.5L V6 Gas Engine EXM = 3.0L V6 Turbo Diesel Engine	DGZ = 5-Speed Auto W5A380 Transmission

Group - 60

Body Sheet Metal Except Doors

060-100 Floor Pans	**060-1000** Sunroof	**060-1300** Sport Bar or Luggage Rack	**060-200** Plugs
060-300 Fenders	**060-400** Hood and Hood Release	**060-500** Cowl and Dash Panel	**060-600** Aperture Panel and Pillar Supports
060-700 Pick-up Box and Fuel Filler Door	**060-900** Roof		

Group - 60 Body Sheet Metal Except Doors

Illustration Title — Group-Fig. No.

Floor Pans
Front Floor Pan....Fig. 60 - 105
Center and Rear Floor Pan....Fig. 60 - 130
Rear Floor Pan....Fig. 60 - 150
Battery Support....Fig. 60 - 185

Plugs
Body Plugs....Fig. 60 - 210
Body Plugs....Fig. 60 - 220
Ventilation Flap....Fig. 60 - 230
Ventilation Flap....Fig. 60 - 240

Fenders
Front Fender....Fig. 60 - 305
Front Fender....Fig. 60 - 310

Hood and Hood Release
Hood And Related Parts....Fig. 60 - 405

Cowl and Dash Panel
Cowel Panel....Fig. 60 - 505
Dash Panel....Fig. 60 - 550
Dash Panel....Fig. 60 - 555
Passenger Compartment Damping....Fig. 60 - 560

Aperture Panel and Pillar Supports
Front Aperture Panel....Fig. 60 - 605
Front Aperture Panel....Fig. 60 - 606
Front Aperture Panel....Fig. 60 - 607
Front Aperture Panel....Fig. 60 - 608
Rear Aperture (Quarter) Panel....Fig. 60 - 651
Rear Aperture (Quarter) Panel....Fig. 60 - 652
Rear Aperture (Quarter) Panel....Fig. 60 - 653
Rear Aperture (Quarter) Panel....Fig. 60 - 654
D-Pillar,....Fig. 60 - 685
D-Pillar....Fig. 60 - 686
D-Pillar....Fig. 60 - 687
D-Pillar Side Panel Inner, Right....Fig. 60 - 688

Pick-up Box and Fuel Filler Door
Fuel Filler Housing And Door....Fig. 60 - 775

Roof
Roof Panel....Fig. 60 - 905
Roof Panel....Fig. 60 - 906
Roof Panel....Fig. 60 - 907
Roof Panel....Fig. 60 - 908
Super High Roof....Fig. 60 - 910
High Roof Panel....Fig. 60 - 915
Low Roof Panel....Fig. 60 - 920

Sunroof
Sunroof Glass and Component Parts....Fig. 60 - 1005
Sunroof Drain Hoses....Fig. 60 - 1050

Sport Bar or Luggage Rack
Roof Rack....Fig. 60 - 1305

Front Floor Pan
Figure 60-105

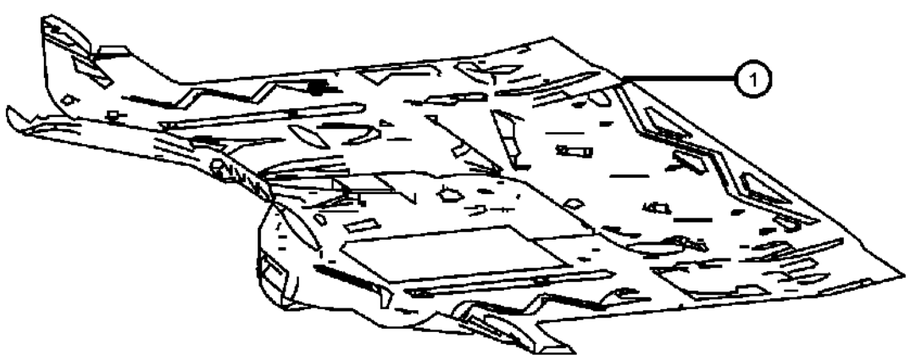

ITEM	PART NUMBER	QTY	LINE	SERIES	BODY	ENGINE	TRANS	TRIM	DESCRIPTION
1	68008207AA	1	2, 3, 6, 7						PAN, Floor

SPRINTER (VB)

SERIES	LINE	BODY	ENGINE	TRANSMISSION
L = LOWLINE	3 = HD DODGE 2WD 6 = Lt. Duty DODGE 4WD 2 = Med. Duty DODGE 2WD 7 = Med. Duty DODGE 4WD	17 = VAN WHEEL BASE 7 55 = WAGON WHEEL BASE 5 15 = VAN WHEEL BASE 5 53 = 119 WB 13 = 119 WB 05 = CAB CHASSIS WHEEL BASE 5 03 = CAB CHASSIS WHEEL BASE 3	EG2 = 3.5L V6 Gas Engine EXM = 3.0L V6 Turbo Diesel Engine	DGZ = 5-Speed Auto W5A380 Transmission

Center and Rear Floor Pan
Figure 60-130

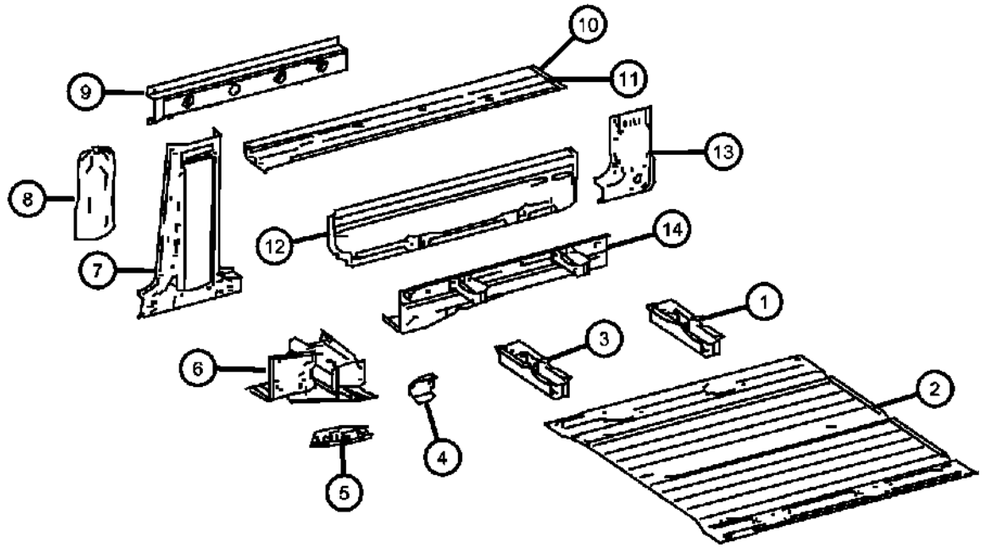

ITEM	PART NUMBER	QTY	LINE	SERIES	BODY	ENGINE	TRANS	TRIM	DESCRIPTION
1	68008250AA	1	2, 3, 6, 7		13, 15, 17, 53, 55				CROSSMEMBER, Front Frame, Outside, Left
2	68008223AA	1	2, 3, 6, 7		13, 15, 17, 53, 55				PAN, Center Floor, Central
3	68008250AA	1	2, 3, 6, 7		13, 15, 17, 53, 55				CROSSMEMBER, Front Frame, Outside, Right
4	68008213AA	2	2, 3, 6, 7						BRACKET, Crash Sensor
5	68008222AA	1	2, 3, 6, 7						SEAL, Central Floor
6									BRACKET
	68008260AA	1	2, 3, 6, 7		13, 15, 17, 53, 55				B-Pillar on the Left
	68008272AA	1	2, 3, 6, 7		13, 15, 17, 53, 55				B-Pillar on the Right
7									PILLAR, Side Cargo Door
	68008266AA	1	2, 3, 6, 7		13, 15, 17, 53, 55				B-Pillar on the Left
	68008275AA	1	2, 3, 6, 7		13, 15, 17, 53, 55				B-Pillar on the Right
8	68008217AA	1	2, 3, 6, 7						INSULATION, B-Pillar
9	68008298AA	1	2, 3, 6, 7		13, 15, 17, 53, 55				SUPPORT, Sill ReinforcementRight & Left
10									PAN, Floor
	68008234AA	1	2, 3, 6, 7		13, 15, 17				Central Right, Outside
	68008236AA	1	2, 3, 6, 7		13, 15, 17, 53, 55				Central Left, Outside
11	68008236AA	1	2, 3, 6, 7		13, 15, 17, 53, 55				PAN, Floor, With Additional Auxilary Heater
12									SUPPORT, Sill Reinforcement
	68008253AA	1	2, 3, 6, 7		13, 15, 17, 53, 55				Outside, Left
	68008258AA	1	2, 3, 6, 7		13, 15, 17, 53, 55				Outside, Right
13									PILLAR, Side Cargo Door
	68008276AA	1	2, 3, 6, 7		13, 15, 17, 53, 55				C-Pillar, Left
	68008279AA	1	2, 3, 6, 7		13, 15, 17, 53, 55				C-Pillar, Right
14									PANEL

SPRINTER (VB)

SERIES	LINE	BODY	ENGINE	TRANSMISSION
L = LOWLINE	3 = HD DODGE 2WD 6 = Lt. Duty DODGE 4WD 2 = Med. Duty DODGE 2WD 7 = Med. Duty DODGE 4WD	17 = VAN WHEEL BASE 7 55 = WAGON WHEEL BASE 5 15 = VAN WHEEL BASE 5 53 = 119 WB 13 = 119 WB 05 = CAB CHASSIS WHEEL BASE 5 03 = CAB CHASSIS WHEEL BASE 3	EG2 = 3.5L V6 Gas Engine EXM = 3.0L V6 Turbo Diesel Engine	DGZ = 5-Speed Auto W5A380 Transmission

Center and Rear Floor Pan
Figure 60-130

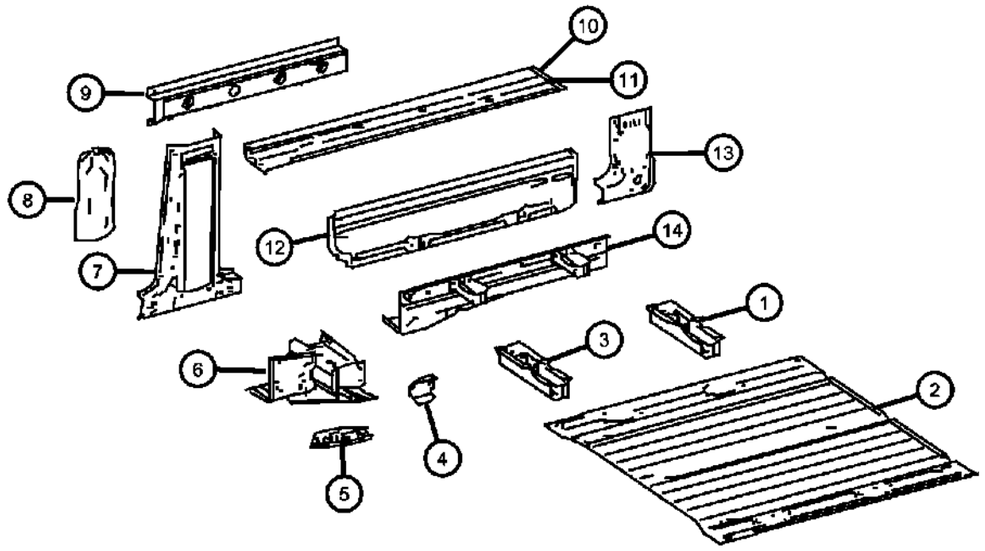

ITEM	PART NUMBER	QTY	LINE	SERIES	BODY	ENGINE	TRANS	TRIM	DESCRIPTION
	68008289AA	1	2, 3, 6, 7		13, 15, 17, 53, 55				Front Left
	68008294AA	1	2, 3, 6, 7		13, 15, 17, 53, 55				Left Rear Entrance

SPRINTER (VB)

SERIES	LINE	BODY	ENGINE	TRANSMISSION
L = LOWLINE	3 = HD DODGE 2WD 6 = Lt. Duty DODGE 4WD 2 = Med. Duty DODGE 2WD 7 = Med. Duty DODGE 4WD	17 = VAN WHEEL BASE 7 55 = WAGON WHEEL BASE 5 15 = VAN WHEEL BASE 5 53 = 119 WB 13 = 119 WB 05 = CAB CHASSIS WHEEL BASE 5 03 = CAB CHASSIS WHEEL BASE 3	EG2 = 3.5L V6 Gas Engine EXM = 3.0L V6 Turbo Diesel Engine	DGZ = 5-Speed Auto W5A380 Transmission

Rear Floor Pan
Figure 60-150

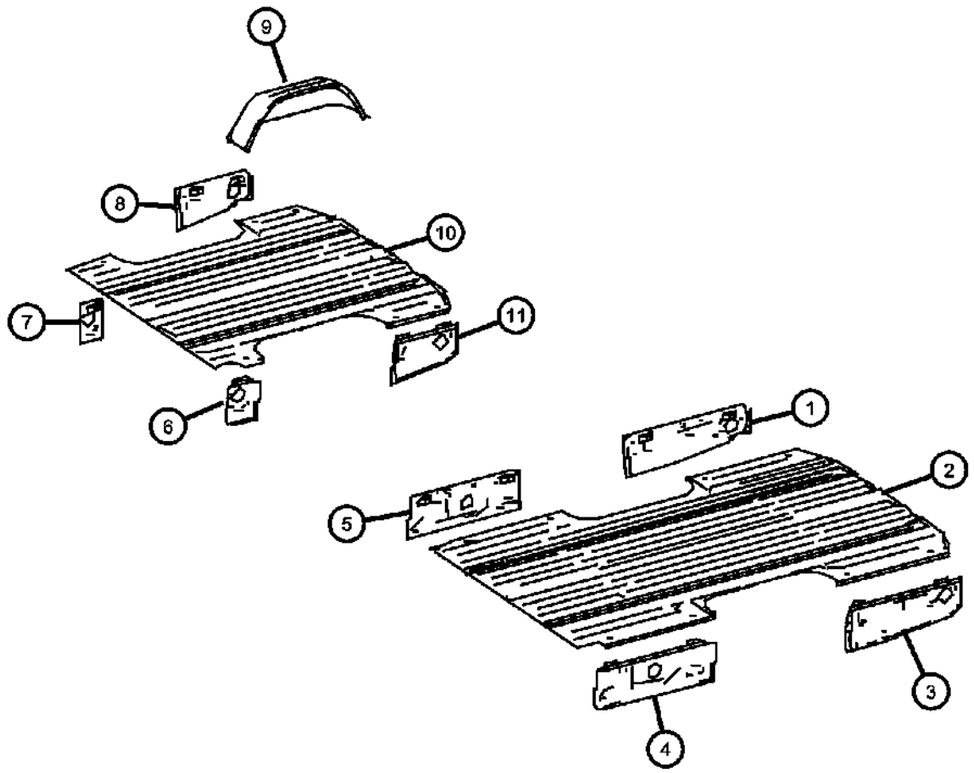

ITEM	PART NUMBER	QTY	LINE	SERIES	BODY	ENGINE	TRANS	TRIM	DESCRIPTION
1	68008352AA	1	2, 3, 6, 7		15, 55				SUPPORT
2	68008303AA	1	2, 3, 6, 7		13, 15, 17, 53, 55				PANELRear
3	68008353AA	1	2, 3, 6, 7		15, 55				SUPPORT
4	68008334AA	1	2, 3, 6, 7		15, 17, 55				SUPPORT, C-Pillar Left
5	68008341AA	1	2, 3, 6, 7		15, 17, 55				SUPPORT, C-Pillar Right
6	68008333AA	1	2, 3, 6, 7		13, 53				SUPPORT, C-Pillar Left
7	68008340AA	1	2, 3, 6, 7		13, 53				SUPPORT, C-Pillar Right
8	68008350AA	1	2, 3, 6, 7		13, 53				SUPPORT, Rear Right
9	68008346AA	2	2, 6		13, 15, 17, 53, 55				PANEL, Wheelhouse
10	68008307AA	1	2, 6		13, 53				PAN, Rear Floor
11	68008351AA	1	2, 3, 6, 7		13, 53				SUPPORT, Rear Left

SPRINTER (VB)

SERIES	LINE	BODY	ENGINE	TRANSMISSION
L = LOWLINE	3 = HD DODGE 2WD 6 = Lt. Duty DODGE 4WD 2 = Med. Duty DODGE 2WD 7 = Med. Duty DODGE 4WD	17 = VAN WHEEL BASE 7 55 = WAGON WHEEL BASE 5 15 = VAN WHEEL BASE 5 53 = 119 WB 13 = 119 WB 05 = CAB CHASSIS WHEEL BASE 5 03 = CAB CHASSIS WHEEL BASE 3	EG2 = 3.5L V6 Gas Engine EXM = 3.0L V6 Turbo Diesel Engine	DGZ = 5-Speed Auto W5A380 Transmission

Battery Support
Figure 60-185

ITEM	PART NUMBER	QTY	LINE	SERIES	BODY	ENGINE	TRANS	TRIM	DESCRIPTION
1	68006358AA	1	2, 3, 6, 7						COVER
2	05126197AA	2	2, 3, 6, 7						SCREW
3	68006357AA	1	2, 3, 6, 7						TRAY, Battery

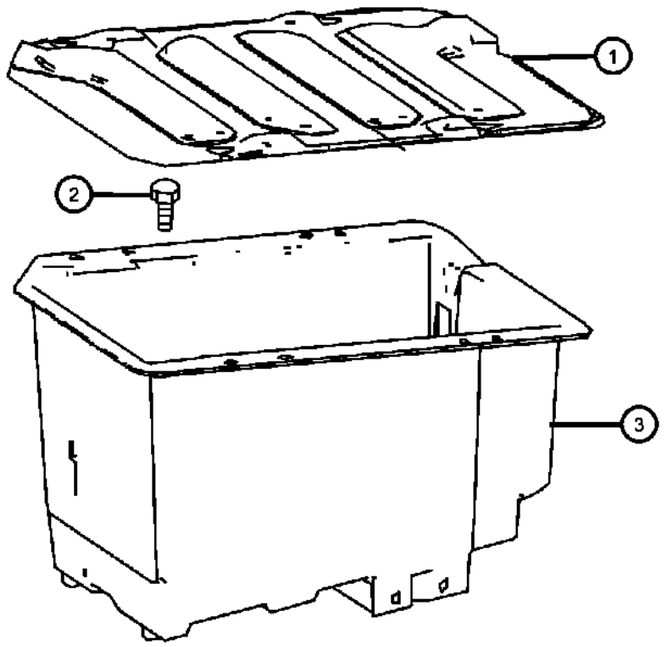

SPRINTER (VB)

SERIES	LINE	BODY	ENGINE	TRANSMISSION
L = LOWLINE	3 = HD DODGE 2WD 6 = Lt. Duty DODGE 4WD 2 = Med. Duty DODGE 2WD 7 = Med. Duty DODGE 4WD	17 = VAN WHEEL BASE 7 55 = WAGON WHEEL BASE 5 15 = VAN WHEEL BASE 5 53 = 119 WB 13 = 119 WB 05 = CAB CHASSIS WHEEL BASE 5 03 = CAB CHASSIS WHEEL BASE 3	EG2 = 3.5L V6 Gas Engine EXM = 3.0L V6 Turbo Diesel Engine	DGZ = 5-Speed Auto W5A380 Transmission

Body Plugs
Figure 60-210

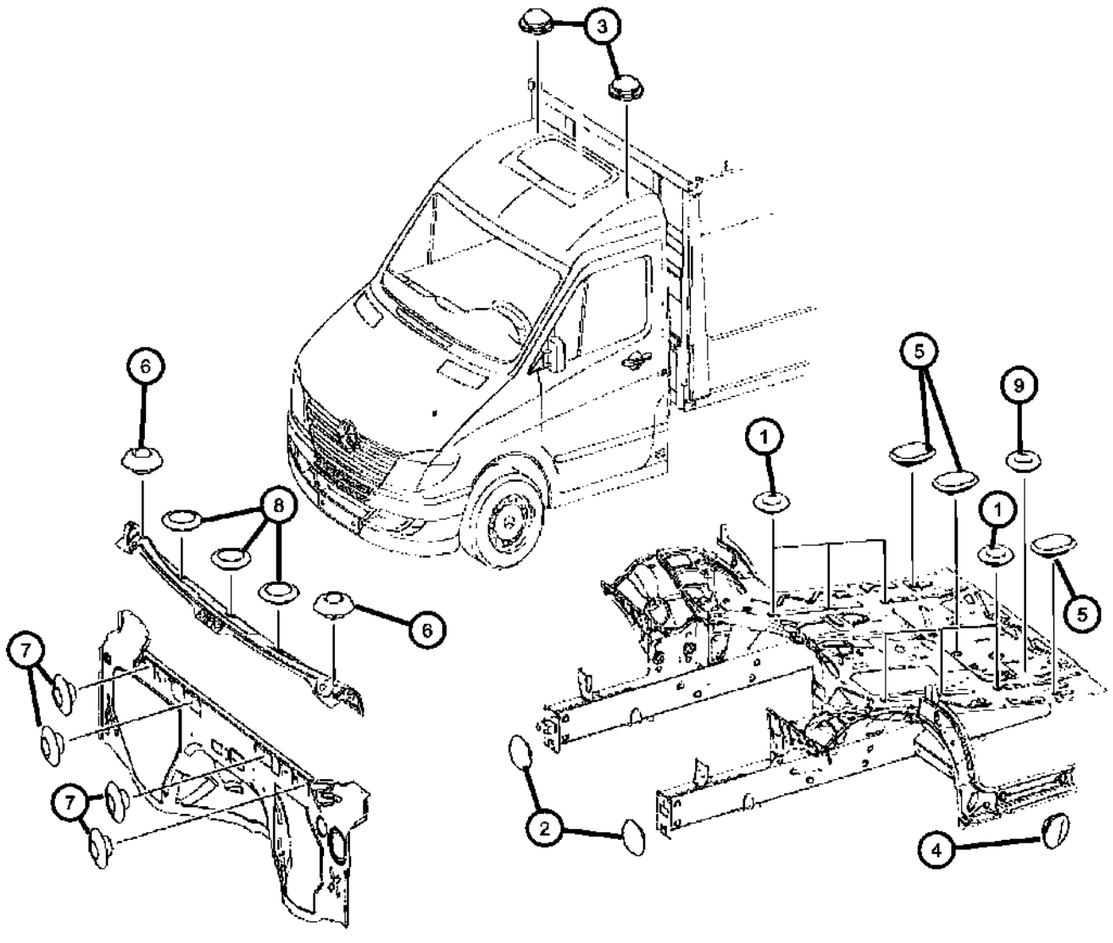

ITEM	PART NUMBER	QTY	LINE	SERIES	BODY	ENGINE	TRANS	TRIM	DESCRIPTION
1									PLUG, Body
	68006359AA	2	3, 7		03, 05				Front Floor [20MM]
	68006360AA	5	3, 7		03, 05				Front Floor [15MM]
	68036735AA	1	2, 3, 6, 7						Front Floor Below Passenger Seat [22.9 x 32.4MM]
2	68006361AA	2	3, 7		03, 05				PLUG, Body, Front Frame [10MM]
3	05098417AA	2	3, 7		03, 05				PLUG, Roof, Inside [15.5MM]
4	68006953AA	1	2, 3, 6, 7		13, 15, 17, 53, 55				PLUG, [36 MM]
5									PLUG, Body
	68006364AA	AR	2, 3, 6, 7						Front Floor [15x25MM]
	68006954AA	1	2, 3, 6, 7						Front Floor [27x41MM]
6	05103253AA	2	3, 7		03, 05				PLUG, Body, Window Sill Support [10MM]
7	68006362AA	5	3, 7		03, 05				PLUG, Body, Fire Wall [12MM]
8	68006363AA	3	3, 7		03, 05				PLUG, At Window Sill Support [25MM]
9	68006360AA	5	3, 7		03, 05				PLUG, Body, Below Seats [15MM]

SPRINTER (VB)

SERIES	LINE	BODY	ENGINE	TRANSMISSION
L = LOWLINE	3 = HD DODGE 2WD 6 = Lt. Duty DODGE 4WD 2 = Med. Duty DODGE 2WD 7 = Med. Duty DODGE 4WD	17 = VAN WHEEL BASE 7 55 = WAGON WHEEL BASE 5 15 = VAN WHEEL BASE 5 53 = 119 WB 13 = 119 WB 05 = CAB CHASSIS WHEEL BASE 5 03 = CAB CHASSIS WHEEL BASE 3	EG2 = 3.5L V6 Gas Engine EXM = 3.0L V6 Turbo Diesel Engine	DGZ = 5-Speed Auto W5A380 Transmission

Body Plugs
Figure 60-220

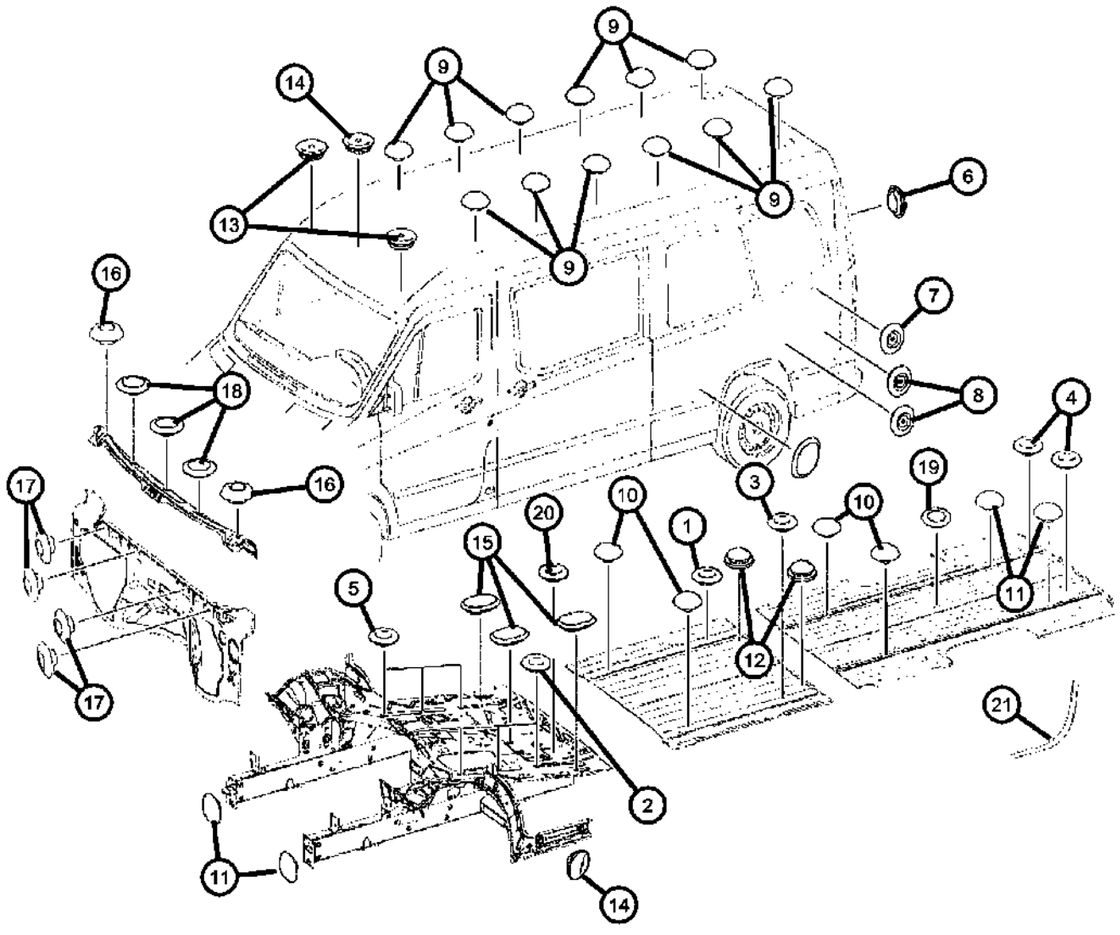

ITEM	PART NUMBER	QTY	LINE	SERIES	BODY	ENGINE	TRANS	TRIM	DESCRIPTION
1	68008280AA	2	2, 3, 6, 7		13, 15, 17, 53, 55				PLUG, Central Floor [35MM]
2									PLUG, Body
	68006359AA	2	2, 3, 6, 7		13, 15, 17, 53, 55				Front Floor [20MM]
	68006360AA	5	2, 3, 6, 7		13, 15, 17, 53, 55				Front Floor [15MM]
3	68006359AA	10	2, 3, 6, 7		13, 15, 17, 53, 55				PLUG, Body, Central Floor [20MM]
4	68006359AA	10	2, 3, 6, 7		13, 15, 17, 53, 55				PLUG, Body, Rear Floor [20MM]
5	68036735AA	1	2, 3, 6, 7						PLUG, Body, Below Passenger Seat [22.9x34.4MM]
6	68006359AA	1	2, 3, 6, 7		13, 15, 17, 53, 55				PLUG, Body, Rear End, Door [20MM]
7	68006360AA	5	2, 3, 6, 7		13, 15, 17, 53, 55				PLUG, Body, Side Panel [15MM]
8	68008280AA	2	2, 3, 6, 7		13, 15, 17, 53, 55				PLUG, Side Panel [35MM]
9									PLUG, Body
	68006361AA	16	2, 3, 6, 7		53, 13				Roof [10MM] / Up To Chassis [S 162103 / 01/31/07] Or Up To Chassis [A 960009 / 11/23/06]
	68026461AA	16	2, 3, 6, 7		13, 53				
		22	2, 3, 6, 7		15, 55				Roof [18.5MM] / After Chassis [S 162104 / 01/31/07] Or After Chassis [A 962845 / 02/21/07]
10	68006361AA	4	2, 3, 6, 7		13, 15, 17, 53, 55				PLUG, Body, Floor Plate [10 MM]
11	68006361AA	2	2, 3, 6, 7		13, 15, 17, 53, 55				PLUG, Body, Front Frame Area [10MM]
12	05096545AA	2	2, 3, 6, 7		13, 15, 17, 53, 55				PLUG, Body, Rubber Buffer [12MM]
13	68042921AA	2	2, 3, 6, 7		13, 15, 17, 53, 55				PLUG, Roof [40MM]
14	68006953AA	1	2, 3, 6, 7		13, 15, 17, 53, 55				PLUG, Roof & Frame [25MM]
15									PLUG, Body
	68006954AA	1	2, 3, 6, 7						Front Floor [27x41MM]
	68006364AA	AR	2, 3, 6, 7						Front Floor & Side Panel [15x25MM]
16	05103253AA	2	2, 3, 6, 7		13, 15, 17, 53, 55				PLUG, Body, Window Sill Support [10MM]

SPRINTER (VB)

SERIES	LINE	BODY	ENGINE	TRANSMISSION
L = LOWLINE	3 = HD DODGE 2WD 6 = Lt. Duty DODGE 4WD 2 = Med. Duty DODGE 2WD 7 = Med. Duty DODGE 4WD	17 = VAN WHEEL BASE 7 55 = WAGON WHEEL BASE 5 15 = VAN WHEEL BASE 5 53 = 119 WB 13 = 119 WB 05 = CAB CHASSIS WHEEL BASE 5 03 = CAB CHASSIS WHEEL BASE 3	EG2 = 3.5L V6 Gas Engine EXM = 3.0L V6 Turbo Diesel Engine	DGZ = 5-Speed Auto W5A380 Transmission

AR = use ase required - = Non illustrrated part

<< RETURN TO GROUP INDEX

Body Plugs
Figure 60-220

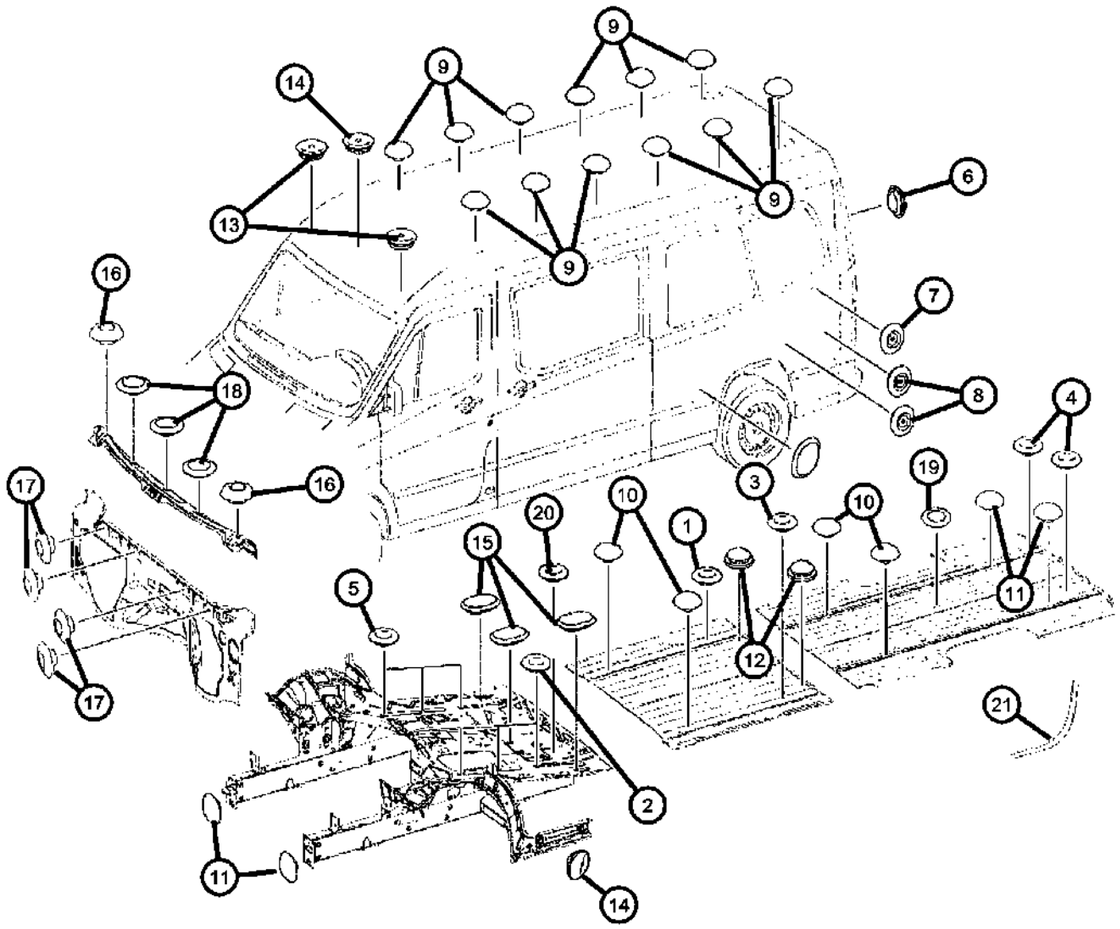

ITEM	PART NUMBER	QTY	LINE	SERIES	BODY	ENGINE	TRANS	TRIM	DESCRIPTION
17	68006362AA	5	2, 3, 6, 7		13, 15, 17, 53, 55				PLUG, Body, At Fire Wall [12MM]
18	68006363AA	3	2, 3, 6, 7		13, 15, 17, 53, 55				PLUG, Window Sill Support [25MM]
19	68008281AA	1	2, 6		53, 55				GROMMET, Central Floor [29.59MM]
20	68006360AA	5	2, 3, 6, 7		13, 15, 17, 53, 55				PLUG, Body, Floor Below Front Seats [15MM]
21	05114444AA	8	2, 3, 6, 7		55, 13, 15, 17, 53				TAPE

SPRINTER (VB)

SERIES	LINE	BODY	ENGINE	TRANSMISSION
L = LOWLINE	3 = HD DODGE 2WD 6 = Lt. Duty DODGE 4WD 2 = Med. Duty DODGE 2WD 7 = Med. Duty DODGE 4WD	17 = VAN WHEEL BASE 7 55 = WAGON WHEEL BASE 5 15 = VAN WHEEL BASE 5 53 = 119 WB 13 = 119 WB 05 = CAB CHASSIS WHEEL BASE 5 03 = CAB CHASSIS WHEEL BASE 3	EG2 = 3.5L V6 Gas Engine EXM = 3.0L V6 Turbo Diesel Engine	DGZ = 5-Speed Auto W5A380 Transmission

AR = use ase required - = Non illustrrated part

<< RETURN TO GROUP INDEX

Ventilation Flap
Figure 60-230

ITEM	PART NUMBER	QTY	LINE	SERIES	BODY	ENGINE	TRANS	TRIM	DESCRIPTION
1	05104472AA	2	3, 7		03, 05				EXHAUSTER, Quarter Panel, Flap
2	05124736AA	1	3, 7		03, 05				EXHAUSTER, Quarter Panel, Duct
3	05124903AA	2	3, 7		03, 05				EXHAUSTER, Quarter Panel, Grille
4	05125858AA	2	3, 7		03, 05				CLIP, U Type

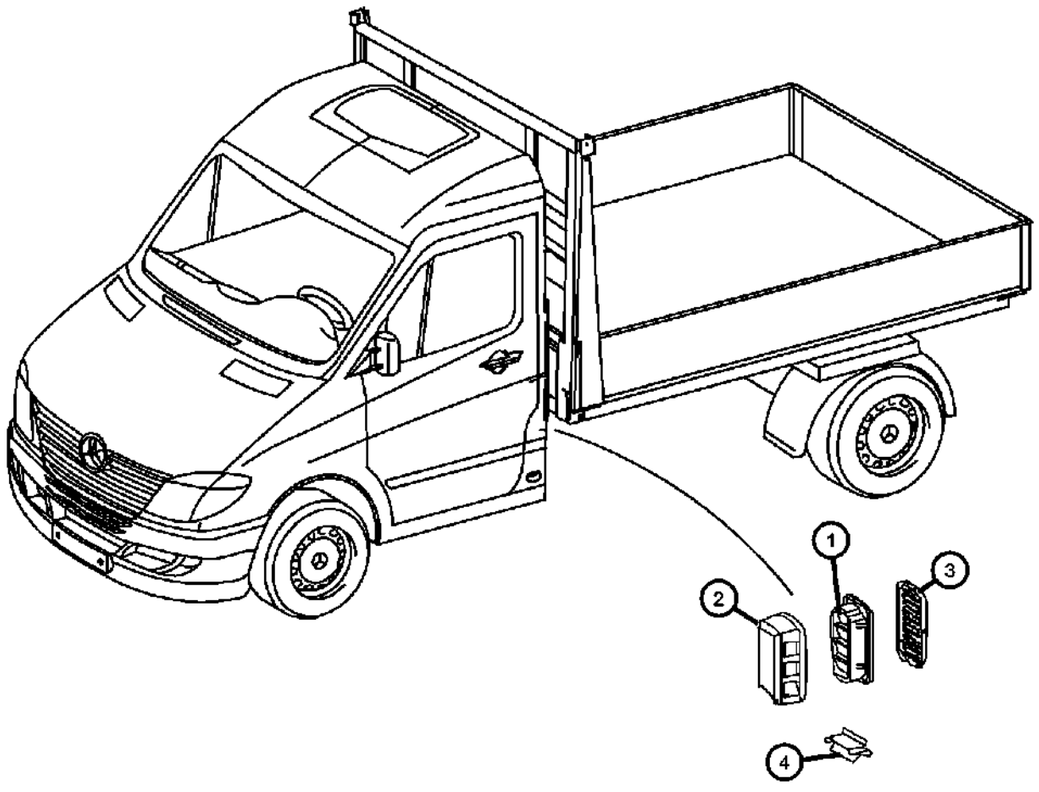

SPRINTER (VB)

SERIES	LINE	BODY	ENGINE	TRANSMISSION
L = LOWLINE	3 = HD DODGE 2WD 6 = Lt. Duty DODGE 4WD 2 = Med. Duty DODGE 2WD 7 = Med. Duty DODGE 4WD	17 = VAN WHEEL BASE 7 55 = WAGON WHEEL BASE 5 15 = VAN WHEEL BASE 5 53 = 119 WB 13 = 119 WB 05 = CAB CHASSIS WHEEL BASE 5 03 = CAB CHASSIS WHEEL BASE 3	EG2 = 3.5L V6 Gas Engine EXM = 3.0L V6 Turbo Diesel Engine	DGZ = 5-Speed Auto W5A380 Transmission

Ventilation Flap
Figure 60-240

ITEM	PART NUMBER	QTY	LINE	SERIES	BODY	ENGINE	TRANS	TRIM	DESCRIPTION
1	05104472AA	2	2, 3, 6, 7		13, 15, 17, 53, 55				EXHAUSTER, Quarter Panel

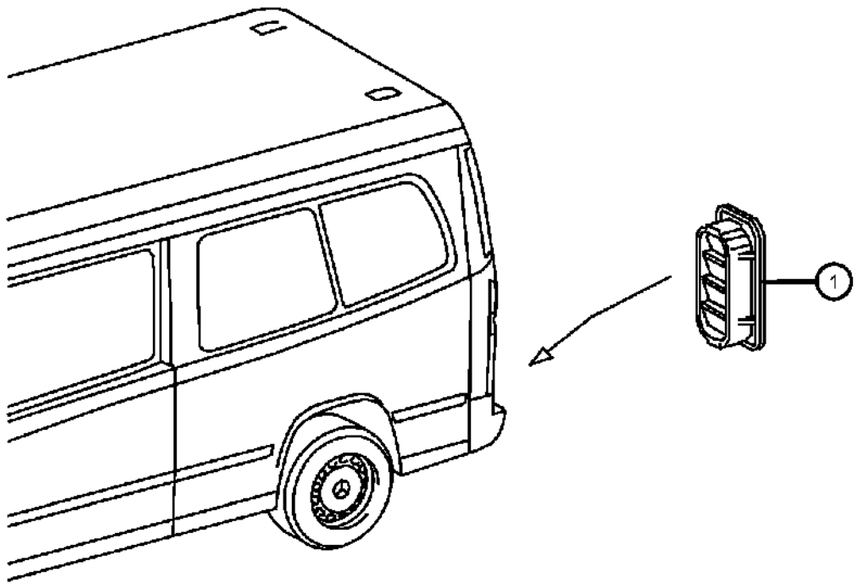

SPRINTER (VB)

SERIES	LINE	BODY	ENGINE	TRANSMISSION
L = LOWLINE	3 = HD DODGE 2WD 6 = Lt. Duty DODGE 4WD 2 = Med. Duty DODGE 2WD 7 = Med. Duty DODGE 4WD	17 = VAN WHEEL BASE 7 55 = WAGON WHEEL BASE 5 15 = VAN WHEEL BASE 5 53 = 119 WB 13 = 119 WB 05 = CAB CHASSIS WHEEL BASE 5 03 = CAB CHASSIS WHEEL BASE 3	EG2 = 3.5L V6 Gas Engine EXM = 3.0L V6 Turbo Diesel Engine	DGZ = 5-Speed Auto W5A380 Transmission

Front Fender
Figure 60-305

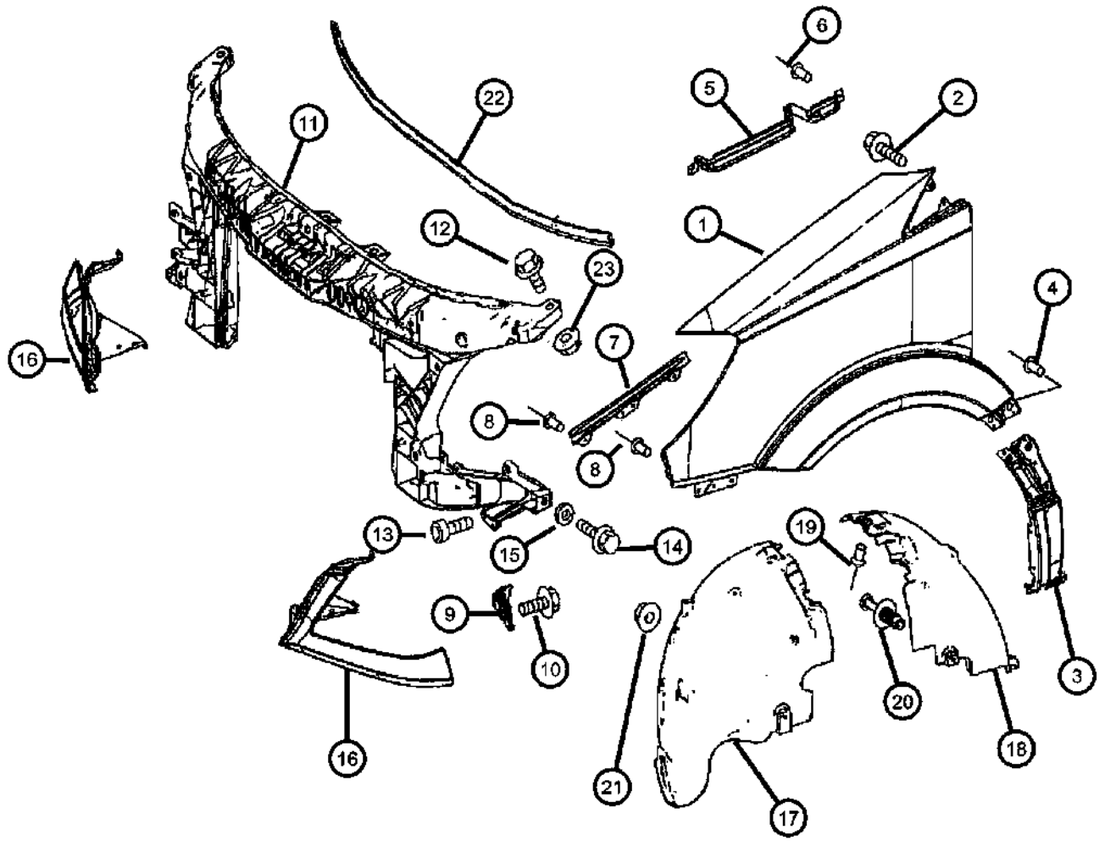

ITEM	PART NUMBER	QTY	LINE	SERIES	BODY	ENGINE	TRANS	TRIM	DESCRIPTION
1									FENDER, Front
	68009869AA	1	2, 3, 6, 7						Left
	68009877AA	1	2, 3, 6, 7						Right
2	06104120AA	4	2, 3, 6, 7		13, 15, 17, 53, 55				SCREW, Hex Head, M6x12
3									EXTENSION, Fender
	68009871AA	1	2, 3, 6, 7						Left
	68009880AA	1	2, 3, 6, 7						Right
4	68009873AA	2	2, 3, 6, 7		13, 15, 17, 53, 55				RIVET, Blind
5									SUPPORT, Fender
	68004962AA	1	2, 3, 6, 7						Left
	68004963AA	1	2, 3, 6, 7						Right
6	68009873AA	3	2, 3, 6, 7						RIVET, Blind
7									SUPPORT, Fender
	68009874AA	1	2, 3, 6, 7						Left
	68009875AA	1	2, 3, 6, 7						Right
8	68009873AA	3	2, 3, 6, 7						RIVET, Blind
9									RETAINER
	1HE32XDVAA	1	2, 3, 6, 7						[A6], Right
	1HE33XDVAA	1	2, 3, 6, 7						[A6], Left
10	06104634AA	2	2, 3, 6, 7						SCREW, Console
11	68014737AA	1	2, 3, 6, 7						SUPPORT, Radiator
12	05135858AA	2	2, 3, 6, 7						BOLT, Hex Head
13	68010553AA	2	2, 3, 6, 7		13, 15, 17, 53, 55				BOLT, Hex Head
14	06104025AA	4	2, 3, 6, 7						BOLT, Hex Flange Head, M8x1.25x30
15	05098108AA	4	2, 3, 6, 7		13, 15, 17, 53, 55				WASHER, Flat
16									PANEL, Headlamp support
	68005391AA	1	2, 3, 6, 7		13, 15, 17, 53, 55				Left
		1	3, 7		03, 05				Left
	68005392AA	1	2, 3, 6, 7		13, 15, 17, 53, 55				With Wiper, Left

SPRINTER (VB)

SERIES	LINE	BODY	ENGINE	TRANSMISSION
L = LOWLINE	3 = HD DODGE 2WD 6 = Lt. Duty DODGE 4WD 2 = Med. Duty DODGE 2WD 7 = Med. Duty DODGE 4WD	17 = VAN WHEEL BASE 7 55 = WAGON WHEEL BASE 5 15 = VAN WHEEL BASE 5 53 = 119 WB 13 = 119 WB 05 = CAB CHASSIS WHEEL BASE 5 03 = CAB CHASSIS WHEEL BASE 3	EG2 = 3.5L V6 Gas Engine EXM = 3.0L V6 Turbo Diesel Engine	DGZ = 5-Speed Auto W5A380 Transmission

Front Fender
Figure 60-305

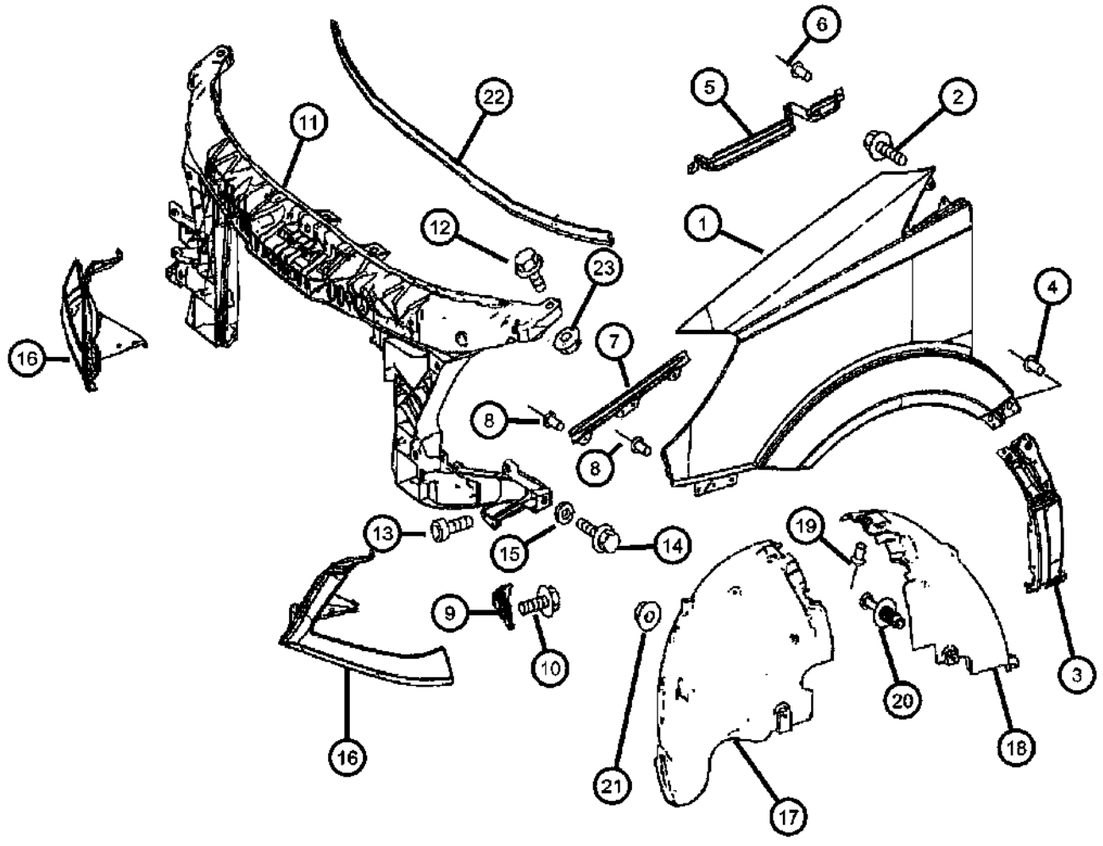

ITEM	PART NUMBER	QTY	LINE	SERIES	BODY	ENGINE	TRANS	TRIM	DESCRIPTION
		1	3, 7		03, 05				With Wiper, Left
	68005393AA	1	3, 7		03, 05				With Wiper, Right
		1	2, 3, 6, 7		13, 15, 17, 53, 55				With Wiper, Right
	68005394AA	1	3, 7		03, 05				Right
		1	2, 3, 6, 7		13, 15, 17, 53, 55				Right
17									WHEELHOUSE, Front Inner
	68014738AA	1	3, 7		03, 05				Right
		1	2, 3, 6, 7		13, 15, 17, 53, 55				Right
	68014739AA	1	3, 7		03, 05				Left
		1	2, 3, 6, 7		13, 15, 17, 53, 55				Left
18									WHEELHOUSE, Front Inner, Rear
	68014740AA	1	3, 7		03, 05				Right
		1	2, 3, 6, 7		13, 15, 17, 53, 55				Right
	68014741AA	1	3, 7		03, 05				Left
		1	2, 3, 6, 7		13, 15, 17, 53, 55				Left
19	1AR96DX9AA	8	2, 3, 6, 7		13, 15, 17, 53, 55				RIVET, Plastic, Lining of Wheelhouse
20	05166238AA	4	2, 3, 6, 7		13, 15, 17, 53, 55				RIVET, Plastic
21	06104914AA	12	2, 3, 6, 7						NUT, Plastic, Wheelhouse Lining
22	68014742AA	1	2, 3, 6, 7						SEAL, Engine Hood
23									NUT, Hex Flange Lock
	05125760AA	2	3, 7		03, 05				
		2	2, 3, 6, 7		13, 15, 17, 53, 55				

SPRINTER (VB)

SERIES	LINE	BODY	ENGINE	TRANSMISSION
L = LOWLINE	3 = HD DODGE 2WD 6 = Lt. Duty DODGE 4WD 2 = Med. Duty DODGE 2WD 7 = Med. Duty DODGE 4WD	17 = VAN WHEEL BASE 7 55 = WAGON WHEEL BASE 5 15 = VAN WHEEL BASE 5 53 = 119 WB 13 = 119 WB 05 = CAB CHASSIS WHEEL BASE 5 03 = CAB CHASSIS WHEEL BASE 3	EG2 = 3.5L V6 Gas Engine EXM = 3.0L V6 Turbo Diesel Engine	DGZ = 5-Speed Auto W5A380 Transmission

Front Fender
Figure 60-310

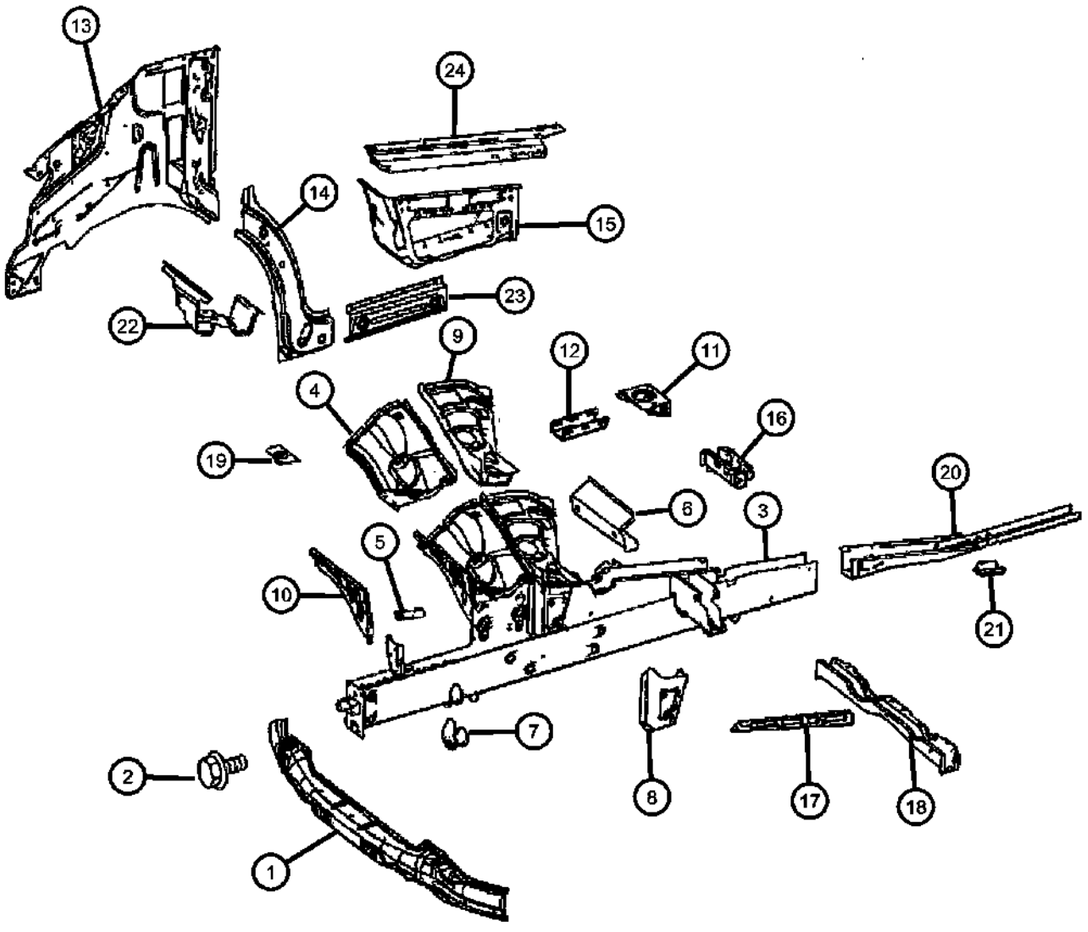

ITEM	PART NUMBER	QTY	LINE	SERIES	BODY	ENGINE	TRANS	TRIM	DESCRIPTION
1	68006349AA	1	2, 3, 6, 7						REINFORCEMENT, Front Bumper
2									SCREW
	05073723AB	6	3, 7		03, 05				
		6	2, 3, 6, 7		13, 15, 17, 53, 55				
	06104024AA	2	3, 7		03, 05				
		2	2, 3, 6, 7		13, 15, 17, 53, 55				
3									RAIL, Front Side Rail Front
	68006247AA	1	3, 7		03, 05				Left
		1	2, 3, 6, 7		13, 15, 17, 53, 55				Left
	68006284AA	1	2, 3, 6, 7						Right
4									WHEELHOUSE
	68006263AA	1	2, 3, 6, 7						Left
	68006290AA	1	2, 3, 6, 7						Right
5									BRACKET, Brake Hose
	68006265AA	1	2, 3, 6, 7						Left
	68006286AA	1	2, 3, 6, 7						Right
6									RAIL, Front Crossmember
	68006251AA	1	3, 7		03, 05				
		1	2, 3, 6, 7		13, 15, 17, 53, 55				
7									REINFORCEMENT, Front Side Rail, Jacking
	68006253AA	1	3, 7		03, 05				
		1	2, 3, 6, 7		13, 15, 17, 53, 55				
8									REINFORCEMENT, Front Side Rail
	68006257AA	1	2, 3, 6, 7		13, 15, 17, 53, 55				Left
	68006287AA	1	2, 3, 6, 7						Right
		1	3, 7		03, 05				Left
9									WHEELHOUSE
	68006261AA	1	2, 3, 6, 7						Left
	68006288AA	1	2, 3, 6, 7						Right

SPRINTER (VB)

SERIES	LINE	BODY	ENGINE	TRANSMISSION
L = LOWLINE	3 = HD DODGE 2WD 6 = Lt. Duty DODGE 4WD 2 = Med. Duty DODGE 2WD 7 = Med. Duty DODGE 4WD	17 = VAN WHEEL BASE 7 55 = WAGON WHEEL BASE 5 15 = VAN WHEEL BASE 5 53 = 119 WB 13 = 119 WB 05 = CAB CHASSIS WHEEL BASE 5 03 = CAB CHASSIS WHEEL BASE 3	EG2 = 3.5L V6 Gas Engine EXM = 3.0L V6 Turbo Diesel Engine	DGZ = 5-Speed Auto W5A380 Transmission

Front Fender
Figure 60-310

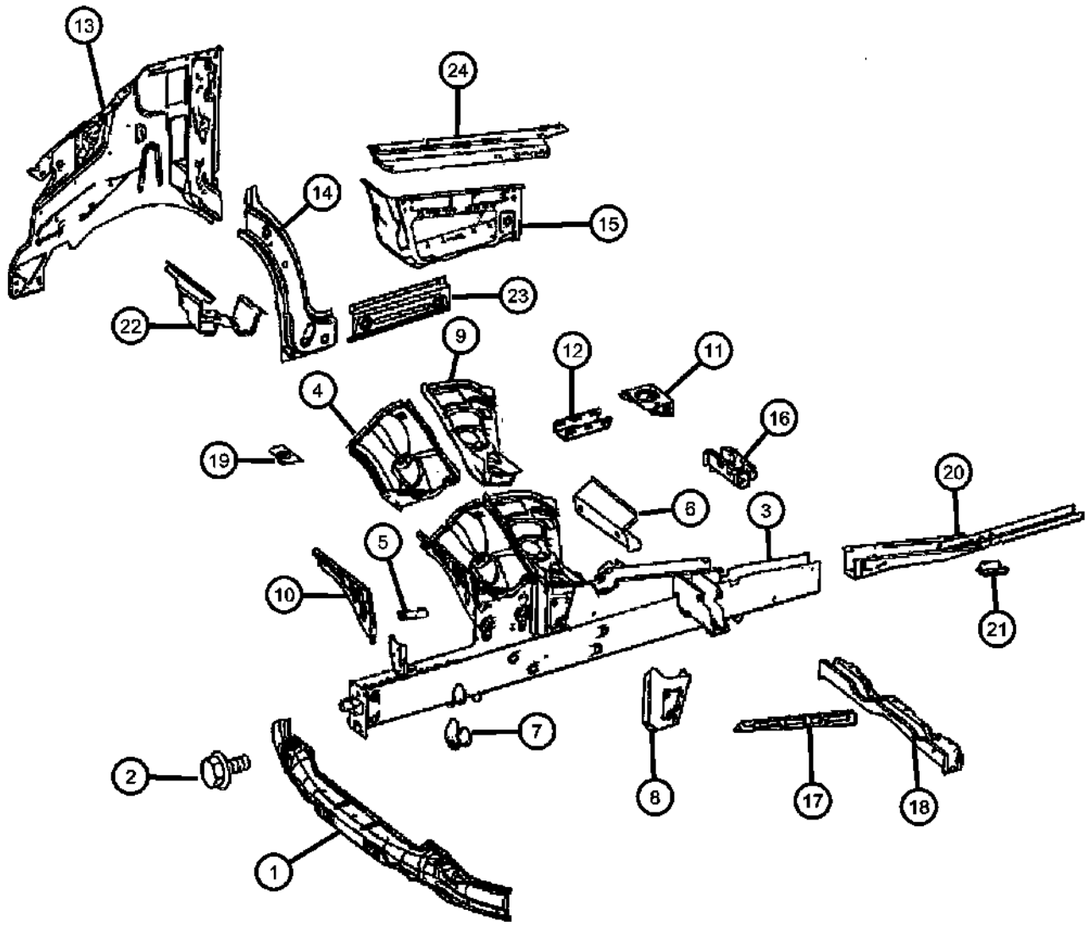

ITEM	PART NUMBER	QTY	LINE	SERIES	BODY	ENGINE	TRANS	TRIM	DESCRIPTION
10									REINFORCEMENT, Front Side Rail
	68006262AA	1	3, 7		03, 05				Left
		1	2, 3, 6, 7		13, 15, 17, 53, 55				Left
	68006289AA	1	2, 3, 6, 7						Right
11	68006298AA	1	2, 3, 6, 7						BRACKET, Exhaust
12	68006278AA	2	2, 3, 6, 7						REINFORCEMENT, Front Side Rail
13	68006300AA	1	2, 3, 6, 7						PANEL, Fender
14									PANEL, Body Side Aperture
	68006328AA	1	2, 3, 6, 7						Left
	68006330AA	1	2, 3, 6, 7						Right
15									STEP PAD, Side Step
	68006332AA	1	2, 3, 6, 7						Left
	68006333AA	1	2, 3, 6, 7						Right
16									SUPPORT
	68006343AA	1	2, 3, 6, 7						Left
	68006345AA	1	2, 3, 6, 7						Right
17	68006320AA	1	2, 3, 6, 7						REINFORCEMENT
18	68006334AA	1	2, 3, 6, 7						CROSSMEMBER, Front Floor
19	68006337AA	3	2, 3, 6, 7						REINFORCEMENT
20	68006339AA	2	2, 3, 6, 7						REINFORCEMENT, Front Side Rail
21	05129604AA	1	2, 3, 6, 7						BRACKET, Wiring
22	68006347AA	1	2, 3, 6, 7						BRACKET, Jack
23									PANEL, Body Side Aperture
	68006329AA	1	2, 3, 6, 7						Left
	68006331AA	1	2, 3, 6, 7						Right
24	68006341AA	1	2, 3, 6, 7						REINFORCEMENT

SPRINTER (VB)

SERIES	LINE	BODY	ENGINE	TRANSMISSION
L = LOWLINE	3 = HD DODGE 2WD 6 = Lt. Duty DODGE 4WD 2 = Med. Duty DODGE 2WD 7 = Med. Duty DODGE 4WD	17 = VAN WHEEL BASE 7 55 = WAGON WHEEL BASE 5 15 = VAN WHEEL BASE 5 53 = 119 WB 13 = 119 WB 05 = CAB CHASSIS WHEEL BASE 5 03 = CAB CHASSIS WHEEL BASE 3	EG2 = 3.5L V6 Gas Engine EXM = 3.0L V6 Turbo Diesel Engine	DGZ = 5-Speed Auto W5A380 Transmission

Hood And Related Parts
Figure 60-405

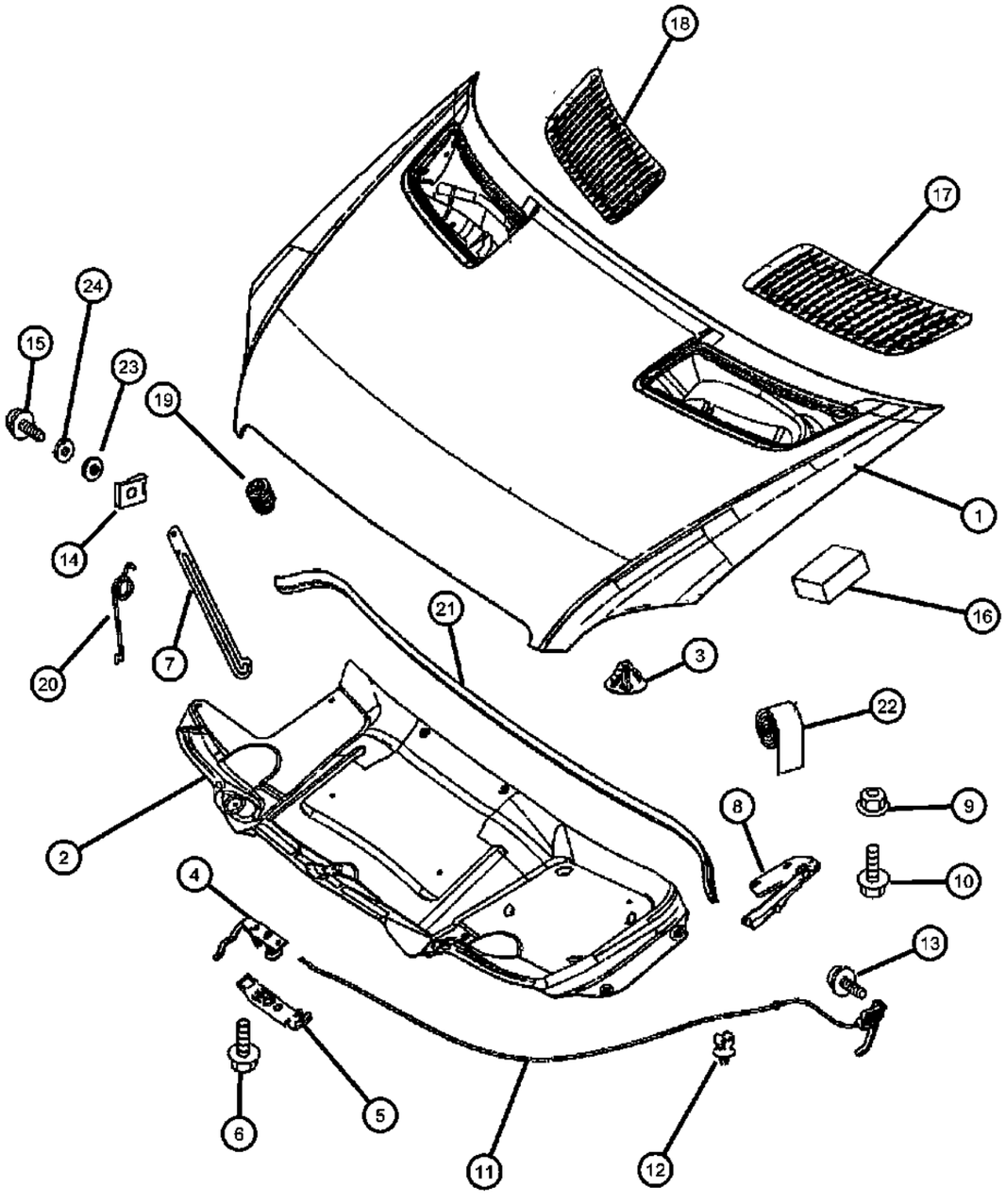

ITEM	PART NUMBER	QTY	LINE	SERIES	BODY	ENGINE	TRANS	TRIM	DESCRIPTION
1	68009834AA	1	2, 3, 6, 7						HOOD
2	68009866AA	1	2, 3, 6, 7						INSULATION, Hood
3									RIVET
	68009867AA	12	2, 3, 6, 7		13, 15, 17, 53, 55				
		12	3, 7		03, 05				
4									LATCH, Hood
	68009851AA	1	2, 3, 6, 7		13, 15, 17, 53, 55				
		1	3, 7		03, 05				
5									LATCH, Hood
	68009852AA	1	2, 3, 6, 7		13, 15, 17, 53, 55				
		1	3, 7		03, 05				
6									BOLT, Hex Flange Head, M6X1.0X30.00
	06104124AA	2	2, 3, 6, 7		13, 15, 17, 53, 55				
		2	3, 7		03, 05				
7	68009856AA	1	2, 3, 6, 7						PROP, Hood
8									HINGE, Hood
	68009848AA	1	2, 3, 6, 7		13, 15, 17, 53, 55				Left
		1	3, 7		03, 05				Left
	68009849AA	1	2, 3, 6, 7		13, 15, 17, 53, 55				Right
		1	3, 7		03, 05				Right
9									NUT
	06105169AA	2	3, 7		03, 05				
		2	2, 3, 6, 7		13, 15, 17, 53, 55				
10	06104153AA	2	2, 3, 6, 7		13, 15, 17, 53, 55				SCREW
11									CABLE, Hood Release
	68009853AA	1	2, 3, 6, 7		13, 15, 17, 53, 55				
		1	3, 7		03, 05				
12	68009854AA	1	2, 3, 6, 7						RETAINER

SPRINTER (VB)

SERIES	LINE	BODY	ENGINE	TRANSMISSION
L = LOWLINE	3 = HD DODGE 2WD 6 = Lt. Duty DODGE 4WD 2 = Med. Duty DODGE 2WD 7 = Med. Duty DODGE 4WD	17 = VAN WHEEL BASE 7 55 = WAGON WHEEL BASE 5 15 = VAN WHEEL BASE 5 53 = 119 WB 13 = 119 WB 05 = CAB CHASSIS WHEEL BASE 5 03 = CAB CHASSIS WHEEL BASE 3	EG2 = 3.5L V6 Gas Engine EXM = 3.0L V6 Turbo Diesel Engine	DGZ = 5-Speed Auto W5A380 Transmission

Hood And Related Parts
Figure 60-405

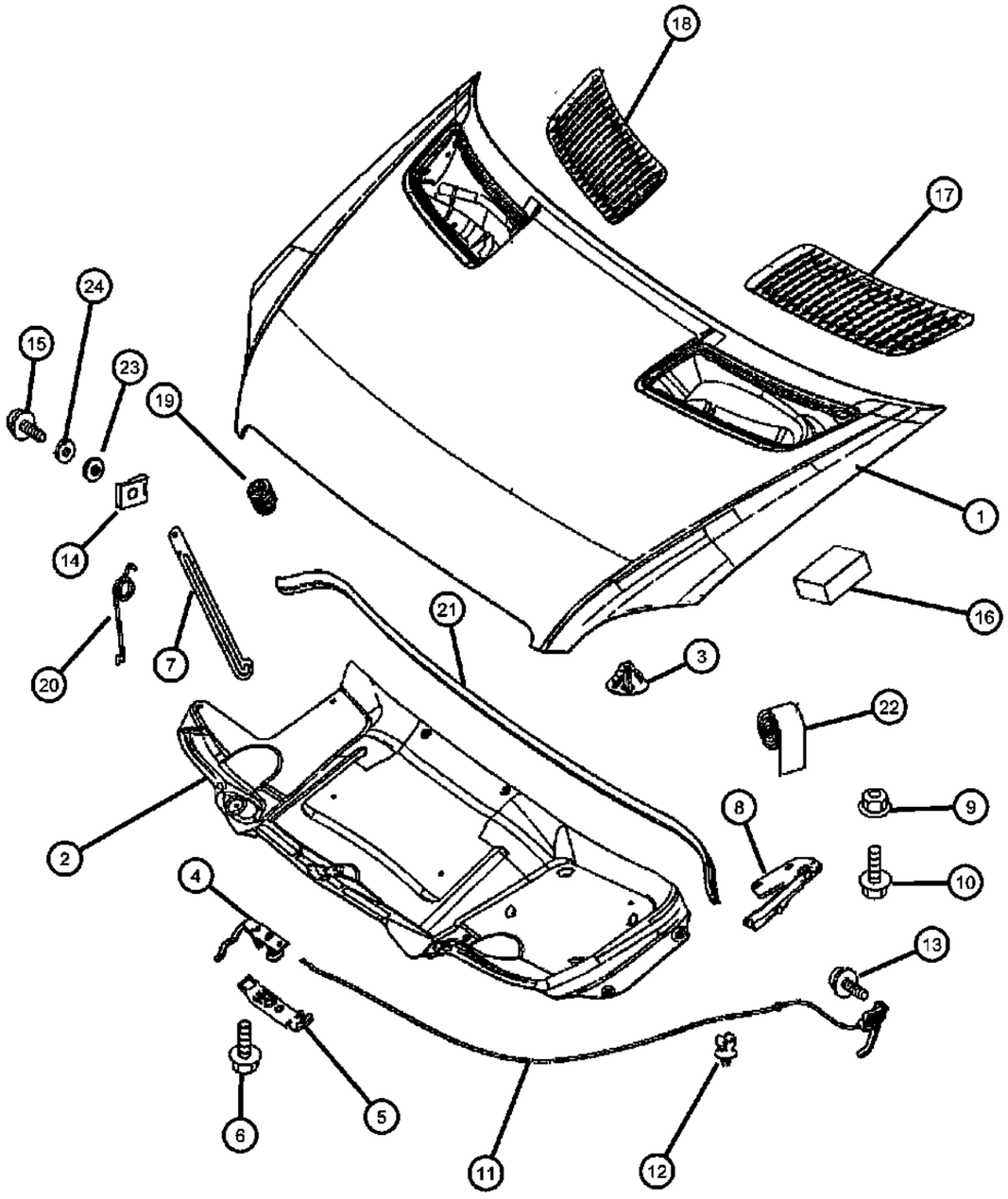

ITEM	PART NUMBER	QTY	LINE	SERIES	BODY	ENGINE	TRANS	TRIM	DESCRIPTION
13	06104666AA	2	2, 3, 6, 7						SCREW
14	05126111AA	1	2, 3, 6, 7						CLIP, Hood
15	06104666AA	1	6, 7, 2, 3						SCREW
16									INSULATOR
	68014291AA	1	2, 3, 6, 7		13, 15, 17, 53, 55				
		1	3, 7		03, 05				
17	1GY46DX9AA	1	2, 3, 6, 7						GRILLE, HoodLeft
18	1GY47DX9AA	1	2, 3, 6, 7						GRILLE, HoodRight
19	68009862AA	4	2, 3, 6, 7						BUMPER, Hood
20									SPRING
	05104546AA	1	2, 3, 6, 7		13, 15, 17, 53, 55				
		1	3, 7		03, 05				
21	68009861AA	1	2, 3, 6, 7						SEAL, Hood
22	68009864AA	AR	2, 3, 6, 7						TAPE
23	68009864AA	AR							BUSHING, (NOT SERVICED)
24	68009860AA	2	2, 3, 6, 7						WASHER
-25	68018131AA	1	2, 3, 6, 7						WASHER

SPRINTER (VB)

SERIES	LINE	BODY	ENGINE	TRANSMISSION
L = LOWLINE	3 = HD DODGE 2WD 6 = Lt. Duty DODGE 4WD 2 = Med. Duty DODGE 2WD 7 = Med. Duty DODGE 4WD	17 = VAN WHEEL BASE 7 55 = WAGON WHEEL BASE 5 15 = VAN WHEEL BASE 5 53 = 119 WB 13 = 119 WB 05 = CAB CHASSIS WHEEL BASE 5 03 = CAB CHASSIS WHEEL BASE 3	EG2 = 3.5L V6 Gas Engine EXM = 3.0L V6 Turbo Diesel Engine	DGZ = 5-Speed Auto W5A380 Transmission

AR = use ase required - = Non illustrrated part

<< RETURN TO GROUP INDEX

Cowel Panel
Figure 60-505

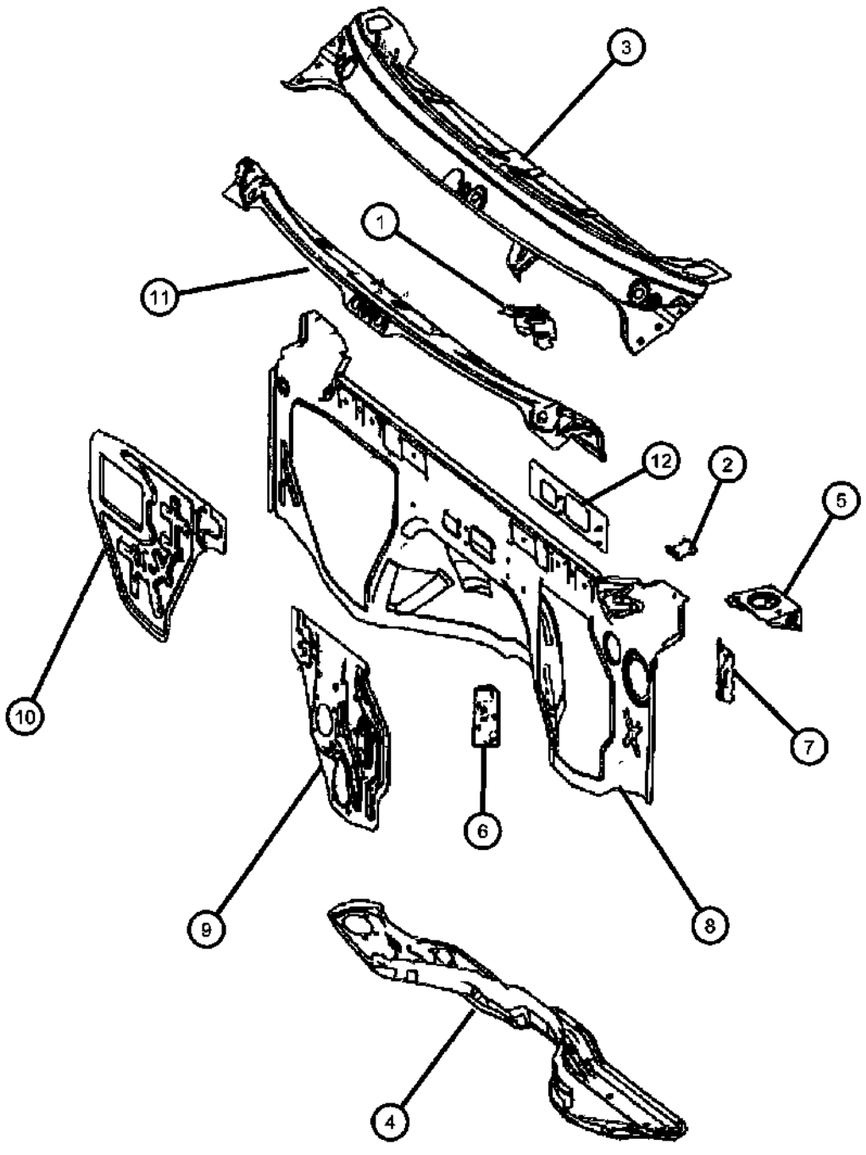

ITEM	PART NUMBER	QTY	LINE	SERIES	BODY	ENGINE	TRANS	TRIM	DESCRIPTION
1	68006310AA	1	2, 3, 6, 7						BRACKET, Cowl Top
2	68006311AA	4	2, 3, 6, 7						REINFORCEMENT
3	68006316AA	1	2, 3, 6, 7						PANEL, Cowl Top
4	68006322AA	1	2, 3, 6, 7						PANEL, Dash
5	68006323AA	1	2, 3, 6, 7						BRACKET, Sensor
6	68006325AA	2	2, 3, 6, 7						BRACKET
7	68006326AA	1	2, 3, 6, 7						BRACKET, Pedal
8	68006306AA	1	2, 3, 6, 7						PANEL, Dash
9	68006304AA	1	2, 3, 6, 7						PANEL, DashLower
10	68006307AA	1	2, 3, 6, 7						PANEL, Dash
11	68006309AA	1	3, 6, 7, 2						PANEL, Cowl Top
12	68006314AA	1	2, 3, 6, 7						PLATE

SPRINTER (VB)

SERIES	LINE	BODY	ENGINE	TRANSMISSION
L = LOWLINE	3 = HD DODGE 2WD 6 = Lt. Duty DODGE 4WD 2 = Med. Duty DODGE 2WD 7 = Med. Duty DODGE 4WD	17 = VAN WHEEL BASE 7 55 = WAGON WHEEL BASE 5 15 = VAN WHEEL BASE 5 53 = 119 WB 13 = 119 WB 05 = CAB CHASSIS WHEEL BASE 5 03 = CAB CHASSIS WHEEL BASE 3	EG2 = 3.5L V6 Gas Engine EXM = 3.0L V6 Turbo Diesel Engine	DGZ = 5-Speed Auto W5A380 Transmission

Dash Panel
Figure 60-550

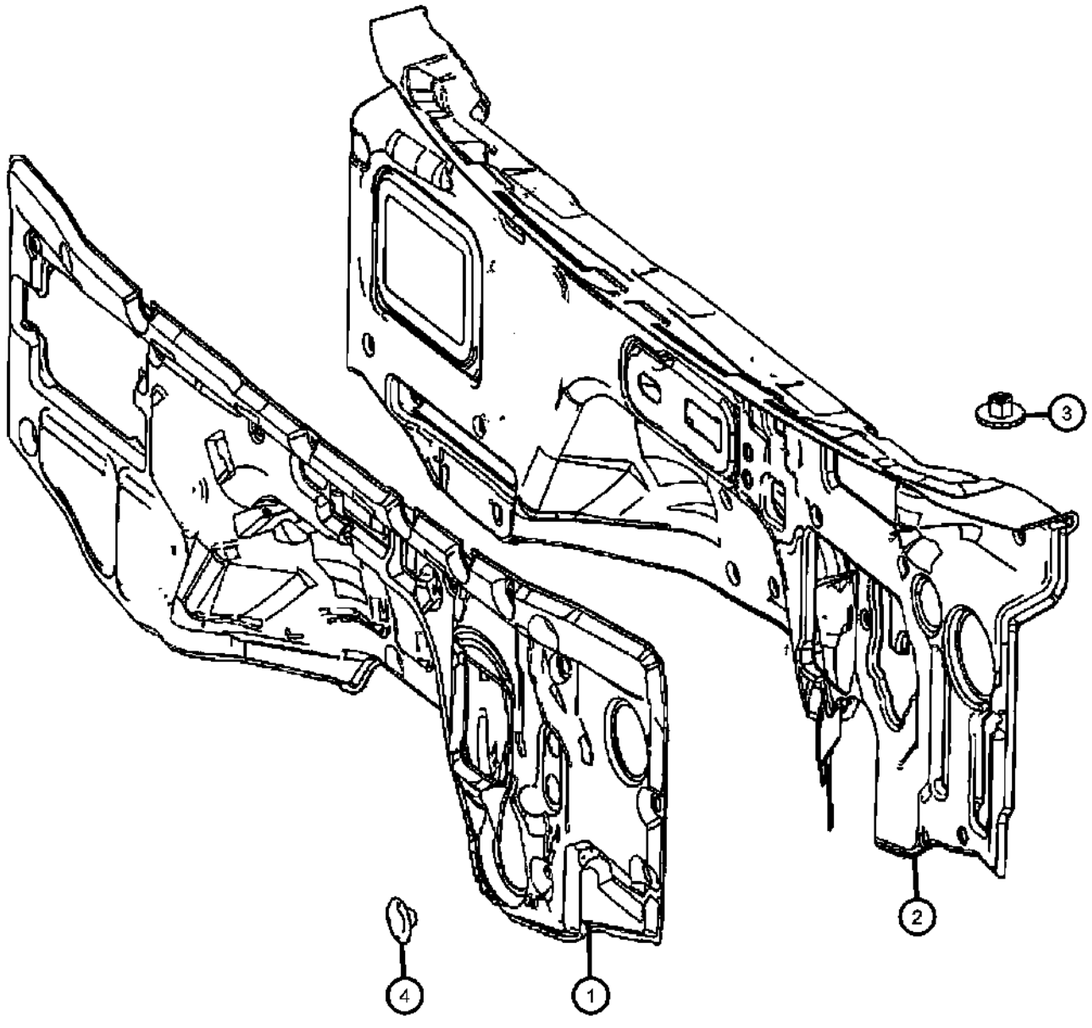

ITEM	PART NUMBER	QTY	LINE	SERIES	BODY	ENGINE	TRANS	TRIM	DESCRIPTION
1	68004961AA	1	2, 3, 6, 7						SILENCER, Dash Panel, Fire Wall
2	68006367AA	1	2, 3, 6, 7						SILENCER, Dash Panel, Fire Wall
3									SNAP
	05097042AA	11	3, 7		03, 05				
		11	2, 3, 6, 7		13, 15, 17, 53, 55				
4									PLUG, Button
	05097041AA	7	3, 7		03, 05				
		7	2, 3, 6, 7		13, 15, 17, 53, 55				

SPRINTER (VB)

SERIES	LINE	BODY	ENGINE	TRANSMISSION
L = LOWLINE	3 = HD DODGE 2WD 6 = Lt. Duty DODGE 4WD 2 = Med. Duty DODGE 2WD 7 = Med. Duty DODGE 4WD	17 = VAN WHEEL BASE 7 55 = WAGON WHEEL BASE 5 15 = VAN WHEEL BASE 5 53 = 119 WB 13 = 119 WB 05 = CAB CHASSIS WHEEL BASE 5 03 = CAB CHASSIS WHEEL BASE 3	EG2 = 3.5L V6 Gas Engine EXM = 3.0L V6 Turbo Diesel Engine	DGZ = 5-Speed Auto W5A380 Transmission

Dash Panel
Figure 60-555

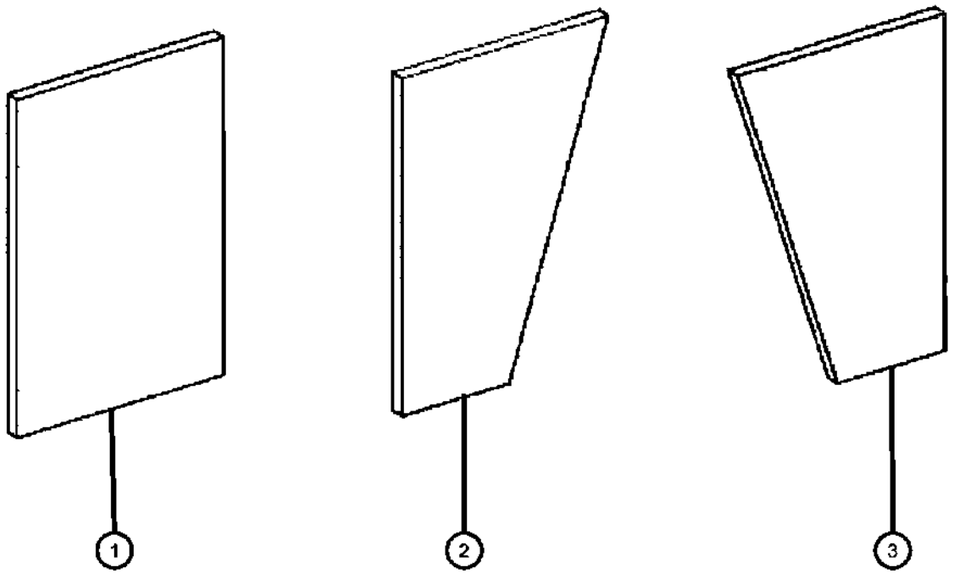

ITEM	PART NUMBER	QTY	LINE	SERIES	BODY	ENGINE	TRANS	TRIM	DESCRIPTION
1									INSULATION
	68010358AA	4	2, 3, 6, 7		15, 55				
		6	2, 3, 6, 7		17				
		3	2, 3, 6, 7		13, 53				
2	68014724AA	1	2, 3, 6, 7		13, 15, 17, 53, 55				INSULATOR
3	68014726AA	1	2, 3, 6, 7		13, 15, 17, 53, 55				INSULATION

SPRINTER (VB)

SERIES	LINE	BODY	ENGINE	TRANSMISSION
L = LOWLINE	3 = HD DODGE 2WD 6 = Lt. Duty DODGE 4WD 2 = Med. Duty DODGE 2WD 7 = Med. Duty DODGE 4WD	17 = VAN WHEEL BASE 7 55 = WAGON WHEEL BASE 5 15 = VAN WHEEL BASE 5 53 = 119 WB 13 = 119 WB 05 = CAB CHASSIS WHEEL BASE 5 03 = CAB CHASSIS WHEEL BASE 3	EG2 = 3.5L V6 Gas Engine EXM = 3.0L V6 Turbo Diesel Engine	DGZ = 5-Speed Auto W5A380 Transmission

Passenger Compartment Damping
Figure 60-560

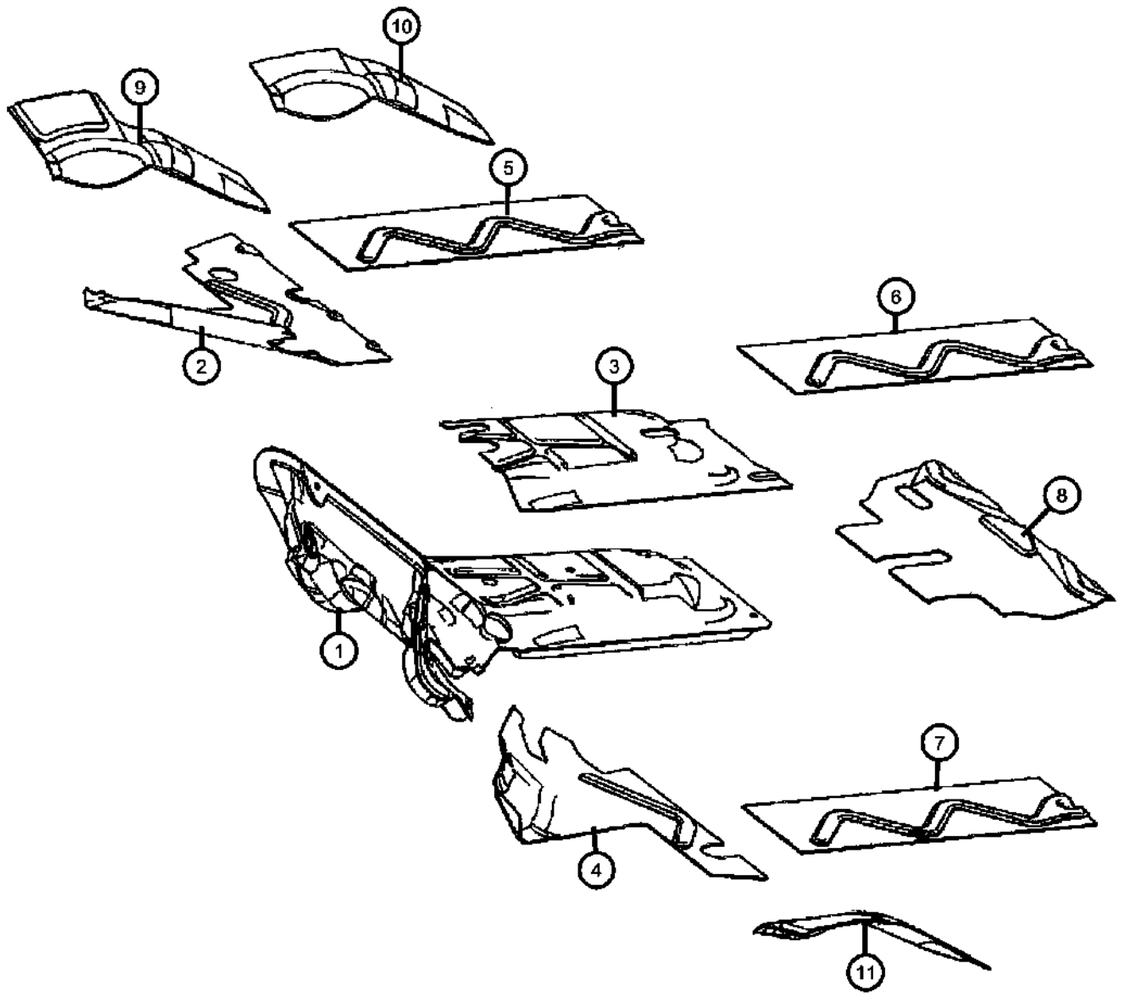

ITEM	PART NUMBER	QTY	LINE	SERIES	BODY	ENGINE	TRANS	TRIM	DESCRIPTION
1	68006365AA	1	2, 3, 6, 7						INSULATION, Transmission Tunnel
2									INSULATION
	68006372AA	1	2, 3, 6, 7						Front Right
	68006379AA	1	2, 3, 6, 7						Right Inside
3	68006373AA	1	2, 3, 6, 7						INSULATION, Front Central
4									INSULATION
	68006371AA	1	2, 3, 6, 7						Front Left
	68006378AA	1	2, 3, 6, 7						Left Inside
5	68006370AA	1	2, 3, 6, 7						INSULATION, Left Entrance-Cut to Fit
6	68006370AA	1	2, 3, 6, 7						INSULATION, Central Right-Cut to Fit
7	68006370AA	1	2, 3, 6, 7						INSULATION, Left-Cut to Fit
8	68006368AA	1	2, 3, 6, 7		13, 15, 17, 53, 55				INSULATION, Rear
9	68006375AA	1	2, 3, 6, 7						INSULATION, Right Outside
10	68006377AA	1	2, 3, 6, 7						INSULATION, Right Outside
11	68006376AA	1	2, 3, 6, 7						INSULATION, Left Outside

SPRINTER (VB)

SERIES	LINE	BODY	ENGINE	TRANSMISSION
L = LOWLINE	3 = HD DODGE 2WD 6 = Lt. Duty DODGE 4WD 2 = Med. Duty DODGE 2WD 7 = Med. Duty DODGE 4WD	17 = VAN WHEEL BASE 7 55 = WAGON WHEEL BASE 5 15 = VAN WHEEL BASE 5 53 = 119 WB 13 = 119 WB 05 = CAB CHASSIS WHEEL BASE 5 03 = CAB CHASSIS WHEEL BASE 3	EG2 = 3.5L V6 Gas Engine EXM = 3.0L V6 Turbo Diesel Engine	DGZ = 5-Speed Auto W5A380 Transmission

Front Aperture Panel
Figure 60-605

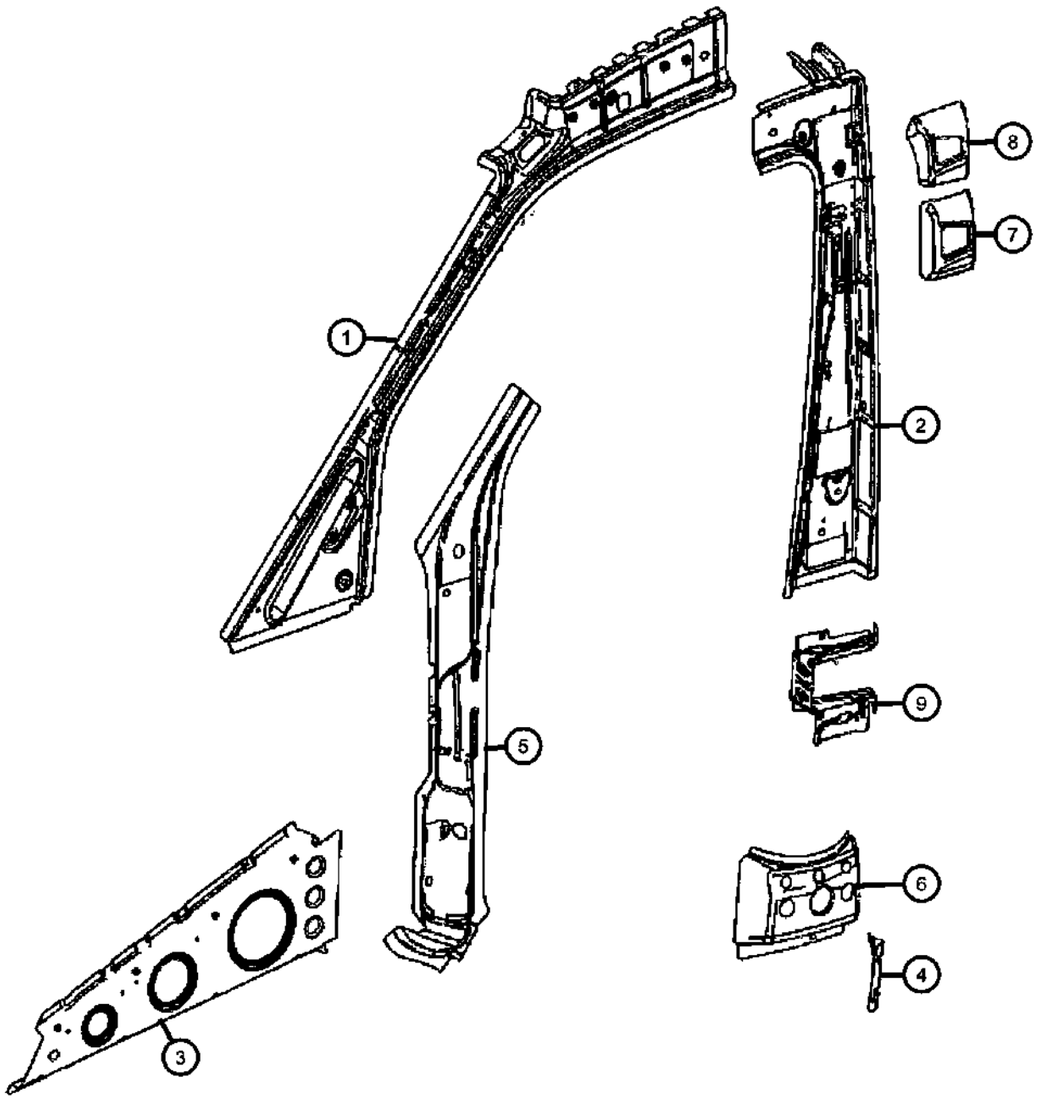

ITEM	PART NUMBER	QTY	LINE	SERIES	BODY	ENGINE	TRANS	TRIM	DESCRIPTION
1	68005113AA	1	2, 3, 6, 7						PANEL, A PillarTop, Left
2									PANEL, B Pillar
	68008693AA	1	2, 3, 6, 7		13, 15, 17, 53, 55				Without [GKE], Left
	68008694AA	1	6, 7, 2, 3		13, 15, 17, 53, 55				With [MWJ or MX1 or MX2], Left
	68008697AA	1	2, 3, 6, 7		13, 15, 17, 53, 55				With [CTA] With [MWJ or MX1 or MX2], Left
	68029947AA	1	2, 3, 6, 7		13, 15, 17, 53, 55				With [MX1 or MX2] Without [GKE], Left
	68029948AA	1	2, 3, 6, 7		13, 15, 17, 53, 55				With [CTA] With [MX1 or MX2] Without [GKE], Left
3	68008424AA	1	2, 3, 6, 7						REINFORCEMENT, Cowl Side, Side Member, Front Left
4	68008521AA	1	2, 3, 6, 7		13, 15, 17, 53, 55				BRACKET, Angle B-Pillar on the Left
5	68008425AA	1	2, 3, 6, 7						PANEL, Cowl Side, Left Hinge Reinforcement
6	68008524AA	1	2, 3, 6, 7		13, 15, 17, 53, 55				REINFORCEMENT, Locking Wedge,Bottom-With [GKE], Left
7	68008527AA	1	2, 3, 6, 7		13, 15, 17				REINFORCEMENT, B-Pillar, Locking Wedge Top-With [GKE], Left
8	68008526AA	1	2, 3, 6, 7		13, 15, 17				REINFORCEMENT, B-Pillar, Locking Wedge Top-With [MWJ or MX1 or MX2] With [GKE], Left
9	68008530AA	1	2, 3, 6, 7		13, 15, 17, 53, 55				PILLAR, Front Door Lock, Locking Eye, Left

SPRINTER (VB)

SERIES	LINE	BODY	ENGINE	TRANSMISSION
L = LOWLINE	3 = HD DODGE 2WD 6 = Lt. Duty DODGE 4WD 2 = Med. Duty DODGE 2WD 7 = Med. Duty DODGE 4WD	17 = VAN WHEEL BASE 7 55 = WAGON WHEEL BASE 5 15 = VAN WHEEL BASE 5 53 = 119 WB 13 = 119 WB 05 = CAB CHASSIS WHEEL BASE 5 03 = CAB CHASSIS WHEEL BASE 3	EG2 = 3.5L V6 Gas Engine EXM = 3.0L V6 Turbo Diesel Engine	DGZ = 5-Speed Auto W5A380 Transmission

Front Aperture Panel
Figure 60-606

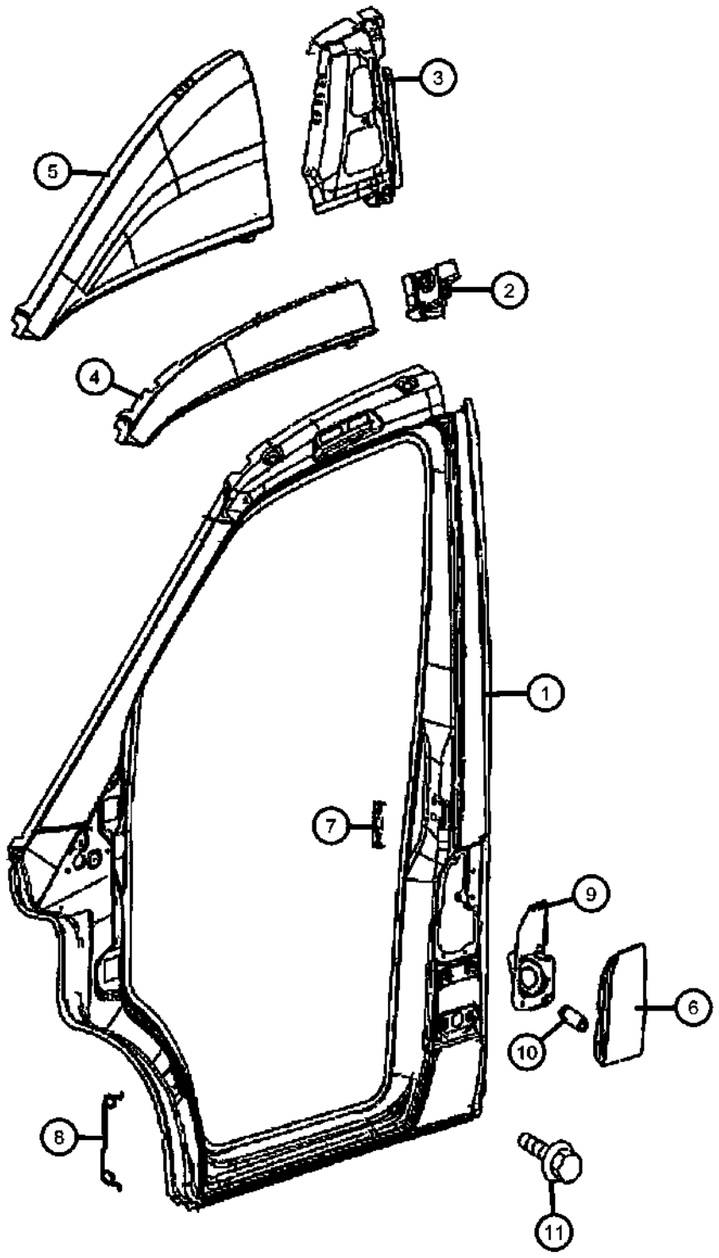

ITEM	PART NUMBER	QTY	LINE	SERIES	BODY	ENGINE	TRANS	TRIM	DESCRIPTION
1									APERTURE, Body Side Door
	68008451AA	1	2, 3, 6, 7		13, 15, 17, 53, 55				Without [MWJ or MX1 or MX2], Left
	68008452AA	1	2, 3, 6, 7		13, 15, 17, 53, 55				With [MWJ or MX1 or MX2], Left
2									BRACKET, B-Pillar
	68005109AA	1	2, 3, 6, 7		13, 15, 17, 53, 55				B-Pillar With [GKE], Top, Left
	68005110AA	1	2, 3, 6, 7		13, 15, 17, 53, 55				B-Pillar Without [GKE], Top, Left
3									PANEL, Body Side Aperture
	68008495AA	1	2, 3, 6, 7		13, 15, 17, 53, 55				B-Pillar With [MWJ or MX1 or MX2] + [GKE], Top, Left
	68008496AA	1	2, 3, 6, 7		13, 15, 17, 53, 55				B-Pillar With [MWJ or MX1 or MX2], Top, Left
4	68008512AA	1	2, 3, 6, 7		13, 15, 17, 53, 55				PANEL, Roof, Roof Left Front Rail Without [MWJ or MX1 or MX2]
5	68008513AA	1	2, 3, 6, 7		13, 15, 17, 53, 55				PANEL, Roof, Roof Left Front Rail With [MWJ or MX1 or MX2]
6	68008440AA	1	2, 3, 6, 7						DOOR, Fuel Fill
7	68008443AA	1	2, 3, 6, 7						BRACKET, Fuel Fill Door
8									SPRING, Fuel Filler Door
	05104408AA	1	3, 7		03, 05				
		1	2, 3, 6, 7		13, 15, 17, 53, 55				
9		1							FILLER, Fuel Filler Tube Mounting, (NOT SERVICED)
10	68008447AA	2	2, 3, 6, 7						BUMPER, Fuel Door
11	06104120AA	6	7, 2, 3, 6						SCREW, Hex Head, M6x12, Fuel Fill Door, Mounting

SPRINTER (VB)

SERIES	LINE	BODY	ENGINE	TRANSMISSION
L = LOWLINE	3 = HD DODGE 2WD 6 = Lt. Duty DODGE 4WD 2 = Med. Duty DODGE 2WD 7 = Med. Duty DODGE 4WD	17 = VAN WHEEL BASE 7 55 = WAGON WHEEL BASE 5 15 = VAN WHEEL BASE 5 53 = 119 WB 13 = 119 WB 05 = CAB CHASSIS WHEEL BASE 5 03 = CAB CHASSIS WHEEL BASE 3	EG2 = 3.5L V6 Gas Engine EXM = 3.0L V6 Turbo Diesel Engine	DGZ = 5-Speed Auto W5A380 Transmission

Front Aperture Panel
Figure 60-607

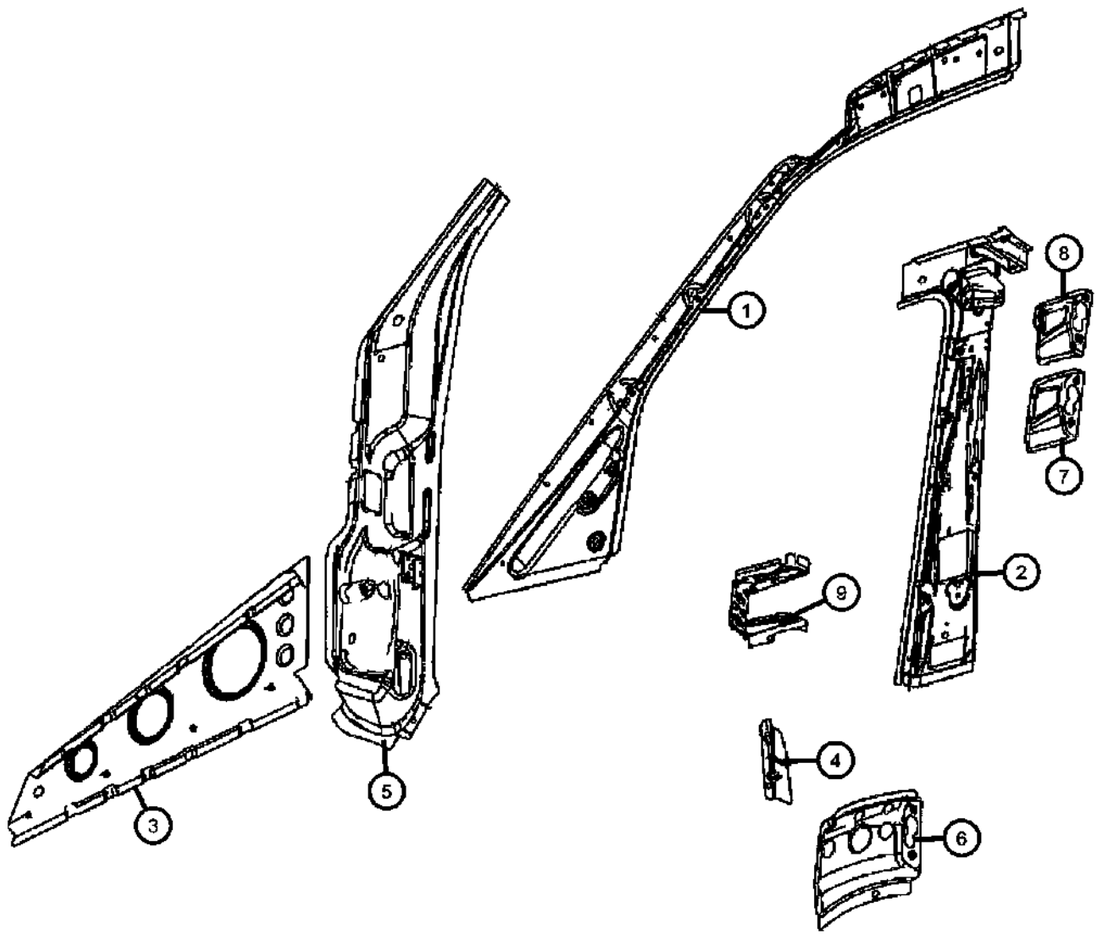

ITEM	PART NUMBER	QTY	LINE	SERIES	BODY	ENGINE	TRANS	TRIM	DESCRIPTION
1	68005138AA	1	2, 3, 6, 7						PANEL, A PillarTop, Right
2									PANEL, B-Pillar
	68008696AA	1	2, 3, 6, 7						With [CTA+MWJ Or MX2 Or MX1]
	68009312AA	1	2, 3, 6, 7		13, 15, 17				With [GK9], Right
	68009313AA	1	2, 3, 6, 7		13, 15, 17, 53, 55				With [MWJ or MX1 or MX2] +[GK9], Right
	68029941AA	1	2, 3, 6, 7		13, 15, 17, 53, 55				With [MX1 or MX2] Without [GKA], Right
	68029946AA	1	2, 3, 6, 7		13, 15, 17, 53, 55				With [CTA]+MX1 or MX2] Without [GKA], Right
3	68009199AA	1	2, 3, 6, 7						REINFORCEMENT, Cowl Side, Side Member, Front, Right
4	68009208AA	1	2, 3, 6, 7		13, 15, 17, 53, 55				BRACKET, Angel B Pillar on the Right With [GK9]
5	68009200AA	1	2, 3, 6, 7						PANEL, Cowl Side, Right Hinge Reinforcement
6	68009202AA	1	2, 3, 6, 7		13, 15, 17, 53, 55				REINFORCEMENT, Locking Wedge Bottom With [GKA], Right
7	68009205AA	1	2, 3, 6, 7		13, 15, 17, 53, 55				REINFORCEMENT, B-Pillar, Locking Wedge Top With [GKA], Right
8	68009204AA	1	2, 3, 6, 7		13, 15, 17, 53, 55				REINFORCEMENT, B-Pillar, Locking Wedge Top With [MWJ or MX1 or MX2] With [GKA], Right
9	68009209AA	1	2, 3, 6, 7		13, 15, 17, 53, 55				PILLAR, Front Door Lock, Locking Eye Without [MWJ or MX1 or MX2] With [GKA], Right

SPRINTER (VB)

SERIES	LINE	BODY	ENGINE	TRANSMISSION
L = LOWLINE	3 = HD DODGE 2WD 6 = Lt. Duty DODGE 4WD 2 = Med. Duty DODGE 2WD 7 = Med. Duty DODGE 4WD	17 = VAN WHEEL BASE 7 55 = WAGON WHEEL BASE 5 15 = VAN WHEEL BASE 5 53 = 119 WB 13 = 119 WB 05 = CAB CHASSIS WHEEL BASE 5 03 = CAB CHASSIS WHEEL BASE 3	EG2 = 3.5L V6 Gas Engine EXM = 3.0L V6 Turbo Diesel Engine	DGZ = 5-Speed Auto W5A380 Transmission

Front Aperture Panel
Figure 60-608

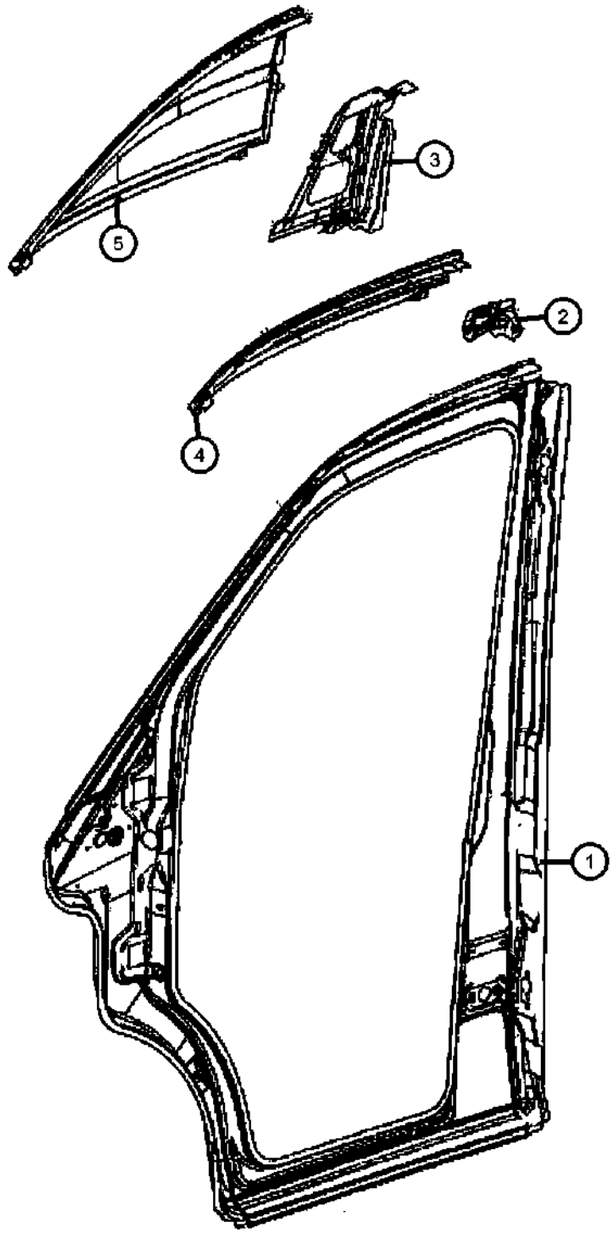

ITEM	PART NUMBER	QTY	LINE	SERIES	BODY	ENGINE	TRANS	TRIM	DESCRIPTION
1									APERTURE, Body Side Door
	68009141AA	1	2, 3, 6, 7		13, 15, 17, 53, 55				Without [MWJ or MX1 or MX2], Right
	68009142AA	1	2, 3, 6, 7		13, 15, 17, 53, 55				With [MWJ or MX1 or MX2], Right
2									BRACKET, B-Pillar
	68005134AA	1	2, 3, 6, 7		13, 15, 17, 53, 55				B-Pillar With [GKA], Top, Right
	68009211AA	1	2, 3, 6, 7		13, 15, 17, 53, 55				B-Pillar Without [GKA], Top, Right
3									PANEL, Body Side Aperture
	68005136AA	1	2, 3, 6, 7		13, 15, 17, 53, 55				With [MWJ or MX1 or MX2] + [GK9], Top, Right
	68005137AA	1	2, 3, 6, 7		13, 15, 17, 53, 55				Without [MWJ or MX1 or MX2], Top, Right
4	68009188AA	1	2, 3, 6, 7		13, 15, 17, 53, 55				PANEL, Roof, Right Front Roof Rail Without [MWJ or MX1 or MX2]
5	68009189AA	1	2, 3, 6, 7		13, 15, 17, 53, 55				PANEL, Roof, Right Front Roof Rail With [MWJ or MX1 or MX2]

SPRINTER (VB)

SERIES	LINE	BODY	ENGINE	TRANSMISSION
L = LOWLINE	3 = HD DODGE 2WD 6 = Lt. Duty DODGE 4WD 2 = Med. Duty DODGE 2WD 7 = Med. Duty DODGE 4WD	17 = VAN WHEEL BASE 7 55 = WAGON WHEEL BASE 5 15 = VAN WHEEL BASE 5 53 = 119 WB 13 = 119 WB 05 = CAB CHASSIS WHEEL BASE 5 03 = CAB CHASSIS WHEEL BASE 3	EG2 = 3.5L V6 Gas Engine EXM = 3.0L V6 Turbo Diesel Engine	DGZ = 5-Speed Auto W5A380 Transmission

Rear Aperture (Quarter) Panel
Figure 60-651

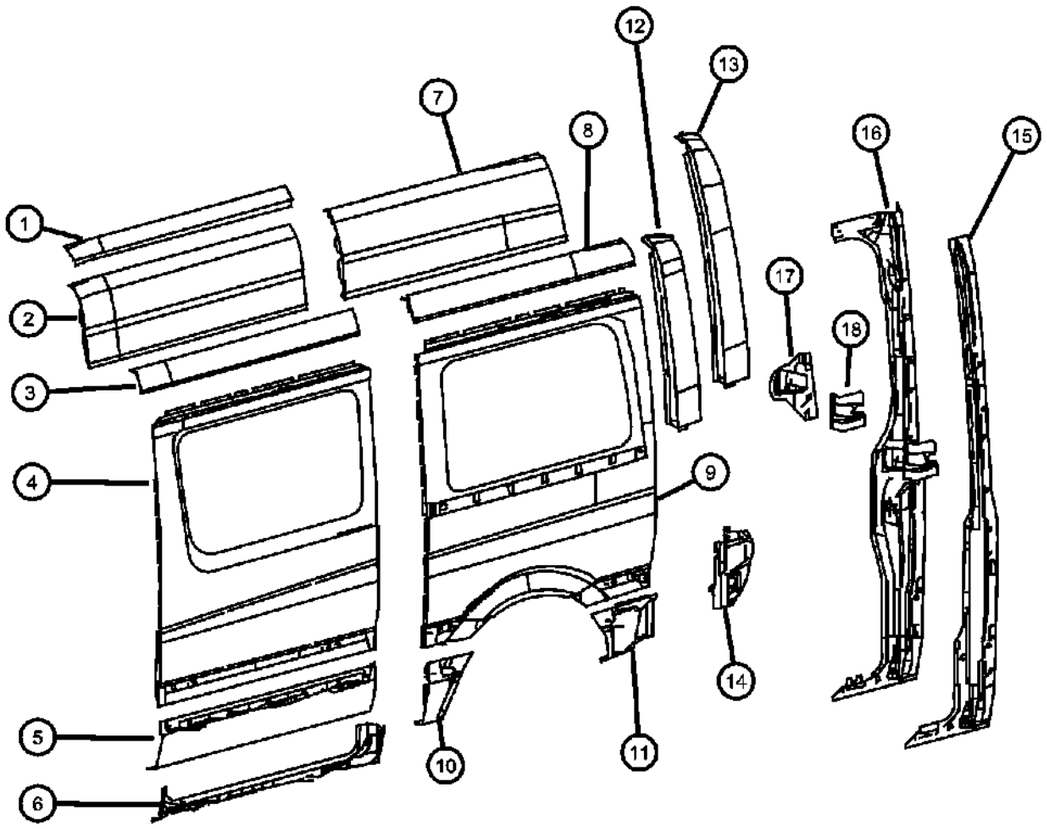

ITEM	PART NUMBER	QTY	LINE	SERIES	BODY	ENGINE	TRANS	TRIM	DESCRIPTION
1	68008503AA	1	2, 3, 6, 7		13, 15, 17, 53, 55				PANEL, Roof
2	68008504AA	1	2, 3, 6, 7		13, 15, 17, 53, 55				PANEL, Roof
3	68008511AA	1	2, 3, 6, 7		13, 53				PANEL, Roof
4	68008462AA	1	7, 2, 3, 6		13, 15, 17, 53, 55				PANEL, Body Side
5	68008493AA	1	2, 3, 6, 7		13, 15, 17, 53, 55				ROCKER
6	68008519AA	1	2, 3, 6, 7		13, 15, 17, 53, 55				PANEL, Sill
7									PANEL, Roof
	68008512AA	1	2, 3, 6, 7		13, 15, 17, 53, 55				
	68008516AA	1	2, 3, 6, 7		13, 53				[5CF]
	68008518AA	1	2, 3, 6, 7		15, 55				[5CG]
8	68008517AA	1	2, 3, 6, 7		13, 53				PANEL, Roof
9	68008517AA	1							PANEL, Body Side Rear, (NOT SERVICED)
10									PANEL, Wheelhouse
	68008466AA	1	2, 3, 6, 7		13, 53				[5CF]
	68008467AA	1	2, 3, 6, 7		15, 17, 55				
11									PANEL, Wheelhouse
	68008489AA	1	2, 3, 6, 7		13, 53				[5CF]
	68008490AA	1	2, 3, 6, 7		15, 55				[5CG]
12	68008531AA	1	2, 3, 6, 7		13, 15, 17, 53, 55				PANEL, D Pillar, Side Panel Outside D_Pillar
13	68008532AA	1	2, 3, 6, 7		13, 15, 17, 53, 55				PANEL, D Pillar
14	68008533AA	1	2, 3, 6, 7		13, 15, 17, 53, 55				EXTENSION, D Pillar Lower
15									PANEL, D Pillar
	68008669AA	1	2, 3, 6, 7		13, 15, 17, 53, 55				
	68008671AA	1	2, 3, 6, 7		13, 15, 17, 53, 55				High or Super High Roof
16									PILLAR, Side Cargo Door
	68008667AA	1	2, 3, 6, 7		13, 15, 17, 53, 55				High Roof and Super High Roof

SPRINTER (VB)

SERIES	LINE	BODY	ENGINE	TRANSMISSION
L = LOWLINE	3 = HD DODGE 2WD 6 = Lt. Duty DODGE 4WD 2 = Med. Duty DODGE 2WD 7 = Med. Duty DODGE 4WD	17 = VAN WHEEL BASE 7 55 = WAGON WHEEL BASE 5 15 = VAN WHEEL BASE 5 53 = 119 WB 13 = 119 WB 05 = CAB CHASSIS WHEEL BASE 5 03 = CAB CHASSIS WHEEL BASE 3	EG2 = 3.5L V6 Gas Engine EXM = 3.0L V6 Turbo Diesel Engine	DGZ = 5-Speed Auto W5A380 Transmission

Rear Aperture (Quarter) Panel
Figure 60-651

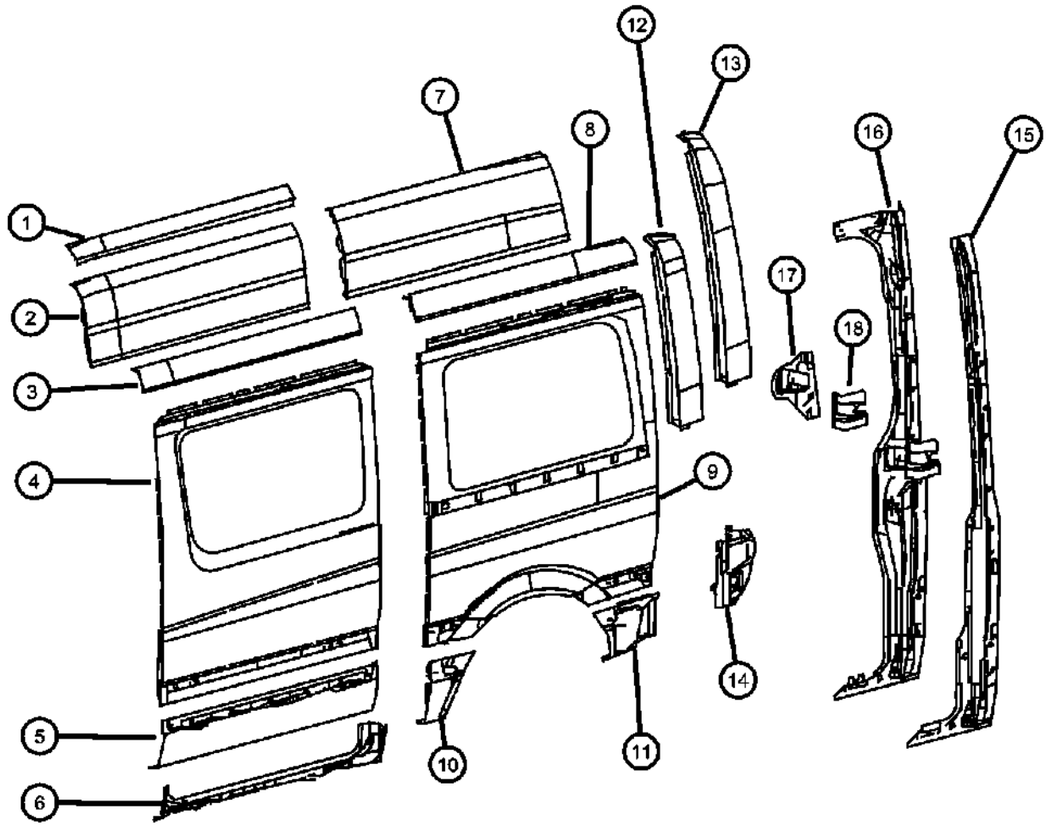

ITEM	PART NUMBER	QTY	LINE	SERIES	BODY	ENGINE	TRANS	TRIM	DESCRIPTION
	68008673AA	1	2, 3, 6, 7		13, 15, 17, 53, 55				Standard
17	68008662AA	1	2, 3, 6, 7		13, 15, 17, 53, 55				PLATE
18	68008665AA	1	7, 2, 3, 6		13, 15, 17, 53, 55				PLATE

SPRINTER (VB)

SERIES	LINE	BODY	ENGINE	TRANSMISSION
L = LOWLINE	3 = HD DODGE 2WD 6 = Lt. Duty DODGE 4WD 2 = Med. Duty DODGE 2WD 7 = Med. Duty DODGE 4WD	17 = VAN WHEEL BASE 7 55 = WAGON WHEEL BASE 5 15 = VAN WHEEL BASE 5 53 = 119 WB 13 = 119 WB 05 = CAB CHASSIS WHEEL BASE 5 03 = CAB CHASSIS WHEEL BASE 3	EG2 = 3.5L V6 Gas Engine EXM = 3.0L V6 Turbo Diesel Engine	DGZ = 5-Speed Auto W5A380 Transmission

Rear Aperture (Quarter) Panel
Figure 60-652

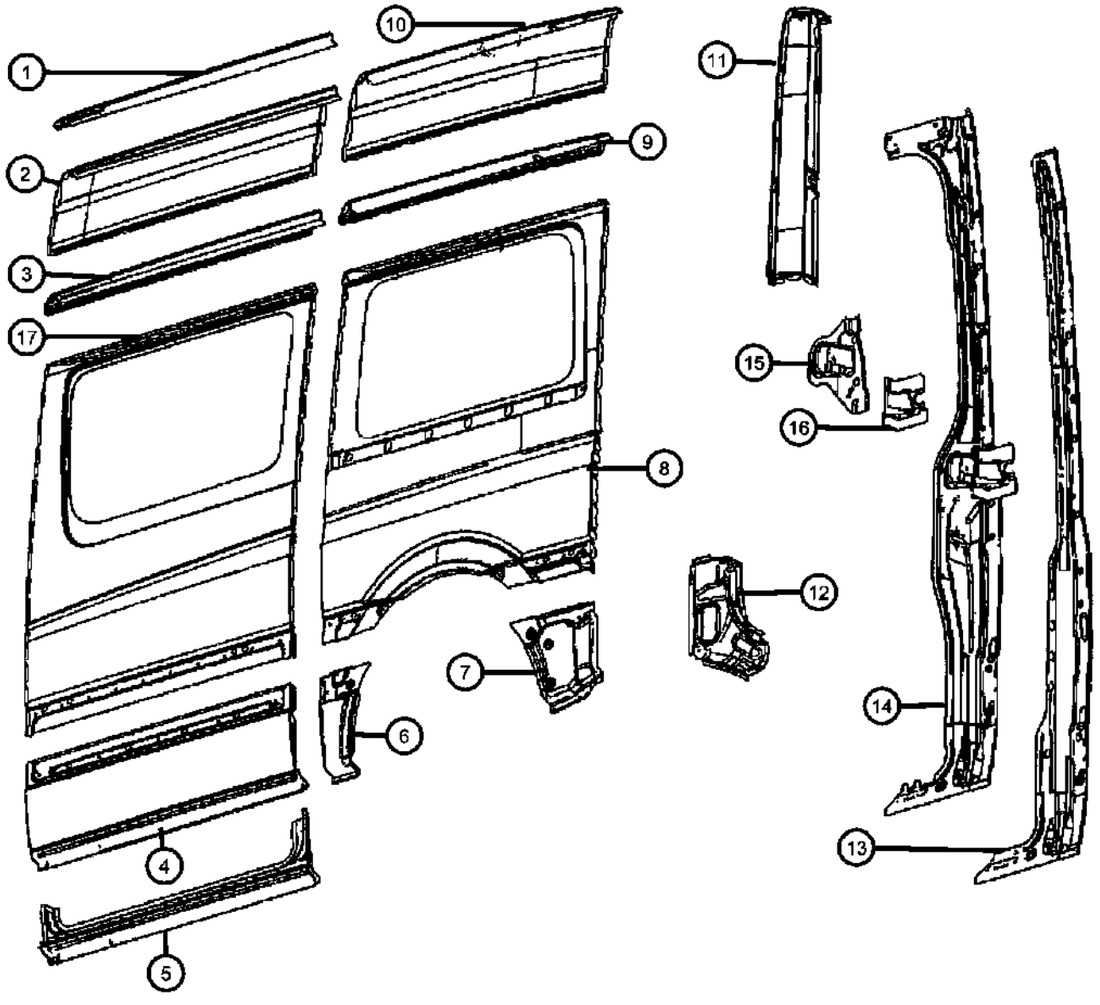

ITEM	PART NUMBER	QTY	LINE	SERIES	BODY	ENGINE	TRANS	TRIM	DESCRIPTION
1	68009182AA	1	2, 3, 6, 7		13, 15, 17, 53, 55				PANEL, Roof
2	68009181AA	1	2, 3, 6, 7		13, 15, 17, 53, 55				PANEL, Roof
3									PANEL, Roof
	68009186AA	1	2, 3, 6, 7		13, 53				
	68009187AA	1	2, 3, 6, 7		13, 15, 17, 53, 55				
4	68009195AA	1	2, 3, 6, 7		13, 15, 17, 53, 55				PANEL, Body Side
5	68009196AA	1	2, 3, 6, 7		13, 15, 17, 53, 55				ROCKER
6	68009157AA	1	2, 3, 6, 7		15, 17, 55				PANEL, Wheelhouse
7									PANEL, Wheelhouse
	68005132AA	1	2, 3, 6, 7		17				
	68008488AA	1	2, 3, 6, 7		13, 53				
	68009177AA	1	2, 3, 6, 7		15, 55				
8	68009177AA	1							PANEL, Rear Body, (NOT SERVICED)
9	68009193AA	1	2, 3, 6, 7		13, 53				PANEL, Roof
10									PANEL, Roof
	68005133AA	1	2, 3, 6, 7		17				
	68009192AA	1	2, 3, 6, 7		13, 53				
	68009194AA	1	2, 3, 6, 7		15, 55				
11	68009194AA	1							PANEL, D Pillar, (NOT SERVICED)
12	68009214AA	1	2, 3, 6, 7		13, 15, 17, 53, 55				REINFORCEMENT
13									PANEL, D Pillar
	68008668AA	1	6, 7, 2, 3		13, 15, 17, 53, 55				
	68008670AA	1	2, 3, 6, 7		13, 15, 17, 53, 55				High and Super High Roof
14									PILLAR, Side Cargo Door
	68008666AA	1	2, 3, 6, 7		13, 15, 17, 53, 55				High and Super High Roof
	68008672AA	1	2, 3, 6, 7		13, 15, 17, 53, 55				
15	68006310AA	1	2, 3, 6, 7						BRACKET

SPRINTER (VB)

SERIES	LINE	BODY	ENGINE	TRANSMISSION
L = LOWLINE	3 = HD DODGE 2WD 6 = Lt. Duty DODGE 4WD 2 = Med. Duty DODGE 2WD 7 = Med. Duty DODGE 4WD	17 = VAN WHEEL BASE 7 55 = WAGON WHEEL BASE 5 15 = VAN WHEEL BASE 5 53 = 119 WB 13 = 119 WB 05 = CAB CHASSIS WHEEL BASE 5 03 = CAB CHASSIS WHEEL BASE 3	EG2 = 3.5L V6 Gas Engine EXM = 3.0L V6 Turbo Diesel Engine	DGZ = 5-Speed Auto W5A380 Transmission

Rear Aperture (Quarter) Panel
Figure 60-652

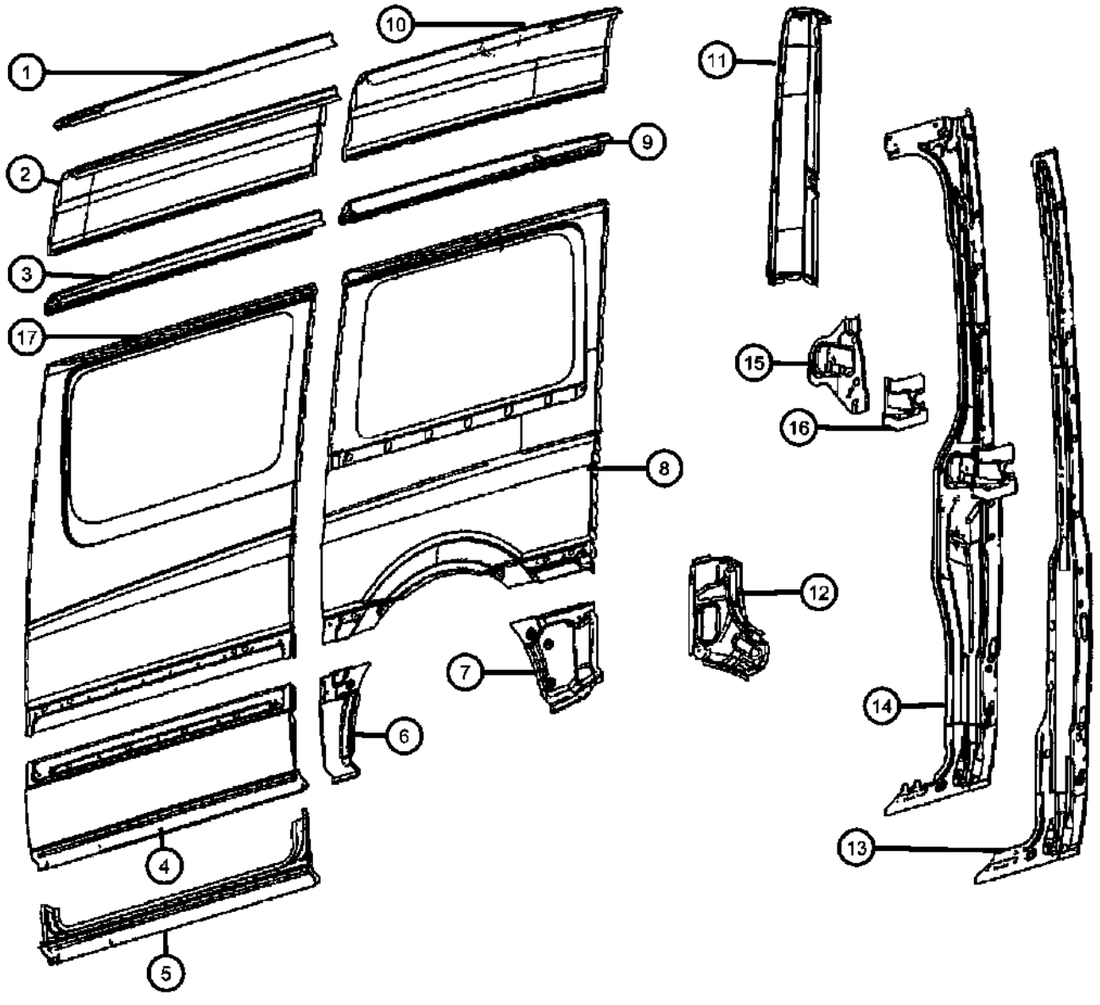

ITEM	PART NUMBER	QTY	LINE	SERIES	BODY	ENGINE	TRANS	TRIM	DESCRIPTION
16	68008664AA	1	2, 3, 6, 7		13, 15, 17, 53, 55				PLATE
17	68009152AA	1	2, 3, 6, 7		13, 15, 17, 53, 55				PANEL, Body Side

SPRINTER (VB)

SERIES	LINE	BODY	ENGINE	TRANSMISSION
L = LOWLINE	3 = HD DODGE 2WD 6 = Lt. Duty DODGE 4WD 2 = Med. Duty DODGE 2WD 7 = Med. Duty DODGE 4WD	17 = VAN WHEEL BASE 7 55 = WAGON WHEEL BASE 5 15 = VAN WHEEL BASE 5 53 = 119 WB 13 = 119 WB 05 = CAB CHASSIS WHEEL BASE 5 03 = CAB CHASSIS WHEEL BASE 3	EG2 = 3.5L V6 Gas Engine EXM = 3.0L V6 Turbo Diesel Engine	DGZ = 5-Speed Auto W5A380 Transmission

Rear Aperture (Quarter) Panel
Figure 60-653

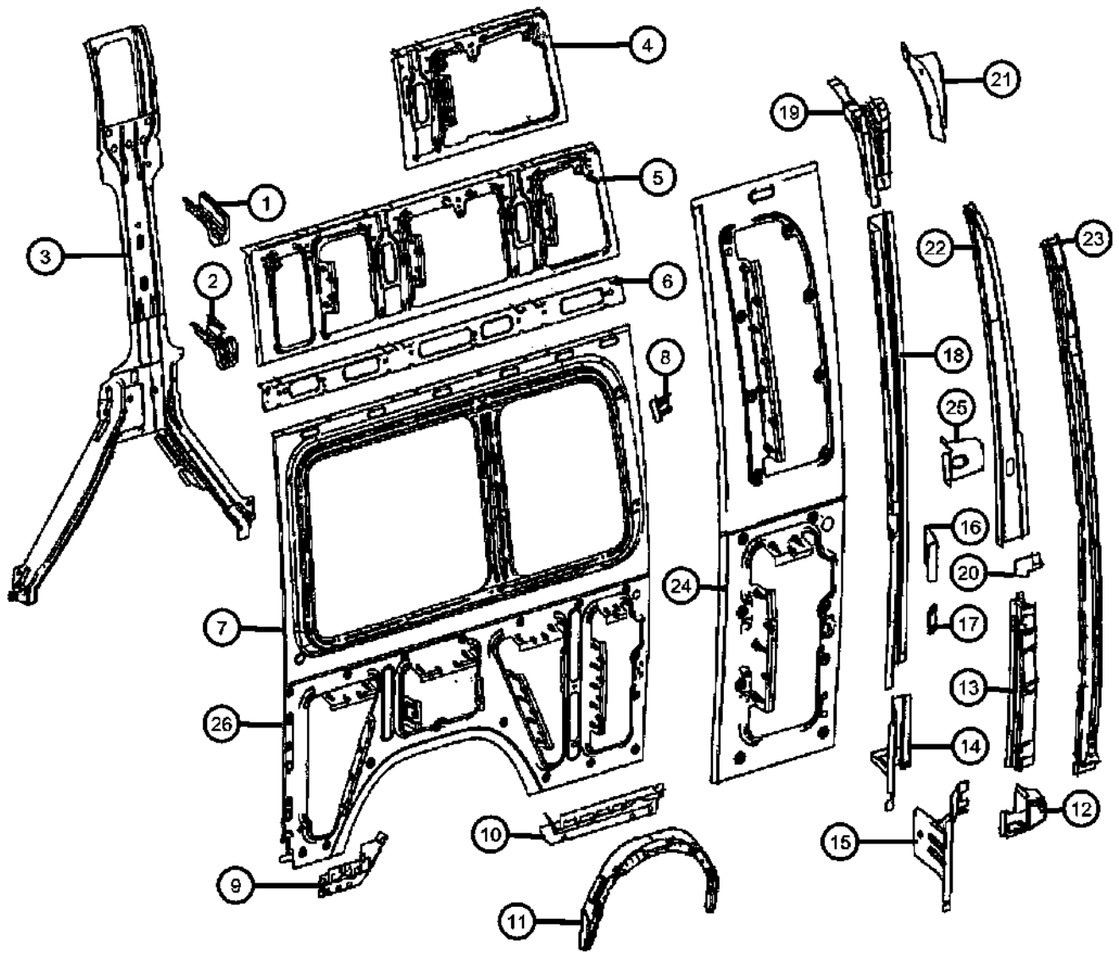

ITEM	PART NUMBER	QTY	LINE	SERIES	BODY	ENGINE	TRANS	TRIM	DESCRIPTION
1									BRACKET
	68008615AA	5	2, 3, 6, 7		13, 15, 17, 53, 55				
		3	2, 3, 6, 7		13, 53				
2	68008654AA	1	2, 3, 6, 7		13, 15, 17				BRACKET, C pillar
3	68008742AA	1	2, 3, 6, 7		15, 17, 55				REINFORCEMENT, Side Panel
4	68008651AA	1	2, 3, 6, 7		17				REINFORCEMENT, Roof Panel
5									REINFORCEMENT, Roof Panel
	68008627AA	1	2, 3, 6, 7		17				
	68008641AA	1	2, 3, 6, 7		13, 53				
	68008645AA	1	2, 3, 6, 7		15, 55				
6	68008643AA	1	2, 3, 6, 7		13, 53				REINFORCEMENT, Roof Panel
7	68008709AA	1	3, 6, 7, 2		13, 53				PANEL
8	68008738AA	1	2, 3, 6, 7		13, 15, 17, 53, 55				REINFORCEMENT
9									REINFORCEMENT, Side Panel
	68008727AA	1	2, 3, 6, 7		13, 53				
	68008731AA	1	2, 3, 6, 7		15, 17, 55				
10									REINFORCEMENT, Side Panel
	68008715AA	1	2, 3, 6, 7		13, 53				
	68008717AA	1	2, 3, 6, 7		15, 55				
	68008719AA	1	2, 3, 6, 7		17				
11	68008765AA	1	2, 3, 6, 7						PANEL, Wheelhouse
12	68008538AA	1	2, 3, 6, 7		13, 15, 17, 53, 55				REINFORCEMENT
13	68008549AA	1	2, 3, 6, 7		13, 15, 17, 53, 55				REINFORCEMENT
14	68008759AA	1	2, 3, 6, 7		13, 15, 17, 53, 55				BRACKET
15	68008760AA	1	2, 3, 6, 7		13, 15, 17, 53, 55				REINFORCEMENT
16	68008763AA	1	2, 3, 6, 7		13, 15, 17, 53, 55				REINFORCEMENT
17	68008757AA	1	2, 3, 6, 7		13, 15, 17, 53, 55				BRACKET
18	68008755AA	1	2, 3, 6, 7		13, 15, 17, 53, 55				PANEL, D Pillar

SPRINTER (VB)

SERIES	LINE	BODY	ENGINE	TRANSMISSION
L = LOWLINE	3 = HD DODGE 2WD 6 = Lt. Duty DODGE 4WD 2 = Med. Duty DODGE 2WD 7 = Med. Duty DODGE 4WD	17 = VAN WHEEL BASE 7 55 = WAGON WHEEL BASE 5 15 = VAN WHEEL BASE 5 53 = 119 WB 13 = 119 WB 05 = CAB CHASSIS WHEEL BASE 5 03 = CAB CHASSIS WHEEL BASE 3	EG2 = 3.5L V6 Gas Engine EXM = 3.0L V6 Turbo Diesel Engine	DGZ = 5-Speed Auto W5A380 Transmission

Rear Aperture (Quarter) Panel
Figure 60-653

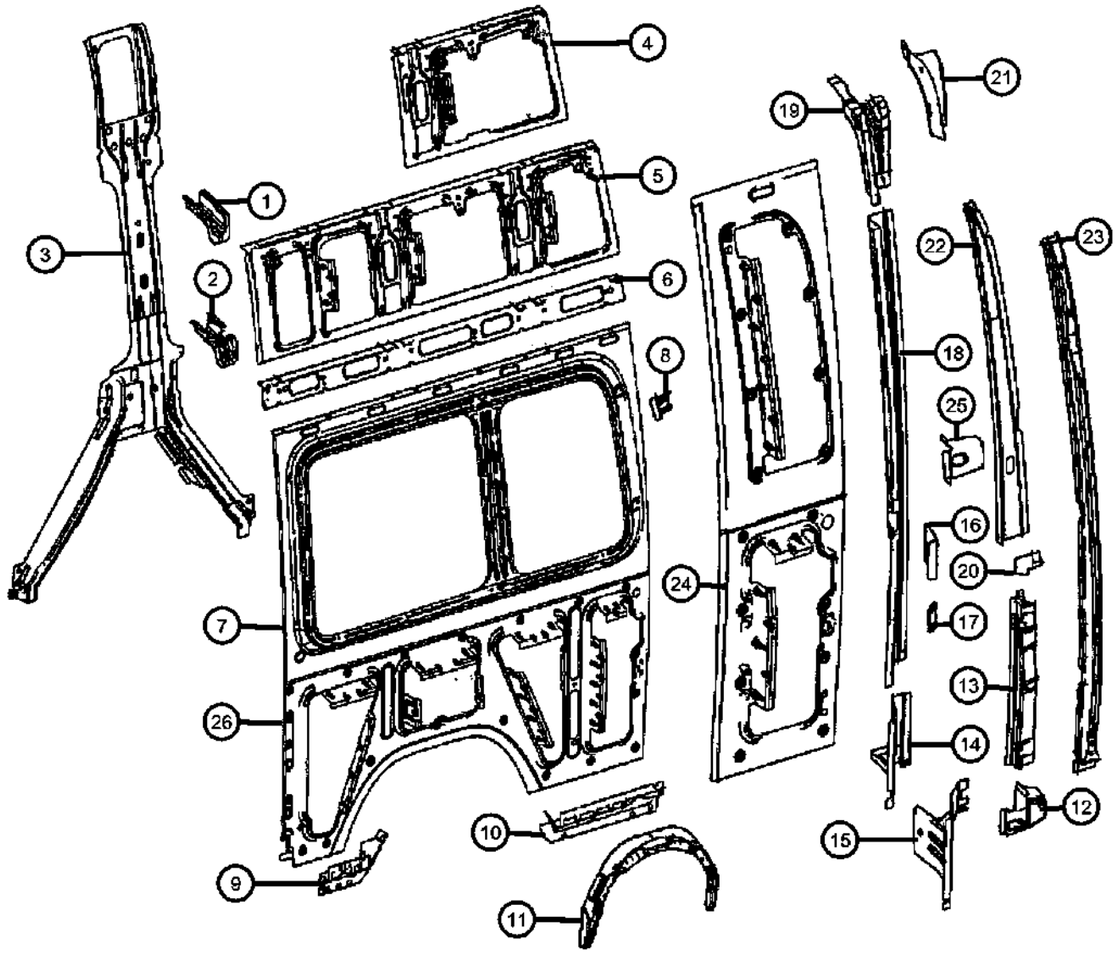

ITEM	PART NUMBER	QTY	LINE	SERIES	BODY	ENGINE	TRANS	TRIM	DESCRIPTION
19									BRACKET, D Pillar
	68005124AA	1	6, 7, 2, 3		13, 15, 17, 53, 55				With High or Mega Roof
	68008752AA	1	2, 3, 6, 7		13, 15, 17, 53, 55				
20	68007551AA	4	3, 7		03, 05				BRACKET
21									REINFORCEMENT
	68008761AA	1	2, 3, 6, 7		13, 15, 17, 53, 55				
	68008762AA	1	2, 3, 6, 7		13, 15, 17, 53, 55				With High or Mega Roof
22									BRACKET
	68008552AA	1	2, 3, 6, 7		13, 15, 17, 53, 55				
	68008553AA	1	2, 3, 6, 7		13, 15, 17, 53, 55				With High or Mega Roof
23	68008747AA	1	2, 3, 6, 7		17				PANEL, D Pillar
24	68008705AA	1	2, 3, 6, 7		17				PANEL, Side Inner
25	68008544AA	1	2, 3, 6, 7		13, 15, 17, 53, 55				REINFORCEMENT, Hinge Pillar
26	68008711AA	1	2, 3, 6, 7		15, 17, 55				PANEL, Side

SPRINTER (VB)

SERIES	LINE	BODY	ENGINE	TRANSMISSION
L = LOWLINE	3 = HD DODGE 2WD 6 = Lt. Duty DODGE 4WD 2 = Med. Duty DODGE 2WD 7 = Med. Duty DODGE 4WD	17 = VAN WHEEL BASE 7 55 = WAGON WHEEL BASE 5 15 = VAN WHEEL BASE 5 53 = 119 WB 13 = 119 WB 05 = CAB CHASSIS WHEEL BASE 5 03 = CAB CHASSIS WHEEL BASE 3	EG2 = 3.5L V6 Gas Engine EXM = 3.0L V6 Turbo Diesel Engine	DGZ = 5-Speed Auto W5A380 Transmission

Rear Aperture (Quarter) Panel
Figure 60-654

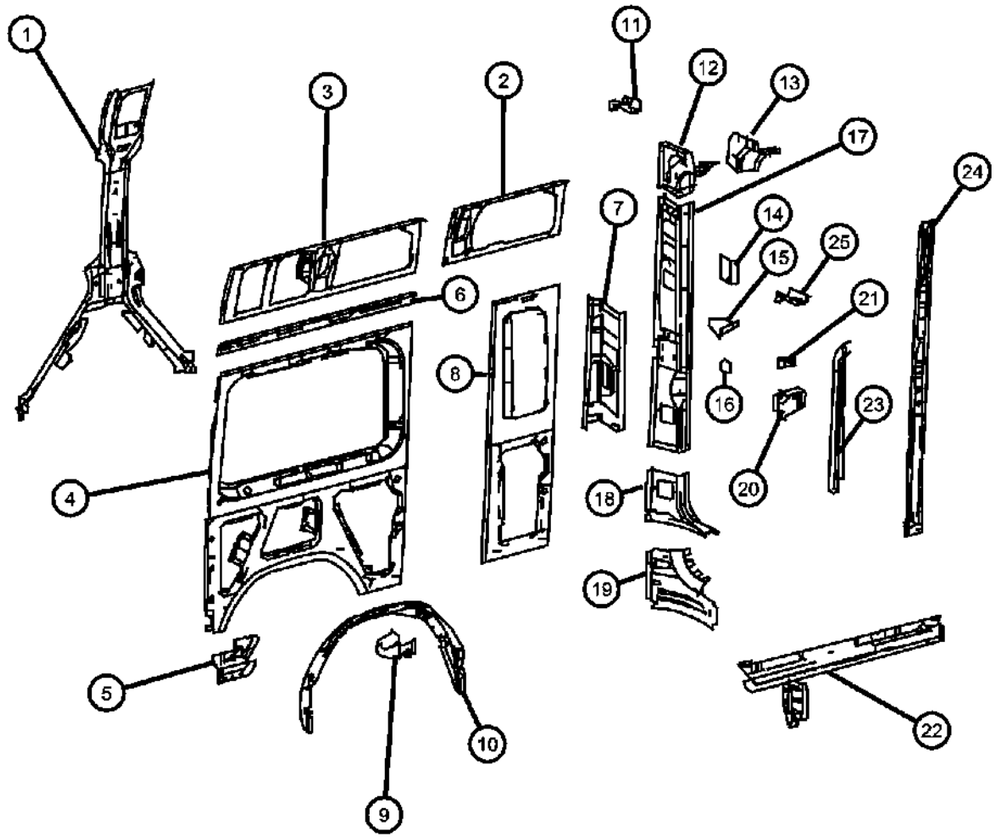

ITEM	PART NUMBER	QTY	LINE	SERIES	BODY	ENGINE	TRANS	TRIM	DESCRIPTION
1	68009330AA	1	2, 3, 6, 7		15, 17, 55				REINFORCEMENT, Side Panel
2	68008650AA	1	2, 3, 6, 7		17				REINFORCEMENT, Roof Panel
3									REINFORCEMENT, Roof Panel
	68008644AA	1	2, 3, 6, 7		15, 55				[5CG]
	68009272AA	1	2, 3, 6, 7		17				
	68008640AA	1	2, 3, 6, 7		13, 53				[5CF]
4	68008710AA	1	2, 3, 6, 7		15, 17, 55				PANEL, Side, Side Panel Inside Rear
5	68008730AA	1	2, 3, 6, 7		15, 17, 55				REINFORCEMENT, Side Panel
6	68008642AA	1	2, 3, 6, 7		13, 53				REINFORCEMENT, Roof Panel, Side Panel Inside, Roof Rail
7	68009232AA	1	2, 3, 6, 7		13, 15, 17, 53, 55				REINFORCEMENT, Side Panel Outside D-Pillar
8	68009319AA	1	2, 3, 6, 7		17				PANEL, Inner
9	68009224AA	1	2, 3, 6, 7		13, 15, 17, 53, 55				REINFORCEMENT, Hinge Bottom Right
10									PANEL, Wheelhouse
	68009347AA	1	2, 3, 6, 7						[ZU7]
	68009351AA	1	3, 7		13, 15, 17				
11									BRACKET
	68008615AA	5	2, 3, 6, 7		13, 15, 17, 53, 55				[T16]
	68008655AA	3	2, 3, 6, 7		13, 15, 17, 53, 55				[D05]
12									PLATE
	68005147AA	1	2, 3, 6, 7		13, 15, 17, 53, 55				[D03,D05,D06] Side Panel Inside D-Pillar
	68009338AA	1	2, 3, 6, 7		13, 15, 17, 53, 55				
13									REINFORCEMENT
	68009345AA	1	2, 3, 6, 7		13, 15, 17, 53, 55				
	68009346AA	1	2, 3, 6, 7		13, 15, 17, 53, 55				High or Super High Roof
14	68008763AA	1	7, 2, 3, 6		13, 15, 17, 53, 55				REINFORCEMENT
15	68009233AA	1	2, 3, 6, 7		13, 15, 17, 53, 55				BRACKET
16	68008757AA	1	2, 3, 6, 7		13, 15, 17, 53, 55				BRACKET

SPRINTER (VB)

SERIES	LINE	BODY	ENGINE	TRANSMISSION
L = LOWLINE	3 = HD DODGE 2WD 6 = Lt. Duty DODGE 4WD 2 = Med. Duty DODGE 2WD 7 = Med. Duty DODGE 4WD	17 = VAN WHEEL BASE 7 55 = WAGON WHEEL BASE 5 15 = VAN WHEEL BASE 5 53 = 119 WB 13 = 119 WB 05 = CAB CHASSIS WHEEL BASE 5 03 = CAB CHASSIS WHEEL BASE 3	EG2 = 3.5L V6 Gas Engine EXM = 3.0L V6 Turbo Diesel Engine	DGZ = 5-Speed Auto W5A380 Transmission

Rear Aperture (Quarter) Panel
Figure 60-654

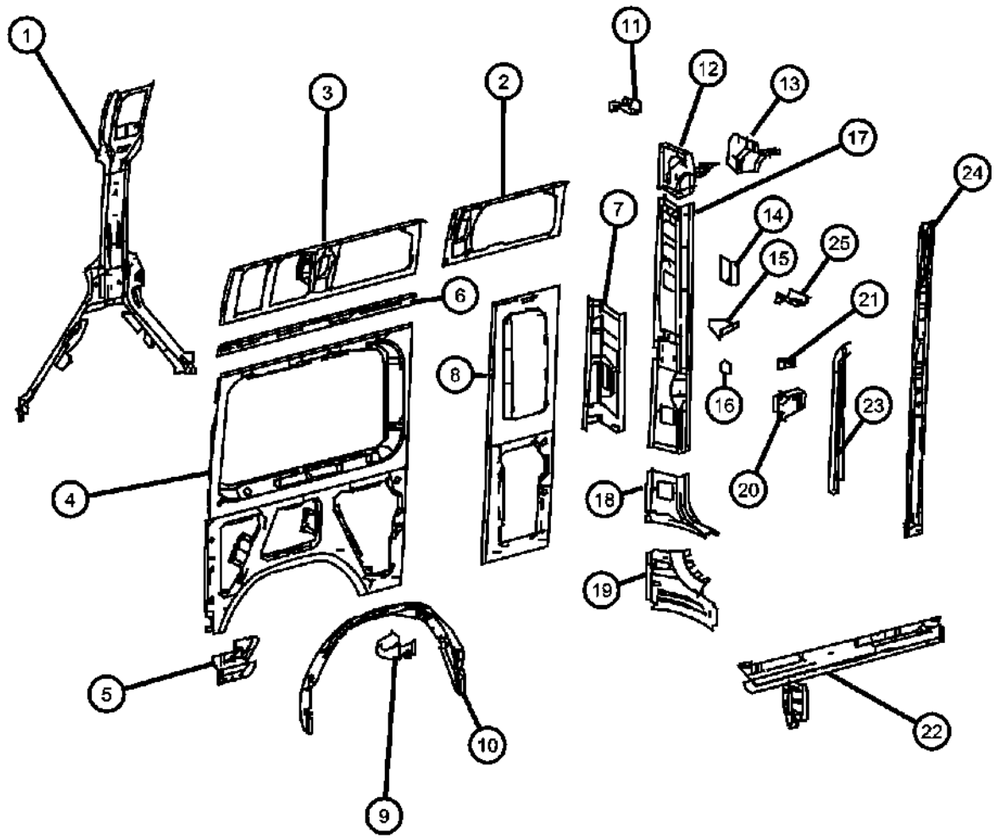

ITEM	PART NUMBER	QTY	LINE	SERIES	BODY	ENGINE	TRANS	TRIM	DESCRIPTION
17	68008754AA	1	2, 3, 6, 7		13, 15, 17, 53, 55				PANEL, D Pillar
18	68009343AA	1	2, 3, 6, 7		13, 15, 17, 53, 55				REINFORCEMENT
19	68009344AA	1	2, 3, 6, 7		13, 15, 17, 53, 55				REINFORCEMENT
20	68009219AA	1	2, 3, 6, 7		13, 15, 17, 53, 55				REINFORCEMENT
21									REINFORCEMENT
	68009326AA	1	2, 3, 6, 7		13, 15, 17, 53, 55				
	68009328AA	1	2, 3, 6, 7		13, 15, 17, 53, 55				Side Panel Outside D-Pillar
22									REINFORCEMENT, Side Panel
	68008716AA	1	2, 3, 6, 7		15, 55				Side Panel Inside -Rear
	68008718AA	1	2, 3, 6, 7		17				
23									PLATE
	68009231AA	1	2, 3, 6, 7		13, 15, 17, 53, 55				High and Super High Roof
	68009230AA	1	2, 3, 6, 7		13, 15, 17, 53, 55				
24	68009335AA	1	2, 3, 6, 7		17				PANEL, D Pillar
25	68009778AA	1	2, 3, 6, 7		13, 15, 17, 53, 55				BRACKET, Roof, Roof Bow

SPRINTER (VB)

SERIES	LINE	BODY	ENGINE	TRANSMISSION
L = LOWLINE	3 = HD DODGE 2WD 6 = Lt. Duty DODGE 4WD 2 = Med. Duty DODGE 2WD 7 = Med. Duty DODGE 4WD	17 = VAN WHEEL BASE 7 55 = WAGON WHEEL BASE 5 15 = VAN WHEEL BASE 5 53 = 119 WB 13 = 119 WB 05 = CAB CHASSIS WHEEL BASE 5 03 = CAB CHASSIS WHEEL BASE 3	EG2 = 3.5L V6 Gas Engine EXM = 3.0L V6 Turbo Diesel Engine	DGZ = 5-Speed Auto W5A380 Transmission

D-Pillar,
Figure 60-685

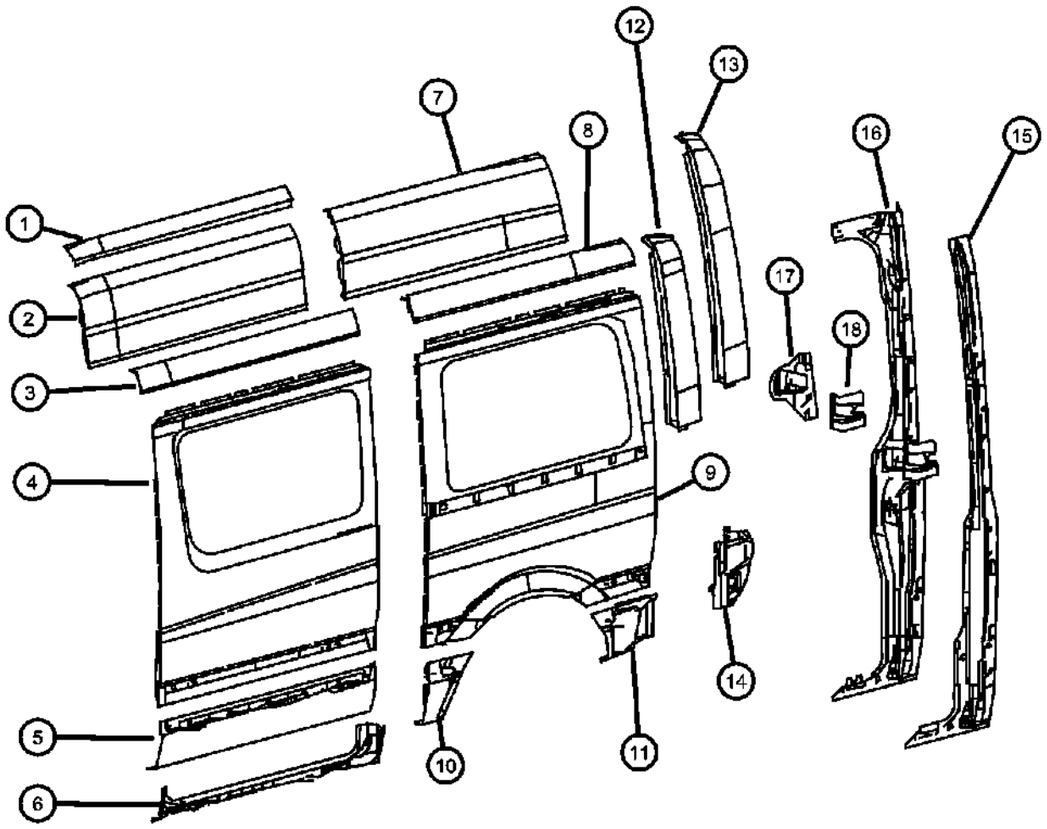

ITEM	PART NUMBER	QTY	LINE	SERIES	BODY	ENGINE	TRANS	TRIM	DESCRIPTION
1	68008503AA	1	2, 3, 6, 7		13, 15, 17, 53, 55				PANEL, Roof
2	68008504AA	1	2, 3, 6, 7		13, 15, 17, 53, 55				PANEL, Roof
3	68008511AA	1	2, 3, 6, 7		13, 53				PANEL, Roof
4	68008462AA	1	2, 3, 6, 7		13, 15, 17, 53, 55				PANEL, Body Side
5	68008493AA	1	7, 2, 3, 6		13, 15, 17, 53, 55				ROCKER
6	68008519AA	1	2, 3, 6, 7		13, 15, 17, 53, 55				PANEL, Sill
7									PANEL, Roof
	68008512AA	1	2, 3, 6, 7		13, 15, 17, 53, 55				
	68008516AA	1	2, 3, 6, 7		13, 53				[5CF]
	68008518AA	1	2, 3, 6, 7		15, 55				[5CG]
8	68008517AA	1	2, 3, 6, 7		13, 53				PANEL, Roof
9	68008517AA	1							PANEL, Body Side Rear, (NOT SERVICED)
10									PANEL, Wheelhouse
	68008466AA	1	2, 3, 6, 7		13, 53				[5CF]
	68008467AA	1	2, 3, 6, 7		15, 17, 55				
11									PANEL, Wheelhouse
	68008489AA	1	2, 3, 6, 7		13, 53				[5CF]
	68008490AA	1	2, 3, 6, 7		15, 55				[5CG]
12	68008531AA	1	2, 3, 6, 7		13, 15, 17, 53, 55				PANEL, D Pillar, Side Panel Outside D_Pillar
13	68008532AA	1	2, 3, 6, 7		13, 15, 17, 53, 55				PANEL, D Pillar
14	68008533AA	1	2, 3, 6, 7		13, 15, 17, 53, 55				EXTENSION, D Pillar Lower
15									PANEL, D Pillar
	68008669AA	1	2, 3, 6, 7		13, 15, 17, 53, 55				
	68008671AA	1	2, 3, 6, 7		13, 15, 17, 53, 55				High or Super High Roof
16									PILLAR, Side Cargo Door
	68008667AA	1	2, 3, 6, 7		13, 15, 17, 53, 55				High Roof and Super High Roof

SPRINTER (VB)

SERIES	LINE	BODY	ENGINE	TRANSMISSION
L = LOWLINE	3 = HD DODGE 2WD 6 = Lt. Duty DODGE 4WD 2 = Med. Duty DODGE 2WD 7 = Med. Duty DODGE 4WD	17 = VAN WHEEL BASE 7 55 = WAGON WHEEL BASE 5 15 = VAN WHEEL BASE 5 53 = 119 WB 13 = 119 WB 05 = CAB CHASSIS WHEEL BASE 5 03 = CAB CHASSIS WHEEL BASE 3	EG2 = 3.5L V6 Gas Engine EXM = 3.0L V6 Turbo Diesel Engine	DGZ = 5-Speed Auto W5A380 Transmission

D-Pillar,
Figure 60-685

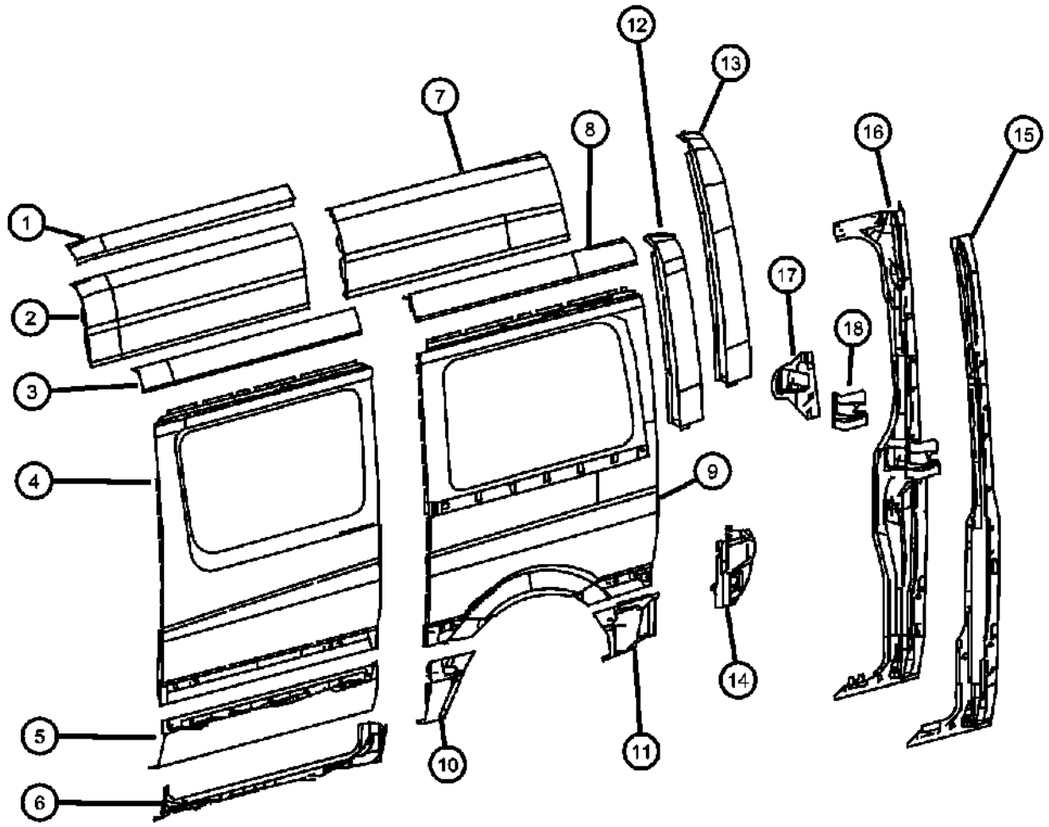

ITEM	PART NUMBER	QTY	LINE	SERIES	BODY	ENGINE	TRANS	TRIM	DESCRIPTION
	68008673AA	1	2, 3, 6, 7		13, 15, 17, 53, 55				Standard
17	68008662AA	1	2, 3, 6, 7		13, 15, 17, 53, 55				PLATE
18	68008665AA	1	2, 3, 6, 7		13, 15, 17, 53, 55				PLATE

SPRINTER (VB)

SERIES	LINE	BODY	ENGINE	TRANSMISSION
L = LOWLINE	3 = HD DODGE 2WD 6 = Lt. Duty DODGE 4WD 2 = Med. Duty DODGE 2WD 7 = Med. Duty DODGE 4WD	17 = VAN WHEEL BASE 7 55 = WAGON WHEEL BASE 5 15 = VAN WHEEL BASE 5 53 = 119 WB 13 = 119 WB 05 = CAB CHASSIS WHEEL BASE 5 03 = CAB CHASSIS WHEEL BASE 3	EG2 = 3.5L V6 Gas Engine EXM = 3.0L V6 Turbo Diesel Engine	DGZ = 5-Speed Auto W5A380 Transmission

D-Pillar
Figure 60-686

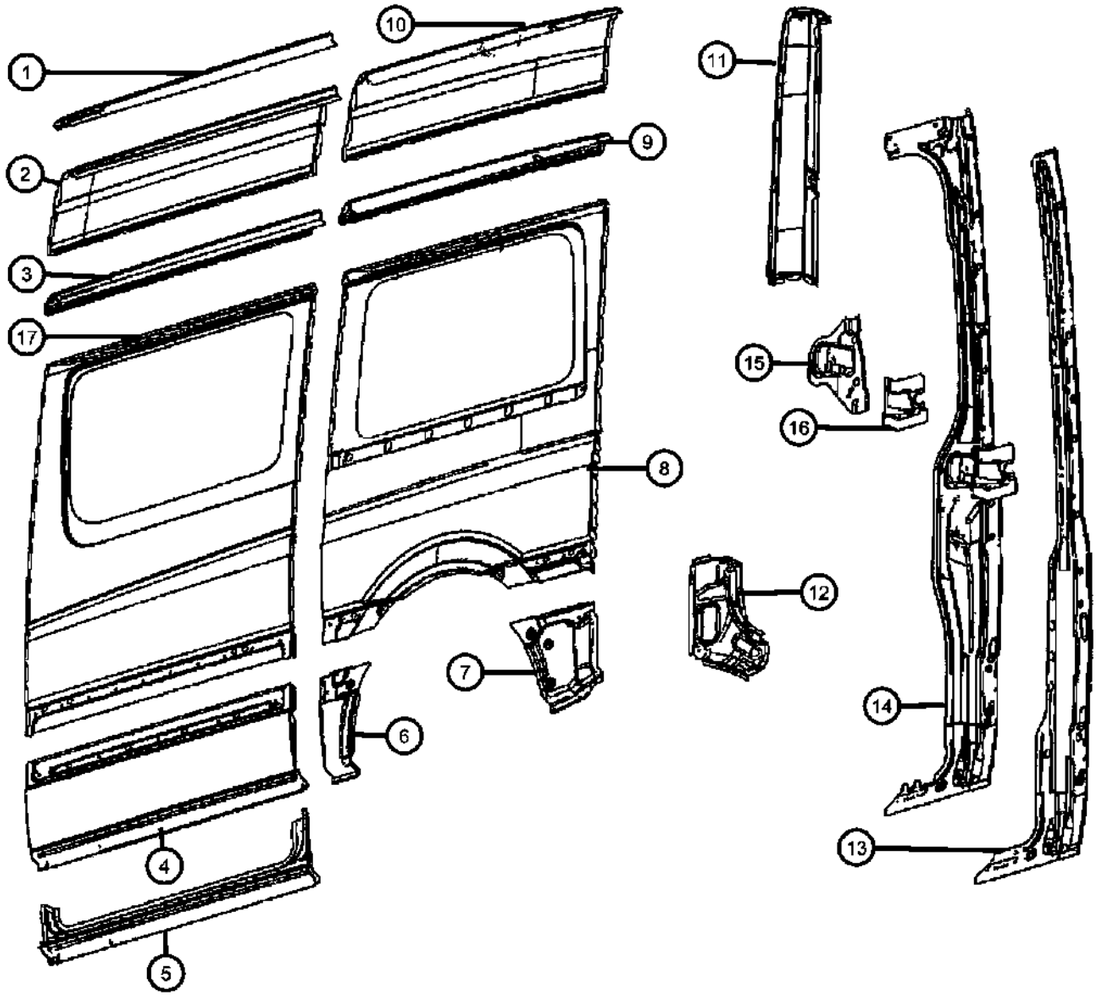

ITEM	PART NUMBER	QTY	LINE	SERIES	BODY	ENGINE	TRANS	TRIM	DESCRIPTION
1	68009182AA	1	3, 6, 7, 2		13, 15, 17, 53, 55				PANEL, Roof
2	68009181AA	1	2, 3, 6, 7		13, 15, 17, 53, 55				PANEL, Roof
3									PANEL, Roof
	68009186AA	1	2, 3, 6, 7		13, 53				
	68009187AA	1	2, 3, 6, 7		13, 15, 17, 53, 55				
4	68009195AA	1	2, 3, 6, 7		13, 15, 17, 53, 55				PANEL, Body Side
5	68009196AA	1	2, 3, 6, 7		13, 15, 17, 53, 55				ROCKER
6	68009157AA	1	2, 3, 6, 7		15, 17, 55				PANEL, Wheelhouse
7									PANEL, Wheelhouse
	68005132AA	1	2, 3, 6, 7		17				
	68008488AA	1	2, 3, 6, 7		13, 53				
	68009177AA	1	2, 3, 6, 7		15, 55				
8	68009177AA	1							PANEL, Rear Body, (NOT SERVICED)
9	68009193AA	1	2, 3, 6, 7		13, 53				PANEL, Roof
10									PANEL, Roof
	68005133AA	1	2, 3, 6, 7		17				
	68009192AA	1	2, 3, 6, 7		13, 53				
	68009194AA	1	2, 3, 6, 7		15, 55				
11	68009194AA	1							PANEL, D Pillar, (NOT SERVICED)
12	68009214AA	1	2, 3, 6, 7		13, 15, 17, 53, 55				REINFORCEMENT
13									PANEL, D Pillar
	68008668AA	1	2, 3, 6, 7		13, 15, 17, 53, 55				
	68008670AA	1	6, 7, 2, 3		13, 15, 17, 53, 55				High and Super High Roof
14									PILLAR, Side Cargo Door
	68008666AA	1	2, 3, 6, 7		13, 15, 17, 53, 55				High and Super High Roof
	68008672AA	1	2, 3, 6, 7		13, 15, 17, 53, 55				
15	68006310AA	1	2, 3, 6, 7						BRACKET

SPRINTER (VB)

SERIES	LINE	BODY	ENGINE	TRANSMISSION
L = LOWLINE	3 = HD DODGE 2WD 6 = Lt. Duty DODGE 4WD 2 = Med. Duty DODGE 2WD 7 = Med. Duty DODGE 4WD	17 = VAN WHEEL BASE 7 55 = WAGON WHEEL BASE 5 15 = VAN WHEEL BASE 5 53 = 119 WB 13 = 119 WB 05 = CAB CHASSIS WHEEL BASE 5 03 = CAB CHASSIS WHEEL BASE 3	EG2 = 3.5L V6 Gas Engine EXM = 3.0L V6 Turbo Diesel Engine	DGZ = 5-Speed Auto W5A380 Transmission

D-Pillar
Figure 60-686

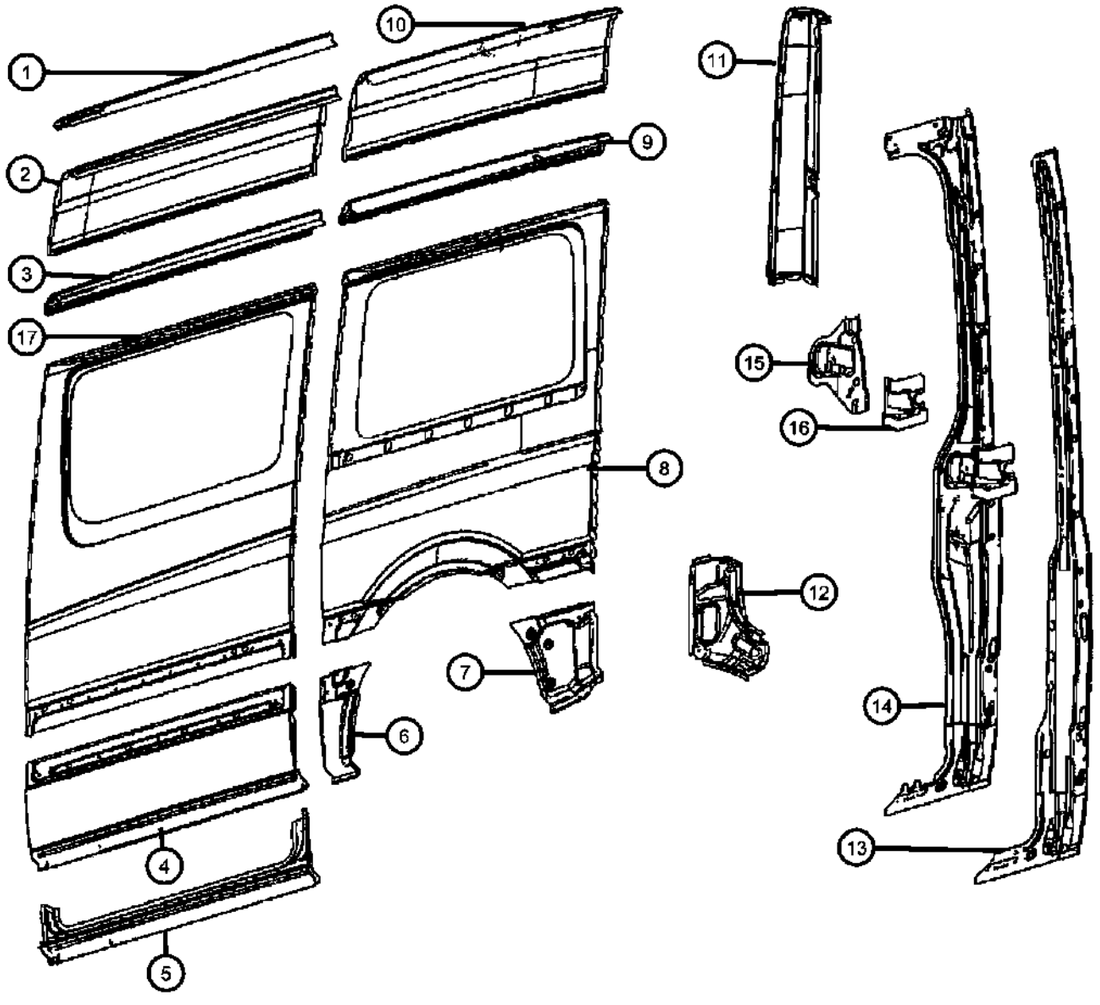

ITEM	PART NUMBER	QTY	LINE	SERIES	BODY	ENGINE	TRANS	TRIM	DESCRIPTION
16	68008664AA	1	2, 3, 6, 7		13, 15, 17, 53, 55				PLATE
17	68009152AA	1	2, 3, 6, 7		13, 15, 17, 53, 55				PANEL, Body Side

SPRINTER (VB)

SERIES	LINE	BODY	ENGINE	TRANSMISSION
L = LOWLINE	3 = HD DODGE 2WD 6 = Lt. Duty DODGE 4WD 2 = Med. Duty DODGE 2WD 7 = Med. Duty DODGE 4WD	17 = VAN WHEEL BASE 7 55 = WAGON WHEEL BASE 5 15 = VAN WHEEL BASE 5 53 = 119 WB 13 = 119 WB 05 = CAB CHASSIS WHEEL BASE 5 03 = CAB CHASSIS WHEEL BASE 3	EG2 = 3.5L V6 Gas Engine EXM = 3.0L V6 Turbo Diesel Engine	DGZ = 5-Speed Auto W5A380 Transmission

D-Pillar
Figure 60-687

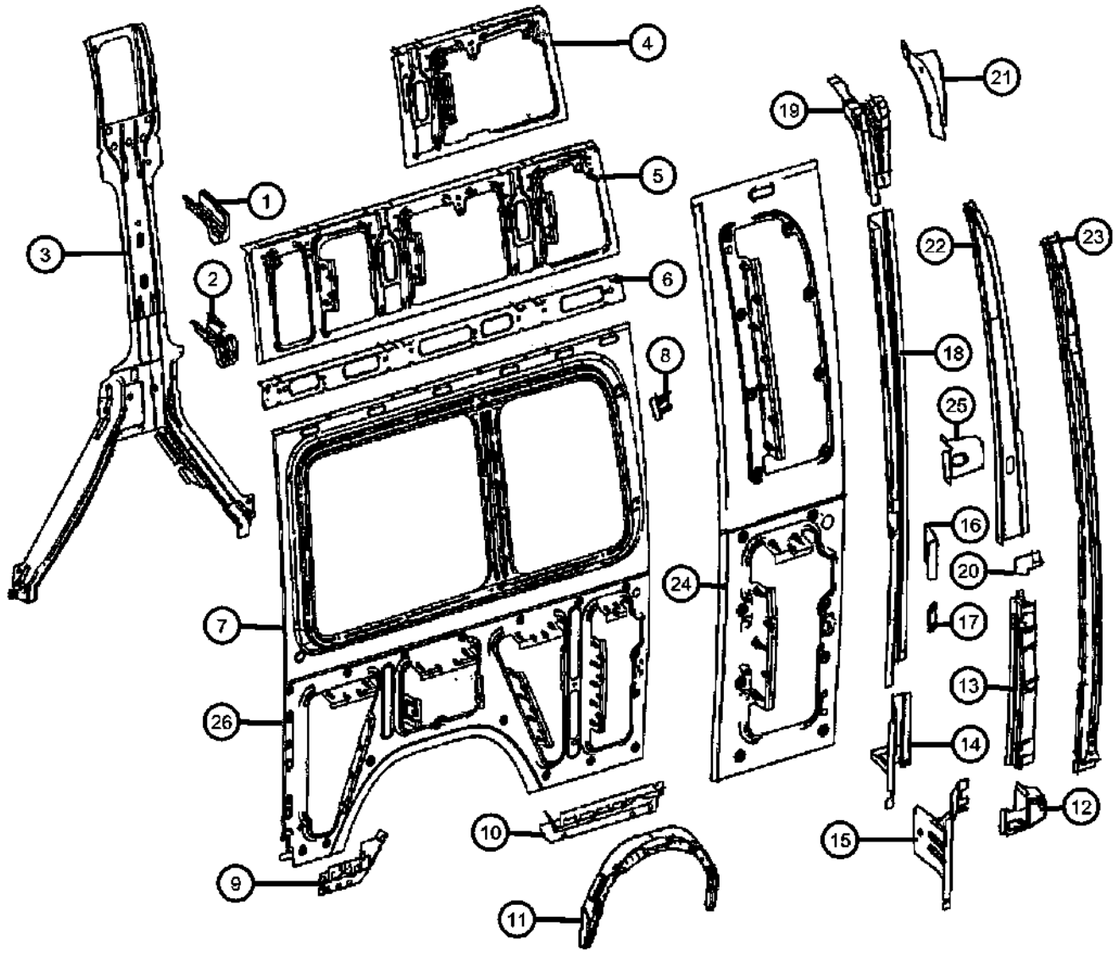

ITEM	PART NUMBER	QTY	LINE	SERIES	BODY	ENGINE	TRANS	TRIM	DESCRIPTION
1									BRACKET
	68008615AA	5	2, 3, 6, 7		13, 15, 17, 53, 55				
		3	2, 3, 6, 7		13, 53				
2	68008654AA	1	2, 3, 6, 7		13, 15, 17				BRACKET, C pillar
3	68008742AA	1	2, 3, 6, 7		15, 17, 55				REINFORCEMENT, Side Panel
4	68008651AA	1	2, 3, 6, 7		17				REINFORCEMENT, Roof Panel
5									REINFORCEMENT, Roof Panel
	68008627AA	1	2, 3, 6, 7		17				
	68008641AA	1	2, 3, 6, 7		13, 53				
	68008645AA	1	2, 3, 6, 7		15, 55				
6	68008643AA	1	2, 3, 6, 7		13, 53				REINFORCEMENT, Roof Panel
7	68008709AA	1	2, 3, 6, 7		13, 53				PANEL
8	68008738AA	1	3, 6, 7, 2		13, 15, 17, 53, 55				REINFORCEMENT
9									REINFORCEMENT, Side Panel
	68008727AA	1	2, 3, 6, 7		13, 53				
	68008731AA	1	2, 3, 6, 7		15, 17, 55				
10									REINFORCEMENT, Side Panel
	68008715AA	1	2, 3, 6, 7		13, 53				
	68008717AA	1	2, 3, 6, 7		15, 55				
	68008719AA	1	2, 3, 6, 7		17				
11	68008765AA	1	2, 3, 6, 7						PANEL, Wheelhouse
12	68008538AA	1	2, 3, 6, 7		13, 15, 17, 53, 55				REINFORCEMENT
13	68008549AA	1	2, 3, 6, 7		13, 15, 17, 53, 55				REINFORCEMENT
14	68008759AA	1	2, 3, 6, 7		13, 15, 17, 53, 55				BRACKET
15	68008760AA	1	2, 3, 6, 7		13, 15, 17, 53, 55				REINFORCEMENT
16	68008763AA	1	2, 3, 6, 7		13, 15, 17, 53, 55				REINFORCEMENT
17	68008757AA	1	2, 3, 6, 7		13, 15, 17, 53, 55				BRACKET
18	68008755AA	1	2, 3, 6, 7		13, 15, 17, 53, 55				PANEL, D Pillar

SPRINTER (VB)

SERIES	LINE	BODY	ENGINE	TRANSMISSION
L = LOWLINE	3 = HD DODGE 2WD 6 = Lt. Duty DODGE 4WD 2 = Med. Duty DODGE 2WD 7 = Med. Duty DODGE 4WD	17 = VAN WHEEL BASE 7 55 = WAGON WHEEL BASE 5 15 = VAN WHEEL BASE 5 53 = 119 WB 13 = 119 WB 05 = CAB CHASSIS WHEEL BASE 5 03 = CAB CHASSIS WHEEL BASE 3	EG2 = 3.5L V6 Gas Engine EXM = 3.0L V6 Turbo Diesel Engine	DGZ = 5-Speed Auto W5A380 Transmission

D-Pillar
Figure 60-687

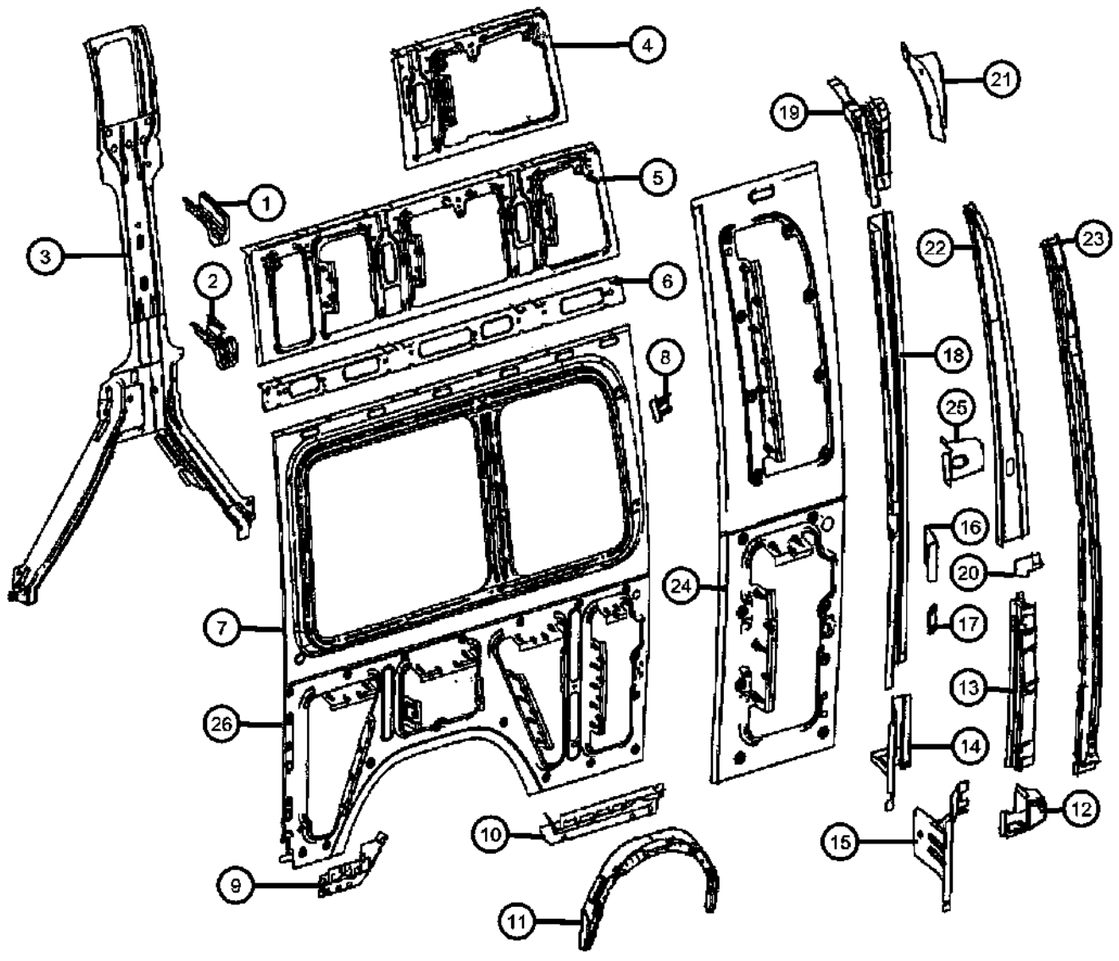

ITEM	PART NUMBER	QTY	LINE	SERIES	BODY	ENGINE	TRANS	TRIM	DESCRIPTION
19									BRACKET, D Pillar
	68005124AA	1	2, 3, 6, 7		13, 15, 17, 53, 55				With High or Mega Roof
	68008752AA	1	6, 7, 2, 3		13, 15, 17, 53, 55				
20	68007551AA	4	3, 7		03, 05				BRACKET
21									REINFORCEMENT
	68008761AA	1	2, 3, 6, 7		13, 15, 17, 53, 55				
	68008762AA	1	2, 3, 6, 7		13, 15, 17, 53, 55				With High or Mega Roof
22									BRACKET
	68008553AA	1	2, 3, 6, 7		13, 15, 17, 53, 55				With High or Mega Roof
	68008552AA	1	2, 3, 6, 7		13, 15, 17, 53, 55				
23	68008747AA	1	2, 3, 6, 7		17				PANEL, D Pillar
24	68008705AA	1	2, 3, 6, 7		17				PANEL, Side Inner
25	68008544AA	1	2, 3, 6, 7		13, 15, 17, 53, 55				REINFORCEMENT, Hinge Pillar
26	68008711AA	1	2, 3, 6, 7		15, 17, 55				PANEL, Side

SPRINTER (VB)

SERIES	LINE	BODY	ENGINE	TRANSMISSION
L = LOWLINE	3 = HD DODGE 2WD 6 = Lt. Duty DODGE 4WD 2 = Med. Duty DODGE 2WD 7 = Med. Duty DODGE 4WD	17 = VAN WHEEL BASE 7 55 = WAGON WHEEL BASE 5 15 = VAN WHEEL BASE 5 53 = 119 WB 13 = 119 WB 05 = CAB CHASSIS WHEEL BASE 5 03 = CAB CHASSIS WHEEL BASE 3	EG2 = 3.5L V6 Gas Engine EXM = 3.0L V6 Turbo Diesel Engine	DGZ = 5-Speed Auto W5A380 Transmission

D-Pillar Side Panel Inner, Right
Figure 60-688

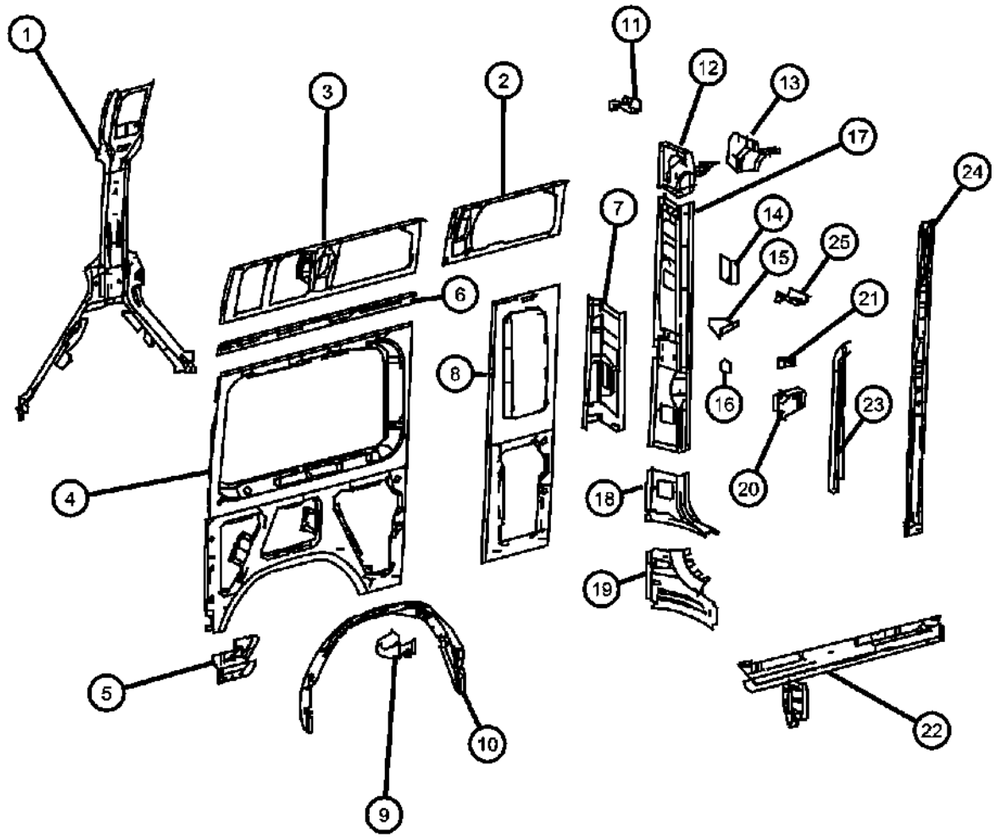

ITEM	PART NUMBER	QTY	LINE	SERIES	BODY	ENGINE	TRANS	TRIM	DESCRIPTION
1	68009330AA	1	2, 3, 6, 7		15, 17, 55				REINFORCEMENT, Side Panel
2	68008650AA	1	2, 3, 6, 7		17				REINFORCEMENT, Roof Panel
3									REINFORCEMENT, Roof Panel
	68008640AA	1	2, 3, 6, 7		13, 53				[5CF]
	68008644AA	1	2, 3, 6, 7		15, 55				[5CG]
	68009272AA	1	2, 3, 6, 7		17				
4	68008710AA	1	2, 3, 6, 7		15, 17, 55				PANEL, Side, Side Panel Inside Rear
5	68008730AA	1	2, 3, 6, 7		15, 17, 55				REINFORCEMENT, Side Panel
6	68008642AA	1	2, 3, 6, 7		13, 53				REINFORCEMENT, Roof Panel, Side Panel Inside, Roof Rail
7	68009232AA	1	2, 3, 6, 7		13, 15, 17, 53, 55				REINFORCEMENT, Side Panel Outside D-Pillar
8	68009319AA	1	2, 3, 6, 7		17				PANEL, Inner
9	68009224AA	1	2, 3, 6, 7		13, 15, 17, 53, 55				REINFORCEMENT, Hinge Bottom Right
10									PANEL, Wheelhouse
	68009347AA	1	2, 3, 6, 7						[ZU7]
	68009351AA	1	3, 7		13, 15, 17				
11									BRACKET
	68008615AA	5	2, 3, 6, 7		13, 15, 17, 53, 55				[T16]
	68008655AA	3	2, 3, 6, 7		13, 15, 17, 53, 55				[D05]
12									PLATE
	68005147AA	1	2, 3, 6, 7		13, 15, 17, 53, 55				[D03,D05,D06] Side Panel Inside D-Pillar
	68009338AA	1	2, 3, 6, 7		13, 15, 17, 53, 55				
13									REINFORCEMENT
	68009345AA	1	2, 3, 6, 7		13, 15, 17, 53, 55				
	68009346AA	1	2, 3, 6, 7		13, 15, 17, 53, 55				High or Super High Roof
14	68008763AA	1	2, 3, 6, 7		13, 15, 17, 53, 55				REINFORCEMENT
15	68009233AA	1	7, 2, 3, 6		13, 15, 17, 53, 55				BRACKET
16	68008757AA	1	2, 3, 6, 7		13, 15, 17, 53, 55				BRACKET

SPRINTER (VB)

SERIES	LINE	BODY	ENGINE	TRANSMISSION
L = LOWLINE	3 = HD DODGE 2WD 6 = Lt. Duty DODGE 4WD 2 = Med. Duty DODGE 2WD 7 = Med. Duty DODGE 4WD	17 = VAN WHEEL BASE 7 55 = WAGON WHEEL BASE 5 15 = VAN WHEEL BASE 5 53 = 119 WB 13 = 119 WB 05 = CAB CHASSIS WHEEL BASE 5 03 = CAB CHASSIS WHEEL BASE 3	EG2 = 3.5L V6 Gas Engine EXM = 3.0L V6 Turbo Diesel Engine	DGZ = 5-Speed Auto W5A380 Transmission

D-Pillar Side Panel Inner, Right
Figure 60-688

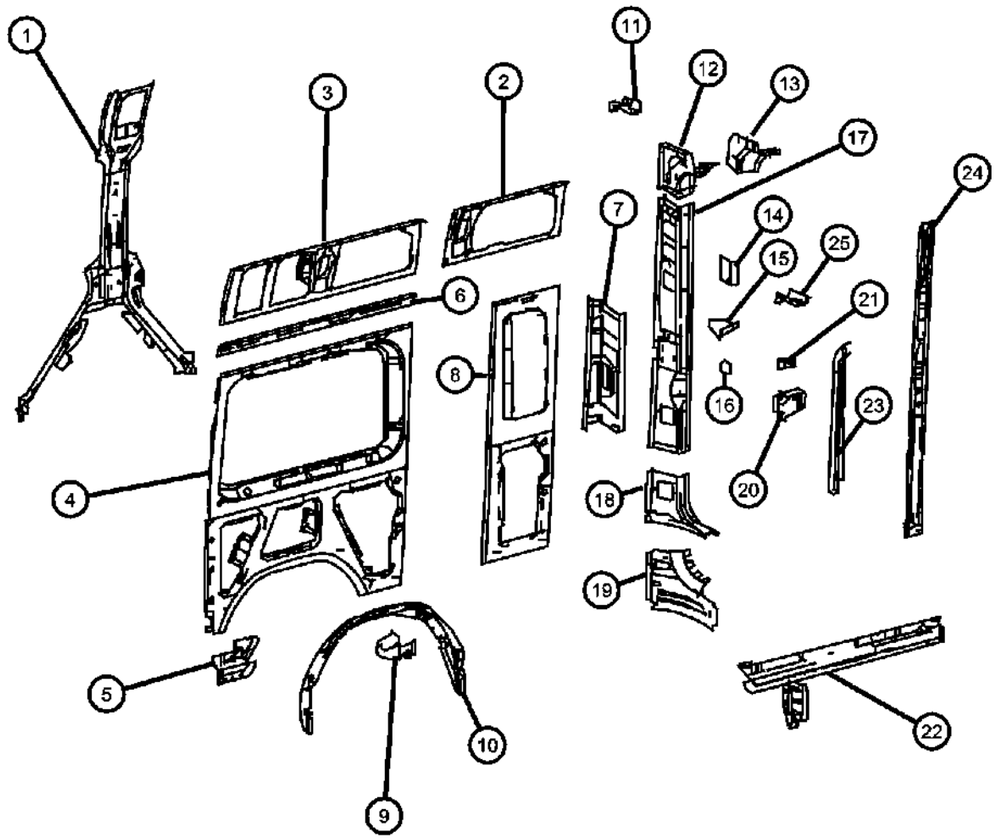

ITEM	PART NUMBER	QTY	LINE	SERIES	BODY	ENGINE	TRANS	TRIM	DESCRIPTION
17	68008754AA	1	2, 3, 6, 7		13, 15, 17, 53, 55				PANEL, D Pillar
18	68009343AA	1	2, 3, 6, 7		13, 15, 17, 53, 55				REINFORCEMENT
19	68009344AA	1	2, 3, 6, 7		13, 15, 17, 53, 55				REINFORCEMENT
20	68009219AA	1	2, 3, 6, 7		13, 15, 17, 53, 55				REINFORCEMENT
21									REINFORCEMENT
	68009326AA	1	2, 3, 6, 7		13, 15, 17, 53, 55				
	68009328AA	1	2, 3, 6, 7		13, 15, 17, 53, 55				Side Panel Outside D-Pillar
22									REINFORCEMENT, Side Panel
	68008716AA	1	2, 3, 6, 7		15, 55				Side Panel Inside -Rear
	68008718AA	1	2, 3, 6, 7		17				
23									PLATE
	68009230AA	1	2, 3, 6, 7		13, 15, 17, 53, 55				
	68009231AA	1	2, 3, 6, 7		13, 15, 17, 53, 55				High and Super High Roof
24	68009335AA	1	2, 3, 6, 7		17				PANEL, D Pillar
25	68009778AA	1	2, 3, 6, 7		13, 15, 17, 53, 55				BRACKET, Roof, Roof Bow

SPRINTER (VB)

SERIES	LINE	BODY	ENGINE	TRANSMISSION
L = LOWLINE	3 = HD DODGE 2WD 6 = Lt. Duty DODGE 4WD 2 = Med. Duty DODGE 2WD 7 = Med. Duty DODGE 4WD	17 = VAN WHEEL BASE 7 55 = WAGON WHEEL BASE 5 15 = VAN WHEEL BASE 5 53 = 119 WB 13 = 119 WB 05 = CAB CHASSIS WHEEL BASE 5 03 = CAB CHASSIS WHEEL BASE 3	EG2 = 3.5L V6 Gas Engine EXM = 3.0L V6 Turbo Diesel Engine	DGZ = 5-Speed Auto W5A380 Transmission

Fuel Filler Housing And Door
Figure 60-775

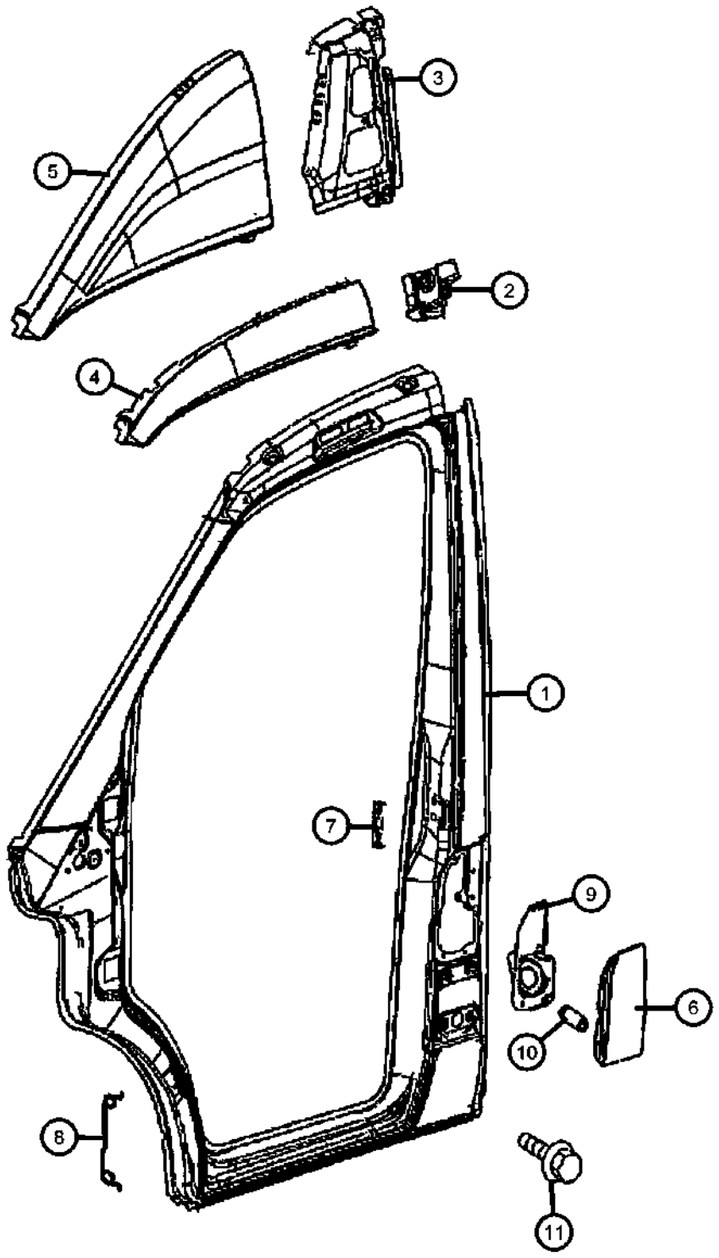

ITEM	PART NUMBER	QTY	LINE	SERIES	BODY	ENGINE	TRANS	TRIM	DESCRIPTION
1									APERTURE, Body Side Door
	68008451AA	1	2, 3, 6, 7		13, 15, 17, 53, 55				Without [MWJ or MX1 or MX2], Left
	68008452AA	1	2, 3, 6, 7		13, 15, 17, 53, 55				With [MWJ or MX1 or MX2], Left
2									BRACKET, B-Pillar
	68005109AA	1	2, 3, 6, 7		13, 15, 17, 53, 55				B-Pillar With [GKE], Top, Left
	68005110AA	1	2, 3, 6, 7		13, 15, 17, 53, 55				B-Pillar Without [GKE], Top, Left
3									PANEL, Body Side Aperture
	68008495AA	1	2, 3, 6, 7		13, 15, 17, 53, 55				B-Pillar With [MWJ or MX1 or MX2] + [GKE], Top, Left
	68008496AA	1	2, 3, 6, 7		13, 15, 17, 53, 55				B-Pillar With [MWJ or MX1 or MX2], Top, Left
4	68008512AA	1	2, 3, 6, 7		13, 15, 17, 53, 55				PANEL, Roof, Roof Left Front Rail Without [MWJ or MX1 or MX2]
5	68008513AA	1	3, 6, 7, 2		13, 15, 17, 53, 55				PANEL, Roof, Roof Left Front Rail With [MWJ or MX1 or MX2]
6	68008440AA	1	2, 3, 6, 7						DOOR, Fuel Fill
7	68008443AA	1	2, 3, 6, 7						BRACKET, Fuel Fill Door
8									SPRING, Fuel Filler Door
	05104408AA	1	3, 7		03, 05				
		1	2, 3, 6, 7		13, 15, 17, 53, 55				
9		1							FILLER, Fuel Filler Tube Mounting, (NOT SERVICED)
10	68008447AA	2	2, 3, 6, 7						BUMPER, Fuel Door
11	06104120AA	6	2, 3, 6, 7						SCREW, Hex Head, M6x12, Fuel Fill Door, Mounting

SPRINTER (VB)

SERIES	LINE	BODY	ENGINE	TRANSMISSION
L = LOWLINE	3 = HD DODGE 2WD 6 = Lt. Duty DODGE 4WD 2 = Med. Duty DODGE 2WD 7 = Med. Duty DODGE 4WD	17 = VAN WHEEL BASE 7 55 = WAGON WHEEL BASE 5 15 = VAN WHEEL BASE 5 53 = 119 WB 13 = 119 WB 05 = CAB CHASSIS WHEEL BASE 5 03 = CAB CHASSIS WHEEL BASE 3	EG2 = 3.5L V6 Gas Engine EXM = 3.0L V6 Turbo Diesel Engine	DGZ = 5-Speed Auto W5A380 Transmission

Roof Panel
Figure 60-905

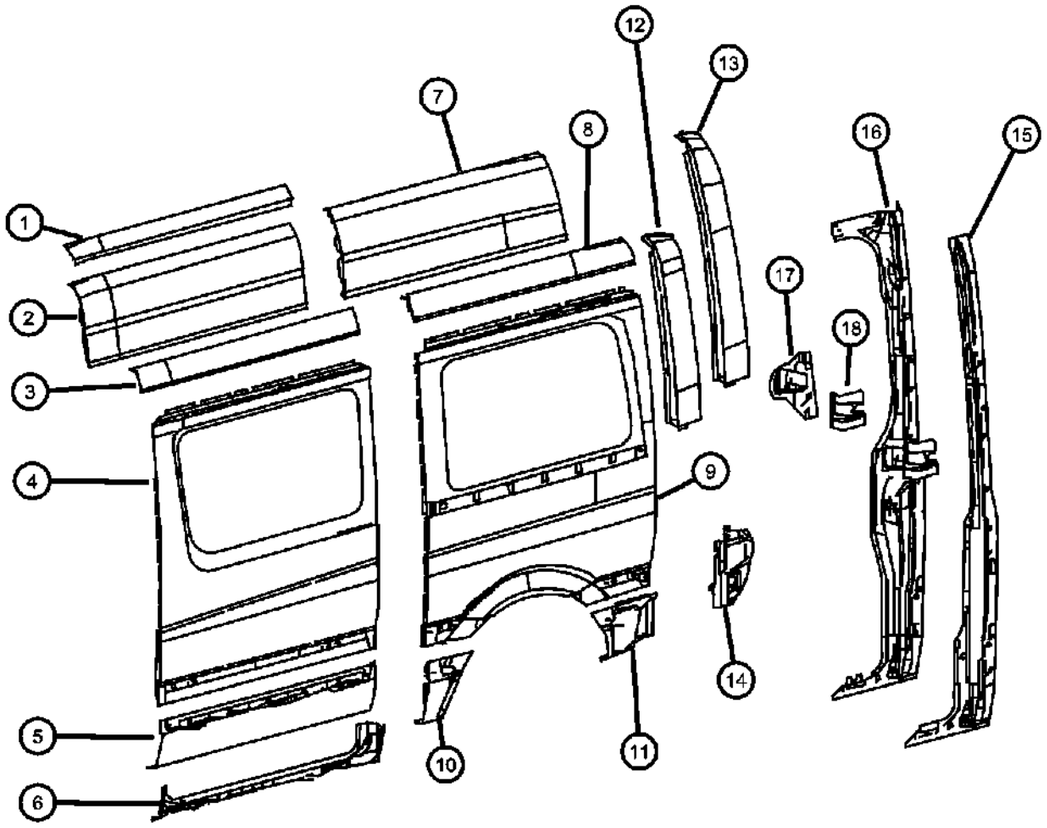

ITEM	PART NUMBER	QTY	LINE	SERIES	BODY	ENGINE	TRANS	TRIM	DESCRIPTION
1	68008503AA	1	2, 3, 6, 7		13, 15, 17, 53, 55				PANEL, Roof
2	68008504AA	1	2, 3, 6, 7		13, 15, 17, 53, 55				PANEL, Roof
3	68008511AA	1	2, 3, 6, 7		13, 53				PANEL, Roof
4	68008462AA	1	2, 3, 6, 7		13, 15, 17, 53, 55				PANEL, Body Side
5	68008493AA	1	2, 3, 6, 7		13, 15, 17, 53, 55				ROCKER
6	68008519AA	1	2, 3, 6, 7		13, 15, 17, 53, 55				PANEL, Sill
7									PANEL, Roof
	68008512AA	1	2, 3, 6, 7		13, 15, 17, 53, 55				
	68008516AA	1	2, 3, 6, 7		13, 53				[5CF]
	68008518AA	1	2, 3, 6, 7		15, 55				[5CG]
8	68008517AA	1	2, 3, 6, 7		13, 53				PANEL, Roof
9	68008517AA	1							PANEL, Body Side Rear, (NOT SERVICED)
10									PANEL, Wheelhouse
	68008466AA	1	2, 3, 6, 7		13, 53				[5CF]
	68008467AA	1	2, 3, 6, 7		15, 17, 55				
11									PANEL, Wheelhouse
	68008489AA	1	2, 3, 6, 7		13, 53				[5CF]
	68008490AA	1	2, 3, 6, 7		15, 55				[5CG]
12	68008531AA	1	2, 3, 6, 7		13, 15, 17, 53, 55				PANEL, D Pillar, Side Panel Outside D_Pillar
13	68008532AA	1	2, 3, 6, 7		13, 15, 17, 53, 55				PANEL, D Pillar
14	68008533AA	1	2, 3, 6, 7		13, 15, 17, 53, 55				EXTENSION, D Pillar Lower
15									PANEL, D Pillar
	68008669AA	1	2, 3, 6, 7		13, 15, 17, 53, 55				
	68008671AA	1	2, 3, 6, 7		13, 15, 17, 53, 55				High or Super High Roof
16									PILLAR, Side Cargo Door
	68008667AA	1	2, 3, 6, 7		13, 15, 17, 53, 55				High Roof and Super High Roof

SPRINTER (VB)

SERIES	LINE	BODY	ENGINE	TRANSMISSION
L = LOWLINE	3 = HD DODGE 2WD 6 = Lt. Duty DODGE 4WD 2 = Med. Duty DODGE 2WD 7 = Med. Duty DODGE 4WD	17 = VAN WHEEL BASE 7 55 = WAGON WHEEL BASE 5 15 = VAN WHEEL BASE 5 53 = 119 WB 13 = 119 WB 05 = CAB CHASSIS WHEEL BASE 5 03 = CAB CHASSIS WHEEL BASE 3	EG2 = 3.5L V6 Gas Engine EXM = 3.0L V6 Turbo Diesel Engine	DGZ = 5-Speed Auto W5A380 Transmission

Roof Panel
Figure 60-905

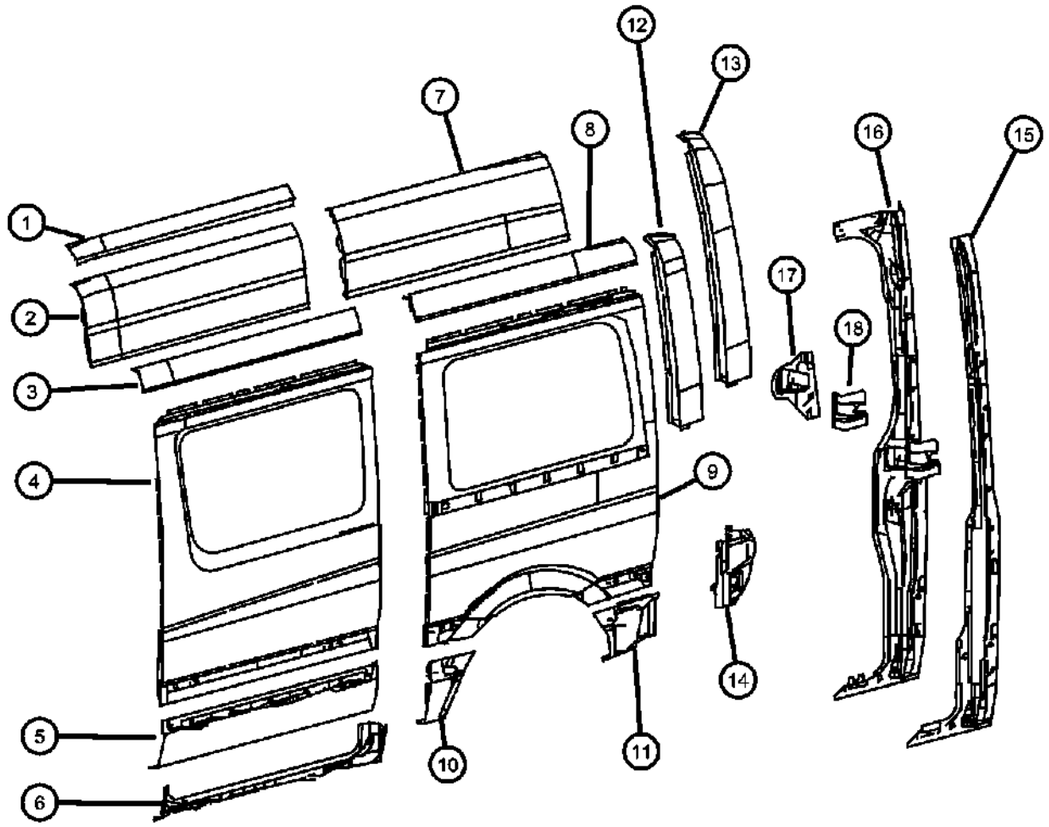

ITEM	PART NUMBER	QTY	LINE	SERIES	BODY	ENGINE	TRANS	TRIM	DESCRIPTION
	68008673AA	1	2, 3, 6, 7		13, 15, 17, 53, 55				Standard
17	68008662AA	1	2, 3, 6, 7		13, 15, 17, 53, 55				PLATE
18	68008665AA	1	2, 3, 6, 7		13, 15, 17, 53, 55				PLATE

SPRINTER (VB)

SERIES	LINE	BODY	ENGINE	TRANSMISSION
L = LOWLINE	3 = HD DODGE 2WD 6 = Lt. Duty DODGE 4WD 2 = Med. Duty DODGE 2WD 7 = Med. Duty DODGE 4WD	17 = VAN WHEEL BASE 7 55 = WAGON WHEEL BASE 5 15 = VAN WHEEL BASE 5 53 = 119 WB 13 = 119 WB 05 = CAB CHASSIS WHEEL BASE 5 03 = CAB CHASSIS WHEEL BASE 3	EG2 = 3.5L V6 Gas Engine EXM = 3.0L V6 Turbo Diesel Engine	DGZ = 5-Speed Auto W5A380 Transmission

Roof Panel
Figure 60-906

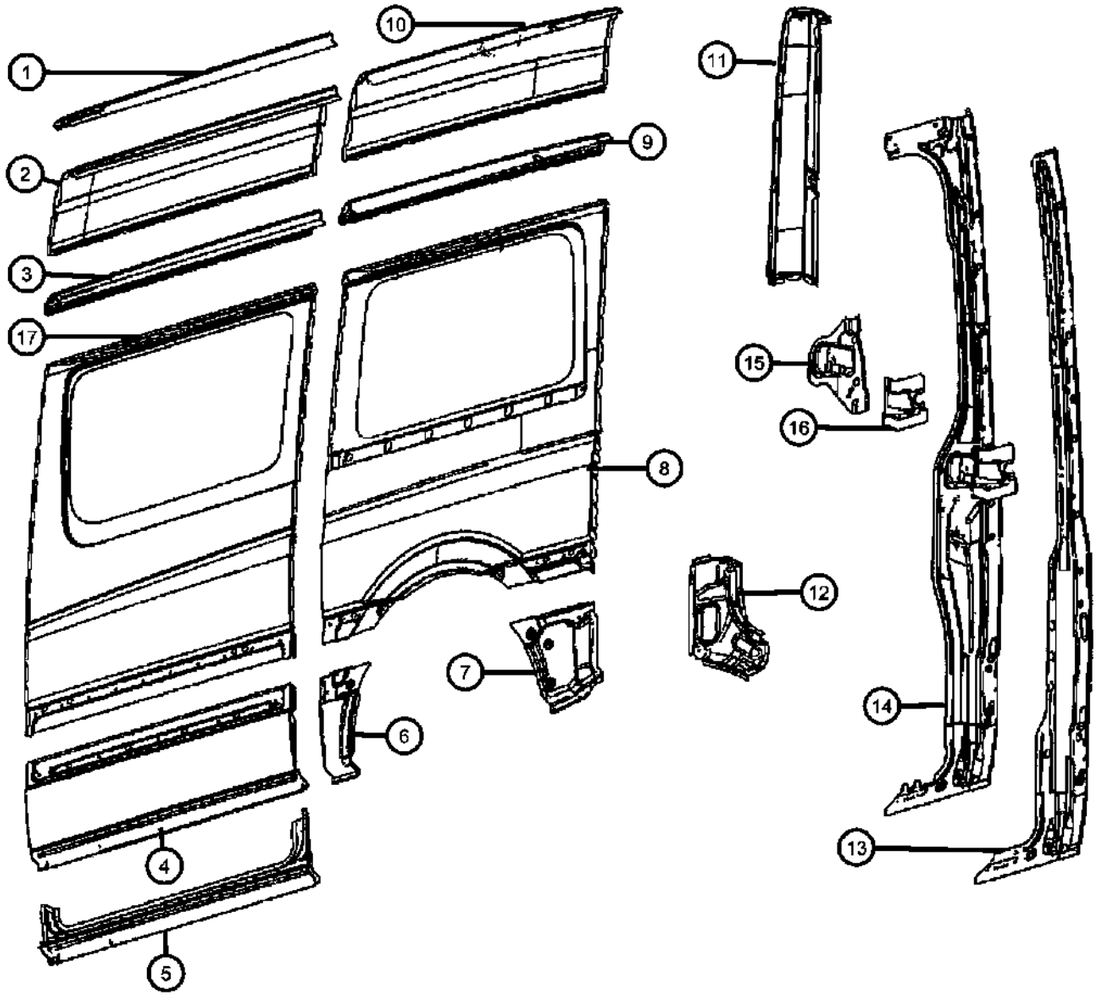

ITEM	PART NUMBER	QTY	LINE	SERIES	BODY	ENGINE	TRANS	TRIM	DESCRIPTION
1	68009182AA	1	2, 3, 6, 7		13, 15, 17, 53, 55				PANEL, Roof
2	68009181AA	1	2, 3, 6, 7		13, 15, 17, 53, 55				PANEL, Roof
3									PANEL, Roof
	68009186AA	1	2, 3, 6, 7		13, 53				
	68009187AA	1	2, 3, 6, 7		13, 15, 17, 53, 55				
4	68009195AA	1	2, 3, 6, 7		13, 15, 17, 53, 55				PANEL, Body Side
5	68009196AA	1	2, 3, 6, 7		13, 15, 17, 53, 55				ROCKER
6	68009157AA	1	2, 3, 6, 7		15, 17, 55				PANEL, Wheelhouse
7									PANEL, Wheelhouse
	68005132AA	1	2, 3, 6, 7		17				
	68008488AA	1	2, 3, 6, 7		13, 53				
	68009177AA	1	2, 3, 6, 7		15, 55				
8	68009177AA	1							PANEL, Rear Body, (NOT SERVICED)
9	68009193AA	1	2, 3, 6, 7		13, 53				PANEL, Roof
10									PANEL, Roof
	68005133AA	1	2, 3, 6, 7		17				
	68009192AA	1	2, 3, 6, 7		13, 53				
	68009194AA	1	2, 3, 6, 7		15, 55				
11	68009194AA	1							PANEL, D Pillar, (NOT SERVICED)
12	68009214AA	1	2, 3, 6, 7		13, 15, 17, 53, 55				REINFORCEMENT
13									PANEL, D Pillar
	68008668AA	1	2, 3, 6, 7		13, 15, 17, 53, 55				
	68008670AA	1	2, 3, 6, 7		13, 15, 17, 53, 55				High and Super High Roof
14									PILLAR, Side Cargo Door
	68008672AA	1	2, 3, 6, 7		13, 15, 17, 53, 55				
	68008666AA	1	2, 3, 6, 7		13, 15, 17, 53, 55				High and Super High Roof
15	68006310AA	1	2, 3, 6, 7						BRACKET

SPRINTER (VB)

SERIES	LINE	BODY	ENGINE	TRANSMISSION
L = LOWLINE	3 = HD DODGE 2WD 6 = Lt. Duty DODGE 4WD 2 = Med. Duty DODGE 2WD 7 = Med. Duty DODGE 4WD	17 = VAN WHEEL BASE 7 55 = WAGON WHEEL BASE 5 15 = VAN WHEEL BASE 5 53 = 119 WB 13 = 119 WB 05 = CAB CHASSIS WHEEL BASE 5 03 = CAB CHASSIS WHEEL BASE 3	EG2 = 3.5L V6 Gas Engine EXM = 3.0L V6 Turbo Diesel Engine	DGZ = 5-Speed Auto W5A380 Transmission

Roof Panel
Figure 60-906

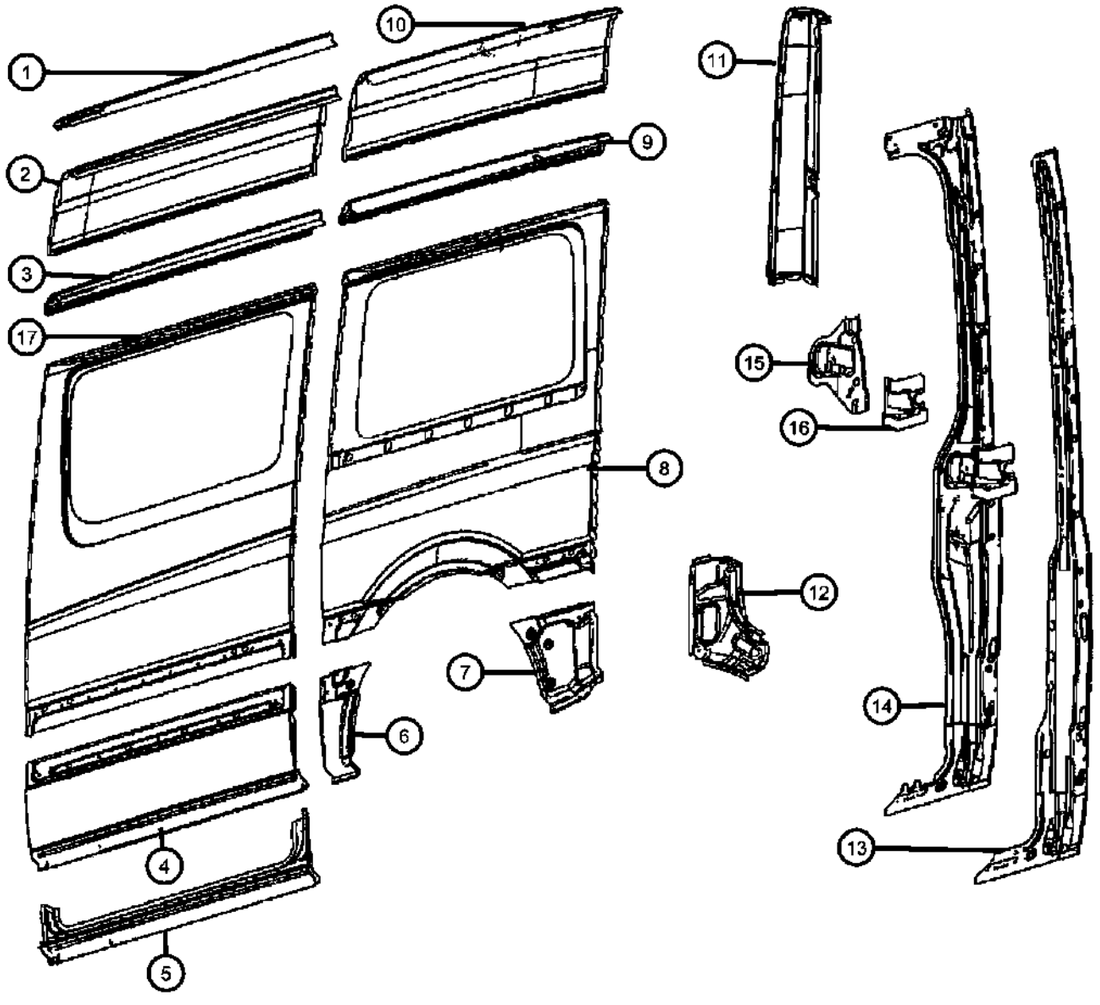

ITEM	PART NUMBER	QTY	LINE	SERIES	BODY	ENGINE	TRANS	TRIM	DESCRIPTION
16	68008664AA	1	2, 3, 6, 7		13, 15, 17, 53, 55				PLATE
17	68009152AA	1	2, 3, 6, 7		13, 15, 17, 53, 55				PANEL, Body Side

SPRINTER (VB)

SERIES	LINE	BODY	ENGINE	TRANSMISSION
L = LOWLINE	3 = HD DODGE 2WD 6 = Lt. Duty DODGE 4WD 2 = Med. Duty DODGE 2WD 7 = Med. Duty DODGE 4WD	17 = VAN WHEEL BASE 7 55 = WAGON WHEEL BASE 5 15 = VAN WHEEL BASE 5 53 = 119 WB 13 = 119 WB 05 = CAB CHASSIS WHEEL BASE 5 03 = CAB CHASSIS WHEEL BASE 3	EG2 = 3.5L V6 Gas Engine EXM = 3.0L V6 Turbo Diesel Engine	DGZ = 5-Speed Auto W5A380 Transmission

Roof Panel
Figure 60-907

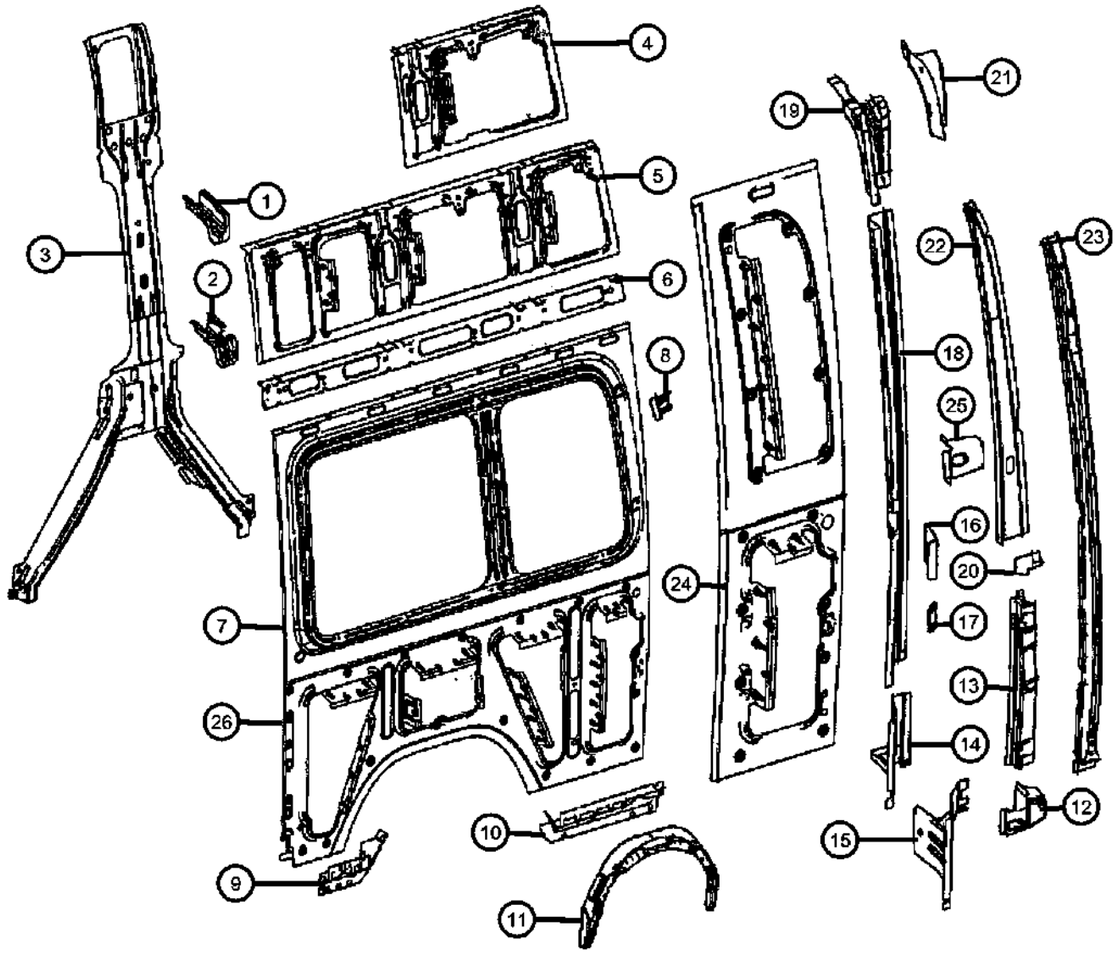

ITEM	PART NUMBER	QTY	LINE	SERIES	BODY	ENGINE	TRANS	TRIM	DESCRIPTION
1									BRACKET
	68008614AA	2	2, 3, 6, 7						
	68008615AA	5	2, 3, 6, 7		13, 15, 17, 53, 55				
		3	2, 3, 6, 7		13, 53				
2	68008654AA	1	2, 3, 6, 7		13, 15, 17				BRACKET, C pillar
3	68008742AA	1	2, 3, 6, 7		15, 17, 55				REINFORCEMENT, Side Panel
4	68008651AA	1	2, 3, 6, 7		17				REINFORCEMENT, Roof Panel
5									REINFORCEMENT, Roof Panel
	68008627AA	1	2, 3, 6, 7		17				
	68008641AA	1	2, 3, 6, 7		13, 53				
	68008645AA	1	2, 3, 6, 7		15, 55				
6	68008643AA	1	2, 3, 6, 7		13, 53				REINFORCEMENT, Roof Panel
7	68008709AA	1	2, 3, 6, 7		13, 53				PANEL
8	68008738AA	1	2, 3, 6, 7		13, 15, 17, 53, 55				REINFORCEMENT
9									REINFORCEMENT, Side Panel
	68008727AA	1	2, 3, 6, 7		13, 53				
	68008731AA	1	2, 3, 6, 7		15, 17, 55				
10									REINFORCEMENT, Side Panel
	68008715AA	1	2, 3, 6, 7		13, 53				
	68008717AA	1	2, 3, 6, 7		15, 55				
	68008719AA	1	2, 3, 6, 7		17				
11	68008765AA	1	2, 3, 6, 7						PANEL, Wheelhouse
12	68008538AA	1	2, 3, 6, 7		13, 15, 17, 53, 55				REINFORCEMENT
13	68008549AA	1	2, 3, 6, 7		13, 15, 17, 53, 55				REINFORCEMENT
14	68008759AA	1	2, 3, 6, 7		13, 15, 17, 53, 55				BRACKET
15	68008760AA	1	2, 3, 6, 7		13, 15, 17, 53, 55				REINFORCEMENT
16	68008763AA	1	2, 3, 6, 7		13, 15, 17, 53, 55				REINFORCEMENT
17	68008757AA	1	2, 3, 6, 7		13, 15, 17, 53, 55				BRACKET

SPRINTER (VB)

SERIES	LINE	BODY	ENGINE	TRANSMISSION
L = LOWLINE	3 = HD DODGE 2WD 6 = Lt. Duty DODGE 4WD 2 = Med. Duty DODGE 2WD 7 = Med. Duty DODGE 4WD	17 = VAN WHEEL BASE 7 55 = WAGON WHEEL BASE 5 15 = VAN WHEEL BASE 5 53 = 119 WB 13 = 119 WB 05 = CAB CHASSIS WHEEL BASE 5 03 = CAB CHASSIS WHEEL BASE 3	EG2 = 3.5L V6 Gas Engine EXM = 3.0L V6 Turbo Diesel Engine	DGZ = 5-Speed Auto W5A380 Transmission

Roof Panel
Figure 60-907

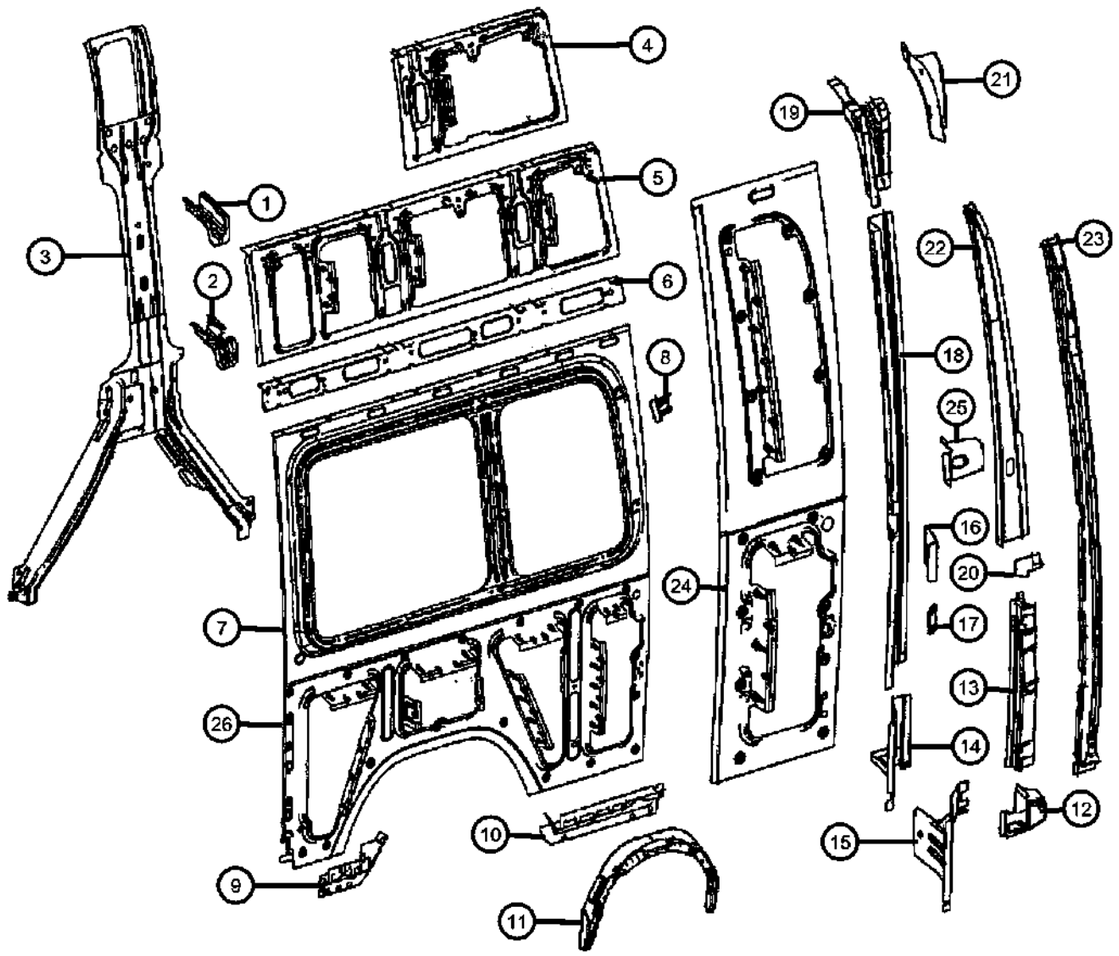

ITEM	PART NUMBER	QTY	LINE	SERIES	BODY	ENGINE	TRANS	TRIM	DESCRIPTION
18	68008755AA	1	2, 3, 6, 7		13, 15, 17, 53, 55				PANEL, D Pillar
19									BRACKET, D Pillar
	68005124AA	1	2, 3, 6, 7		13, 15, 17, 53, 55				With High or Mega Roof
	68008752AA	1	2, 3, 6, 7		13, 15, 17, 53, 55				
20	68007551AA	4	3, 7		03, 05				BRACKET
21									REINFORCEMENT
	68008761AA	1	2, 3, 6, 7		13, 15, 17, 53, 55				
	68008762AA	1	2, 3, 6, 7		13, 15, 17, 53, 55				With High or Mega Roof
22									BRACKET
	68008552AA	1	2, 3, 6, 7		13, 15, 17, 53, 55				
	68008553AA	1	2, 3, 6, 7		13, 15, 17, 53, 55				With High or Mega Roof
23	68008747AA	1	2, 3, 6, 7		17				PANEL, D Pillar
24	68008705AA	1	2, 3, 6, 7		17				PANEL, Side Inner
25	68008544AA	1	2, 3, 6, 7		13, 15, 17, 53, 55				REINFORCEMENT, Hinge Pillar
26	68008711AA	1	2, 3, 6, 7		15, 17, 55				PANEL, Side

SPRINTER (VB)

SERIES	LINE	BODY	ENGINE	TRANSMISSION
L = LOWLINE	3 = HD DODGE 2WD 6 = Lt. Duty DODGE 4WD 2 = Med. Duty DODGE 2WD 7 = Med. Duty DODGE 4WD	17 = VAN WHEEL BASE 7 55 = WAGON WHEEL BASE 5 15 = VAN WHEEL BASE 5 53 = 119 WB 13 = 119 WB 05 = CAB CHASSIS WHEEL BASE 5 03 = CAB CHASSIS WHEEL BASE 3	EG2 = 3.5L V6 Gas Engine EXM = 3.0L V6 Turbo Diesel Engine	DGZ = 5-Speed Auto W5A380 Transmission

Roof Panel
Figure 60-908

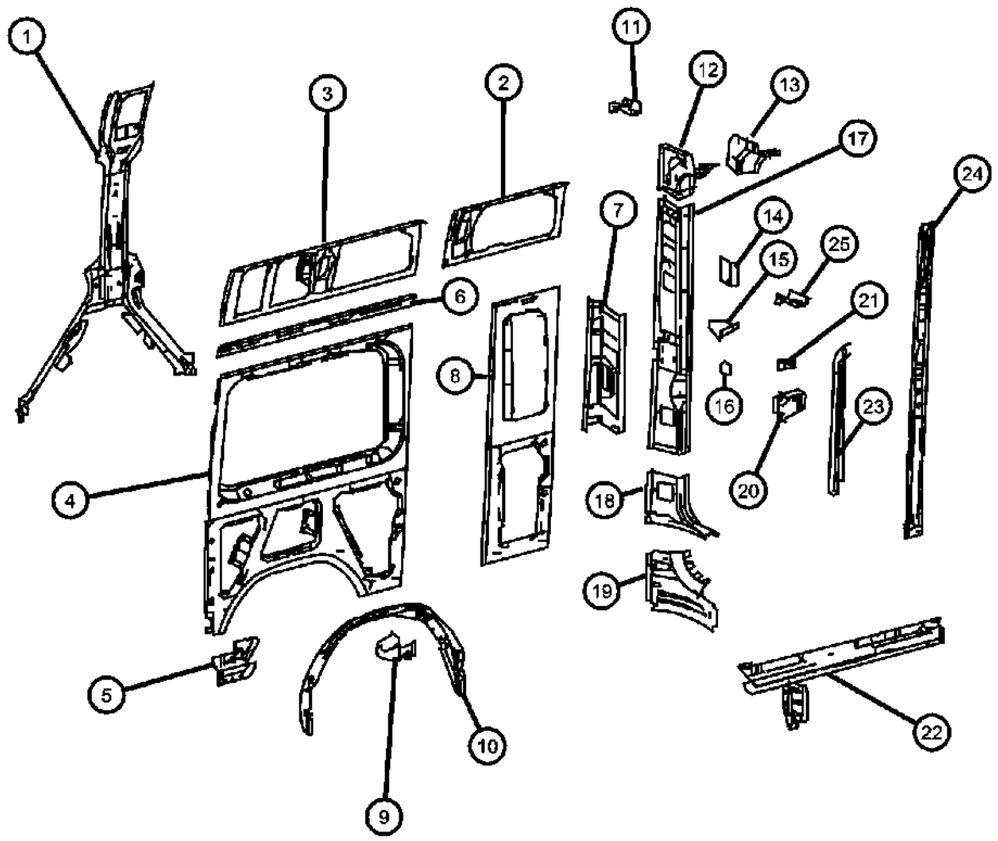

ITEM	PART NUMBER	QTY	LINE	SERIES	BODY	ENGINE	TRANS	TRIM	DESCRIPTION
1	68009330AA	1	2, 3, 6, 7		15, 17, 55				REINFORCEMENT, Side Panel
2	68008650AA	1	2, 3, 6, 7		17				REINFORCEMENT, Roof Panel
3									REINFORCEMENT, Roof Panel
	68009272AA	1	2, 3, 6, 7		17				
	68008640AA	1	2, 3, 6, 7		13, 53				[5CF]
	68008644AA	1	2, 3, 6, 7		15, 55				[5CG]
4	68008710AA	1	2, 3, 6, 7		15, 17, 55				PANEL, Side, Side Panel Inside Rear
5	68008730AA	1	2, 3, 6, 7		15, 17, 55				REINFORCEMENT, Side Panel
6	68008642AA	1	2, 3, 6, 7		13, 53				REINFORCEMENT, Roof Panel, Side Panel Inside, Roof Rail
7	68009232AA	1	2, 3, 6, 7		13, 15, 17, 53, 55				REINFORCEMENT, Side Panel Outside D-Pillar
8	68009319AA	1	2, 3, 6, 7		17				PANEL, Inner
9	68009224AA	1	2, 3, 6, 7		13, 15, 17, 53, 55				REINFORCEMENT, Hinge Bottom Right
10									PANEL, Wheelhouse
	68009347AA	1	2, 3, 6, 7						[ZU7]
	68009351AA	1	3, 7		13, 15, 17				
11									BRACKET
	68008655AA	3	2, 3, 6, 7		13, 15, 17, 53, 55				[D05]
	68008614AA	2	2, 3, 6, 7						[D03+T16]
	68008615AA	5	2, 3, 6, 7		13, 15, 17, 53, 55				[T16]
12									PLATE
	68005147AA	1	2, 3, 6, 7		13, 15, 17, 53, 55				[D03,D05,D06] Side Panel Inside D-Pillar
	68009338AA	1	2, 3, 6, 7		13, 15, 17, 53, 55				
13									REINFORCEMENT
	68009345AA	1	2, 3, 6, 7		13, 15, 17, 53, 55				
	68009346AA	1	2, 3, 6, 7		13, 15, 17, 53, 55				High or Super High Roof
14	68008763AA	1	2, 3, 6, 7		13, 15, 17, 53, 55				REINFORCEMENT
15	68009233AA	1	2, 3, 6, 7		13, 15, 17, 53, 55				BRACKET

SPRINTER (VB)

SERIES	LINE	BODY	ENGINE	TRANSMISSION
L = LOWLINE	3 = HD DODGE 2WD 6 = Lt. Duty DODGE 4WD 2 = Med. Duty DODGE 2WD 7 = Med. Duty DODGE 4WD	17 = VAN WHEEL BASE 7 55 = WAGON WHEEL BASE 5 15 = VAN WHEEL BASE 5 53 = 119 WB 13 = 119 WB 05 = CAB CHASSIS WHEEL BASE 5 03 = CAB CHASSIS WHEEL BASE 3	EG2 = 3.5L V6 Gas Engine EXM = 3.0L V6 Turbo Diesel Engine	DGZ = 5-Speed Auto W5A380 Transmission

Roof Panel
Figure 60-908

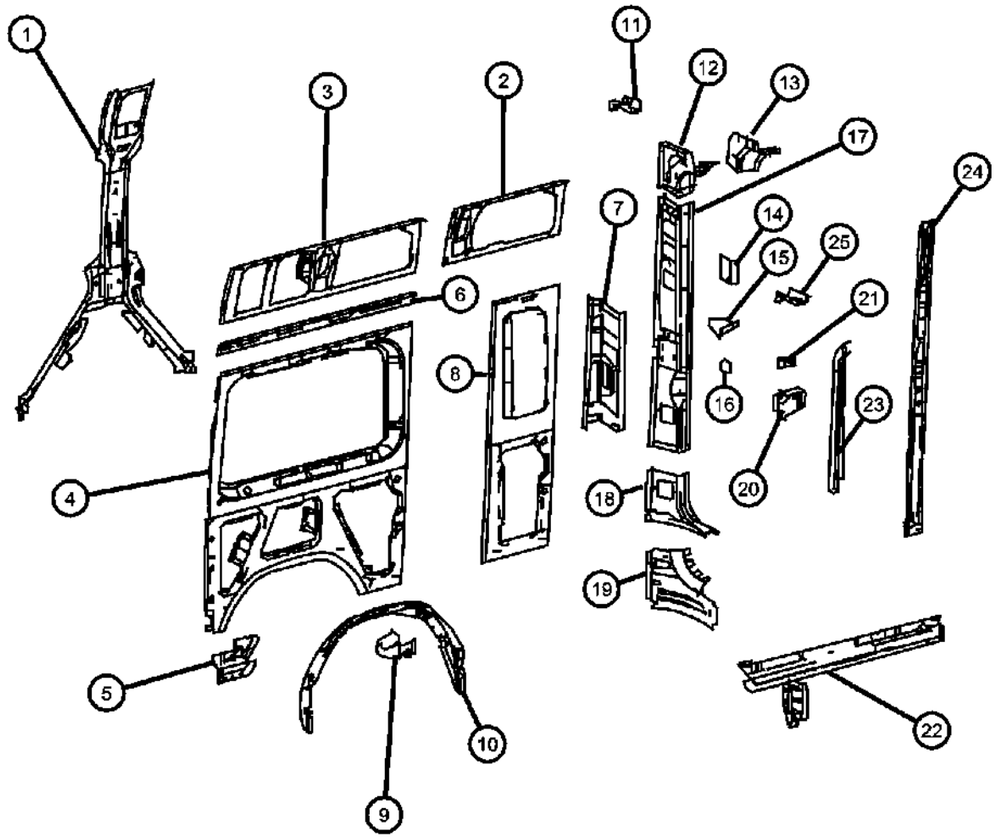

ITEM	PART NUMBER	QTY	LINE	SERIES	BODY	ENGINE	TRANS	TRIM	DESCRIPTION
16	68008757AA	1	2, 3, 6, 7		13, 15, 17, 53, 55				BRACKET
17	68008754AA	1	2, 3, 6, 7		13, 15, 17, 53, 55				PANEL, D Pillar
18	68009343AA	1	2, 3, 6, 7		13, 15, 17, 53, 55				REINFORCEMENT
19	68009344AA	1	2, 3, 6, 7		13, 15, 17, 53, 55				REINFORCEMENT
20	68009219AA	1	2, 3, 6, 7		13, 15, 17, 53, 55				REINFORCEMENT
21									REINFORCEMENT
	68009326AA	1	2, 3, 6, 7		13, 15, 17, 53, 55				
	68009328AA	1	2, 3, 6, 7		13, 15, 17, 53, 55				Side Panel Outside D-Pillar
22									REINFORCEMENT, Side Panel
	68008716AA	1	2, 3, 6, 7		15, 55				Side Panel Inside -Rear
	68008718AA	1	2, 3, 6, 7		17				
23									PLATE
	68009230AA	1	2, 3, 6, 7		13, 15, 17, 53, 55				
	68009231AA	1	2, 3, 6, 7		13, 15, 17, 53, 55				High and Super High Roof
24	68009335AA	1	2, 3, 6, 7		17				PANEL, D Pillar
25	68009778AA	1	2, 3, 6, 7		13, 15, 17, 53, 55				BRACKET, Roof, Roof Bow

SPRINTER (VB)

SERIES	LINE	BODY	ENGINE	TRANSMISSION
L = LOWLINE	3 = HD DODGE 2WD 6 = Lt. Duty DODGE 4WD 2 = Med. Duty DODGE 2WD 7 = Med. Duty DODGE 4WD	17 = VAN WHEEL BASE 7 55 = WAGON WHEEL BASE 5 15 = VAN WHEEL BASE 5 53 = 119 WB 13 = 119 WB 05 = CAB CHASSIS WHEEL BASE 5 03 = CAB CHASSIS WHEEL BASE 3	EG2 = 3.5L V6 Gas Engine EXM = 3.0L V6 Turbo Diesel Engine	DGZ = 5-Speed Auto W5A380 Transmission

Super High Roof
Figure 60-910

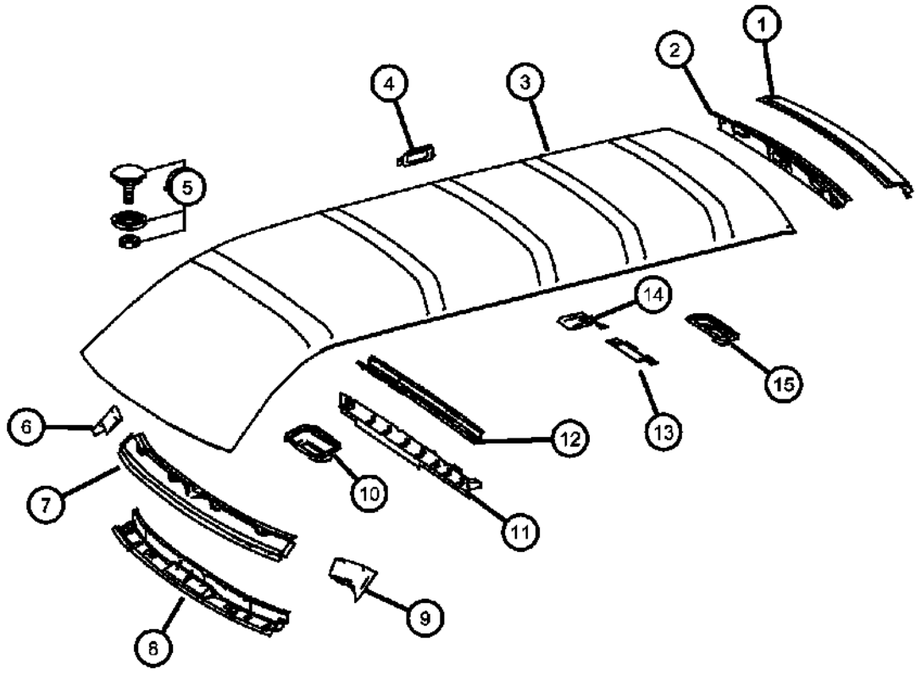

ITEM	PART NUMBER	QTY	LINE	SERIES	BODY	ENGINE	TRANS	TRIM	DESCRIPTION
1									SUPPORT, Roof
	68009752AA	1	2, 3, 6, 7		13, 15, 17, 53, 55				With [LPA]
	68009754AA	1	2, 3, 6, 7		13, 15, 17, 53, 55				Without [LPA]
2	68009757AA	1	2, 3, 6, 7		13, 15, 17, 53, 55				SUPPORT, Roof
3									ROOF
	68030769AA	1	2, 3, 6, 7		15				Without [NHY]
	68030773AA	1	2, 3, 6, 7		17				
	68030775AA	1	2, 3, 6, 7		17				With [5CK] [58N]
	68030761AA	1	2, 3, 6, 7		15				
4	68009791AA	1	2, 3, 6, 7		13, 15, 17, 53, 55				BRACKET, Cargo Lamp
5	68013418AA	1	2, 3, 6, 7						COVER
6	68033263AA	1	2, 3, 6, 7						COVERLeft
7									SUPPORT, Roof
	68009715AA	1	2, 3, 6, 7		13, 15, 17, 53, 55				
		1	3, 7		03, 05				
8	68009764AA	1	2, 3, 6, 7						SUPPORT, Roof
9	68033264AA	1	2, 3, 6, 7						COVERRight
10	68033254AA	1	2, 3, 6, 7						BRACKET
11	68009778AA	1	2, 3, 6, 7		13, 15, 17, 53, 55				BRACKET, Roof
12									BOW, Roof
	68009770AA	6	2, 3, 6, 7		13, 15, 17, 53, 55				
	68009771AA	6	2, 3, 6, 7		13, 53				With [CTA]
13	68009780AA	2	2, 3, 6, 7		13, 15, 17, 53, 55				BRACKET, Cargo Lamp
14	68009779AA	2	2, 3, 6, 7		15, 17				BRACKET, Cargo Lamp
15	68017908AA	1	2, 3, 6, 7		13, 15, 17, 53, 55				BRACKET

SPRINTER (VB)

SERIES	LINE	BODY	ENGINE	TRANSMISSION
L = LOWLINE	3 = HD DODGE 2WD 6 = Lt. Duty DODGE 4WD 2 = Med. Duty DODGE 2WD 7 = Med. Duty DODGE 4WD	17 = VAN WHEEL BASE 7 55 = WAGON WHEEL BASE 5 15 = VAN WHEEL BASE 5 53 = 119 WB 13 = 119 WB 05 = CAB CHASSIS WHEEL BASE 5 03 = CAB CHASSIS WHEEL BASE 3	EG2 = 3.5L V6 Gas Engine EXM = 3.0L V6 Turbo Diesel Engine	DGZ = 5-Speed Auto W5A380 Transmission

High Roof Panel
Figure 60-915

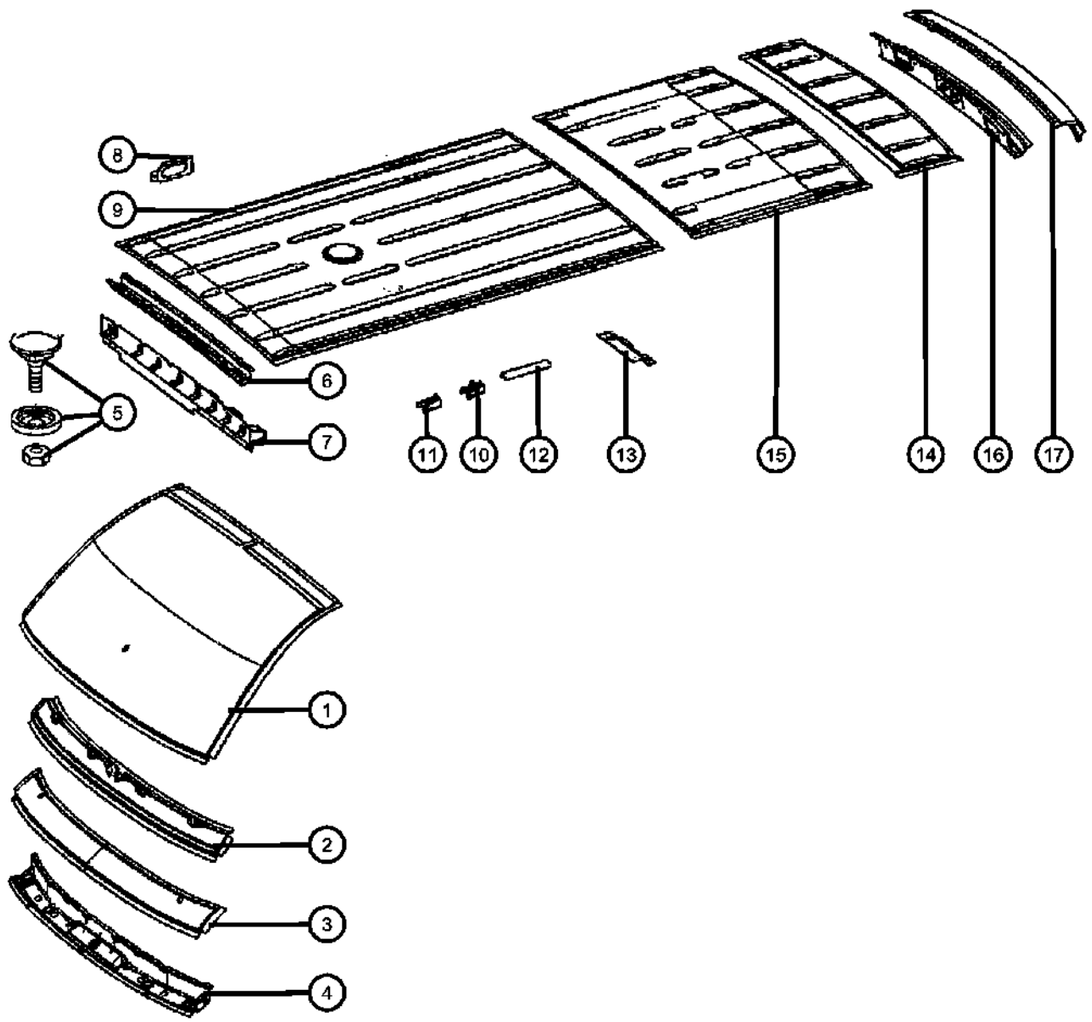

ITEM	PART NUMBER	QTY	LINE	SERIES	BODY	ENGINE	TRANS	TRIM	DESCRIPTION
1	68009718AA	1	2, 3, 6, 7		13, 15, 17, 53, 55				PANEL, Roof
2	68009715AA	1	2, 3, 6, 7		13, 15, 17, 53, 55				SUPPORT, Roof
3	68009719AA	1	3, 7		03, 05				SUPPORT, Roof
4	68009764AA	1	2, 3, 6, 7						SUPPORT, Roof
5	68013418AA	1	2, 3, 6, 7						COVER
6	68009770AA	6	2, 3, 6, 7		13, 15, 17, 53, 55				BOW, Roof
7	68009778AA	1	2, 3, 6, 7		13, 15, 17, 53, 55				BRACKET, Roof
8	68009791AA	1	2, 3, 6, 7		13, 15, 17, 53, 55				BRACKET, Cargo Lamp
9	68009728AA	1	2, 3, 6, 7		13, 15, 17, 53, 55				PANEL, Roof
10	68009792AA	2	2, 3, 6, 7		53, 55				BOW, Roof
11	68009794AA	4	2, 3, 6, 7		53, 55				BOW, Roof
12	68014272AA	1	2, 3, 6, 7		13, 15, 17, 53, 55				BOW, Roof
13	68009780AA	2	2, 3, 6, 7		13, 15, 17, 53, 55				BRACKET, Cargo Lamp
14	68009746AA	1	2, 3, 6, 7		13, 15, 53, 55				PANEL, Roof
15	68009751AA	2	2, 3, 6, 7		15, 17, 55				PANEL, Roof
16	68009757AA	1	2, 3, 6, 7		13, 15, 17, 53, 55				SUPPORT, Roof
17	68009754AA	1	2, 3, 6, 7		13, 15, 17, 53, 55				SUPPORT, Roof

SPRINTER (VB)

SERIES	LINE	BODY	ENGINE	TRANSMISSION
L = LOWLINE	3 = HD DODGE 2WD 6 = Lt. Duty DODGE 4WD 2 = Med. Duty DODGE 2WD 7 = Med. Duty DODGE 4WD	17 = VAN WHEEL BASE 7 55 = WAGON WHEEL BASE 5 15 = VAN WHEEL BASE 5 53 = 119 WB 13 = 119 WB 05 = CAB CHASSIS WHEEL BASE 5 03 = CAB CHASSIS WHEEL BASE 3	EG2 = 3.5L V6 Gas Engine EXM = 3.0L V6 Turbo Diesel Engine	DGZ = 5-Speed Auto W5A380 Transmission

Low Roof Panel
Figure 60-920

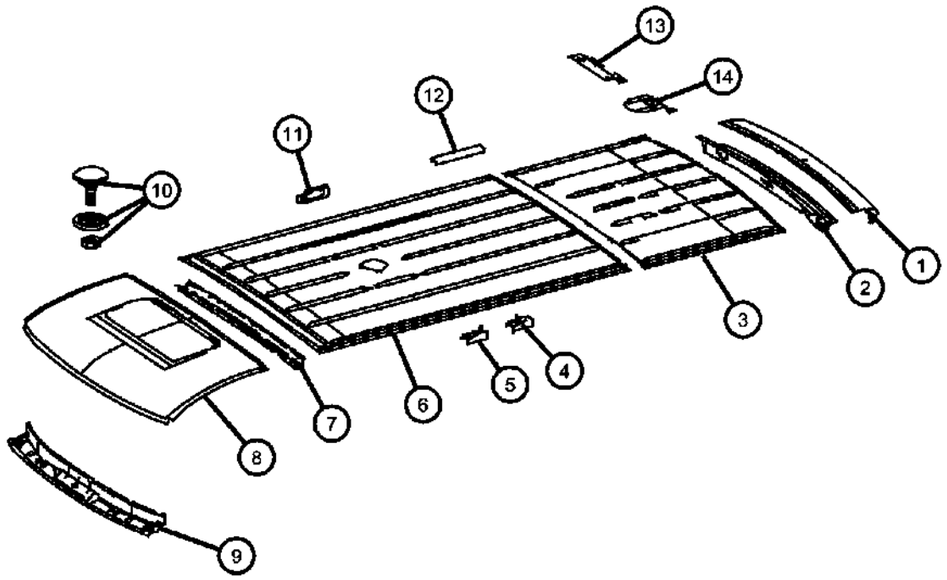

ITEM	PART NUMBER	QTY	LINE	SERIES	BODY	ENGINE	TRANS	TRIM	DESCRIPTION
1	68009755AA	1	2, 3, 6, 7		13, 15, 17, 53, 55				SUPPORT, Roof
2	68009756AA	1	2, 3, 6, 7		13, 15, 17, 53, 55				SUPPORT, Roof
3	68009749AA	1	2, 3, 6, 7		13, 53				PANEL, RoofRear
4	68009792AA	2	2, 3, 6, 7		53, 55				BOW, Roof
5	68009794AA	4	2, 3, 6, 7		53, 55				BOW, Roof
6	68009727AA	1	2, 3, 6, 7		13, 15, 17, 53, 55				PANEL, RoofCenter
7	68009771AA	6	2, 3, 6, 7		13, 53				BOW, Roof
8	68009717AA	1	2, 3, 6, 7						PANEL, Roof
9	68009764AA	1	2, 3, 6, 7						SUPPORT, Roof
10	68013418AA	1	2, 3, 6, 7						COVER
11	68009791AA	1	2, 3, 6, 7		13, 15, 17, 53, 55				BRACKET, Cargo Lamp
12	68009795AA	2	2, 3, 6, 7		53, 55				BRACKET
13	68009780AA	2	2, 3, 6, 7		13, 15, 17, 53, 55				BRACKET, Cargo Lamp
14	68009779AA	2	2, 3, 6, 7		15, 17				BRACKET, Cargo Lamp

SPRINTER (VB)

SERIES	LINE	BODY	ENGINE	TRANSMISSION
L = LOWLINE	3 = HD DODGE 2WD 6 = Lt. Duty DODGE 4WD 2 = Med. Duty DODGE 2WD 7 = Med. Duty DODGE 4WD	17 = VAN WHEEL BASE 7 55 = WAGON WHEEL BASE 5 15 = VAN WHEEL BASE 5 53 = 119 WB 13 = 119 WB 05 = CAB CHASSIS WHEEL BASE 5 03 = CAB CHASSIS WHEEL BASE 3	EG2 = 3.5L V6 Gas Engine EXM = 3.0L V6 Turbo Diesel Engine	DGZ = 5-Speed Auto W5A380 Transmission

Sunroof Glass and Component Parts
Figure 60-1005

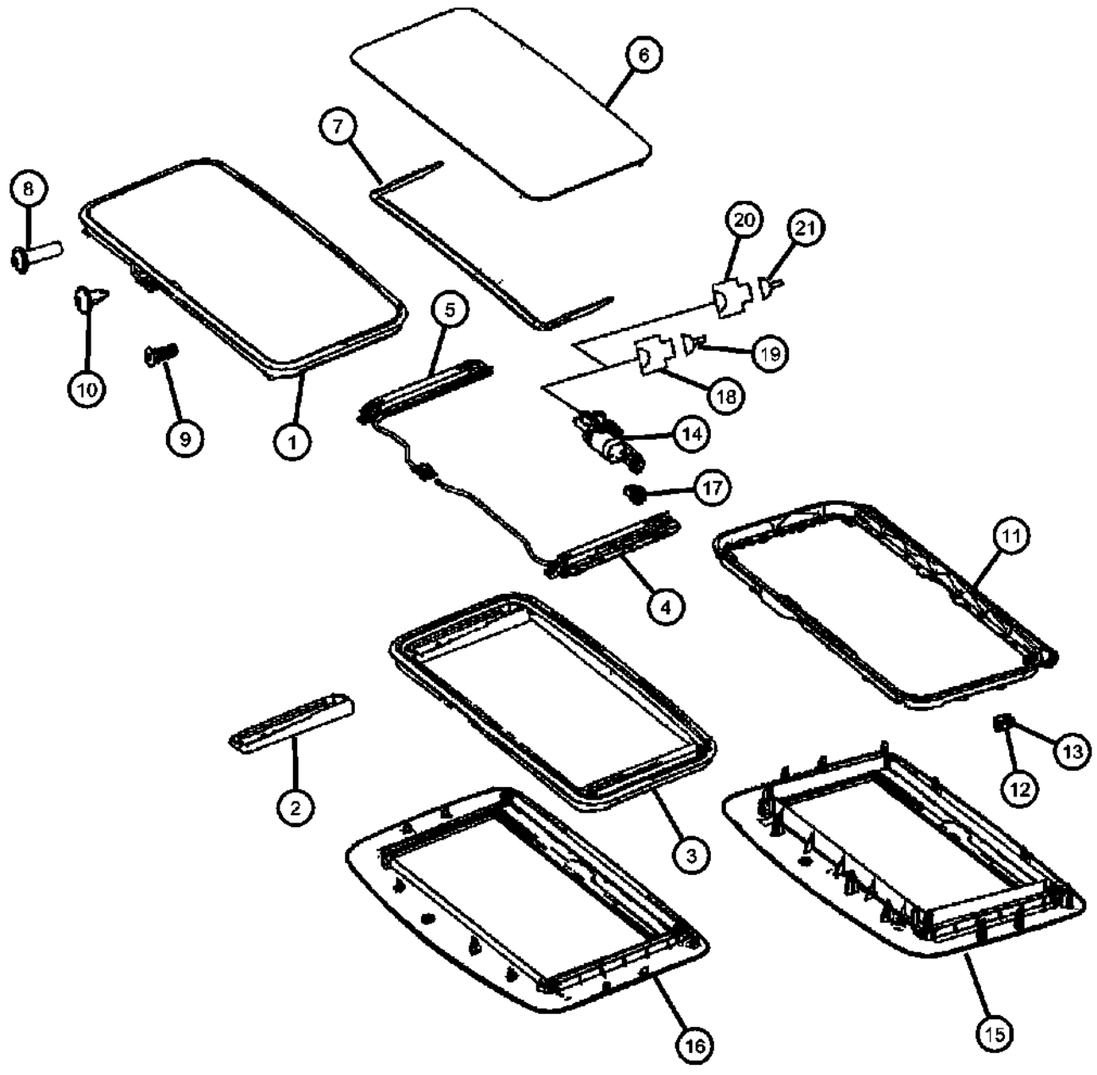

ITEM	PART NUMBER	QTY	LINE	SERIES	BODY	ENGINE	TRANS	TRIM	DESCRIPTION
1									GLASS, Sunroof
	68018812AA	1	2, 6		53, 55				With [GW9 And Or GWA]
		1	2, 3, 6, 7		03, 05, 13, 53, 55				With [GW9 And Or GWA]
2									RAIL, Roof
	68018814AA	1	2, 3, 6, 7		03, 05, 53, 55				With [GW9 And Or GWA]
		1	2, 3, 6, 7		13, 15, 17				With [GW9 And Or GWA]
3									FRAME, Sunroof
	68018815AA	1	2, 3, 6, 7		03, 05, 53, 55				With [GW9 And Or GWA]
		1	2, 3, 6, 7		13, 15, 17				With [GW9 And Or GWA]
4									GUIDE, Sunroof Track
	68018817AA	1	2, 3, 6, 7		03, 05, 53, 55				With [GW9 And Or GWA], Left Rear
		1	2, 3, 6, 7		13, 15, 17				With [GW9 And Or GWA], Left Front
5									GUIDE, Sunroof Track
	68018816AA	1	2, 3, 6, 7		03, 05, 53, 55				With [GW9 And Or GWA], Right Rear
		1	2, 3, 6, 7		13, 15, 17				With [GW9 And Or GWA], Right Front
6									SUNSHADE, Sunroof
	68018818AA	1	2, 3, 6, 7		03, 05, 53, 55				With [GW9 And Or GWA]
		1	2, 3, 6, 7		13, 15, 17				With [GW9 And Or GWA]
7									DEFLECTOR, Sunroof Wind
	68018819AA	1	2, 3, 6, 7		03, 05, 53, 55				With [GW9 And Or GWA]
		1	2, 3, 6, 7		13, 15, 17				With [GW9 And Or GWA]
8									SCREW, Tapping Round Head, M5.0X2.24X20.00
	06104635AA	15	3, 7		03, 05				With [GW9 And Or GWA]
		15	2, 3, 6, 7		13, 15, 17, 53, 55				With [GW9 And Or GWA], Rear
		15	2, 3, 6, 7		13, 15, 17, 53, 55				With [GW9 And Or GWA], Front
9									SCREW, 5x16
	06104658AA	8	2, 3, 6, 7		13, 15, 17				With [GW9 And Or GWA]

SPRINTER (VB)

SERIES	LINE	BODY	ENGINE	TRANSMISSION
L = LOWLINE	3 = HD DODGE 2WD 6 = Lt. Duty DODGE 4WD 2 = Med. Duty DODGE 2WD 7 = Med. Duty DODGE 4WD	17 = VAN WHEEL BASE 7 55 = WAGON WHEEL BASE 5 15 = VAN WHEEL BASE 5 53 = 119 WB 13 = 119 WB 05 = CAB CHASSIS WHEEL BASE 5 03 = CAB CHASSIS WHEEL BASE 3	EG2 = 3.5L V6 Gas Engine EXM = 3.0L V6 Turbo Diesel Engine	DGZ = 5-Speed Auto W5A380 Transmission

Sunroof Glass and Component Parts
Figure 60-1005

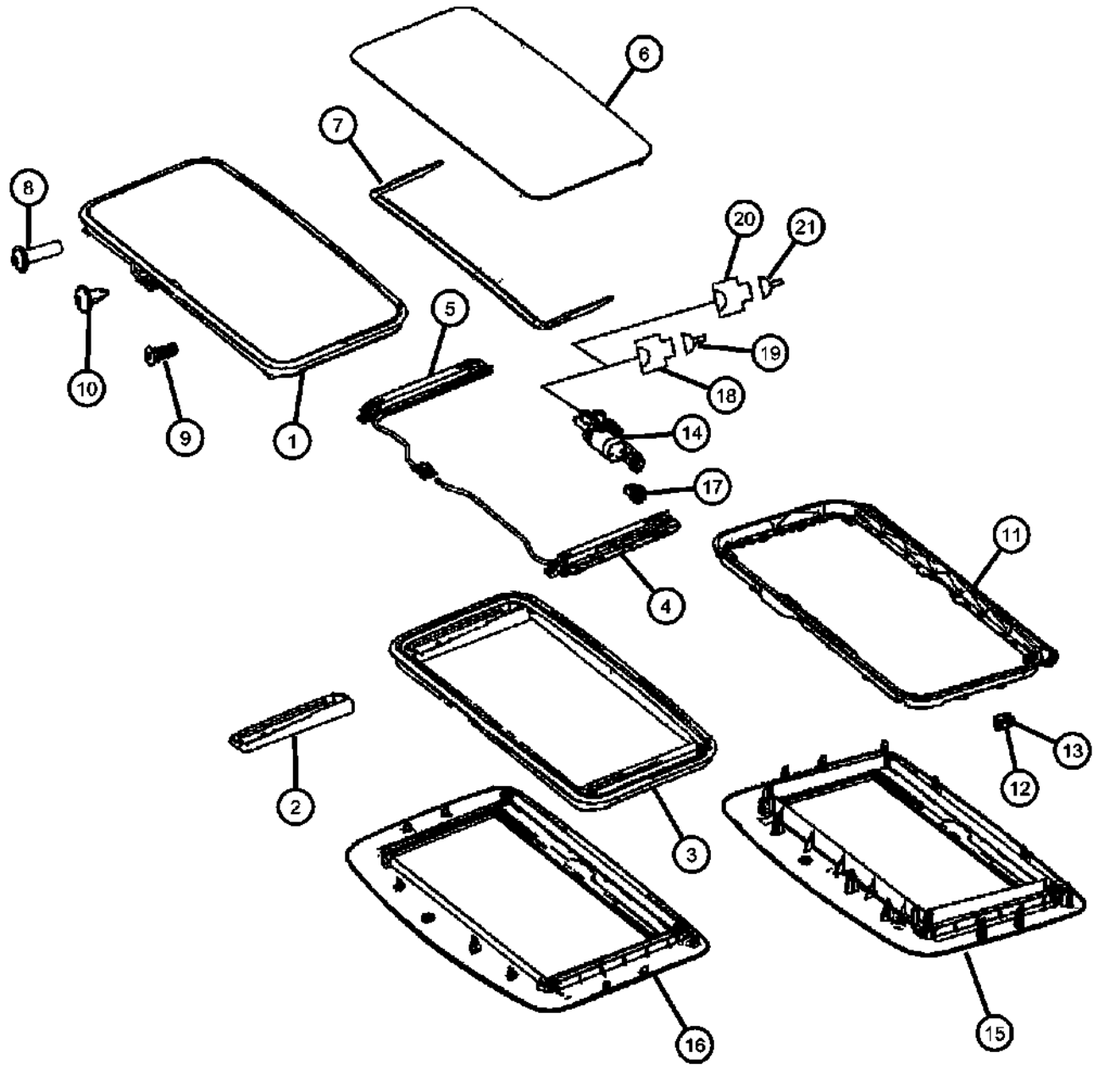

ITEM	PART NUMBER	QTY	LINE	SERIES	BODY	ENGINE	TRANS	TRIM	DESCRIPTION
		8	2, 3, 6, 7		03, 05, 53, 55				With [GW9 And Or GWA]
10									SCREW, Sun Roof
	68018813AA	2	2, 3, 6, 7		03, 05, 53, 55				With [GW9 And Or GWA]
		2	2, 3, 6, 7		13, 15, 17				With [GW9 And Or GWA]
11									FRAME, Sunroof
	68018820AA	1	2, 3, 6, 7		13, 15, 17, 53, 55				With [GW9 And Or GWA]
		1	2, 3, 6, 7		03, 05				With [GW9 And Or GWA]
12									CLIP, Sunroof
	68018821AA	1	2, 3, 6, 7		03, 05, 53, 55				With [GW9 And Or GWA]
		1	2, 3, 6, 7		13, 15, 17				With [GW9 And Or GWA]
13	68020388AA	11	2, 3, 6, 7						CLIP, Retainer, Parts Kit - Clips / With [GW9 And Or GWA]
14									MOTOR/MODULE, Sunroof
	68018822AA	1	3, 7		03, 05				With [GW9 And Or GWA], Front
		1	2, 3, 6, 7		13, 15, 17, 53, 55				With [GW9 And Or GWA], Front
		1	2, 3, 6, 7		13, 15, 17, 53, 55				With [GW9 And Or GWA], Rear
15	68018827AA	1	2, 3, 6, 7		13, 15, 17, 53, 55				TRIM, Sunroof opening, Rear Cover Only / With [GW9]
16	68018823AA	1	2, 3, 6, 7		03, 05, 53, 55				COVER, Sunroof Mechanism, Front Cover Only / With [GWA]
17									CONNECTOR, Wiring
	68011368AA	1	2, 3, 6, 7		03, 05, 53, 55				[6 Pin]
		1	2, 3, 6, 7		13, 15, 17				[6 Pin]
18									CONNECTOR
	68011254AA	1	2, 3, 6, 7		13, 15, 17				Rear Connector [6-Pin]
		1	2, 3, 6, 7		03, 05, 53, 55				Rear Connector [6-Pin]
19	05133945AA	AR	2, 3, 6, 7						TERMINAL, [1.0 - 2.5 MM]
20									CONNECTOR
	68011254AA	1	2, 3, 6, 7		13, 15, 17				[6 - PIN]

SPRINTER (VB)

SERIES	LINE	BODY	ENGINE	TRANSMISSION
L = LOWLINE	3 = HD DODGE 2WD 6 = Lt. Duty DODGE 4WD 2 = Med. Duty DODGE 2WD 7 = Med. Duty DODGE 4WD	17 = VAN WHEEL BASE 7 55 = WAGON WHEEL BASE 5 15 = VAN WHEEL BASE 5 53 = 119 WB 13 = 119 WB 05 = CAB CHASSIS WHEEL BASE 5 03 = CAB CHASSIS WHEEL BASE 3	EG2 = 3.5L V6 Gas Engine EXM = 3.0L V6 Turbo Diesel Engine	DGZ = 5-Speed Auto W5A380 Transmission

AR = use ase required - = Non illustrrated part

<< RETURN TO GROUP INDEX

Sunroof Glass and Component Parts
Figure 60-1005

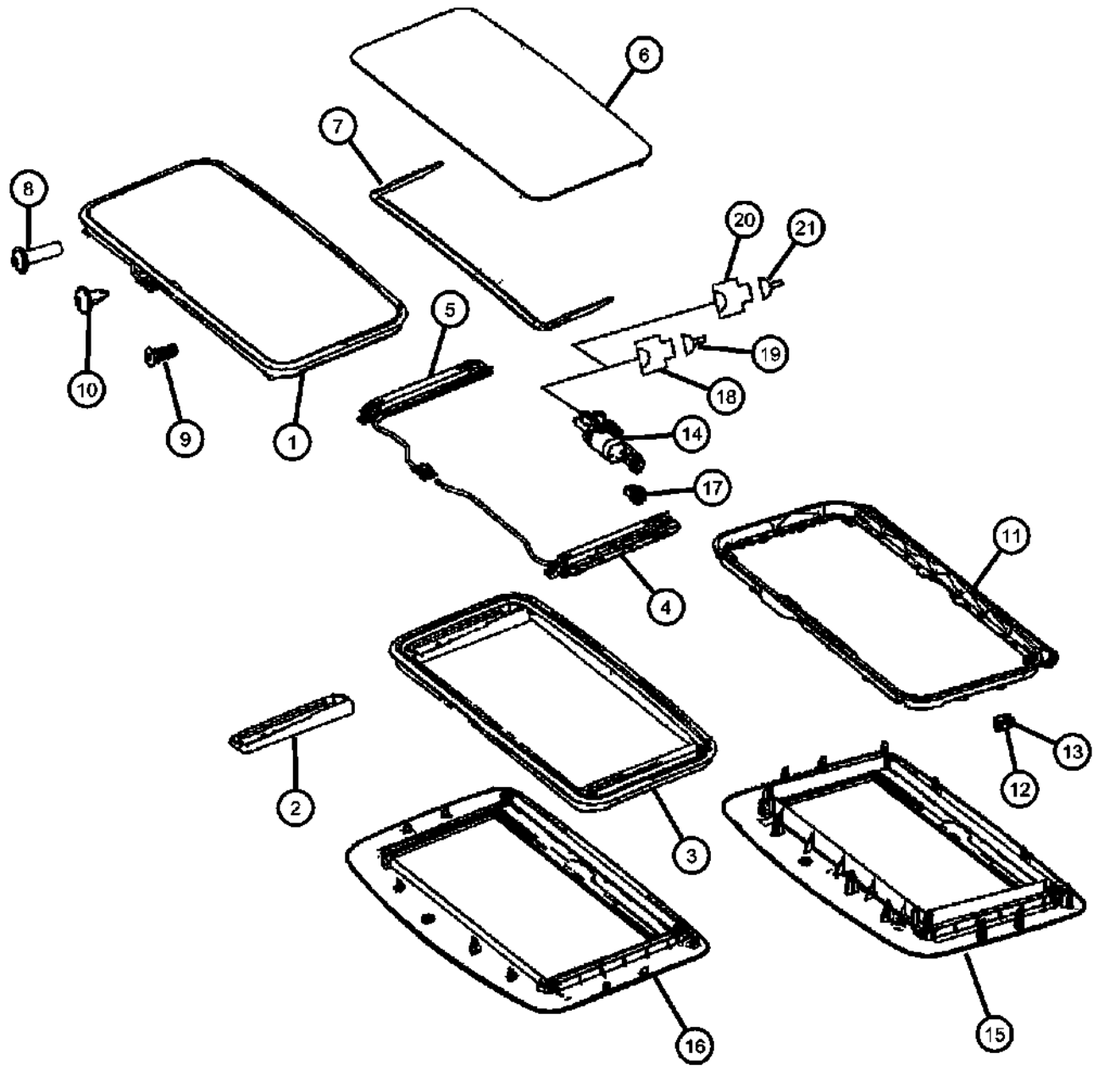

ITEM	PART NUMBER	QTY	LINE	SERIES	BODY	ENGINE	TRANS	TRIM	DESCRIPTION
		1	2, 3, 6, 7		03, 05, 53, 55				[6 - PIN]
21									TERMINAL
	05133945AA	AR	2, 3, 6, 7						[0.5 - 1.0 MM]
	05143897AA	AR	2, 3, 6, 7						[1.0 - 2.5 MM]

SPRINTER (VB)

SERIES	LINE	BODY	ENGINE	TRANSMISSION
L = LOWLINE	3 = HD DODGE 2WD 6 = Lt. Duty DODGE 4WD 2 = Med. Duty DODGE 2WD 7 = Med. Duty DODGE 4WD	17 = VAN WHEEL BASE 7 55 = WAGON WHEEL BASE 5 15 = VAN WHEEL BASE 5 53 = 119 WB 13 = 119 WB 05 = CAB CHASSIS WHEEL BASE 5 03 = CAB CHASSIS WHEEL BASE 3	EG2 = 3.5L V6 Gas Engine EXM = 3.0L V6 Turbo Diesel Engine	DGZ = 5-Speed Auto W5A380 Transmission

Sunroof Drain Hoses
Figure 60-1050

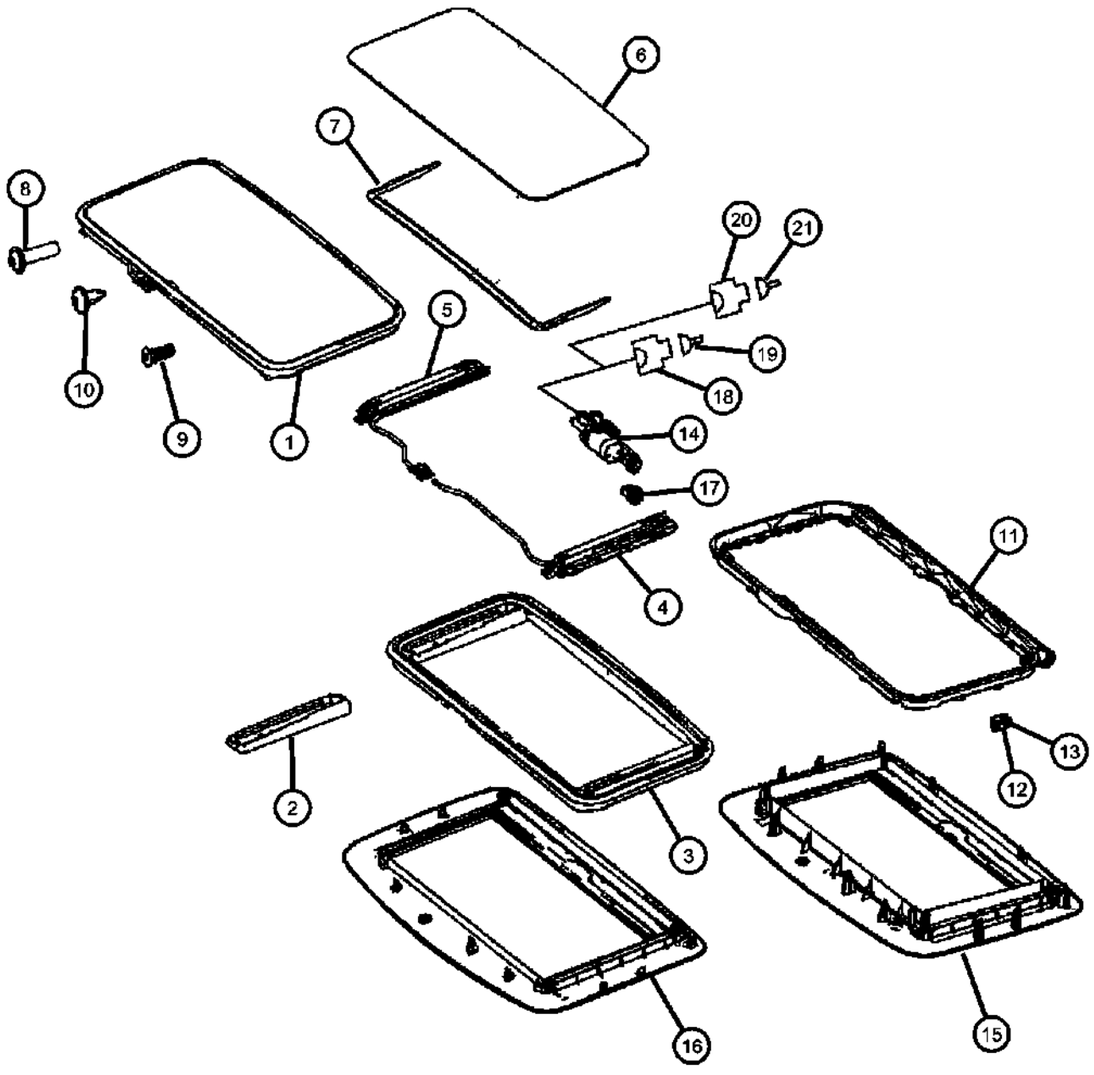

ITEM	PART NUMBER	QTY	LINE	SERIES	BODY	ENGINE	TRANS	TRIM	DESCRIPTION
1									GLASS, Sunroof
	68018812AA	1	2, 6		53, 55				With [GW9 And Or GWA]
		1	2, 3, 6, 7		03, 05, 13, 53, 55				With [GW9 And Or GWA]
2									RAIL, Roof
	68018814AA	1	2, 3, 6, 7		03, 05, 53, 55				With [GW9 And Or GWA]
		1	2, 3, 6, 7		13, 15, 17				With [GW9 And Or GWA]
3									FRAME, Sunroof
	68018815AA	1	2, 3, 6, 7		03, 05, 53, 55				With [GW9 And Or GWA]
		1	2, 3, 6, 7		13, 15, 17				With [GW9 And Or GWA]
4									GUIDE, Sunroof Track
	68018817AA	1	2, 3, 6, 7		03, 05, 53, 55				With [GW9 And Or GWA], Left Rear
		1	2, 3, 6, 7		13, 15, 17				With [GW9 And Or GWA], Left Front
5									GUIDE, Sunroof Track
	68018816AA	1	2, 3, 6, 7		03, 05, 53, 55				With [GW9 And Or GWA], Right Rear
		1	2, 3, 6, 7		13, 15, 17				With [GW9 And Or GWA], Right Front
6									SUNSHADE, Sunroof
	68018818AA	1	2, 3, 6, 7		03, 05, 53, 55				With [GW9 And Or GWA]
		1	2, 3, 6, 7		13, 15, 17				With [GW9 And Or GWA]
7									DEFLECTOR, Sunroof Wind
	68018819AA	1	2, 3, 6, 7		03, 05, 53, 55				With [GW9 And Or GWA]
		1	2, 3, 6, 7		13, 15, 17				With [GW9 And Or GWA]
8									SCREW, Tapping Round Head, M5.0X2.24X20.00
	06104635AA	15	3, 7		03, 05				With [GW9 And Or GWA]
		15	2, 3, 6, 7		13, 15, 17, 53, 55				With [GW9 And Or GWA], Rear
		15	2, 3, 6, 7		13, 15, 17, 53, 55				With [GW9 And Or GWA], Front
9									SCREW, 5x16
	06104658AA	8	2, 3, 6, 7		03, 05, 53, 55				With [GW9 And Or GWA]

SPRINTER (VB)

SERIES	LINE	BODY	ENGINE	TRANSMISSION
L = LOWLINE	3 = HD DODGE 2WD 6 = Lt. Duty DODGE 4WD 2 = Med. Duty DODGE 2WD 7 = Med. Duty DODGE 4WD	17 = VAN WHEEL BASE 7 55 = WAGON WHEEL BASE 5 15 = VAN WHEEL BASE 5 53 = 119 WB 13 = 119 WB 05 = CAB CHASSIS WHEEL BASE 5 03 = CAB CHASSIS WHEEL BASE 3	EG2 = 3.5L V6 Gas Engine EXM = 3.0L V6 Turbo Diesel Engine	DGZ = 5-Speed Auto W5A380 Transmission

Sunroof Drain Hoses
Figure 60-1050

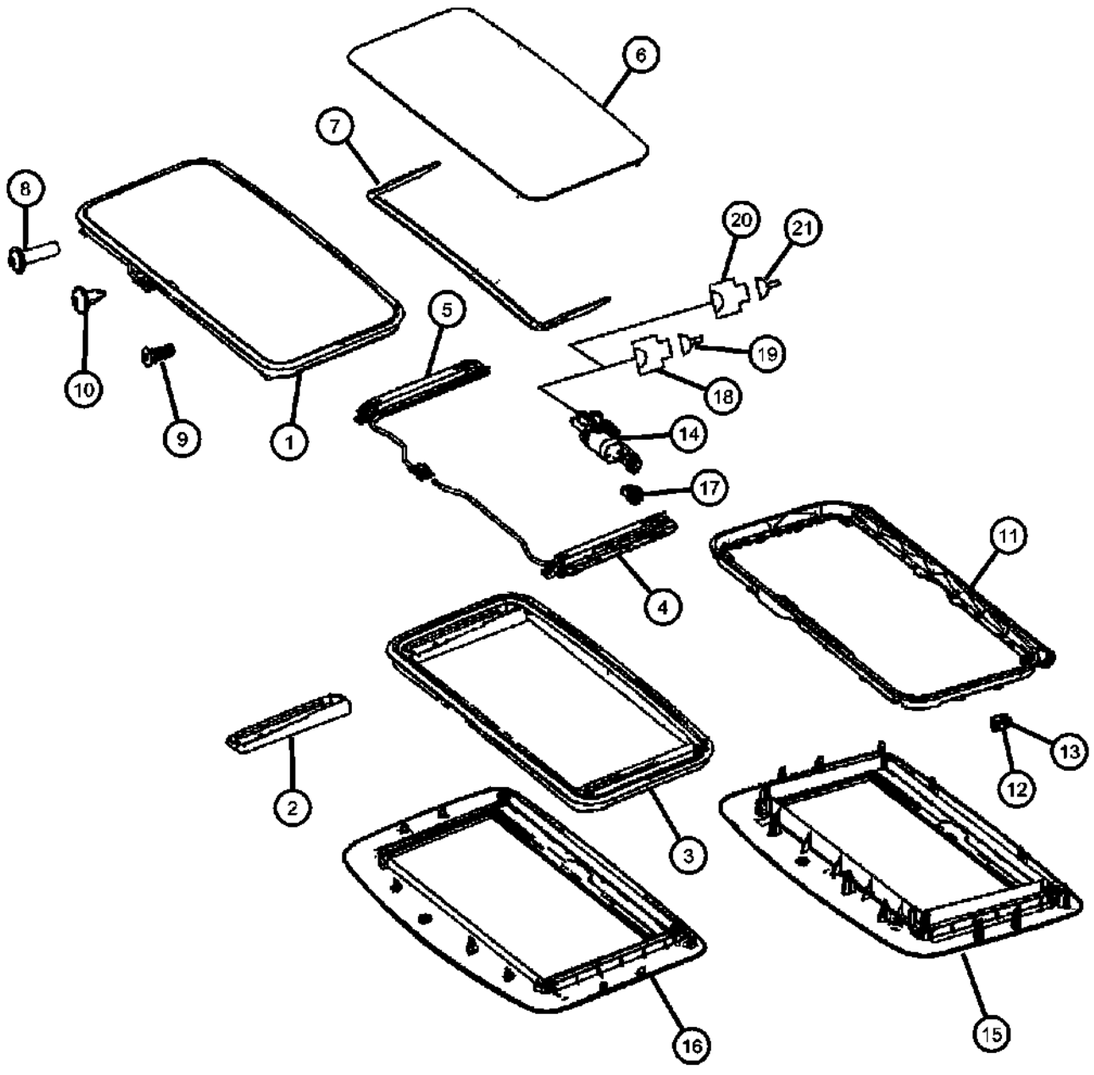

ITEM	PART NUMBER	QTY	LINE	SERIES	BODY	ENGINE	TRANS	TRIM	DESCRIPTION
		8	2, 3, 6, 7		13, 15, 17				With [GW9 And Or GWA]
10									SCREW, Sun Roof
	68018813AA	2	2, 3, 6, 7		03, 05, 53, 55				With [GW9 And Or GWA]
		2	2, 3, 6, 7		13, 15, 17				With [GW9 And Or GWA]
11									FRAME, Sunroof
	68018820AA	1	2, 3, 6, 7		13, 15, 17, 53, 55				With [GW9 And Or GWA]
		1	2, 3, 6, 7		03, 05				With [GW9 And Or GWA]
12									CLIP, Sunroof
	68018821AA	1	2, 3, 6, 7		03, 05, 53, 55				With [GW9 And Or GWA]
		1	2, 3, 6, 7		13, 15, 17				With [GW9 And Or GWA]
13	68020388AA	11	2, 3, 6, 7						CLIP, Retainer, Parts Kit - Clips / With [GW9 And Or GWA]
14									MOTOR/MODULE, Sunroof
	68018822AA	1	3, 7		03, 05				With [GW9 And Or GWA], Front
		1	2, 3, 6, 7		13, 15, 17, 53, 55				With [GW9 And Or GWA], Front
		1	2, 3, 6, 7		13, 15, 17, 53, 55				With [GW9 And Or GWA], Rear
15	68018827AA	1	2, 3, 6, 7		13, 15, 17, 53, 55				TRIM, Sunroof opening, Rear Cover Only / With [GW9]
16	68018823AA	1	2, 3, 6, 7		03, 05, 53, 55				COVER, Sunroof Mechanism, Front Cover Only / With [GWA]
17									CONNECTOR, Wiring
	68011368AA	1	2, 3, 6, 7		03, 05, 53, 55				[6 Pin]
		1	2, 3, 6, 7		13, 15, 17				[6 Pin]
18									CONNECTOR
	68011254AA	1	2, 3, 6, 7		13, 15, 17				Rear Connector [6-Pin]
		1	2, 3, 6, 7		03, 05, 53, 55				Rear Connector [6-Pin]
19	05133945AA	AR	2, 3, 6, 7						TERMINAL, [1.0 - 2.5 MM]
20									CONNECTOR
	68011254AA	1	2, 3, 6, 7		13, 15, 17				[6 - PIN]
		1	2, 3, 6, 7		03, 05, 53, 55				[6 - PIN]

SPRINTER (VB)

SERIES	LINE	BODY	ENGINE	TRANSMISSION
L = LOWLINE	3 = HD DODGE 2WD 6 = Lt. Duty DODGE 4WD 2 = Med. Duty DODGE 2WD 7 = Med. Duty DODGE 4WD	17 = VAN WHEEL BASE 7 55 = WAGON WHEEL BASE 5 15 = VAN WHEEL BASE 5 53 = 119 WB 13 = 119 WB 05 = CAB CHASSIS WHEEL BASE 5 03 = CAB CHASSIS WHEEL BASE 3	EG2 = 3.5L V6 Gas Engine EXM = 3.0L V6 Turbo Diesel Engine	DGZ = 5-Speed Auto W5A380 Transmission

Sunroof Drain Hoses
Figure 60-1050

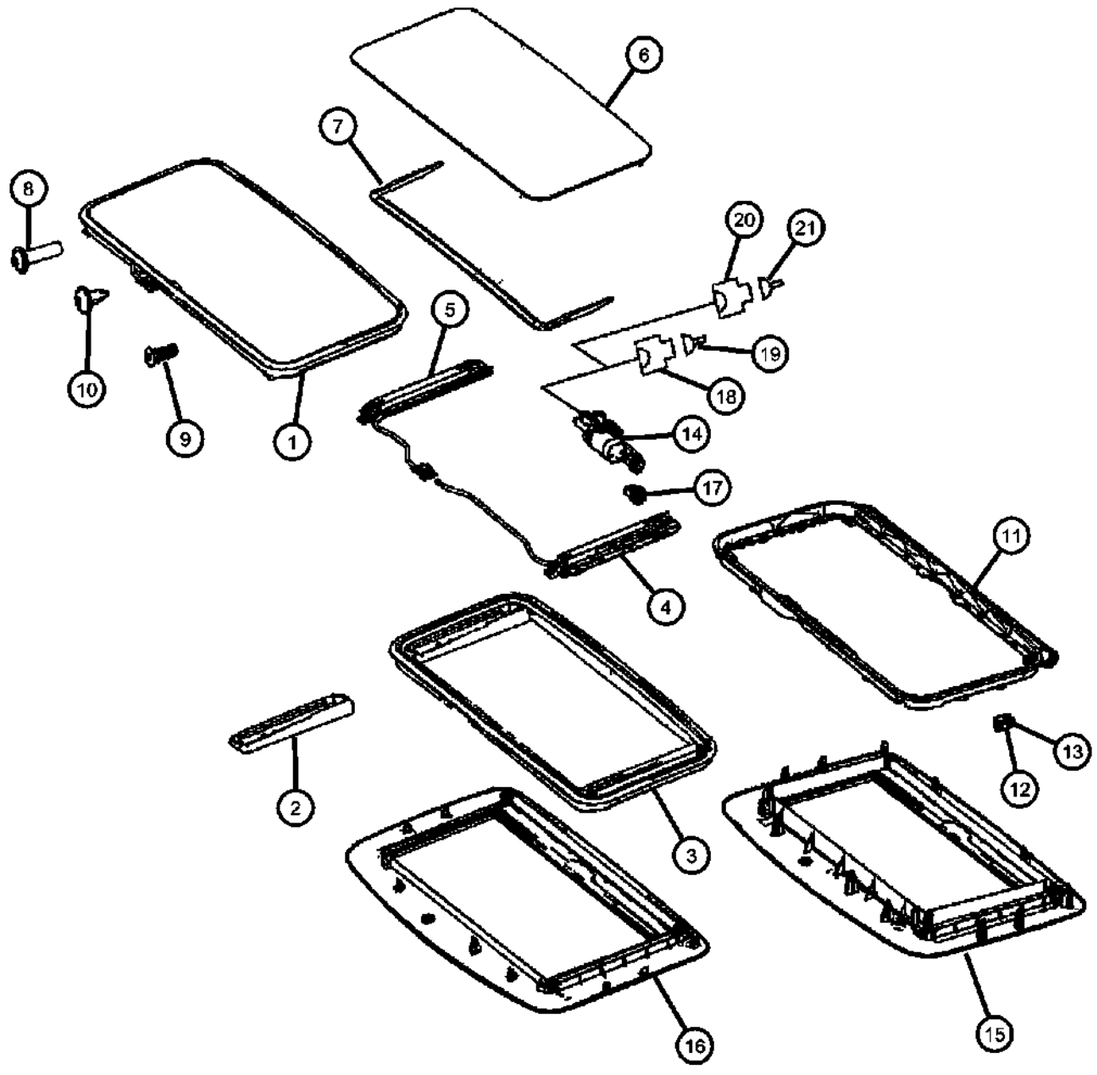

ITEM	PART NUMBER	QTY	LINE	SERIES	BODY	ENGINE	TRANS	TRIM	DESCRIPTION
21									TERMINAL
	05133945AA	AR	2, 3, 6, 7						[0.5 - 1.0 MM]
	05143897AA	AR	2, 3, 6, 7						[1.0 - 2.5 MM]

SPRINTER (VB)

SERIES	LINE	BODY	ENGINE	TRANSMISSION
L = LOWLINE	3 = HD DODGE 2WD 6 = Lt. Duty DODGE 4WD 2 = Med. Duty DODGE 2WD 7 = Med. Duty DODGE 4WD	17 = VAN WHEEL BASE 7 55 = WAGON WHEEL BASE 5 15 = VAN WHEEL BASE 5 53 = 119 WB 13 = 119 WB 05 = CAB CHASSIS WHEEL BASE 5 03 = CAB CHASSIS WHEEL BASE 3	EG2 = 3.5L V6 Gas Engine EXM = 3.0L V6 Turbo Diesel Engine	DGZ = 5-Speed Auto W5A380 Transmission

AR = use ase required - = Non illustrrated part

Roof Rack
Figure 60-1305

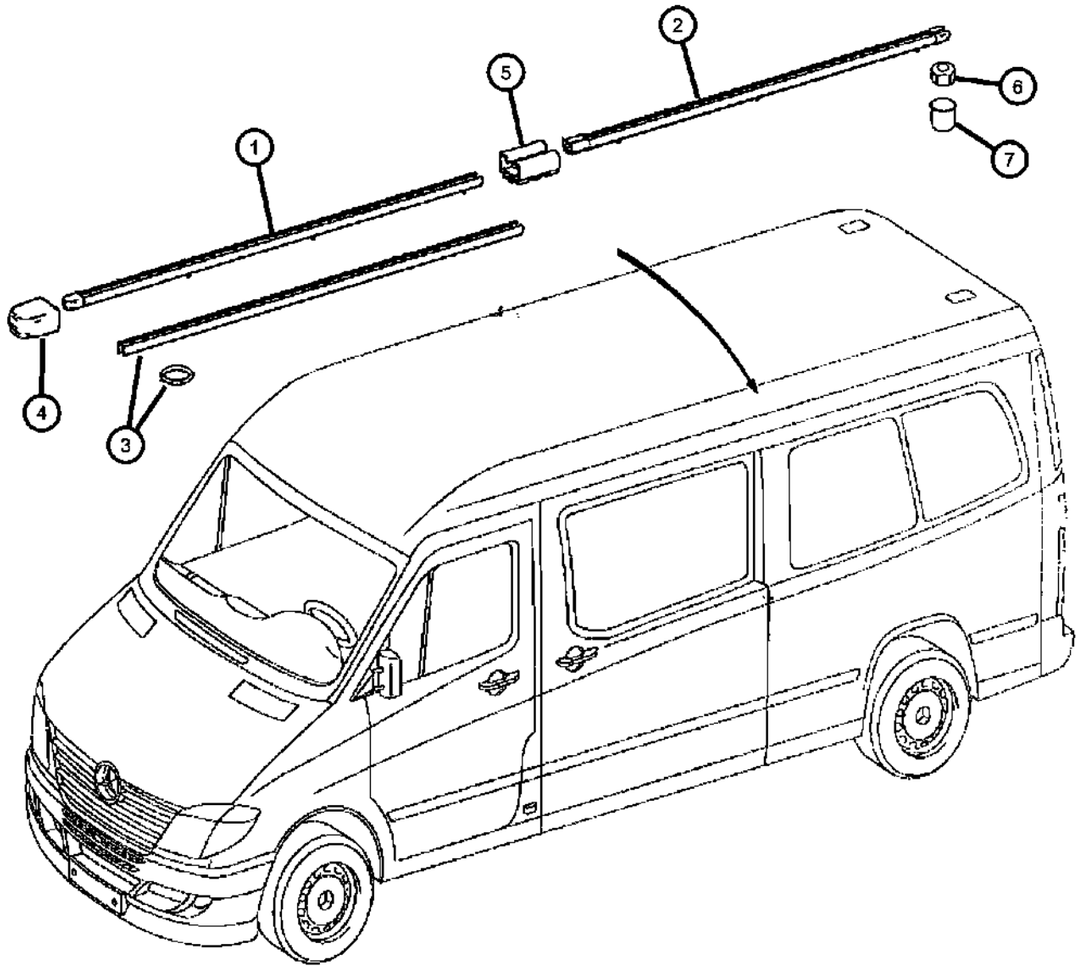

ITEM	PART NUMBER	QTY	LINE	SERIES	BODY	ENGINE	TRANS	TRIM	DESCRIPTION
1	68017893AA	2	2, 3, 6, 7		13, 15, 17, 53, 55				RAIL, RoofRight And Left
2	68017894AA	2	2, 3, 6, 7		15, 55				RAIL, Roof, 170 Inch Wheel Base, Right And Left
3	68017897AA	1	2, 3, 6, 7		13, 15, 17, 53, 55				SEAL
4	68017898AA	1	2, 3, 6, 7		13, 15, 17, 53, 55				COVER
5	68017899AA	1	2, 3, 6, 7		13, 15, 17, 53, 55				BRACKET
6									NUT, Hex
	05098361AA	16	2, 3, 6, 7		13, 53				
		22	2, 3, 6, 7		15, 55				
7	05126256AA	1	2, 3, 6, 7		15, 55				CAP

SPRINTER (VB)

SERIES	LINE	BODY	ENGINE	TRANSMISSION
L = LOWLINE	3 = HD DODGE 2WD 6 = Lt. Duty DODGE 4WD 2 = Med. Duty DODGE 2WD 7 = Med. Duty DODGE 4WD	17 = VAN WHEEL BASE 7 55 = WAGON WHEEL BASE 5 15 = VAN WHEEL BASE 5 53 = 119 WB 13 = 119 WB 05 = CAB CHASSIS WHEEL BASE 5 03 = CAB CHASSIS WHEEL BASE 3	EG2 = 3.5L V6 Gas Engine EXM = 3.0L V6 Turbo Diesel Engine	DGZ = 5-Speed Auto W5A380 Transmission