VIN PLATE DECODING INFORMATION

1	2	3	4	5	6	7	8	9	10	11	12 thru 17
Country	**Make**	**Vehicle Type**	**Other**	**Line**	**Series**	**Body Style**	**Engine**	**Check Digit**	**Model Year**	**Assy. Plant**	**Sequence No.**

The following table interprets the VIN Plate position shown above.

Position	Interpretation	Codes = Description
1	Country of Origin	W = DaimlerChrysler AG
2	Assembler	D = Sprinter
3	Vehicle Type	W = Dodge Bus X = Dodge Incomplete 8 = Dodge Multipurpose Passenger Vehicle 0 = Dodge Wagon P = Freightliner Incomplete R = Freightliner Multipurpose Passenger Vehicle Y = Freightliner Wagon 1 = Sprinter Cab-Chassis 3 = Sprinter Multipurpose Passenger Vehicle 5 = Sprinter Multipurpose Passenger Vehicle 2 = Sprinter Truck
4	GVWR & Pass. Safety	W = 4 X 2 Multipurpose Passenger Vehicle Y = 4 X 2 Truck P = 4 X 2 - U.S. B = 4 X 4 - Canada X = 4 X 2 Cab-Chassis
5	Vehicle Line	D = Combine with position 6
6	Series	1 = 2500C/C2500/P2500 3000 mm 15 in. wheel 8,001 - 9,000 lbs. Class G 2 = 2500C/C2500/P2500 3550 mm 15 in. wheel 8,001 - 9,000 lbs. Class G 6 = 2500C/C2500/P2500 3567 mm 16in. wheel 8,001 - 9,000 lbs. Class G 3 = 2500C/C2500/P2500 4025 mm 15 in. wheel 8,001 - 9,000 lbs. Class G 7 = 2500C/C2500/P2500 4042 mm 16in. wheel 8,001 - 9,000 lbs. Class G 8 = 3500C 3567 mm 16in. wheel 10,001 - 14,000 lbs. Class 3 9 = 3500C 4042 mm 16 in. wheel 10,001 - 14,000 lbs. Class 3 4 = 3500C/C3500 3550 mm 15 in. wheel 9,001 - 10,000 lbs. Class H 5 = 3500C/C3500 4025 mm 15 in. wheel 9,001 - 10,000 lbs. Class H
7	Body Style	4 = Combine with position 8
8	Engine	3 = 2.7L 45 State Diesel, Hydraulic Brakes 2 = 2.7L 50 State Diesel, Hydraulic Brakes 4 = 2.7L 50 State Diesel, Hydraulic Brakes 1 = 2.7L I-5 Diesel, Hydraulic Brakes
9	Check Digit	0 = Check Digit
10	Model Year	7 = 2007
11	Assembly Plant	5 = Dusseldorf R = Dusseldorf
12 thru 17	Vehicle Build Sequence	Model Year Assembly Sequence

Group - 2

Front Suspension & Drive

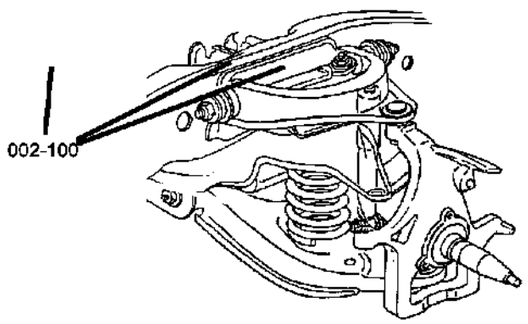

Illustration Title — Group-Fig. No.

Front Suspension

Front Suspension Leaf Spring..... Fig. 2 - 110
Front Suspension Leaf Spring..... Fig. 2 - 120
Front Axle Torsion Bar ..... Fig. 2 - 130
Front Axle Torsion Bar ..... Fig. 2 - 140
Front Axle Support ..... Fig. 2 - 150
Steering Knuckle & Control Arm ..... Fig. 2 - 160
Steering Knuckle & Control Arm ..... Fig. 2 - 170

002-100 Front Suspension 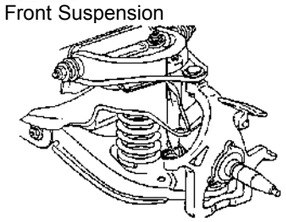			

Front Suspension Leaf Spring
Figure 2-110

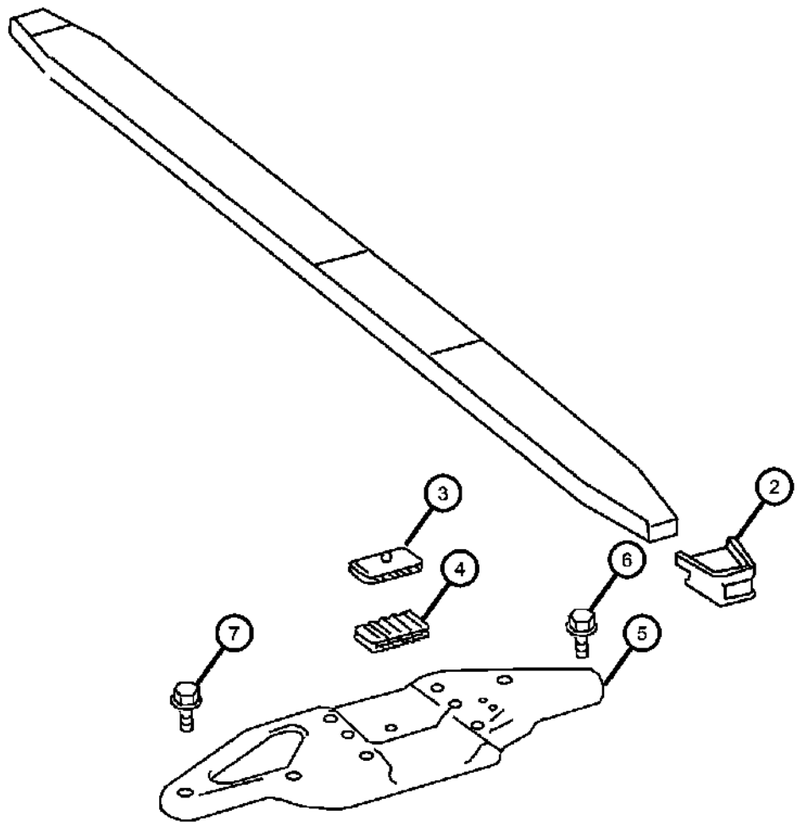

ITEM	PART NUMBER	QTY	LINE	SERIES	BODY	ENGINE	TRANS	TRIM	DESCRIPTION
NOTE:									
Sales Codes:									
-1	68012186AA	1	2, 3, 6, 7	L					SPRING, Front Leaf
2	68012188AA	2	2, 3, 6, 7	L					SEAT, SpringOutside
3	68012189AA	2	2, 3, 6, 7	L					SEAT, SpringTop
4	68012190AA	2	2, 3, 6, 7	L					SEAT, SpringLower
5									PLATE, Suspension
	68012192AA	1	2, 3, 6, 7	L					Right
	68012193AA	1	2, 3, 6, 7	L					Left
6									BOLT
	05136546AA	14	2, 3, 6, 7	L	55, 13, 15, 17, 53				Plate To Body Support [M8 x 25MM]
		14	3, 7	L	03, 05				Plate To Body Support [M8 x 25MM]
7	68007013AA	6	2, 3, 6, 7	L					SCREW, Plate To Body [M12x1.5x40-12.9MM]

SPRINTER (VB)

SERIES	LINE	BODY	ENGINE	TRANSMISSION
L = LOWLINE	3 = HD DODGE 2WD 2 = Med. Duty DODGE 2WD	03 = CAB CHASSIS WHEEL BASE 3 05 = CAB CHASSIS WHEEL BASE 5 13 = 119 WB 53 = 119 WB 15 = VAN WHEEL BASE 5 55 = WAGON WHEEL BASE 5 17 = VAN WHEEL BASE 7	EG2 = 3.5L V6 Gas Engine EXM = 3.0L V6 Turbo Diesel Engine	DGZ = 5-Speed Auto W5A380 Transmission

Front Suspension Leaf Spring
Figure 2-120

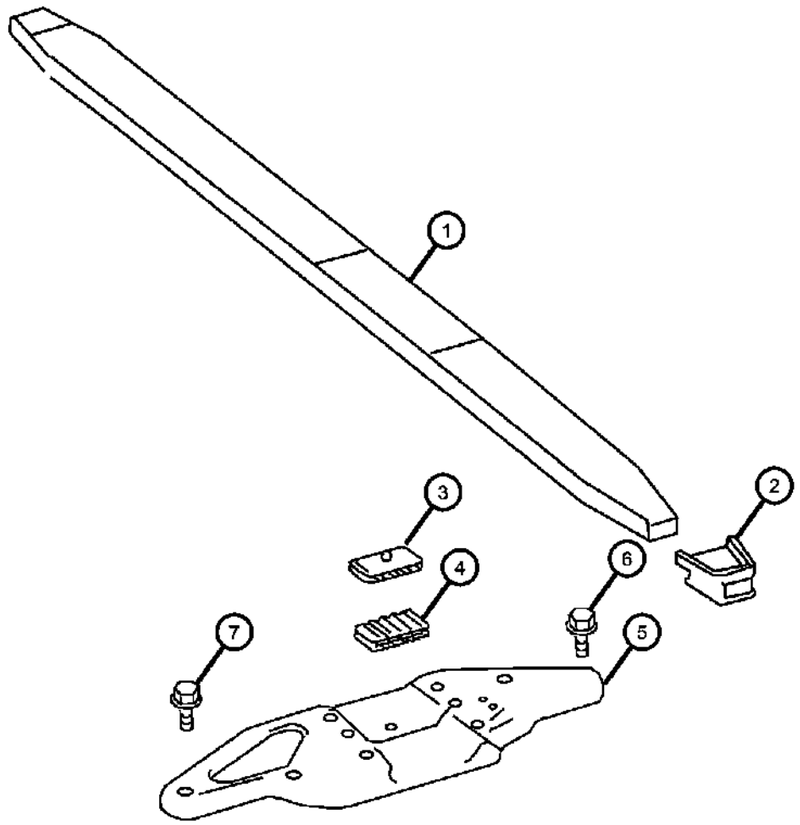

ITEM	PART NUMBER	QTY	LINE	SERIES	BODY	ENGINE	TRANS	TRIM	DESCRIPTION
NOTE: Sales Codes: [DKH]=Reinforced Front Axle [SHK]=Camper Body Stabilizer									
1									SPRING, Front Leaf
	68012186AA	1	7, 2, 3, 6	L					
	68012187AA	1	3, 7	L					With [DKH] And Or [SHK]
2	68012188AA	2	2, 3, 6, 7	L					SEAT, SpringOutside
3	68012189AA	2	2, 3, 6, 7	L					SEAT, SpringTop
4	68012190AA	2	2, 3, 6, 7	L					SEAT, SpringLower
5									PLATE, Suspension
	68012193AA	1	2, 3, 6, 7	L					Left
	68012192AA	1	2, 3, 6, 7	L					Right
6	05136546AA	14	3, 7	L	03, 05				BOLT, Plate To Body Support [M8 x 25MM]
7	68007013AA	6	2, 3, 6, 7	L					SCREW, Plate To Body [M12x1.5x40-12.9MM]

SPRINTER (VB)

SERIES	LINE	BODY	ENGINE	TRANSMISSION
L = LOWLINE	3 = HD DODGE 2WD 2 = Med. Duty DODGE 2WD	03 = CAB CHASSIS WHEEL BASE 3 05 = CAB CHASSIS WHEEL BASE 5 13 = 119 WB 53 = 119 WB 15 = VAN WHEEL BASE 5 55 = WAGON WHEEL BASE 5 17 = VAN WHEEL BASE 7	EG2 = 3.5L V6 Gas Engine EXM = 3.0L V6 Turbo Diesel Engine	DGZ = 5-Speed Auto W5A380 Transmission

Front Axle Torsion Bar
Figure 2-130

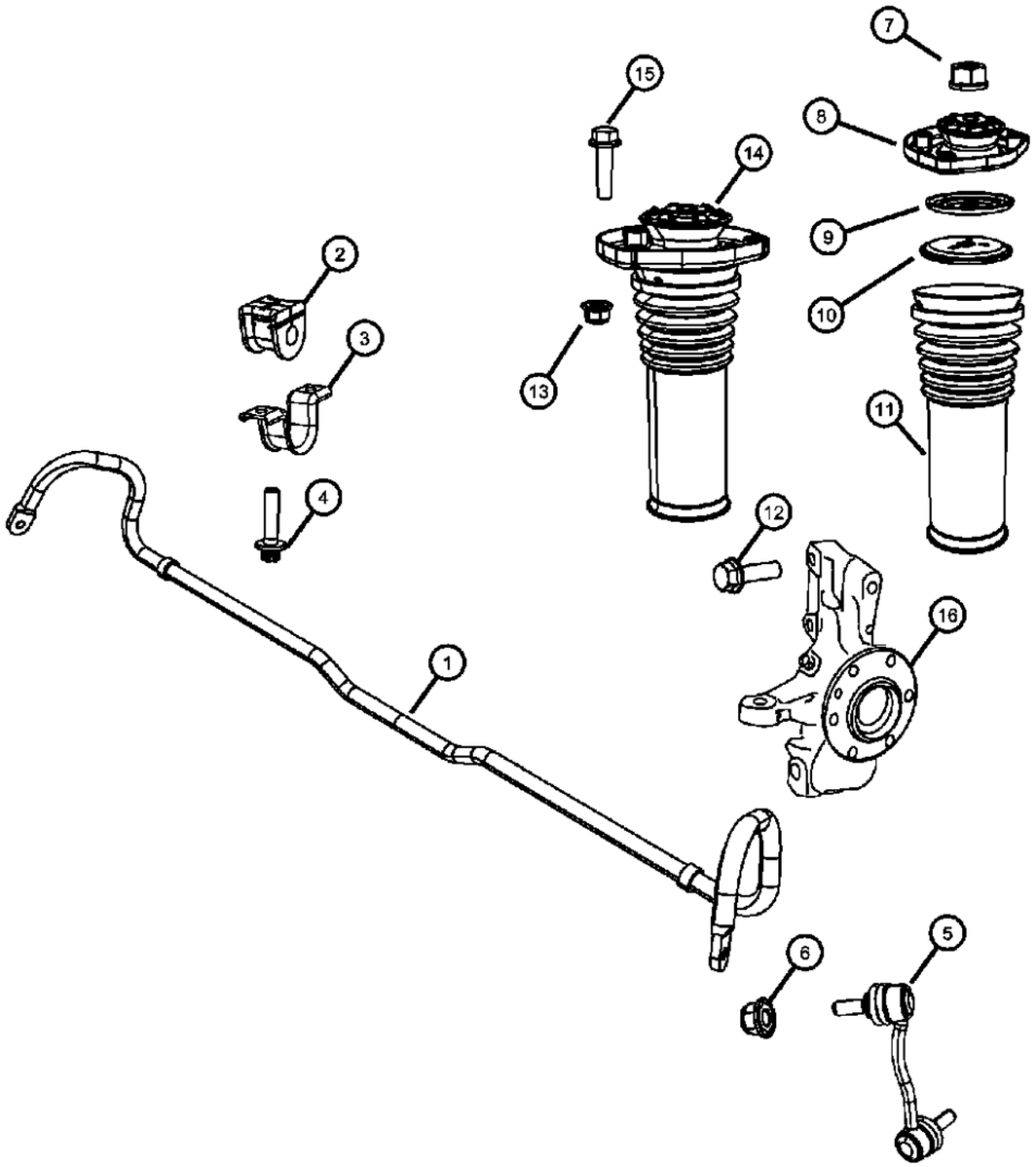

ITEM	PART NUMBER	QTY	LINE	SERIES	BODY	ENGINE	TRANS	TRIM	DESCRIPTION
NOTE: Sales Code: [DKH]=Reinforced Front Axle [SHA]=Front Stabilizer Bar [SHJ]=Front Stabilizer Bar									
1									BAR, Front Sway
	68013715AA	1	2, 3, 6, 7	L					[SHJ]
	68013716AA	1	2, 6	L	17				[SHA]
2									BUSHING
	68013717AA	2	2, 3, 6, 7	L					[SHJ]
	68013718AA	2	2, 3, 6, 7	L					[SHA]
3	68013719AA	2	2, 3, 6, 7	L					RETAINER, Stabilizer Bar Grommet, Torsion Bar
4	06104042AA	4	3, 6, 7, 2	L					SCREW
5									LINK, Stabilizer Bar
	68013720AA	1	2, 3, 6, 7	L					Right
	68013721AA	1	2, 3, 6, 7	L					Left
6	06105171AA	4	2, 3, 6, 7	L	15, 13, 17, 53, 55				NUT, [M12x1.5] Torsion Bar to Rod
7	05125760AA	2	2, 3, 6, 7	L	13, 15, 17, 53, 55				NUT, Hex Flange Lock
8	68013708AA	2	2, 3, 6, 7	L					BUSHING, Shock Absorber
9	68013711AA	2	2, 3, 6, 7	L					BUSHING, Shock AbsorberTop
10	68013710AA	2	2, 3, 6, 7	L					BUSHING, Shock Absorber, Bottom
11	68013709AA	2	2, 3, 6, 7	L					SHIELD, Shock Absorber Dust
12	68013712AA	1	2, 3, 6, 7	L					BOLT, Camber Adjustment
13	06105172AA	1	2, 3, 6, 7	L					NUT, Damper to Steering Knuckle
14									ABSORBER, Shock
	68013697AA	2	2, 3, 6, 7	L					
	68013698AA	2	2, 3, 6, 7	L	17, 53, 55, 13, 15				With [SEA] And Or [SHK]
	68013696AA	2	2, 3, 6, 7	L	13, 15, 17, 53, 55				With [DKH]
15	68017592AA	4	2, 3, 6, 7	L					SCREW, Shock Absorber to Steering Knuckle,Bottom
16									KNUCKLE, Front

SPRINTER (VB)

SERIES	LINE	BODY	ENGINE	TRANSMISSION
L = LOWLINE	3 = HD DODGE 2WD 2 = Med. Duty DODGE 2WD	03 = CAB CHASSIS WHEEL BASE 3 05 = CAB CHASSIS WHEEL BASE 5 13 = 119 WB 53 = 119 WB 15 = VAN WHEEL BASE 5 55 = WAGON WHEEL BASE 5 17 = VAN WHEEL BASE 7	EG2 = 3.5L V6 Gas Engine EXM = 3.0L V6 Turbo Diesel Engine	DGZ = 5-Speed Auto W5A380 Transmission

Front Axle Torsion Bar
Figure 2-130

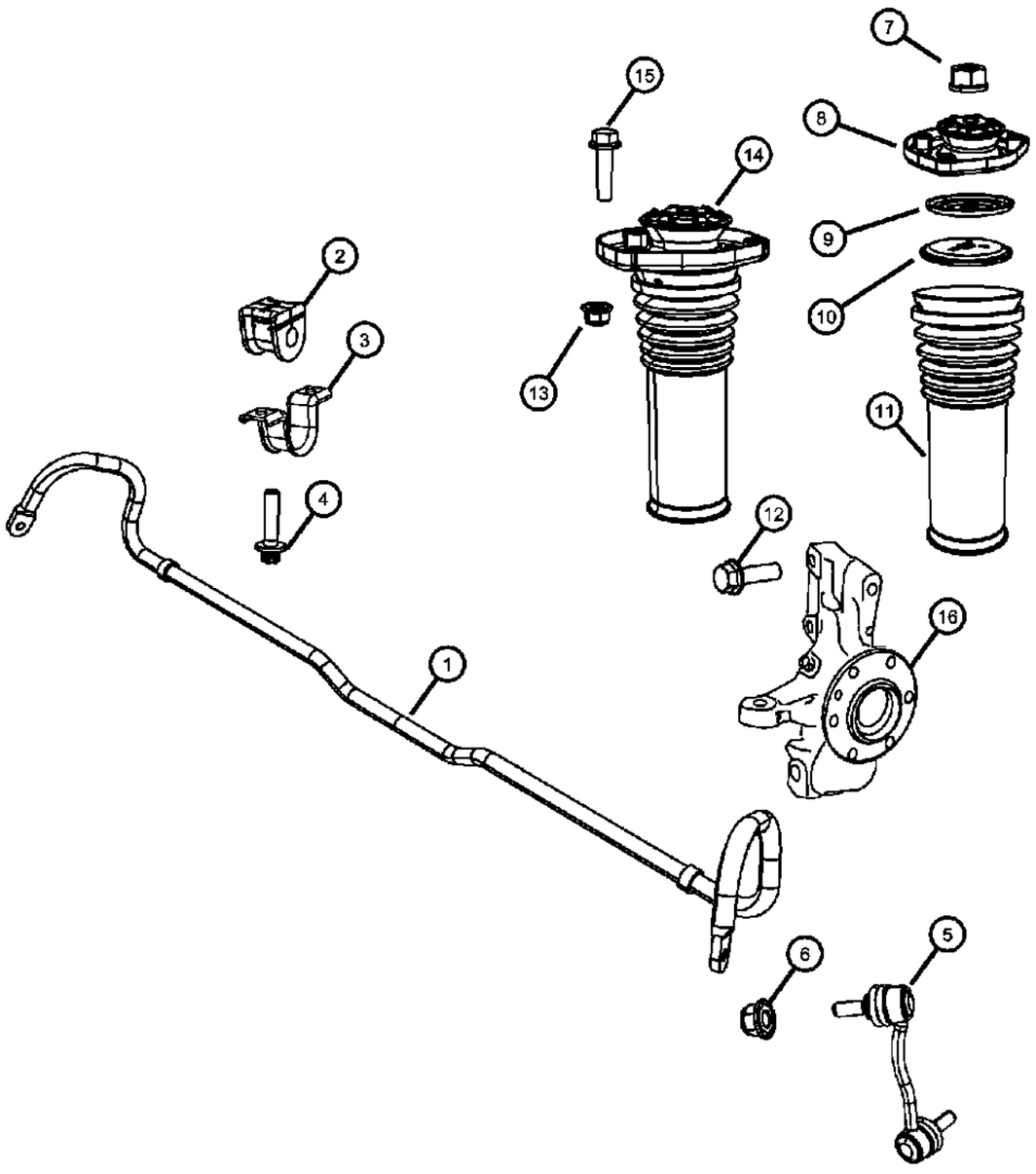

ITEM	PART NUMBER	QTY	LINE	SERIES	BODY	ENGINE	TRANS	TRIM	DESCRIPTION
	68006694AA	1	2, 6	L					Right
	68006695AA	1	2, 6	L					Left

SPRINTER (VB)

SERIES	LINE	BODY	ENGINE	TRANSMISSION
L = LOWLINE	3 = HD DODGE 2WD 2 = Med. Duty DODGE 2WD	03 = CAB CHASSIS WHEEL BASE 3 05 = CAB CHASSIS WHEEL BASE 5 13 = 119 WB 53 = 119 WB 15 = VAN WHEEL BASE 5 55 = WAGON WHEEL BASE 5 17 = VAN WHEEL BASE 7	EG2 = 3.5L V6 Gas Engine EXM = 3.0L V6 Turbo Diesel Engine	DGZ = 5-Speed Auto W5A380 Transmission

Front Axle Torsion Bar
Figure 2-140

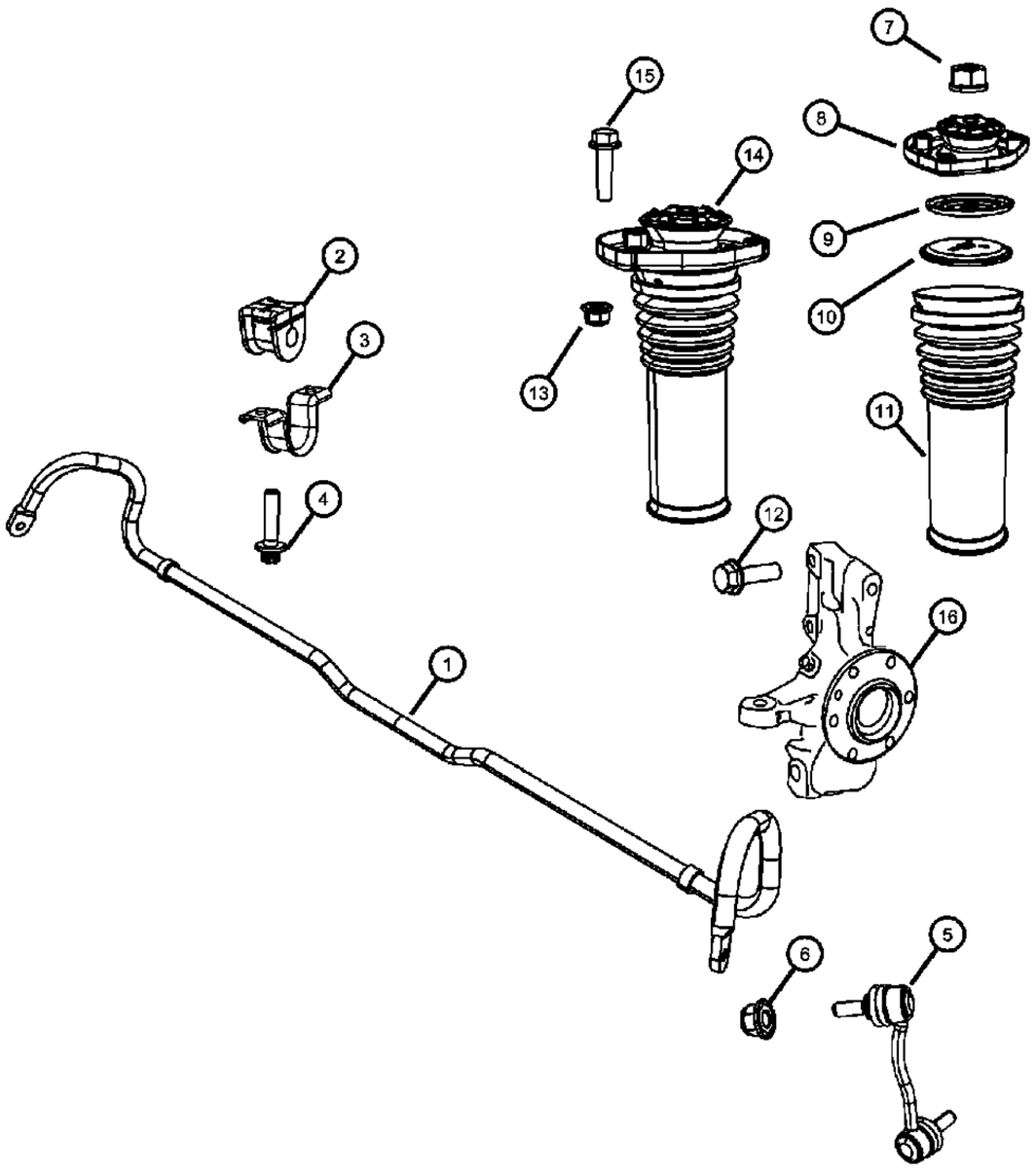

ITEM	PART NUMBER	QTY	LINE	SERIES	BODY	ENGINE	TRANS	TRIM	DESCRIPTION
NOTE:									
Sales Code:									
[DKH]=Reinforced Front Axle									
[SHA]=Front Stabilizer Bar									
[SHJ]=Front Stabilizer Bar									
1									BAR, Front Sway
	68013715AA	1	2, 3, 6, 7	L					With [SHJ]
	68013716AA	1	3, 7	L	03, 05, 13, 15, 17				With [SHA]
2									BUSHING
	68013717AA	2	2, 3, 6, 7	L					With [SHJ]
	68013718AA	2	2, 3, 6, 7	L					With [SHA]
3	68013719AA	2	2, 3, 6, 7	L					RETAINER, Stabilizer Bar Grommet, Torsion Bar
4	06104042AA	4	2, 3, 6, 7	L					SCREW
5									LINK, Stabilizer Bar
	68013721AA	1	2, 3, 6, 7	L					Left
	68013720AA	1	2, 3, 6, 7	L					Right
6	06105171AA	4	3, 7	L	03, 05				NUT
7	05125760AA	2	3, 7	L	03, 05				NUT, Hex Flange Lock
8	68013708AA	2	2, 3, 6, 7	L					BUSHING, Shock Absorber
9	68013711AA	2	2, 3, 6, 7	L					BUSHING, Shock AbsorberTop
10	68013710AA	2	2, 3, 6, 7	L					BUSHING, Shock Absorber, Bottom
11	68013709AA	2	2, 3, 6, 7	L					SHIELD, Shock Absorber Dust
12	68013712AA	1	2, 3, 6, 7	L					BOLT, Camber Adjustment
13	06105172AA	1	2, 3, 6, 7	L					NUT, Damper to Steering Knuckle
14									ABSORBER, Shock
	68013697AA	2	2, 3, 6, 7	L					
	68013698AA	2	2, 3, 6, 7	L	13, 15, 17, 53, 55				With [DKH]
15	68017592AA	4	2, 3, 6, 7	L					SCREW, Shock Absorber to Steering Knuckle,Bottom
16									KNUCKLE, Front
	68006692AA	1	3, 7	L					Right
	68006693AA	1	3, 7	L					Left

SPRINTER (VB)

SERIES	LINE	BODY	ENGINE	TRANSMISSION
L = LOWLINE	3 = HD DODGE 2WD 2 = Med. Duty DODGE 2WD	03 = CAB CHASSIS WHEEL BASE 3 05 = CAB CHASSIS WHEEL BASE 5 13 = 119 WB 53 = 119 WB 15 = VAN WHEEL BASE 5 55 = WAGON WHEEL BASE 5 17 = VAN WHEEL BASE 7	EG2 = 3.5L V6 Gas Engine EXM = 3.0L V6 Turbo Diesel Engine	DGZ = 5-Speed Auto W5A380 Transmission

Front Axle Support
Figure 2-150

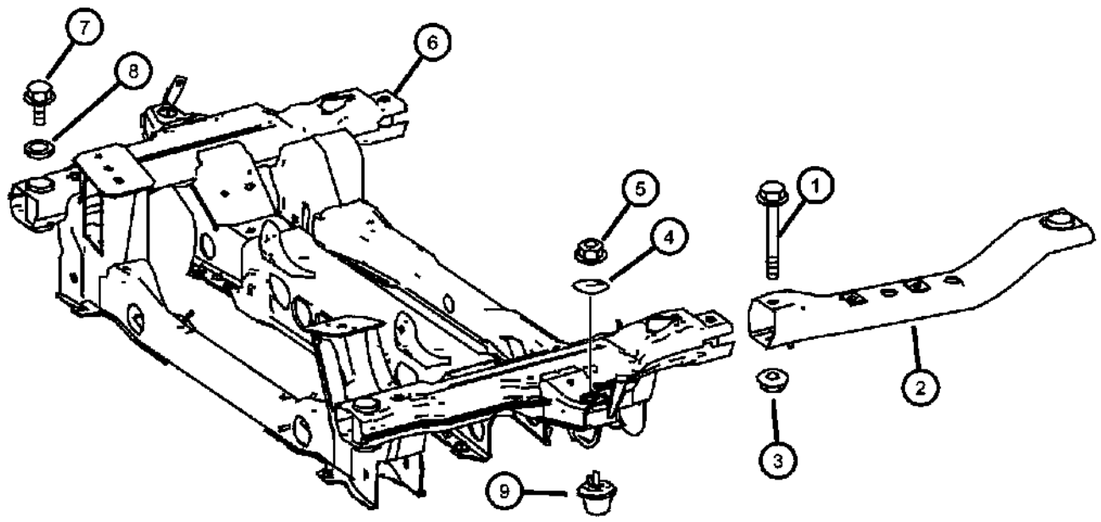

ITEM	PART NUMBER	QTY	LINE	SERIES	BODY	ENGINE	TRANS	TRIM	DESCRIPTION
NOTE:									
Sales Code:									
1									SCREW
	06104265AA	2	3, 7	L	03, 05				[M14x1.5x90]
		2	2, 3, 6, 7	L	13, 15, 17, 53, 55				[M14x1.5x90]
2	68013725AA	2	2, 3, 6, 7	L					RAIL, Frame Front, Alongside
3									NUT
	06105172AA	2	2, 3, 6, 7	L	13, 15, 17, 53, 55				[M14x1.5]
		2	3, 7	L					[M14x1.5]
4	68012162AA	2	2, 6	L					WASHER
5	06105169AA	2	2, 3, 6, 7	L					NUT
6									CRADLE, Front Suspension
	68012158AA	1	2, 6	L					
	68012159AA	1	3, 7	L					
7									BOLT
	68013728AA	2	2, 3, 6, 7	L					Front
	68013730AA	2	2, 3, 6, 7	L					Center
	68013731AA	2	2, 3, 6, 7	L					Rear
8	68013729AA	2	2, 3, 6, 7	L					WASHER
9	68012161AA	2	7, 2, 3, 6	L					BUMPER, Suspension Jounce

SPRINTER (VB)

SERIES	LINE	BODY	ENGINE	TRANSMISSION
L = LOWLINE	3 = HD DODGE 2WD 2 = Med. Duty DODGE 2WD	03 = CAB CHASSIS WHEEL BASE 3 05 = CAB CHASSIS WHEEL BASE 5 13 = 119 WB 53 = 119 WB 15 = VAN WHEEL BASE 5 55 = WAGON WHEEL BASE 5 17 = VAN WHEEL BASE 7	EG2 = 3.5L V6 Gas Engine EXM = 3.0L V6 Turbo Diesel Engine	DGZ = 5-Speed Auto W5A380 Transmission

Steering Knuckle & Control Arm
Figure 2-160

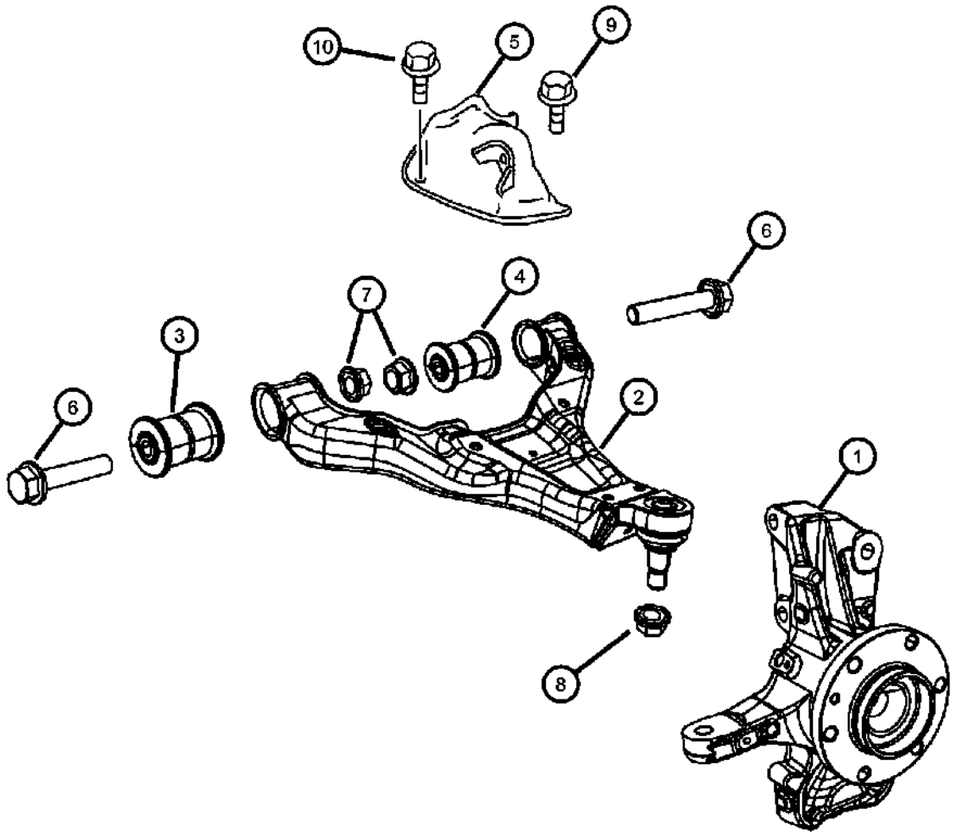

ITEM	PART NUMBER	QTY	LINE	SERIES	BODY	ENGINE	TRANS	TRIM	DESCRIPTION
Note:Knuckle Includes: Hub, Wheel Bearing, & Knuckle. Hub & Wheel Bearing Are Not Serviced.									
Sales Codes:									
1									KNUCKLE, Front, See Note:
	68006692AA	1	3, 7	L					Right
	68006693AA	1	3, 7	L					Left
	68006694AA	1	2, 6	L					Right
	68006695AA	1	2, 6	L					Left
2									ARM, Control
	68012164AA	1	2, 3, 6, 7	L					Right
	68012165AA	1	2, 3, 6, 7	L					Left
3	68012169AA	1	2, 3, 6, 7	L					BUSHING, Control ArmFront, Right & Left
4	68012176AA	1	2, 3, 6, 7	L					BUSHING, Control ArmRear, Right & Left
5									PANEL, Front Wheelhouse
	68012179AA	1	3, 6, 7, 2	L					Up Travel Stop Plate, Left
	68012178AA	1	2, 3, 6, 7	L					Up Travel Stop Plate, Right
6	68012157AA	4	2, 3, 6, 7	L					BOLT, Hex Head, Control Arm Support
7									NUT
	06105172AA	4	3, 7	L	03, 05				Control Arm To Support [M14 x 1.5MM]
		4	2, 3, 6, 7	L	13, 15, 17, 53, 55				Control Arm To Support [M14 x 1.5MM]
8									NUT, Ball Joint
	05136123AA	2	2, 3, 6, 7	L	13, 15, 17, 53, 55				Lower Ball Joint To Steering Knuckle
		2	3, 7	L	03, 05				Lower Ball Joint To Steering Knuckle
9	05133865AA	4	2, 3, 6, 7	L					SCREW, Plate To Transverse Control Arm [M10x35]
10									SCREW, Hex Flange Head
	68012177AA	4	2, 3, 6, 7	L	13, 15, 17, 53, 55				Plate To Transverse Control Arm [M12x1.5x60]
		4	3, 7	L	03, 05				Plate To Transverse Control Arm [M12x1.5x60]

SPRINTER (VB)

SERIES	LINE	BODY	ENGINE	TRANSMISSION
L = LOWLINE	3 = HD DODGE 2WD 2 = Med. Duty DODGE 2WD	03 = CAB CHASSIS WHEEL BASE 3 05 = CAB CHASSIS WHEEL BASE 5 13 = 119 WB 53 = 119 WB 15 = VAN WHEEL BASE 5 55 = WAGON WHEEL BASE 5 17 = VAN WHEEL BASE 7	EG2 = 3.5L V6 Gas Engine EXM = 3.0L V6 Turbo Diesel Engine	DGZ = 5-Speed Auto W5A380 Transmission

Steering Knuckle & Control Arm
Figure 2-170

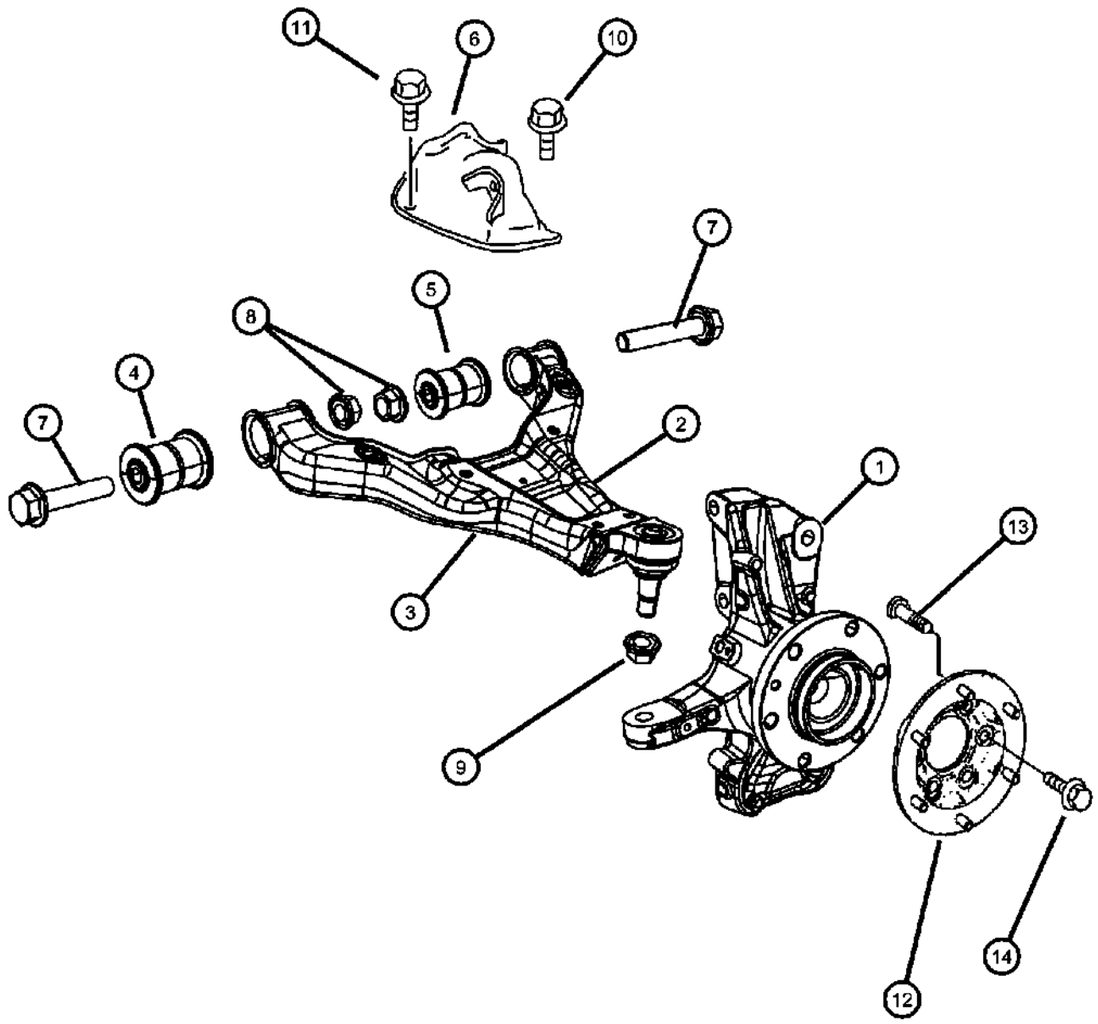

ITEM	PART NUMBER	QTY	LINE	SERIES	BODY	ENGINE	TRANS	TRIM	DESCRIPTION
Note:Knuckle Includes: Hub, Wheel Bearing, & Knuckle. Hub & Wheel Bearing Are Not Serviced.									
Sales Codes:									
1									KNUCKLE, Front, See Note:
	68006692AA	1	3, 7	L					Right
	68006693AA	1	3, 7	L					Left
2									ARM, Lower Control, Front
	68012166AA	1	3, 7	L	03, 05, 13, 15, 17				With [SHK], Right
	68012167AA	1	3, 7	L	03, 05, 13, 15, 17				With [SHK], Left
3									ARM, Control
	68012164AA	1	2, 3, 6, 7	L					Right
	68012165AA	1	2, 3, 6, 7	L					Left
4	68012169AA	1	2, 3, 6, 7	L					BUSHING, Control ArmFront, Right & Left
5	68012176AA	1	2, 3, 6, 7	L					BUSHING, Control ArmRear, Right & Left
6									PANEL, Front Wheelhouse
	68012178AA	1	6, 7, 2, 3	L					Up Travel Stop Plate, Right
	68012179AA	1	2, 3, 6, 7	L					Up Travel Stop Plate, Left
7	68012157AA	4	2, 3, 6, 7	L					BOLT, Hex Head, Control Arm Support
8	06105172AA	1	2, 3, 6, 7	L					NUT, Control Arm To Support [M14 x 1.5MM]
9	05136123AA	1							NUT, Ball Joint, Lower Ball Joint To Steering Knuckle
10	05133865AA	4	2, 3, 6, 7	L					SCREW, Plate To Transverse Control Arm [M10x35]
11	68012177AA	4	3, 7	L	03, 05				SCREW, Hex Flange Head, Plate To Transverse Control Arm [M12x1.5x60]
12									HUB
	68021230AA	2	3, 7	L	03, 05, 13, 15, 17				Wheel Adapter / Up To [10/31/2006]
	68025213AA	2	3, 7	L	03, 05, 13, 15, 17				Wheel Adapter / After [10/31/2006]
13	04862627AA	6	3, 7	L					STUD, Wheel, With [WDK]
14									SCREW, Hex Flange Head

SPRINTER (VB)

SERIES	LINE	BODY	ENGINE	TRANSMISSION
L = LOWLINE	3 = HD DODGE 2WD 2 = Med. Duty DODGE 2WD	03 = CAB CHASSIS WHEEL BASE 3 05 = CAB CHASSIS WHEEL BASE 5 13 = 119 WB 53 = 119 WB 15 = VAN WHEEL BASE 5 55 = WAGON WHEEL BASE 5 17 = VAN WHEEL BASE 7	EG2 = 3.5L V6 Gas Engine EXM = 3.0L V6 Turbo Diesel Engine	DGZ = 5-Speed Auto W5A380 Transmission

Steering Knuckle & Control Arm
Figure 2-170

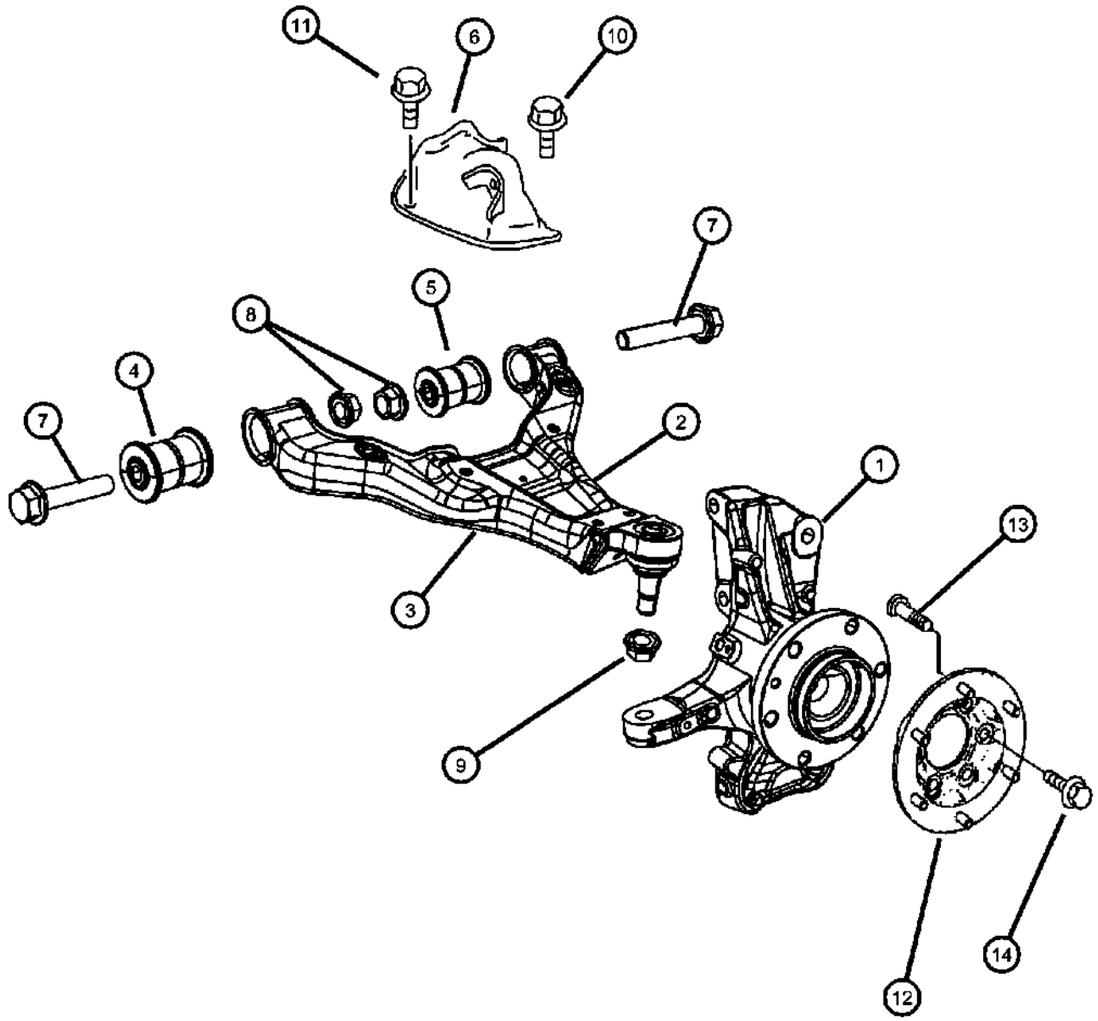

ITEM	PART NUMBER	QTY	LINE	SERIES	BODY	ENGINE	TRANS	TRIM	DESCRIPTION
	06104121AA	2	2, 3, 6, 7	L	13, 15, 17, 53, 55				
		2	3, 7	L	03, 05				

SPRINTER (VB)

SERIES	LINE	BODY	ENGINE	TRANSMISSION
L = LOWLINE	3 = HD DODGE 2WD 2 = Med. Duty DODGE 2WD	03 = CAB CHASSIS WHEEL BASE 3 05 = CAB CHASSIS WHEEL BASE 5 13 = 119 WB 53 = 119 WB 15 = VAN WHEEL BASE 5 55 = WAGON WHEEL BASE 5 17 = VAN WHEEL BASE 7	EG2 = 3.5L V6 Gas Engine EXM = 3.0L V6 Turbo Diesel Engine	DGZ = 5-Speed Auto W5A380 Transmission

Group - 3

Rear Axle

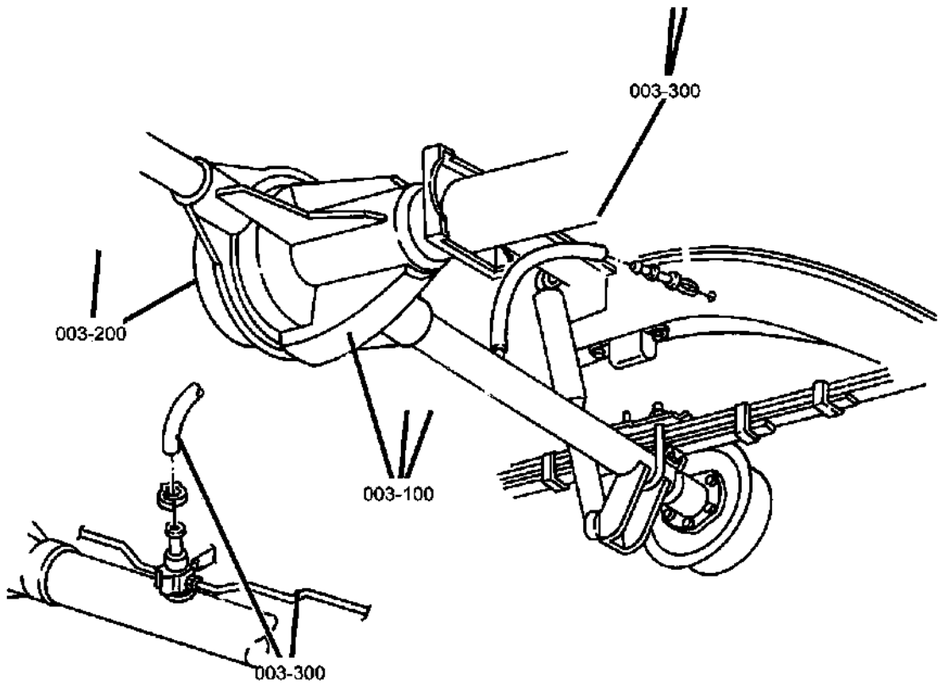

Group - 3 Rear Axle

Illustration Title — Group-Fig. No.

Rear Axle
Rear Axle Assembly ..... Fig. 3 - 110
Rear Axle Assembly ..... Fig. 3 - 120

Differential and Housing
Internal Differential Parts ..... Fig. 3 - 210
Internal Differential Parts ..... Fig. 3 - 220
Dynamic Headlamp Range Control ..... Fig. 3 - 230

Rear Axle Vent
Axle Vent & Differential Cover ..... Fig. 3 - 310

003-100 Rear Axle 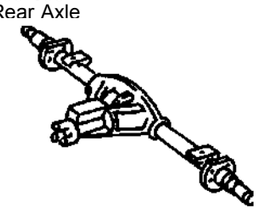	**003-200** Differential and Housing 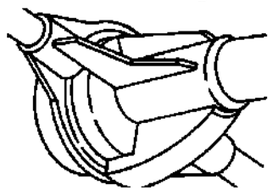	**003-300** Rear Axle Vent 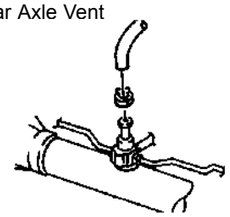	

Rear Axle Assembly
Figure 3-110

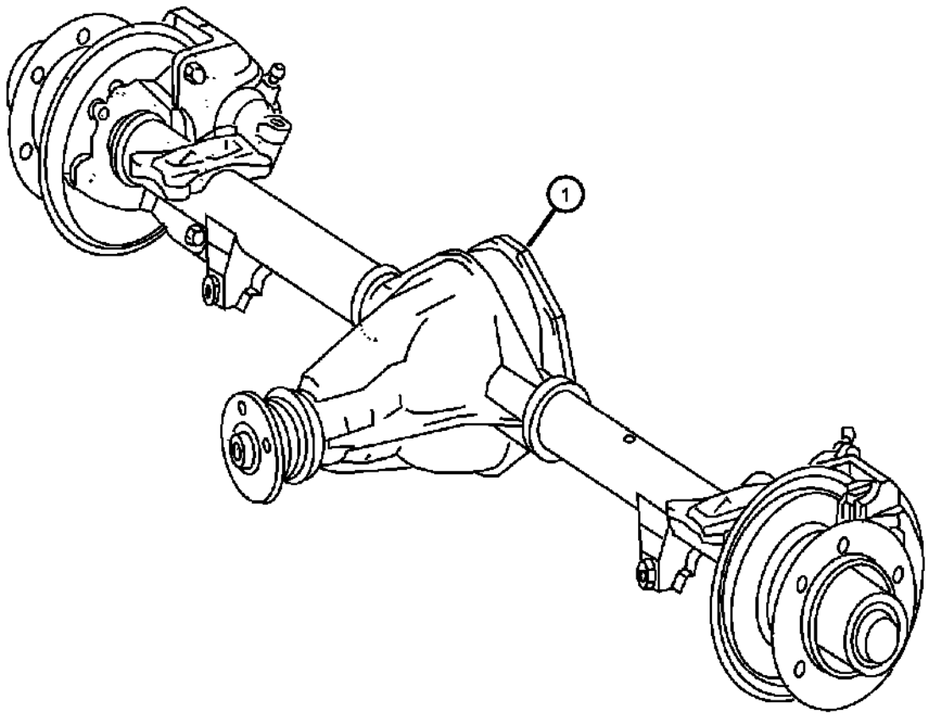

ITEM	PART NUMBER	QTY	LINE	SERIES	BODY	ENGINE	TRANS	TRIM	DESCRIPTION
NOTE:Axle Housing Is Not Serviced. If Axle Housing Is Needed, Complete Service Axle Must Be Ordered.									
Sales Codes:									
[DMF]=4.10 Axle Ratio									
[DMH]=3.92 Axle Ratio									
[DML]=5.10 Axle Ratio									
[DMN]=4.72 Axle Ratio									
1									AXLE, Service Rear, See Note:
	04862645AA	1	2, 6	L	13, 15, 17, 53, 55				With [DMH]
	04862646AA	1	2, 6	L	13, 15, 17, 53, 55				With [DMN]
	04862647AA	1	2, 6	L	53, 55, 13, 15, 17				With [DMF]
	04862648AA	1	2, 6	L	13, 15, 17, 53, 55				With [DML]

SPRINTER (VB)

SERIES	LINE	BODY	ENGINE	TRANSMISSION
L = LOWLINE	3 = HD DODGE 2WD 2 = Med. Duty DODGE 2WD	03 = CAB CHASSIS WHEEL BASE 3 05 = CAB CHASSIS WHEEL BASE 5 13 = 119 WB 53 = 119 WB 15 = VAN WHEEL BASE 5 55 = WAGON WHEEL BASE 5 17 = VAN WHEEL BASE 7	EG2 = 3.5L V6 Gas Engine EXM = 3.0L V6 Turbo Diesel Engine	DGZ = 5-Speed Auto W5A380 Transmission

Rear Axle Assembly
Figure 3-120

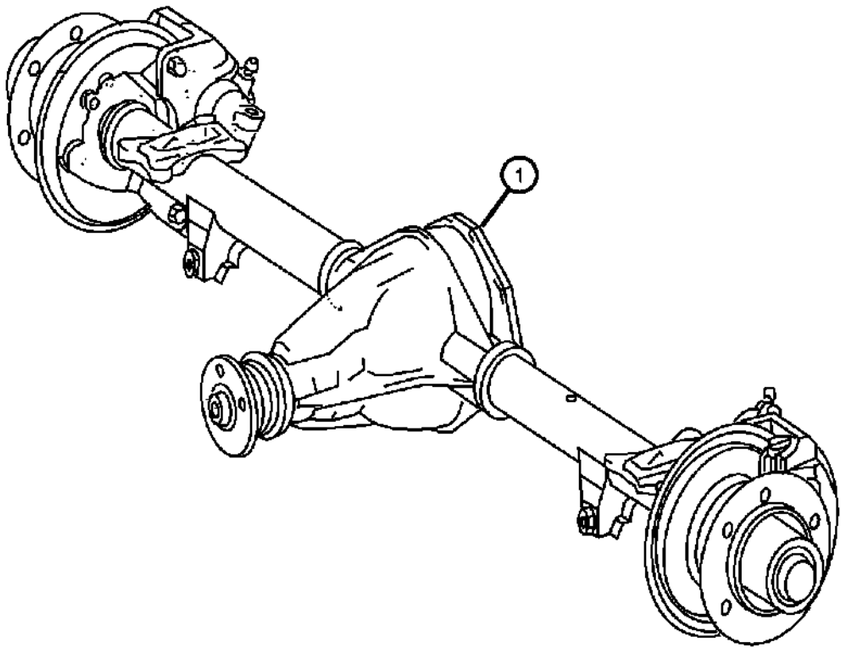

ITEM	PART NUMBER	QTY	LINE	SERIES	BODY	ENGINE	TRANS	TRIM	DESCRIPTION
NOTE:Axle Housing Is Not Serviced. If Axle Housing Is Needed, Complete Service Axle Must Be Ordered. Sales Codes: [DMF]=4.10 Axle Ratio [DMH]=3.92 Axle Ratio [DML]=5.10 Axle Ratio [DMN]=4.72 Axle Ratio									
1									AXLE, Service Rear
	04862649AA	1	3, 7	L	03, 05, 13, 15, 17				With [DMH]
	04862650AA	1	3, 7	L	03, 05, 13, 15, 17				With [DMF]
	04862651AA	1	3	L	05				With [DMN]
	04862652AA	1	3	L	05				With [DML]

SPRINTER (VB)

SERIES	LINE	BODY	ENGINE	TRANSMISSION
L = LOWLINE	3 = HD DODGE 2WD 2 = Med. Duty DODGE 2WD	03 = CAB CHASSIS WHEEL BASE 3 05 = CAB CHASSIS WHEEL BASE 5 13 = 119 WB 53 = 119 WB 15 = VAN WHEEL BASE 5 55 = WAGON WHEEL BASE 5 17 = VAN WHEEL BASE 7	EG2 = 3.5L V6 Gas Engine EXM = 3.0L V6 Turbo Diesel Engine	DGZ = 5-Speed Auto W5A380 Transmission

Internal Differential Parts
Figure 3-210

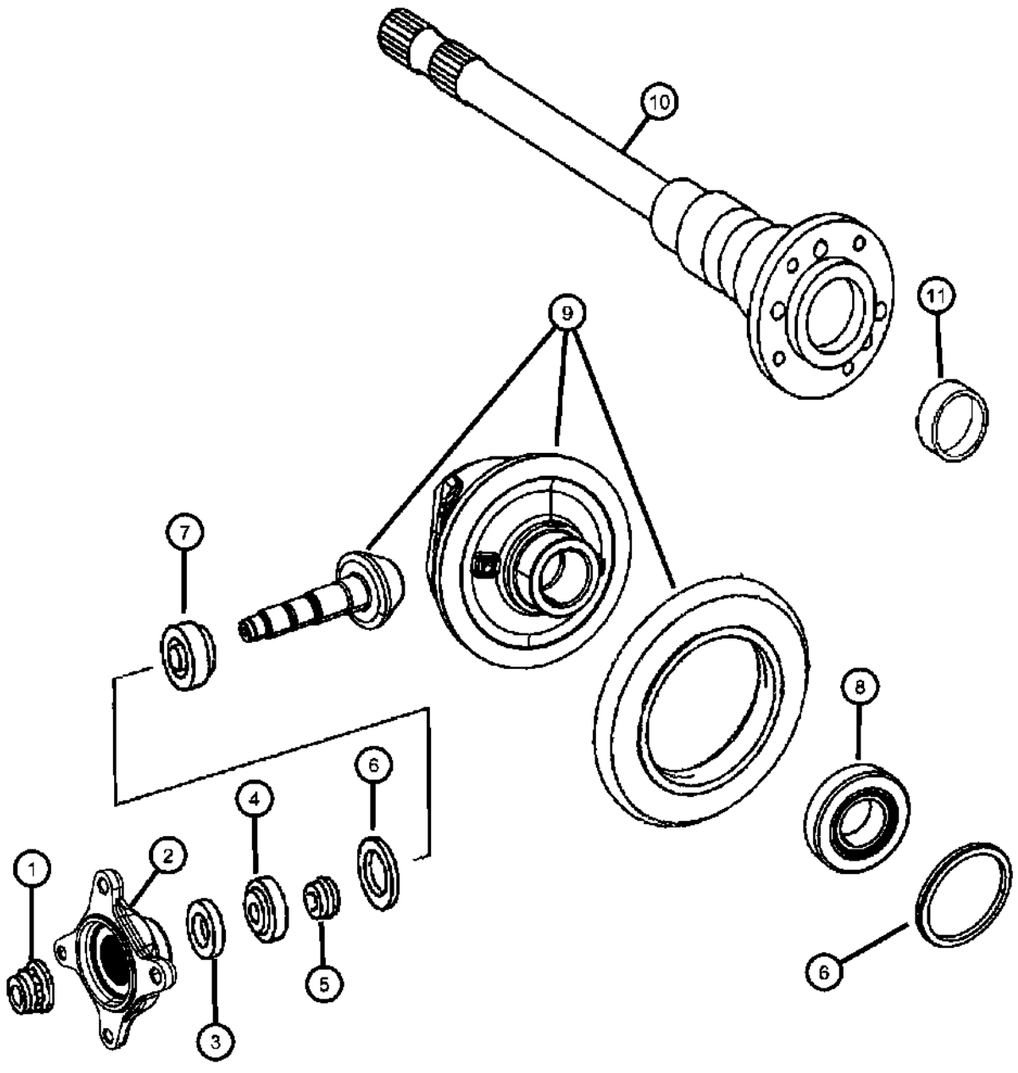

ITEM	PART NUMBER	QTY	LINE	SERIES	BODY	ENGINE	TRANS	TRIM	DESCRIPTION
NOTE:Housing, Ring & Pinion, Shims, Washers & Gears, Are Only Service In The Ring & Pinion Differential Assembly / Callout [#9] Sales Code: [DMF]=4.10 Axle Ratio [DMH]=3.92 Axle Ratio [DML]=5.10 Axle Ratio [DMN]=4.72 Axle Ratio									
1	68018934AA	1	2, 6	L	13, 15, 17, 53, 55				NUT, Pinion Yoke, With Special Version Code [35-504232 / 06 / 07 / 09 / 10]
2	68018931AA	1	2, 6	L	13, 15, 17, 53, 55				FLANGE, Center Differential, With Special Version Code [35-504232 / 06 / 07 / 09 / 10]
3	68019031AA	1	2, 6	L	13, 15, 17, 53, 55				SEAL, Differential Bearing, With Special Version Code [35-504232 / 06 / 07 / 09 / 10]
4									BEARING, Pinion Outer
	68018980AA	1	2, 6	L	13, 15, 17, 53, 55				Drive Pinion Front / With Special Version Code [35-504232 / 06 / 07 / 09 / 10] Interchangeable With [68018981AA], Outer
	68018981AA	1	2, 6	L	13, 15, 17, 53, 55				Drive Pinion Front / With Special Version Code [35-504232 / 06 / 07 / 09 / 10] Interchangeable With [68018980AA], Outer
5	68019018AA	1	2, 6	L	13, 15, 17, 53, 55				SPACER, With Special Version Code [35-504232 / 06 / 07 / 09 / 10]
6									WASHER, Differential
	68018935AA	3	2, 6	L	13, 15, 17, 53, 55				[4.90MM] With Special Version Code [35-504232 / 06 / 07 / 09 / 10]
	68018936AA	3	2, 6	L	13, 15, 17, 53, 55				[5.00MM] With Special Version Code [35-504232 / 06 / 07 / 09 / 10]
	68018938AA	3	2, 6	L	13, 15, 17, 53, 55				[5.10MM] With Special Version Code [35-504232 / 06 / 07 / 09 / 10]
	68018940AA	3	2, 6	L	13, 15, 17, 53, 55				[5.20MM] With Special Version Code [35-504232 / 06 / 07 / 09 / 10]
	68018948AA	3	2, 6	L	13, 15, 17, 53, 55				[5.30MM] With Special Version Code [35-504232 / 06 / 07 / 09 / 10]

SPRINTER (VB)

SERIES	LINE	BODY	ENGINE	TRANSMISSION
L = LOWLINE	3 = HD DODGE 2WD 2 = Med. Duty DODGE 2WD	03 = CAB CHASSIS WHEEL BASE 3 05 = CAB CHASSIS WHEEL BASE 5 13 = 119 WB 53 = 119 WB 15 = VAN WHEEL BASE 5 55 = WAGON WHEEL BASE 5 17 = VAN WHEEL BASE 7	EG2 = 3.5L V6 Gas Engine EXM = 3.0L V6 Turbo Diesel Engine	DGZ = 5-Speed Auto W5A380 Transmission

Internal Differential Parts
Figure 3-210

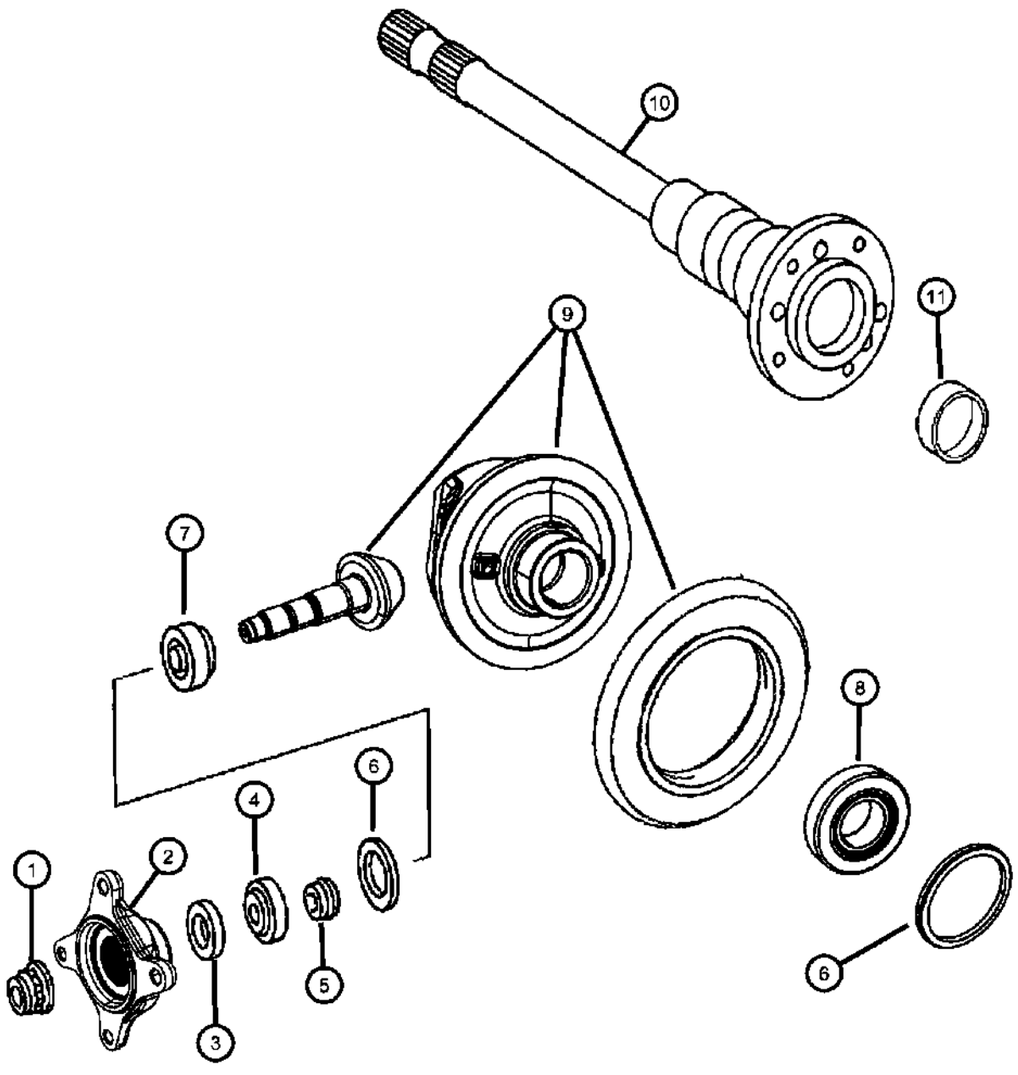

ITEM	PART NUMBER	QTY	LINE	SERIES	BODY	ENGINE	TRANS	TRIM	DESCRIPTION
	68018949AA	3	2, 6	L	13, 15, 17, 53, 55				[5.40MM] With Special Version Code [35-504232 / 06 / 07 / 09 / 10]
	68018961AA	3	2, 6	L	13, 15, 17, 53, 55				[5.50MM] With Special Version Code [35-504232 / 06 / 07 / 09 / 10]
	68018962AA	3	2, 6	L	13, 15, 17, 53, 55				[5.60MM] With Special Version Code [35-504232 / 06 / 07 / 09 / 10]
	68018963AA	3	2, 6	L	13, 15, 17, 53, 55				[5.70MM] With Special Version Code [35-504232 / 06 / 07 / 09 / 10]
	68018964AA	3	2, 6	L	13, 15, 17, 53, 55				[5.80MM] With Special Version Code [35-504232 / 06 / 07 / 09 / 10]
	68018965AA	3	2, 6	L	13, 15, 17, 53, 55				[5.90MM] With Special Version Code [35-504232 / 06 / 07 / 09 / 10]
	68018966AA	3	2, 6	L	13, 15, 17, 53, 55				[6.00MM] With Special Version Code [35-504232 / 06 / 07 / 09 / 10]
	68018969AA	3	2, 6	L	13, 15, 17, 53, 55				[6.10MM] With Special Version Code [35-504232 / 06 / 07 / 09 / 10]
	68018971AA	3	2, 6	L	13, 15, 17, 53, 55				[6.20MM] With Special Version Code [35-504232 / 06 / 07 / 09 / 10]
	68018972AA	3	2, 6	L	13, 15, 17, 53, 55				[6.30MM] With Special Version Code [35-504232 / 06 / 07 / 09 / 10]
	68018974AA	3	2, 6	L	13, 15, 17, 53, 55				[6.38MM] With Special Version Code [35-504232 / 06 / 07 / 09 / 10]
7									BEARING, Pinion Inner
	68018997AA	1	2, 6	L	13, 15, 17, 53, 55				Interchangeable With [68018998AA] / With Special Version Code [35-504232 / 06 / 07 / 09 / 10], Inner
	68018998AA	1	2, 6	L	13, 15, 17, 53, 55				Interchangeable With [68018997AA] / With Special Version Code [35-504232 / 06 / 07 / 09 / 10], Inner
8									BEARING, Axle

SPRINTER (VB)

SERIES	LINE	BODY	ENGINE	TRANSMISSION
L = LOWLINE	3 = HD DODGE 2WD 2 = Med. Duty DODGE 2WD	03 = CAB CHASSIS WHEEL BASE 3 05 = CAB CHASSIS WHEEL BASE 5 13 = 119 WB 53 = 119 WB 15 = VAN WHEEL BASE 5 55 = WAGON WHEEL BASE 5 17 = VAN WHEEL BASE 7	EG2 = 3.5L V6 Gas Engine EXM = 3.0L V6 Turbo Diesel Engine	DGZ = 5-Speed Auto W5A380 Transmission

Internal Differential Parts
Figure 3-210

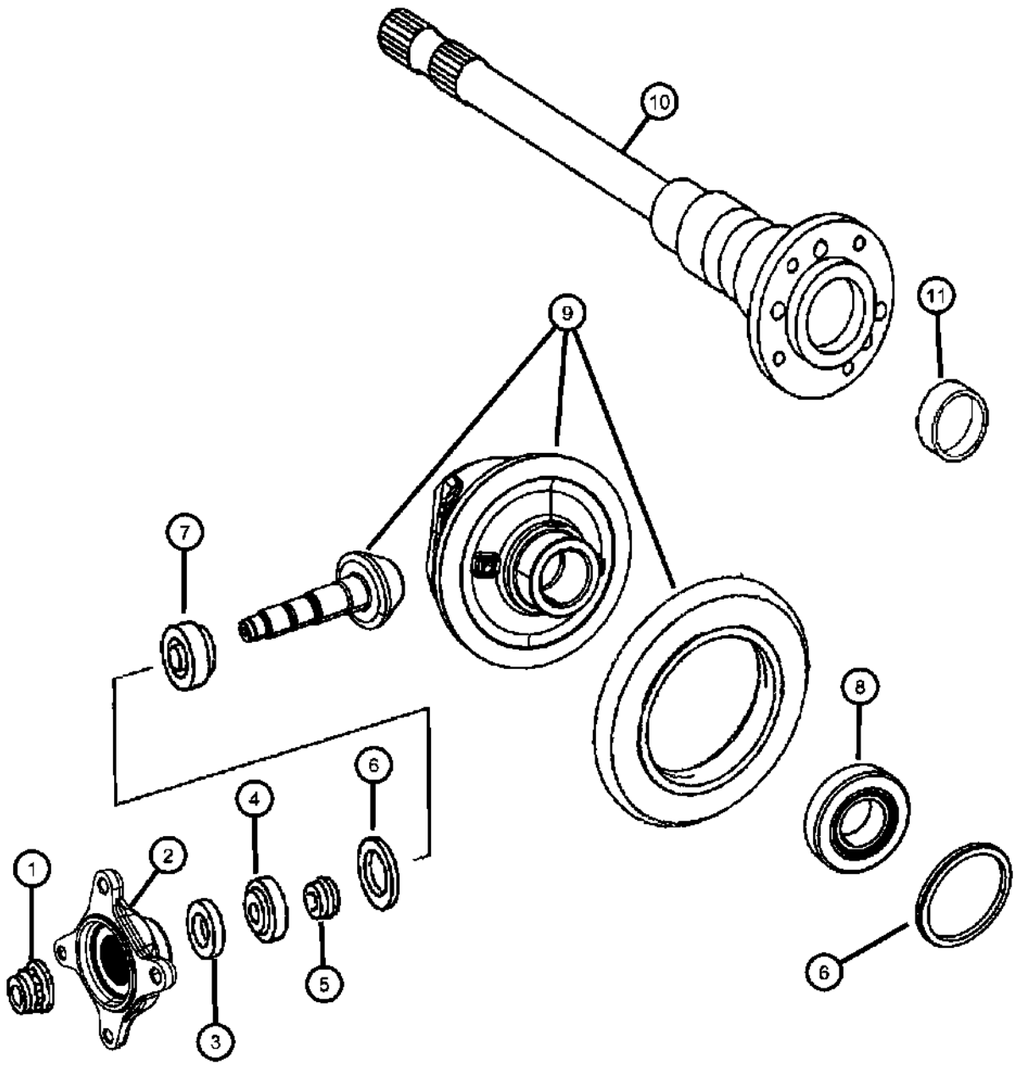

ITEM	PART NUMBER	QTY	LINE	SERIES	BODY	ENGINE	TRANS	TRIM	DESCRIPTION
	68019036AA	2	2, 6	L	13, 15, 17, 53, 55				With Special Version [35-504232 / 06 / 07 / 09 / 10] / Interchangeable With [68019039AA]
	68019039AA	2	2, 6	L	13, 15, 17, 53, 55				With Special Version [35-504232 / 06 / 07 / 09 / 10] / Interchangeable With [68019036AA]
9									DIFFERENTIAL, Rear Axle
	68019064AA	1	2, 6	L	13, 15, 17, 53, 55				With [DML] / With Special Version Code [35-504232 / 06] / See Note
	68019072AA	1	2, 6	L	13, 15, 17, 53, 55				With [DMN] / With Special Version Code [35-504232 / 07] / See Note
	68019086AA	1	2, 6	L	13, 15, 17, 53, 55				With [DMF] / With Special Version Code [35-504232 / 09] / See Note
	68019087AA	1	2, 6	L	13, 15, 17, 53, 55				With [DMH] / With Special Version Code [35-504232 / 10] / See Note
10									SHAFT, Axle
	68019095AA	1	2, 6	L	13, 15, 17, 53, 55				With Special Version Code [35-504008 / 89], Left
	68019135AA	1	2, 6	L	13, 15, 17, 53, 55				With Special Version Code [35-504008 / 89], Right
11	04862654AA	2	2, 6	L	13, 15, 17, 53, 55				PLUG, Expansion, With Special Version Code [35-504008 / 89]

SPRINTER (VB)

SERIES	LINE	BODY	ENGINE	TRANSMISSION
L = LOWLINE	3 = HD DODGE 2WD 2 = Med. Duty DODGE 2WD	03 = CAB CHASSIS WHEEL BASE 3 05 = CAB CHASSIS WHEEL BASE 5 13 = 119 WB 53 = 119 WB 15 = VAN WHEEL BASE 5 55 = WAGON WHEEL BASE 5 17 = VAN WHEEL BASE 7	EG2 = 3.5L V6 Gas Engine EXM = 3.0L V6 Turbo Diesel Engine	DGZ = 5-Speed Auto W5A380 Transmission

Internal Differential Parts
Figure 3-220

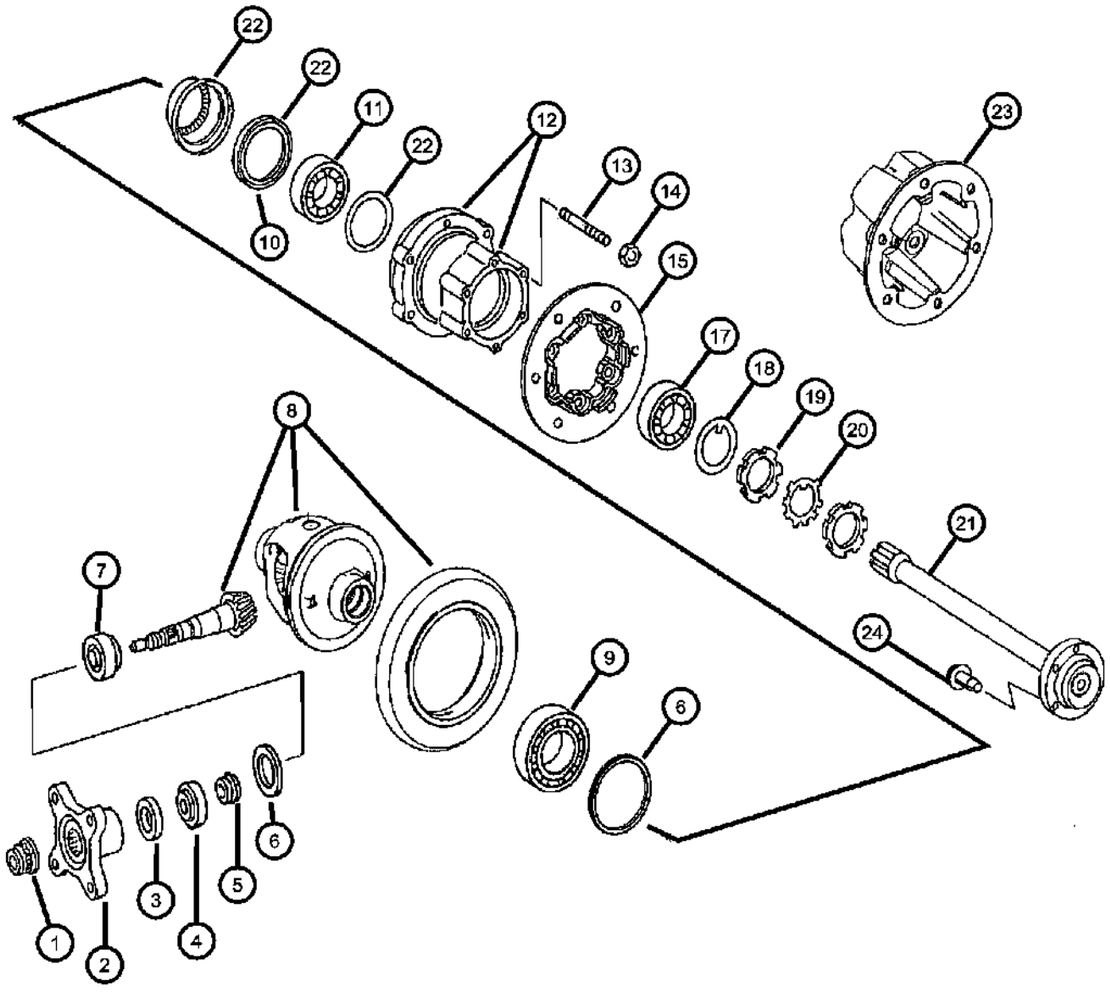

ITEM	PART NUMBER	QTY	LINE	SERIES	BODY	ENGINE	TRANS	TRIM	DESCRIPTION
NOTE:Housing, Ring & Pinion, Shims, Washers & Gears, Are Only Service In The Ring & Pinion Differential Assembly / Callout [#8]									
1	68018934AA	1	3, 7	L	03, 05, 13, 15, 17				NUT, Pinion Yoke, With Special Version Code [35-504232 / 12 / 13 / 15 / 16]
2	68018931AA	1	3, 7	L	03, 05, 13, 15, 17				FLANGE, Center Differential, With Special Version Code [35-504232 / 12 / 13 / 15 / 16]
3	68019031AA	1	3, 7	L	13, 15, 17, 03, 05				SEAL, Differential Bearing, Drive Pinion Seal / With Special Version Code [35-504232 / 12 / 13 / 15 / 16], Front
4									BEARING, Pinion Outer
	68018980AA	1	3, 7	L	03, 05, 13, 15, 17				Drive Pinion Front Bearing / Interchangeable With [68018991AA] / With Special Version Code [35-504232 / 12 / 13 / 15 / 16]
	68018981AA	1	3, 7	L	03, 05, 13, 15, 17				Drive Pinion Front Bearing / Interchangeable With [68018990AA] / With Special Version Code [35-504232 / 12 / 13 / 15 / 16]
5	68019018AA	1	3, 7	L	03, 05, 13, 15, 17				SPACER, With Special Version Code [35-504232 / 12 / 13 / 15 / 16]
6									WASHER, Differential
	68018935AA	3	3, 7	L	03, 05, 13, 15, 17				[4.90MM] Drive Pinion Rear / With Special Version Code [35-504232 / 12 / 13 / 15 / 16]
	68018938AA	3	3, 7	L	03, 05, 13, 15, 17				[5.10MM] Drive Pinion Rear / With Special Version Code [35-504232 / 12 / 13 / 15 / 16]
	68018940AA	3	3, 7	L	03, 05, 13, 15, 17				[5.20MM] Drive Pinion Rear / With Special Version Code [35-504232 / 12 / 13 / 15 / 16]
	68018936AA	3	3, 7	L	03, 05, 13, 15, 17				[5.00MM] Drive Pinion Rear / With Special Version Code [35-504232 / 12 / 13 / 15 / 16]
	68018949AA	3	3, 7	L	03, 05, 13, 15, 17				[5.40MM] Drive Pinion Rear / With Special Version Code [35-504232 / 12 / 13 / 15 / 16]
	68018948AA	3	3, 7	L	03, 05, 13, 15, 17				[5.30MM] Drive Pinion Rear / With Special Version Code [35-504232 / 12 / 13 / 15 / 16]

SPRINTER (VB)

SERIES	LINE	BODY	ENGINE	TRANSMISSION
L = LOWLINE	3 = HD DODGE 2WD 2 = Med. Duty DODGE 2WD	03 = CAB CHASSIS WHEEL BASE 3 05 = CAB CHASSIS WHEEL BASE 5 13 = 119 WB 53 = 119 WB 15 = VAN WHEEL BASE 5 55 = WAGON WHEEL BASE 5 17 = VAN WHEEL BASE 7	EG2 = 3.5L V6 Gas Engine EXM = 3.0L V6 Turbo Diesel Engine	DGZ = 5-Speed Auto W5A380 Transmission

Internal Differential Parts
Figure 3-220

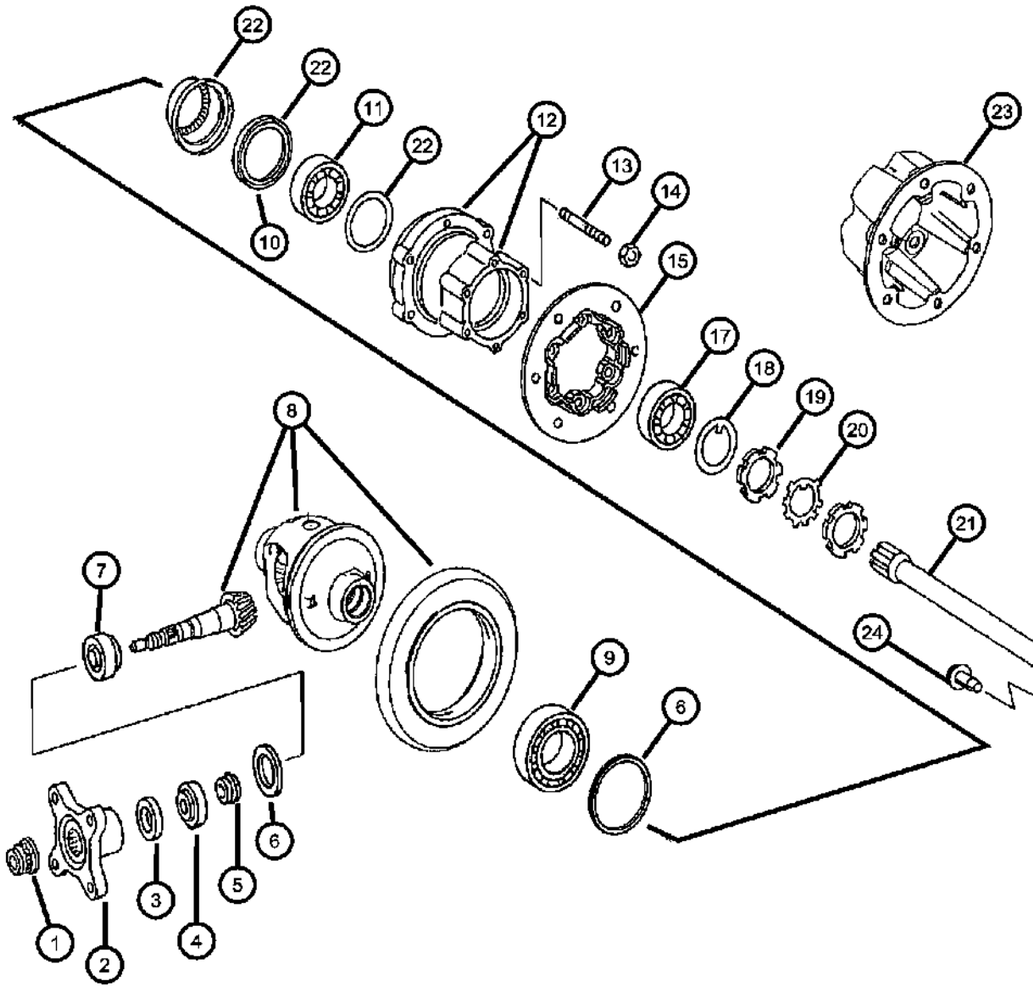

ITEM	PART NUMBER	QTY	LINE	SERIES	BODY	ENGINE	TRANS	TRIM	DESCRIPTION
	68018963AA	3	3, 7	L	03, 05, 13, 15, 17				[5.70MM] Drive Pinion Rear / With Special Version Code [35-504232 / 12 / 13 / 15 / 16]
	68018961AA	3	3, 7	L	03, 05, 13, 15, 17				[5.50MM] Drive Pinion Rear / With Special Version Code [35-504232 / 12 / 13 / 15 / 16]
	68018962AA	3	3, 7	L	15, 17, 03, 05, 13				[5.60MM] Drive Pinion Rear / With Special Version Code [35-504232 / 12 / 13 / 15 / 16]
	68018964AA	3	3, 7	L	03, 05, 13, 15, 17				[5.80MM] Drive Pinion Rear / With Special Version Code [35-504232 / 12 / 13 / 15 / 16]
	68018965AA	3	3, 7	L	17, 03, 05, 13, 15				[5.90MM] Drive Pinion Rear / With Special Version Code [35-504232 / 12 / 13 / 15 / 16]
	68018969AA	3	3, 7	L	03, 05, 13, 15, 17				[6.10MM] Drive Pinion Rear / With Special Version Code [35-504232 / 12 / 13 / 15 / 16]
	68018971AA	3	3, 7	L	03, 05, 13, 15, 17				[6.20MM] Drive Pinion Rear / With Special Version Code [35-504232 / 12 / 13 / 15 / 16]
	68018966AA	3	3, 7	L	03, 05, 13, 15, 17				[6.00MM] Drive Pinion Rear / With Special Version Code [35-504232 / 12 / 13 / 15 / 16]
	68018972AA	3	3, 7	L	03, 05, 13, 15, 17				[6.30MM] Drive Pinion Rear / With Special Version Code [35-504232 / 12 / 13 / 15 / 16]
	68018974AA	3	3, 7	L	03, 05, 13, 15, 17				[6.38MM] Drive Pinion Rear / With Special Version Code [35-504232 / 12 / 13 / 15 / 16]
7									BEARING, Pinion Inner
	68018997AA	1	3, 7	L	03, 05, 13, 15, 17				Drive Pinion Rear /Interchangeable With [68018998AA] / With Special Version Code [35-504232 / 12 / 13 / 16 / 16]
	68018998AA	1	3, 7	L	03, 05, 13, 15, 17				Drive Pinion Rear /Interchangeable With [68018997AA] / With Special Version Code [35-504232 / 12 / 13 / 16 / 16]
8									DIFFERENTIAL, Rear Axle
	68019064AA	1	3, 7	L	03, 05, 13, 15, 17				With [DML] / Special Version Code [35-504232 / 12]

SPRINTER (VB)

SERIES	LINE	BODY	ENGINE	TRANSMISSION
L = LOWLINE	3 = HD DODGE 2WD 2 = Med. Duty DODGE 2WD	03 = CAB CHASSIS WHEEL BASE 3 05 = CAB CHASSIS WHEEL BASE 5 13 = 119 WB 53 = 119 WB 15 = VAN WHEEL BASE 5 55 = WAGON WHEEL BASE 5 17 = VAN WHEEL BASE 7	EG2 = 3.5L V6 Gas Engine EXM = 3.0L V6 Turbo Diesel Engine	DGZ = 5-Speed Auto W5A380 Transmission

Internal Differential Parts
Figure 3-220

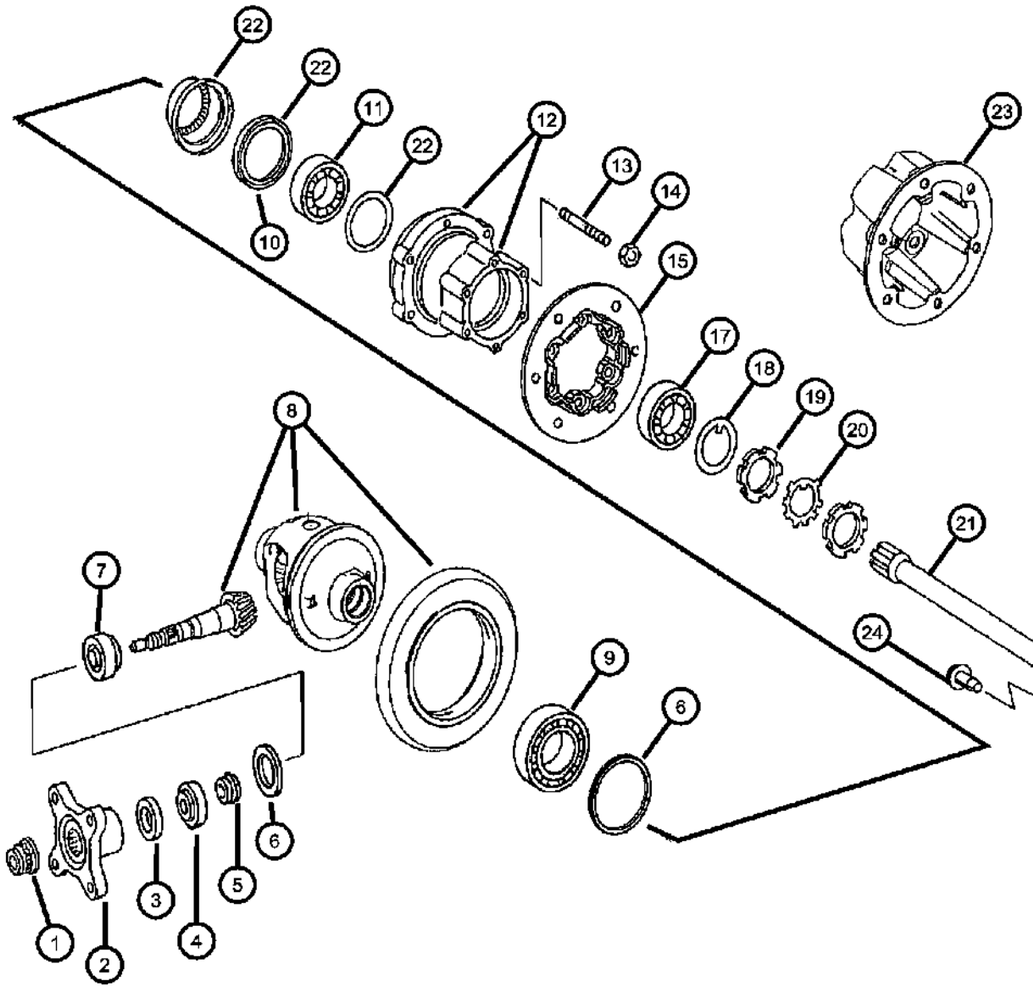

ITEM	PART NUMBER	QTY	LINE	SERIES	BODY	ENGINE	TRANS	TRIM	DESCRIPTION
	68019072AA	1	3, 7	L	03, 05, 13, 15, 17				With [DMN] / Special Version Code [35-504232 / 13]
	68019086AA	1	3, 7	L	03, 05, 13, 15, 17				With [DMF] / Special Version Code [35-504232 / 15]
	68019087AA	1	3, 7	L	03, 05, 13, 15, 17				With [DMH] / Special Version Code [35-504232 / 16]
9									BEARING, Axle
	68019036AA	2	3, 7	L	03, 05, 13, 15, 17				Interchangeable With [68019039AA] / Special Version Code [35-504232 / 12 / 13 / 15 / 16]
	68019039AA	2	3, 7	L	03, 05, 13, 15, 17				Interchangeable With [68019036AA] / Special Version Code [35-504232 / 12 / 13 / 15 / 16]
10	68026074AA	1	3, 7	L	03, 05, 13, 15, 17				SEAL, Axle Shaft, With Special Version Code [35-504019 / 69], Inner
11									BEARING, Tapered Roller
	68026071AA	1	3, 7	L	03, 05, 13, 15, 17				Interchangeable With [68026072AA & 68026073AA] / With Special Version Code [35-504019 / 69]
	68026072AA	1	3, 7	L	03, 05, 13, 15, 17				Interchangeable With [68026071AA & 68026073AA] / With Special Version Code [35-504019 / 69]
	68026073AA	1	3, 7	L	03, 05, 13, 15, 17				Interchangeable With [68026071AA & 68026072AA] / With Special Version Code [35-504019 / 69]
12									HUB, Rear Wheel
	68026067AA	1	3, 7	L	03, 05, 13, 15, 17				Interchangeable With [68026068AA] / With Special Version Code [35-504019 / 69]
	68026068AB	1	3, 7	L	03, 05, 13, 15, 17				Interchangeable With [68026067AA] / With Special Version Code [35-504019 / 69]
13	05134714AA	1	3, 7	L	03, 05, 13, 15, 17				STUD, Hub
14	05134715AA	12	3, 7	L	03, 05, 13, 15, 17				NUT, Hex Lock, With Special Version Code [35-504000 / 04]

SPRINTER (VB)

SERIES	LINE	BODY	ENGINE	TRANSMISSION
L = LOWLINE	3 = HD DODGE 2WD 2 = Med. Duty DODGE 2WD	03 = CAB CHASSIS WHEEL BASE 3 05 = CAB CHASSIS WHEEL BASE 5 13 = 119 WB 53 = 119 WB 15 = VAN WHEEL BASE 5 55 = WAGON WHEEL BASE 5 17 = VAN WHEEL BASE 7	EG2 = 3.5L V6 Gas Engine EXM = 3.0L V6 Turbo Diesel Engine	DGZ = 5-Speed Auto W5A380 Transmission

Internal Differential Parts
Figure 3-220

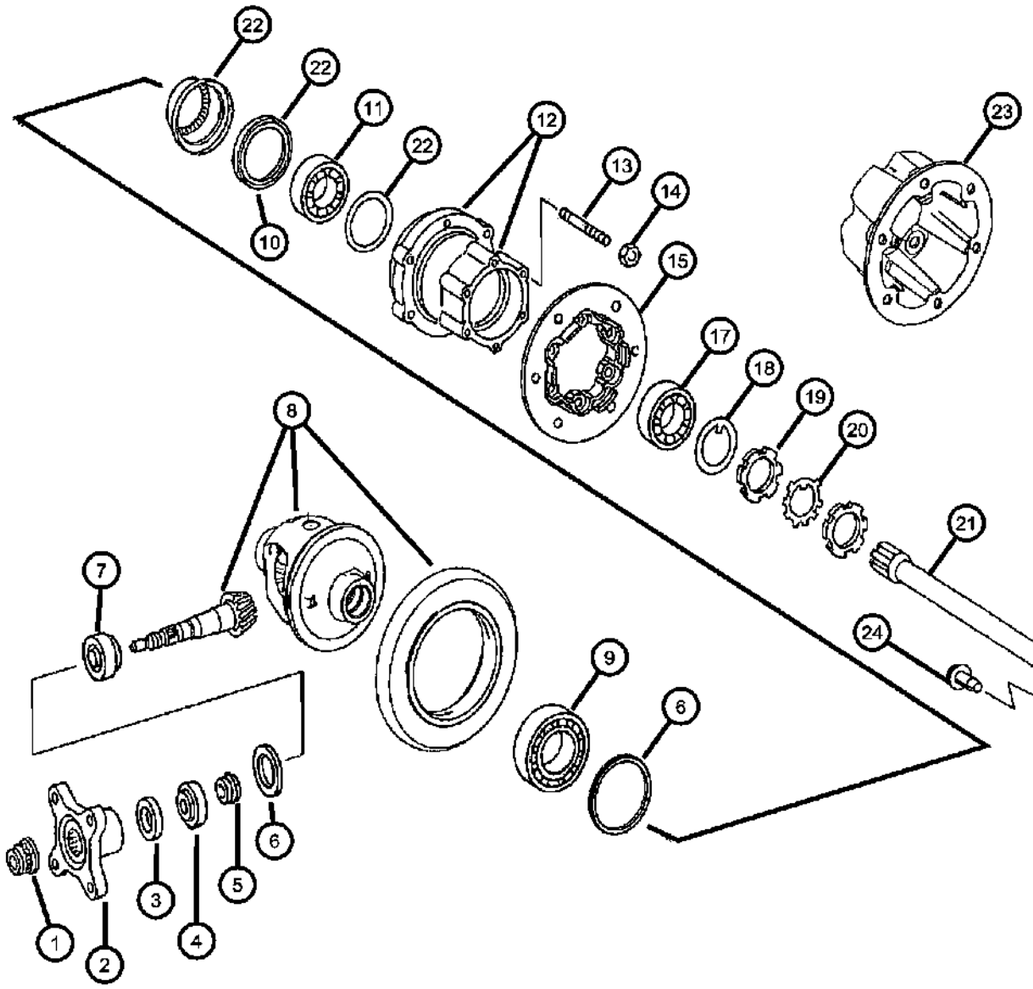

ITEM	PART NUMBER	QTY	LINE	SERIES	BODY	ENGINE	TRANS	TRIM	DESCRIPTION
15	68026053AA	1	3, 7	L	03, 05, 13, 15, 17				FLANGE, Axle Output, With Special Version Code [35-504306 / 09]
-16	04862627AA	6	3, 7	L					STUD, Wheel, Rear Axle Only. Do Not Use On Front Wheel Hubs.
17									BEARING, Tapered Roller
	68026069AA	1	3, 7	L	03, 05, 13, 15, 17				Interchangeable With [68026070AA] / With Special Version Code [35-504019 / 69], Outer
	68026070AA	1	3, 7	L	03, 05, 13, 15, 17				Interchangeable With [68026069AA] / With Special Version Code [35-504019 / 69], Outer
18	68025302AA	2	3, 7	L	03, 05, 13, 15, 17				PLATE, PLATE-LOCK, With Special Version Code [35-504000 / 04]
19	68025301AA	4	3, 7	L	03, 05, 13, 15, 17				NUT, Axle Hub, With Special Version Code [35-504000 / 04]
20	68025297AA	2	3, 7	L	03, 05, 13, 15, 17				WASHER, Axle Hub, With Special Version Code [35-504000 / 04], Outer
21									SHAFT, Axle
	68026047AA	1	3, 7	L	03, 05, 13, 15, 17				With Special Version Code [35-504008 / 90], Left
	68026052AA	1	3, 7	L	03, 05, 13, 15, 17				With Special Version Code [35-504008 / 90], Right
22	04862662AA	2	3, 7	L	03, 05, 13, 15, 17				TONE RING, Sensor, This Includes [Tone Ring, Shaft Seal & Washer] These Parts Must Be Replaced As A Set.
23	68026053AA	1	3, 7	L	03, 05, 13, 15, 17				FLANGE, Axle Output
24	68026054AA	6	3, 7	L	03, 05, 13, 15, 17				BOLT, Hub

SPRINTER (VB)

SERIES	LINE	BODY	ENGINE	TRANSMISSION
L = LOWLINE	3 = HD DODGE 2WD 2 = Med. Duty DODGE 2WD	03 = CAB CHASSIS WHEEL BASE 3 05 = CAB CHASSIS WHEEL BASE 5 13 = 119 WB 53 = 119 WB 15 = VAN WHEEL BASE 5 55 = WAGON WHEEL BASE 5 17 = VAN WHEEL BASE 7	EG2 = 3.5L V6 Gas Engine EXM = 3.0L V6 Turbo Diesel Engine	DGZ = 5-Speed Auto W5A380 Transmission

Dynamic Headlamp Range Control
Figure 3-230

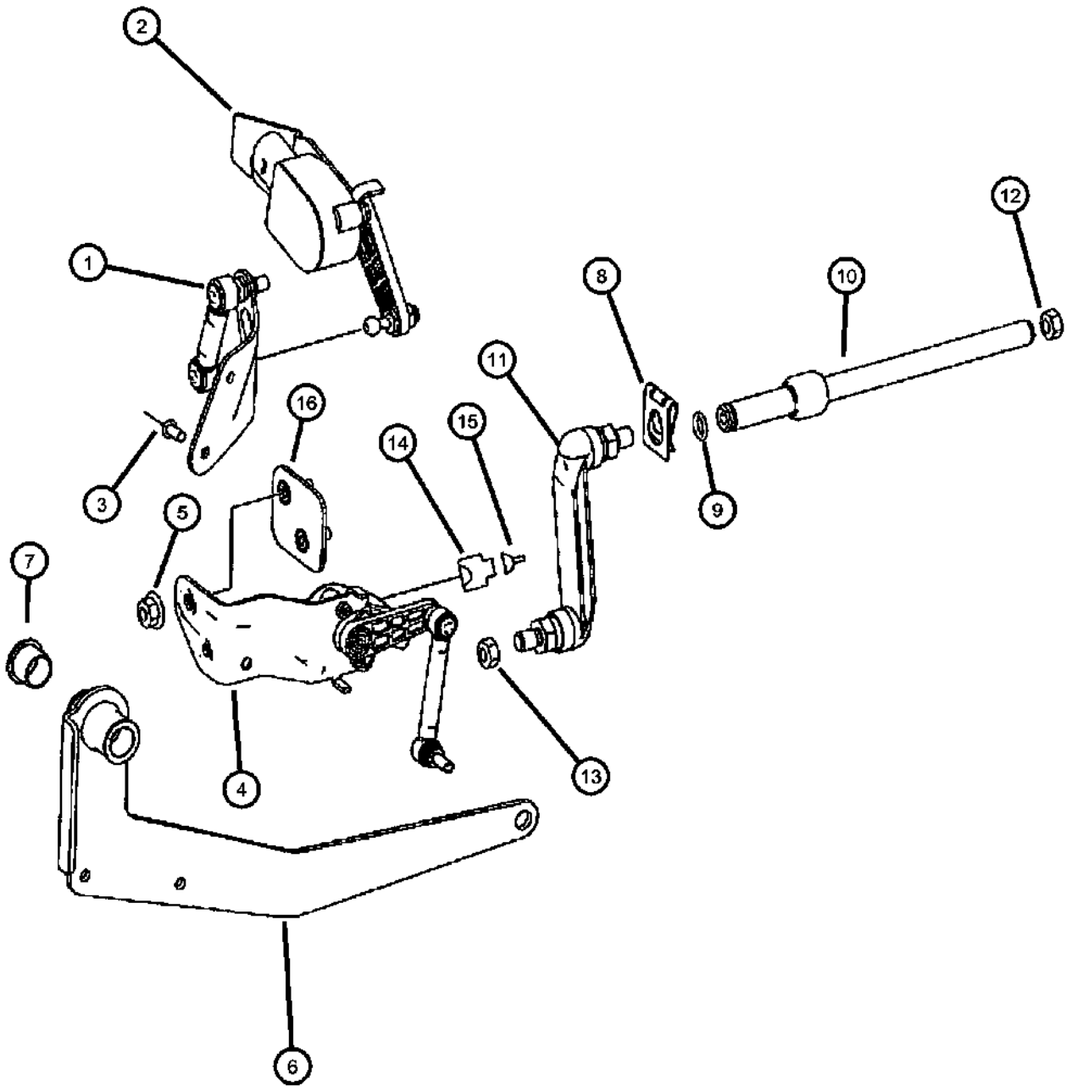

ITEM	PART NUMBER	QTY	LINE	SERIES	BODY	ENGINE	TRANS	TRIM	DESCRIPTION
1									BRACKET
	68013738AA	1	2, 3, 6, 7	L	13, 15, 17, 53, 55				With [LM2]
		1	3, 7	L	03, 05				With [LM2]
2									BRACKET
	68013739AA	1	2, 3, 6, 7	L	13, 15, 17, 53, 55				With [LM2]
		1	3, 7	L	03, 05				With [LM2]
3									RIVET
	05125819AA	4	3, 7	L	03, 05				
		4	2, 3, 6, 7	L	13, 15, 17, 53, 55				
4	68013834AA	1	2, 3, 6, 7	L					VALVE, Load sensing, [LM2] Altitude Sensor
5									NUT
	68004878AA	2	3, 7	L	03, 05				Sensor To Bracket [M6]
		2	2, 3, 6, 7	L	13, 15, 17, 53, 55				Sensor To Bracket [M6]
6									LEVER, Load Sensing
	05119337AA	1	3, 7	L	03, 05				
		1	2, 6	L	13, 15, 17, 53, 55				
7									BUSHING, Pedal Shaft
	05096550AA	2	3, 7	L	03, 05				
		2	2, 3, 6, 7	L	13, 15, 17, 53, 55				
8	68003170AA	1	2, 3, 6, 7	L					CLIP
9	68004877AA	1	2, 3, 6, 7	L					WASHER
10	68013836AA	1	2, 3, 6, 7	L					PIN
11									LINK, Load Sensing
	05103920AA	1	3, 7	L	03, 05				Sensor To Rear Axle
		1	2, 3, 6, 7	L	13, 15, 17, 53, 55				Sensor To Rear Axle
12									NUT
	06105172AA	1	2, 3, 6, 7	L					Lever To Pivot Pin
	68004878AA	1	3, 7	L	03, 05				Lever To Bolt, Rear Axle Carrier

SPRINTER (VB)

SERIES	LINE	BODY	ENGINE	TRANSMISSION
L = LOWLINE	3 = HD DODGE 2WD 2 = Med. Duty DODGE 2WD	03 = CAB CHASSIS WHEEL BASE 3 05 = CAB CHASSIS WHEEL BASE 5 13 = 119 WB 53 = 119 WB 15 = VAN WHEEL BASE 5 55 = WAGON WHEEL BASE 5 17 = VAN WHEEL BASE 7	EG2 = 3.5L V6 Gas Engine EXM = 3.0L V6 Turbo Diesel Engine	DGZ = 5-Speed Auto W5A380 Transmission

Dynamic Headlamp Range Control
Figure 3-230

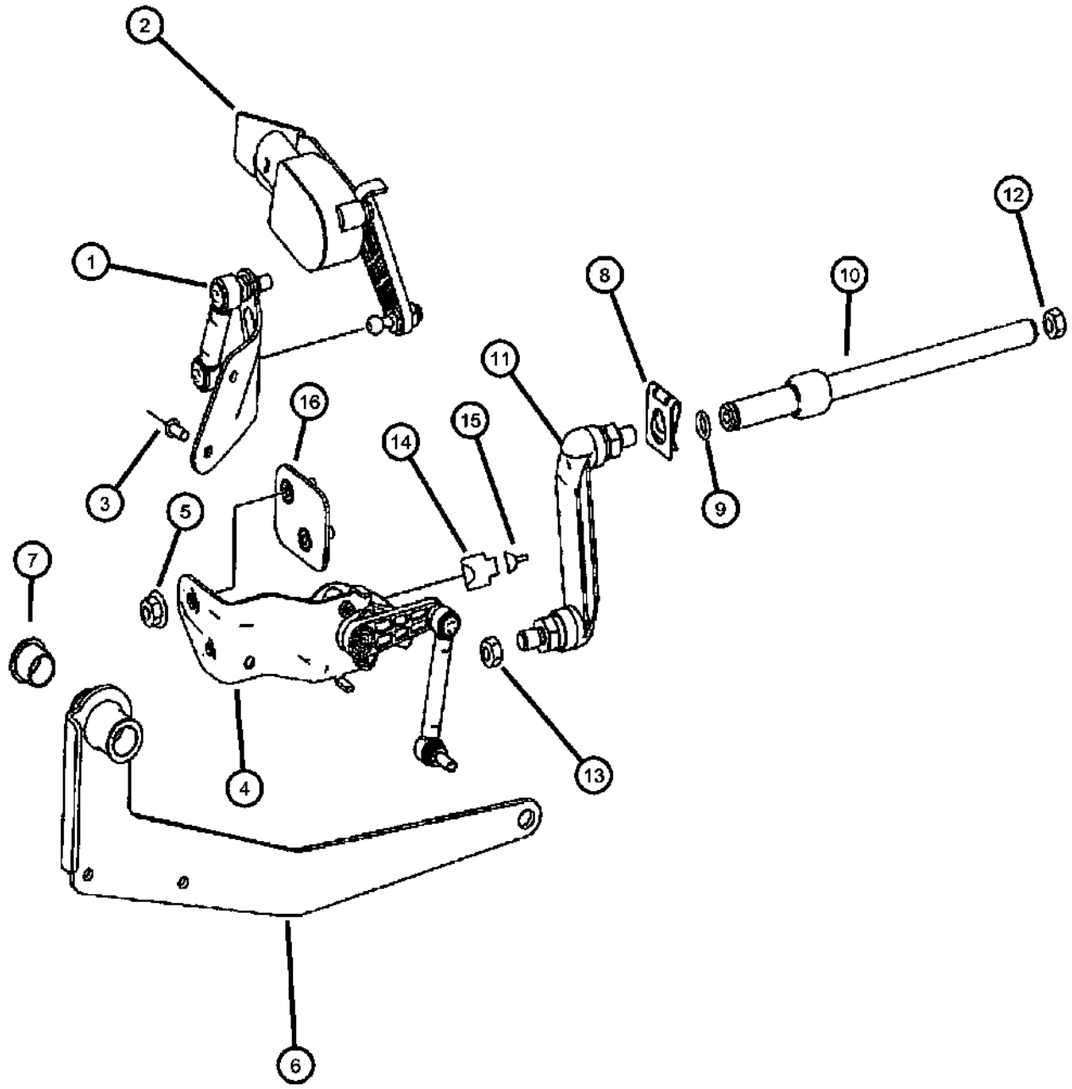

ITEM	PART NUMBER	QTY	LINE	SERIES	BODY	ENGINE	TRANS	TRIM	DESCRIPTION
		1	2, 3, 6, 7	L	13, 15, 17, 53, 55				Lever To Bolt, Rear Axle Carrier
13									NUT
	06105170AA	2	2, 3, 6, 7	L	13, 15, 17, 53, 55				Rod To Lever [M6]
		2	3, 7	L	03, 05				Rod To Lever [M6]
14	68011431AA	1	2, 3, 6, 7	L					CONNECTOR, Rear Axle Sensor, Headlamp Range Adjustment [A51]
15	68016725AA	1	2, 3, 6, 7	L					TERMINAL, [A51] Connector
16	68013840AA	1	3, 7	L	13, 15, 17				BRACKET

SPRINTER (VB)

SERIES	LINE	BODY	ENGINE	TRANSMISSION
L = LOWLINE	3 = HD DODGE 2WD 2 = Med. Duty DODGE 2WD	03 = CAB CHASSIS WHEEL BASE 3 05 = CAB CHASSIS WHEEL BASE 5 13 = 119 WB 53 = 119 WB 15 = VAN WHEEL BASE 5 55 = WAGON WHEEL BASE 5 17 = VAN WHEEL BASE 7	EG2 = 3.5L V6 Gas Engine EXM = 3.0L V6 Turbo Diesel Engine	DGZ = 5-Speed Auto W5A380 Transmission

Axle Vent & Differential Cover
Figure 3-310

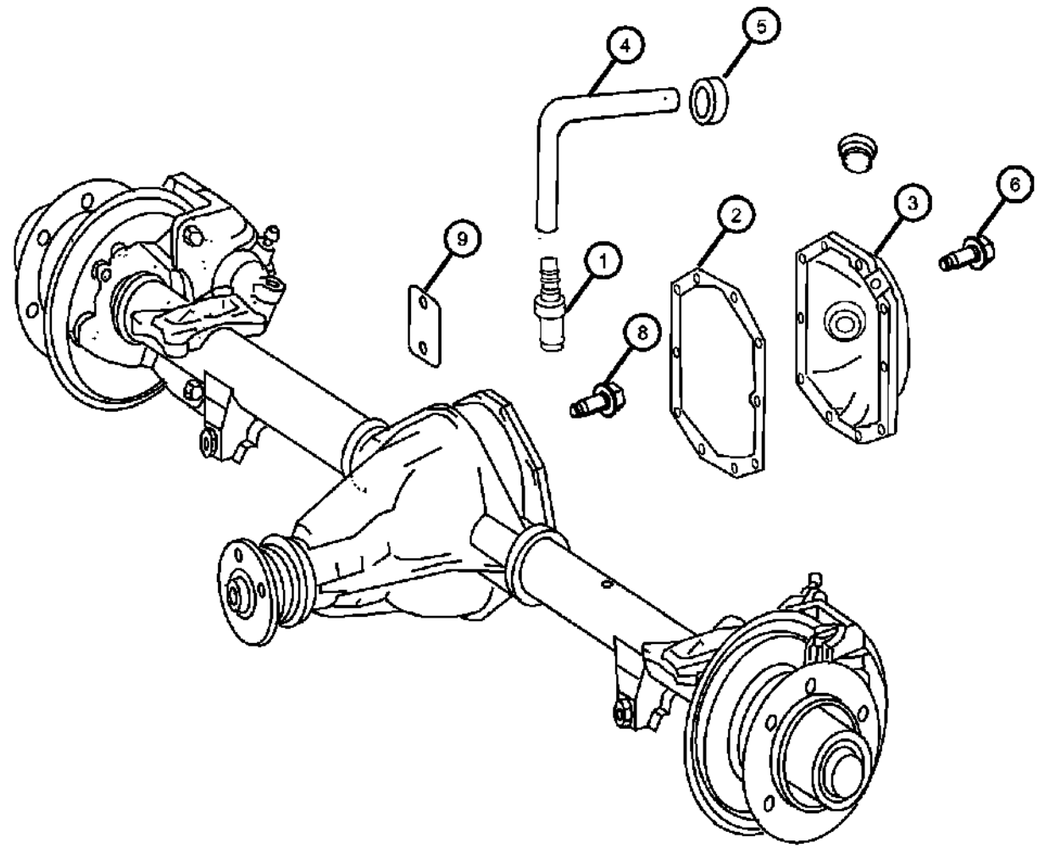

ITEM	PART NUMBER	QTY	LINE	SERIES	BODY	ENGINE	TRANS	TRIM	DESCRIPTION
1									VENT, Axle
	05103948AA	1	3, 7	L	03, 05, 13, 15, 17				
		1	2, 6	L	13, 15, 17, 53, 55				
2									GASKET, Differential Cover
	68018926AA	1	2, 6	L	13, 15, 17, 53, 55				With Special Version Number [35-504000 / 17]
	68025238AA	1	3, 7	L	03, 05, 13, 15, 17				With Special Version Number [35-504000 / 04]
3									COVER, Differential
	68025233AA	1	3, 7	L	03, 05, 13, 15, 17				
	68018924AA	1	2, 6	L	13, 15, 17, 53, 55				
4									HOSE, Axle Vent
	05104076AA	1	3, 7	L	03, 05				
		1	2, 3, 6, 7	L	13, 15, 17, 53, 55				
5	05133520AA	1	2, 3, 6, 7	L					GROMMET
6									BOLT, Differential Cover
	04862663AA	10	2, 6	L					With Special Version Number [35 504000/10/17] & [35 504232/06/07/09/10]
	68025239AA	1	3, 7	L	03, 05, 13, 15, 17				With Special Version Number [35 504000/04]
-7									PLUG
	05133796AA	1	2, 3, 6, 7	L					Drain Plug
	05134372AA	1	3, 7	L	03, 05, 13, 15, 17				Fill Plug
		1	2, 6	L	13, 15, 17, 53, 55				Fill Plug
8									SCREW
	06104243AA	4	3, 7	L	03, 05, 13, 15, 17				Bearing Cover To Axle / With Special Version Numbers [504232 / 09 / 10 / 12 / 13 / 15 / 16

SPRINTER (VB)

SERIES	LINE	BODY	ENGINE	TRANSMISSION
L = LOWLINE	3 = HD DODGE 2WD 2 = Med. Duty DODGE 2WD	03 = CAB CHASSIS WHEEL BASE 3 05 = CAB CHASSIS WHEEL BASE 5 13 = 119 WB 53 = 119 WB 15 = VAN WHEEL BASE 5 55 = WAGON WHEEL BASE 5 17 = VAN WHEEL BASE 7	EG2 = 3.5L V6 Gas Engine EXM = 3.0L V6 Turbo Diesel Engine	DGZ = 5-Speed Auto W5A380 Transmission

Axle Vent & Differential Cover
Figure 3-310

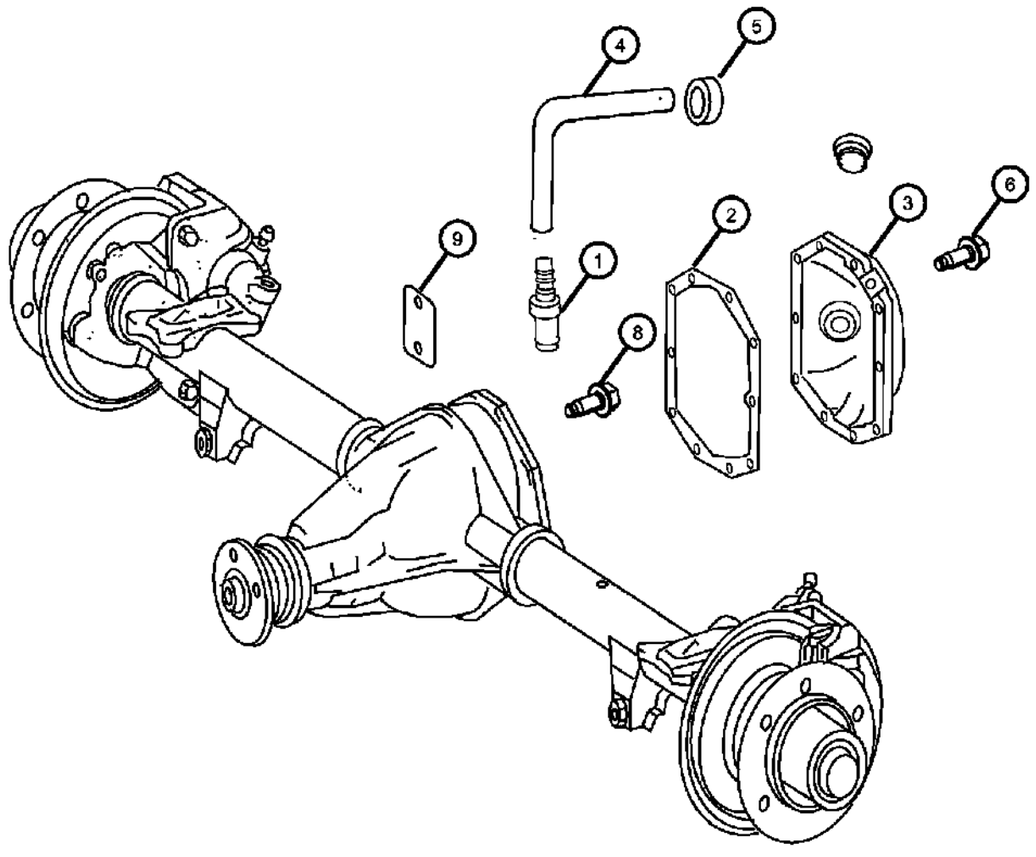

ITEM	PART NUMBER	QTY	LINE	SERIES	BODY	ENGINE	TRANS	TRIM	DESCRIPTION
		4	2, 6	L	13, 15, 17, 53, 55				Bearing Cover To Axle / With Special Version Numbers [504232 / 09 / 10 / 12 / 13 / 15 / 16
9		4							PLATE, Identification Information Tag Not Serviced, (NOT SERVICED),

SPRINTER (VB)

SERIES	LINE	BODY	ENGINE	TRANSMISSION
L = LOWLINE	3 = HD DODGE 2WD 2 = Med. Duty DODGE 2WD	03 = CAB CHASSIS WHEEL BASE 3 05 = CAB CHASSIS WHEEL BASE 5 13 = 119 WB 53 = 119 WB 15 = VAN WHEEL BASE 5 55 = WAGON WHEEL BASE 5 17 = VAN WHEEL BASE 7	EG2 = 3.5L V6 Gas Engine EXM = 3.0L V6 Turbo Diesel Engine	DGZ = 5-Speed Auto W5A380 Transmission

Group - 4

Parking Brake

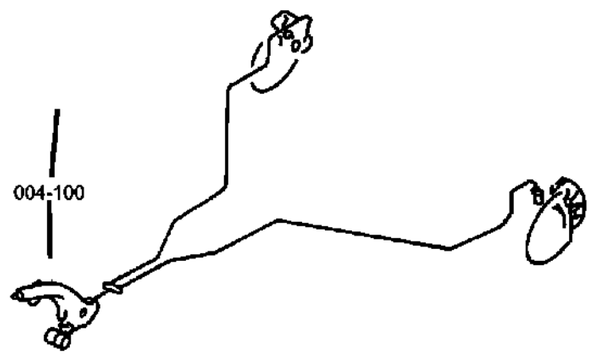

Illustration Title — Group-Fig. No.

Parking Brake Lever and Cables

Parking Brake Lever ..... Fig. 4 - 110
Parking Brake / Single Rear Wheel ..... Fig. 4 - 140
Parking Brake / Dual Rear Wheel ..... Fig. 4 - 150

004-100 Parking Brake Lever and Cables 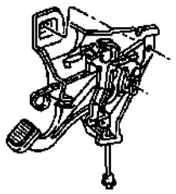			

Parking Brake Lever
Figure 4-110

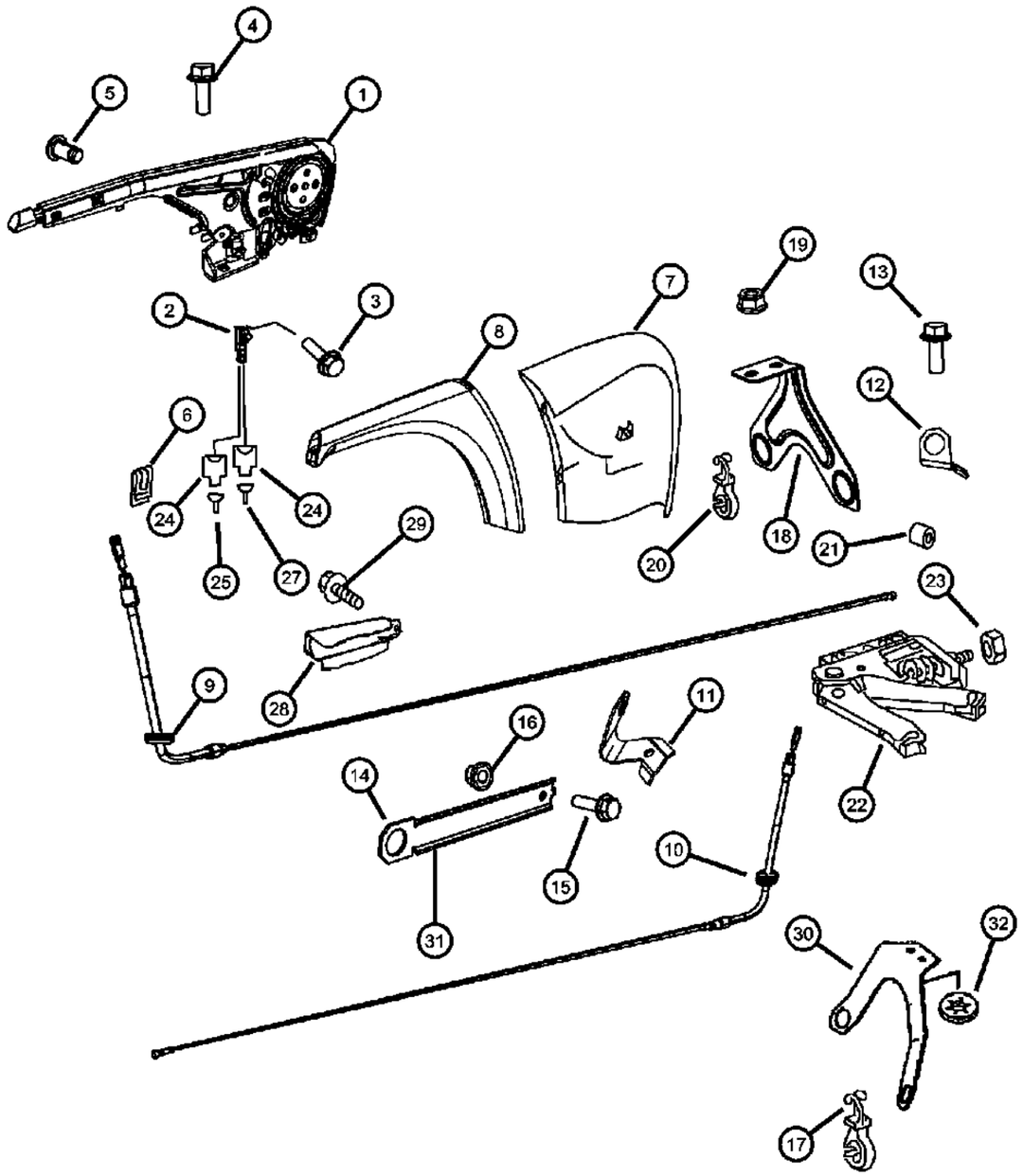

ITEM	PART NUMBER	QTY	LINE	SERIES	BODY	ENGINE	TRANS	TRIM	DESCRIPTION
NOTE:									
Sales Code:									
[DGZ]=5 Speed Automatic Transmission - [W5A380]									
[EGZ]=3.5L V-6 Gas Engine [Mercedes Benz]									
[EXM]=3.0L Turbo Diesel Engine [Mercedes Benz]									
1	68013464AA	1	2, 3, 6, 7						LEVER, Parking Brake
2									SWITCH, Parking Brake
	05103540AA	1	3, 7		03, 05				Hand Brake Tell-Tale Lamp
		1	2, 3, 6, 7		13, 15, 17, 53, 55				Hand Brake Tell-Tale Lamp
3	05175204AA	1	2, 3, 6, 7						SCREW, Switch Fastening [M5x12]
4									BOLT
	06104215AA	2	3, 7		03, 05				
		2	2, 3, 6, 7		13, 15, 17, 53, 55				Mounting, Lever To Seat Frame [M10x25]
5	05140886AA	1	2, 3, 6, 7						PIN, Parking Brake Handle, Brake Cable To Hand Brake Lever
6	05126243AA	1	2, 3, 6, 7						CLIP, Retaining, Pin To Hand Brake Lever
7	68013465AA	1	2, 3, 6, 7						COVER
8	68013466AA	1	2, 3, 6, 7						HANDLE
9									CABLE, Parking Brake
	68013473AA	1	2, 3, 6, 7		03, 13, 53				Front
	68013474AA	1	2, 3, 6, 7		05, 15, 17, 55				Front
10	68013780AA	2	2, 6		13, 15, 17, 53, 55				CABLE, Parking Brake
11	68013467AA	1	2, 3, 6, 7						BRACKETLeft
12	68013468AA	1	2, 3, 6, 7						BRACKETRight
13	68004878AA	2	2, 3, 6, 7		13, 15, 17, 53, 55				NUT, [M6]
14									BRACKET
	05119274AA	1	2, 6		13, 15, 17, 53, 55				Left
	05119277AA	1	2, 6		13, 15, 17, 53, 55				Right
15	05073723AB	2	2, 3, 6, 7		13, 15, 17, 53, 55				SCREW, Bracket To Shock Absorber Bracket [M8x20]
16	06105169AA	2	3, 6, 7, 2						NUT, Bracket To Shock Absorber Bracket [M8]

SPRINTER (VB)

SERIES	LINE	BODY	ENGINE	TRANSMISSION
L = LOWLINE	3 = HD DODGE 2WD 2 = Med. Duty DODGE 2WD	03 = CAB CHASSIS WHEEL BASE 3 05 = CAB CHASSIS WHEEL BASE 5 13 = 119 WB 53 = 119 WB 15 = VAN WHEEL BASE 5 55 = WAGON WHEEL BASE 5 17 = VAN WHEEL BASE 7	EG2 = 3.5L V6 Gas Engine EXM = 3.0L V6 Turbo Diesel Engine	DGZ = 5-Speed Auto W5A380 Transmission

Parking Brake Lever
Figure 4-110

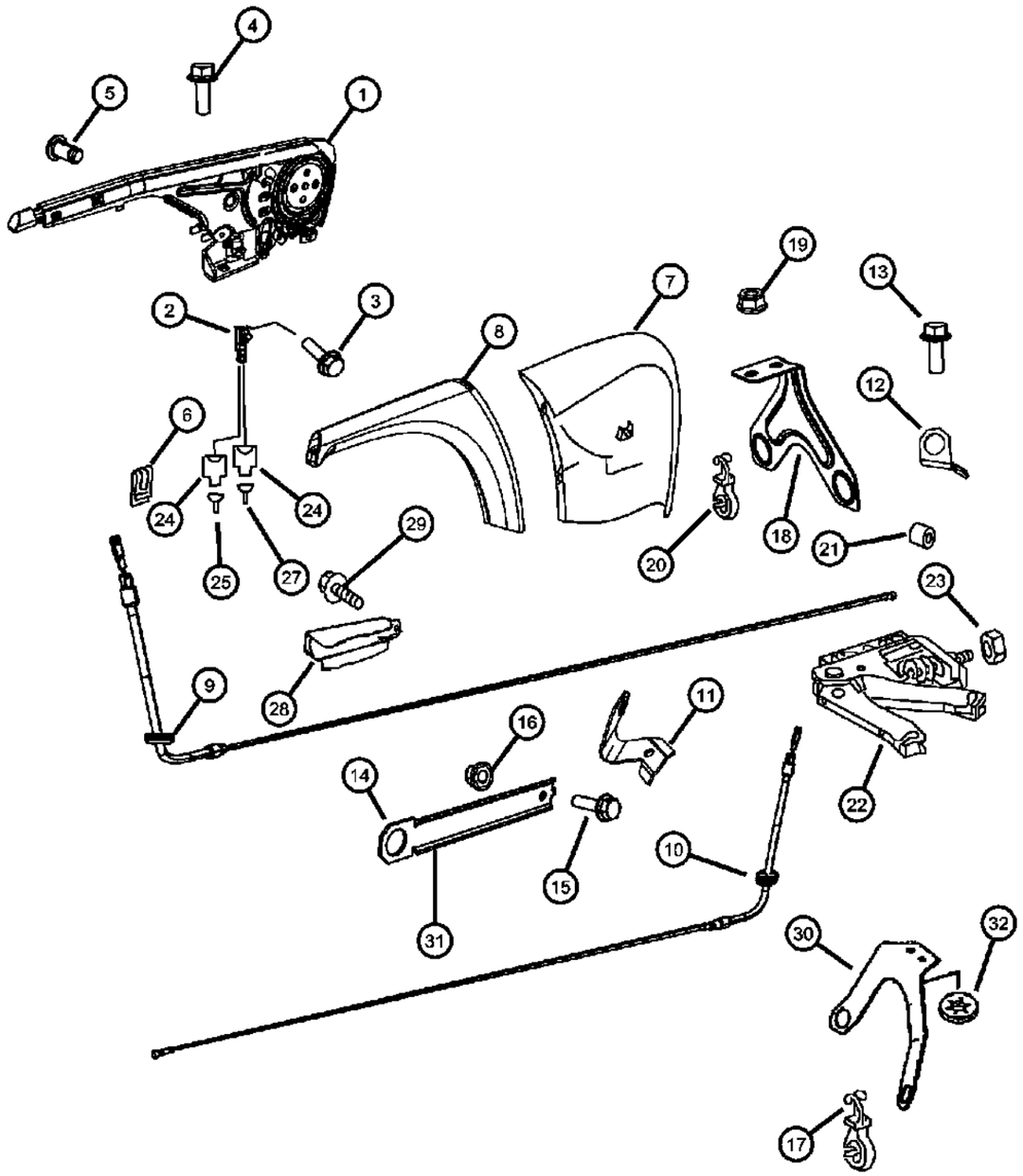

ITEM	PART NUMBER	QTY	LINE	SERIES	BODY	ENGINE	TRANS	TRIM	DESCRIPTION
17	05119283AA	2	2, 6		13, 15, 17, 53, 55				CLIP, Parking Brake Cable, At Bracket
18	68013470AA	1	2, 6		13, 53				BRACKET, To Under Floor Center
19	68004878AA	2	2, 6		13, 15, 17, 53, 55				NUT, Bracket To Substructure [M6]
20	05119283AA	2	2, 6		13, 15, 17, 53, 55				CLIP, Parking Brake Cable, At Bracket
21	05098414AA	2	2, 6		13, 15, 17, 53, 55				PIN, PIN
22									ADJUSTER, Parking Brake
	68013478AA	1	2, 3, 6, 7						
	68013479AA	1	3, 7		03, 05				With [2ZD]
		1	3, 7		13, 15, 17				With [2ZD]
23									NUT
	05126206AA	1	2, 3, 6, 7						To Adjuster [M8-8]
	06105170AA	2	2, 3, 6, 7						Adjuster To Bearing Bracket [M10]
24	05120696AA	1	2, 3, 6, 7		03, 05, 13, 15, 17				CONNECTOR, Parking Brake Inspec tion Switch 1 - Pin [S12]
25	05133365AA	1	2, 3, 6, 7		03, 05, 13, 15, 17				TERMINAL, Female, [S12]
-26	05133504AA	1	2, 3, 6, 7		03, 05, 13, 15, 17				TERMINAL, Parking Brake Inspection Switch [S12]
27	05133367AA	1	2, 3, 6, 7		03, 05, 13, 15, 17				PLUG, Terminal [S12]
28									BOOT
	68013476AA	1	3, 7						Right
	68013477AA	1	3, 7						Left
29	06104140AA	4	3, 7		03, 05				SCREW, Protective Cap To Rear Axle [M6x10]
30	68013471AA	1	3, 7						BRACKET, Cable To Frame
31									BRACKET, Parking Brake
	68013469AA	2	3, 7						To Chassis Date [03/30/2007]
	68026526AA	2	3, 7						After Chassis Date [03/30/2007]
32	68026526AA	2							WASHER, Lock, (NOT SERVICED),

SPRINTER (VB)

SERIES	LINE	BODY	ENGINE	TRANSMISSION
L = LOWLINE	3 = HD DODGE 2WD 2 = Med. Duty DODGE 2WD	03 = CAB CHASSIS WHEEL BASE 3 05 = CAB CHASSIS WHEEL BASE 5 13 = 119 WB 53 = 119 WB 15 = VAN WHEEL BASE 5 55 = WAGON WHEEL BASE 5 17 = VAN WHEEL BASE 7	EG2 = 3.5L V6 Gas Engine EXM = 3.0L V6 Turbo Diesel Engine	DGZ = 5-Speed Auto W5A380 Transmission

AR = use ase required - = Non illustrrated part

<< RETURN TO GROUP INDEX

Parking Brake / Single Rear Wheel
Figure 4-140

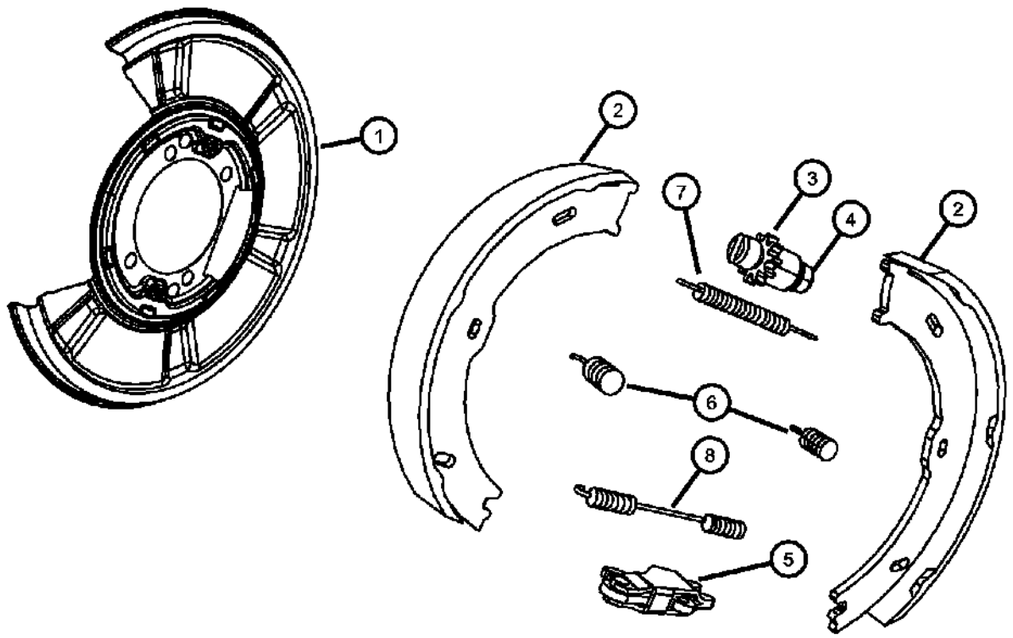

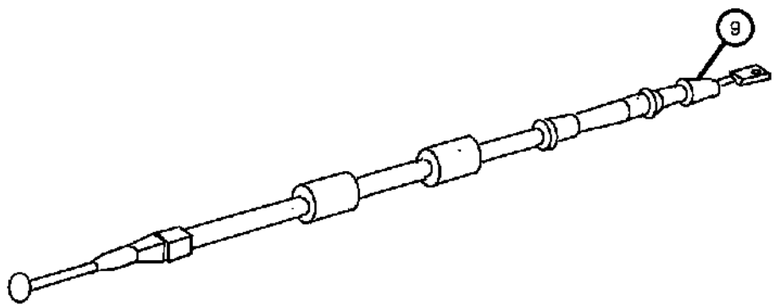

ITEM	PART NUMBER	QTY	LINE	SERIES	BODY	ENGINE	TRANS	TRIM	DESCRIPTION
NOTE: Sales Code: [DGZ]=5 Speed Automatic Transmission - [W5A380] [EGZ]=3.5L V-6 Gas Engine [Mercedes Benz] [EXM]=3.0L Turbo Diesel Engine [Mercedes Benz]									
1	68013766AA	2	6, 2		13, 15, 17, 53, 55				BACKING PLATE, With Special Version Code [42-504012 / 10]
2	68019140AA	1	2, 6		13, 15, 17, 53, 55				SHOE AND LINING, Parking Brake, Includes: All Moving Parts / Special Version Code [42-504016 / 07]
3	05139234AA	2	2, 6		13, 15, 17, 53, 55				ADJUSTER, Parking Brake, With Special Version Code [42-504016 / 07]
4	05139233AA	2	2, 6		13, 15, 17, 53, 55				BUSHING, With Special Version Code [42-504016 / 07]
5	05101691AA	2	2, 6		13, 15, 17, 53, 55				PLATE, Brake Shoe Guide, With Special Version Code [42-504016 / 07]
6	05098005AA	4	2, 6		13, 15, 17, 53, 55				SPRING, Brake Shoe Hold Down, With Special Version Code [42-504016 / 07]
7	05098006AA	2	2, 6		13, 15, 17, 53, 55				SPRING, Brake Shoe to Shoe, With Special Version Code [42-504016 / 07]
8	05139480AA	2	2, 6		13, 15, 17, 53, 55				SPRING, Brake Shoe to Shoe, With Special Version Code [42-504016 / 07]
9	68013780AA	2	2, 6		13, 15, 17, 53, 55				CABLE, Parking Brake, With Special Version Code [42-504013 / 06]
-10	05098414AA	2	2, 6		13, 15, 17, 53, 55				PIN, PIN

SPRINTER (VB)

SERIES	LINE	BODY	ENGINE	TRANSMISSION
L = LOWLINE	3 = HD DODGE 2WD 2 = Med. Duty DODGE 2WD	03 = CAB CHASSIS WHEEL BASE 3 05 = CAB CHASSIS WHEEL BASE 5 13 = 119 WB 53 = 119 WB 15 = VAN WHEEL BASE 5 55 = WAGON WHEEL BASE 5 17 = VAN WHEEL BASE 7	EG2 = 3.5L V6 Gas Engine EXM = 3.0L V6 Turbo Diesel Engine	DGZ = 5-Speed Auto W5A380 Transmission

Parking Brake / Dual Rear Wheel
Figure 4-150

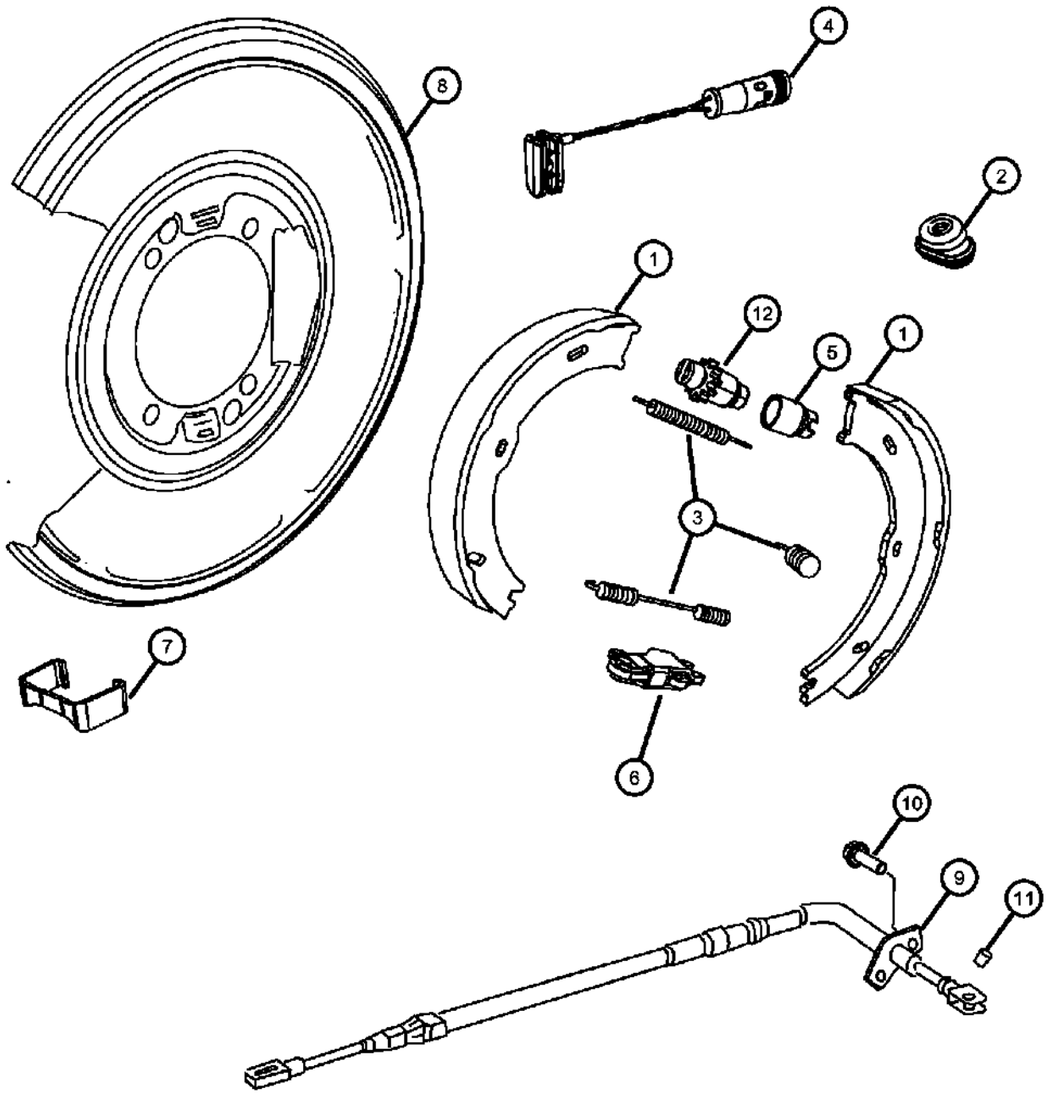

ITEM	PART NUMBER	QTY	LINE	SERIES	BODY	ENGINE	TRANS	TRIM	DESCRIPTION
NOTE:									
Sales Code:									
[DGZ]=5 Speed Automatic Transmission - [W5A380]									
[EGZ]=3.5L V-6 Gas Engine [Mercedes Benz]									
[EXM]=3.0L Turbo Diesel Engine [Mercedes Benz]									
1	68026168AA	1	3, 7		03, 05, 13, 15, 17				SHOE AND LINING, Parking Brake, Note: Shoe Kit Includes Springs, Adjuster & Related Parts, With Special Version Code [42 504016 / 08 / 10]
2	04862657AA	2	3, 7		03, 05, 13, 15, 17				BUSHING, With Special Version Code [42 504016 / 08 / 10]
3	04862656AA	2	3, 7		03, 05, 13, 15, 17				SPRING KIT, Brake Shoe Hold Down, With Special Version Code [42 504016 / 08 / 10]
4	68006717AA	2	2, 6		13, 15, 17, 53, 55				SENSOR, Brake wear
5	68013778AA	2	3, 7		05, 13, 15, 17, 03				BUSHING, With Special Version Code [42 504016 / 08 / 10] & [35 504000 / 04]
6									RETAINER
	04862658AA	1	3, 7		03, 05, 13, 15, 17				With Special Version Code [42 504016 / 08 / 10], Left
	04862660AA	1	3, 7		03, 05, 13, 15, 17				With Special Version Code [42 504016 / 08 / 10], Right
7	68013779AA	1	3, 7		03, 05, 13, 15, 17				PAD, PAD, With Special Version Code [42 504016 / 08 / 10] & [35 504000 / 04]
8									BACKING PLATE
	04862655AA	1	3, 7		03, 05, 13, 15, 17				With Special Version Code [42 504016 / 08 / 10], Left
	04862661AA	1	3, 7		03, 05, 13, 15, 17				With Special Version Code [42 504016 / 08 / 10], Right
9	68013475AA	2	3, 7		03, 05, 13, 15, 17				CABLE, Parking Brake
10	05098124AA	2	3, 7		03, 05, 13, 15, 17				SCREW, With Special Version Code [35 504000/04]
11	05098414AA	2	3, 7		03, 05, 13, 15, 17				PIN, PIN, With Special Version Code [35 504000/04]
12	68013478AA	1	2, 3, 6, 7						ADJUSTER, Parking Brake

SPRINTER (VB)

SERIES	LINE	BODY	ENGINE	TRANSMISSION
L = LOWLINE	3 = HD DODGE 2WD 2 = Med. Duty DODGE 2WD	03 = CAB CHASSIS WHEEL BASE 3 05 = CAB CHASSIS WHEEL BASE 5 13 = 119 WB 53 = 119 WB 15 = VAN WHEEL BASE 5 55 = WAGON WHEEL BASE 5 17 = VAN WHEEL BASE 7	EG2 = 3.5L V6 Gas Engine EXM = 3.0L V6 Turbo Diesel Engine	DGZ = 5-Speed Auto W5A380 Transmission

Group - 5
Service Brakes

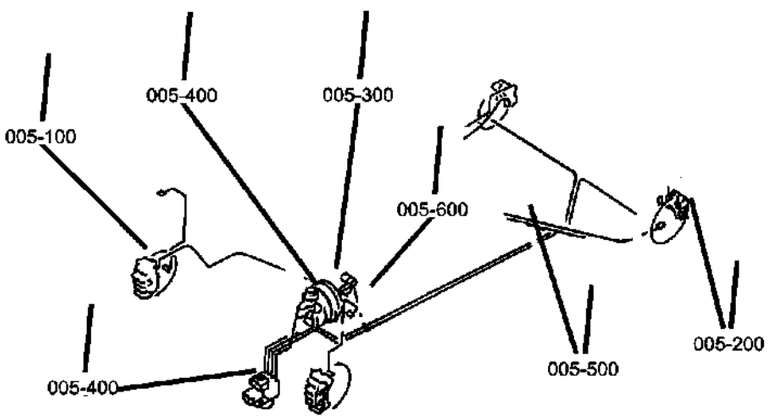

005-100 Front Brakes 	**005-200** Rear Brakes 	**005-300** Power Brake Booster 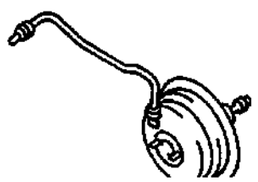	**005-400** Brake Master Cylinder 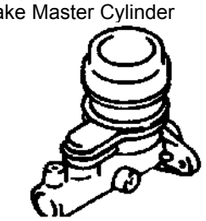
005-500 Brake Lines and Hoses 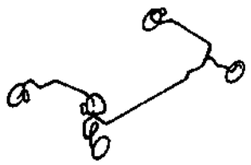	**005-600** Brake Pedals 		

Group - 5 Service Brakes

Illustration Title — Group-Fig. No.

Front Brakes
Brakes, Front ..... Fig. 5 - 110
Brakes, Front ..... Fig. 5 - 120

Rear Brakes
Rear Brakes ..... Fig. 5 - 210
Rear Brakes ..... Fig. 5 - 220

Power Brake Booster
Brake Booster ..... Fig. 5 - 310
Brake & Engine Vacuum Lines ..... Fig. 5 - 320
Vacuum Pump ..... Fig. 5 - 330

Brake Master Cylinder
Brake Master Cylinder ..... Fig. 5 - 410
Hydraulic Control Unit ..... Fig. 5 - 420

Brake Lines and Hoses
Brake Lines ..... Fig. 5 - 510
Brake Lines ..... Fig. 5 - 520
Brake Lines ..... Fig. 5 - 530

Brake Pedals
Brake Pedal ..... Fig. 5 - 610

Brakes, Front
Figure 5-110

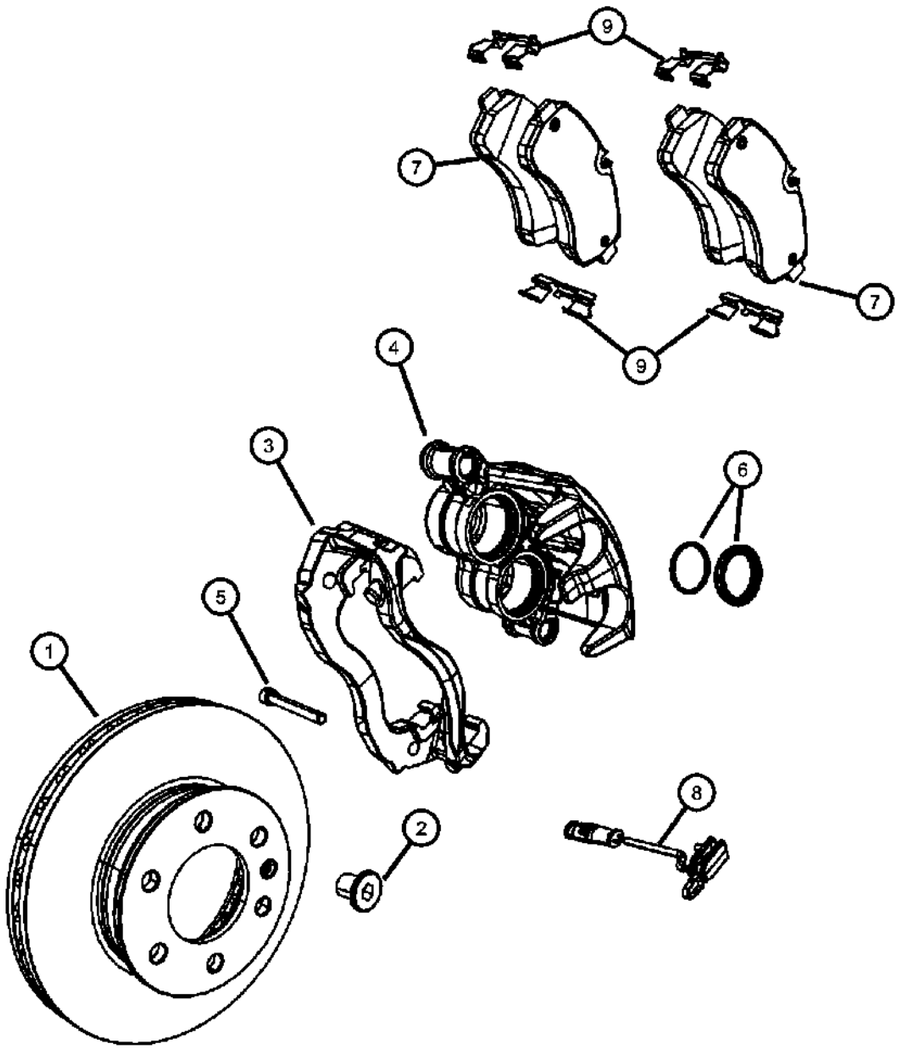

ITEM	PART NUMBER	QTY	LINE	SERIES	BODY	ENGINE	TRANS	TRIM	DESCRIPTION

NOTE:Seal Kit Does Not Include Caliper Pistons. Caliper Pistons Only Serviced With Caliper.
Sales Codes:
[DGZ]=5 Speed Automatic Transmission [W5A380]/ Mercedes Benz
[EXM]=3.0L V-6 Turbo Diesel Engine
[EG2]=3.5L V-6 Gas Engine

1	68006716AA	1	2, 3, 6, 7		13, 15, 17, 53, 55				ROTOR, BrakeFront Brake Disc
2	05140611AA	2	2, 6		13, 15, 17, 53, 55				SCREW, Set, Brake Disc To Wheel Hub [M8x12MM]
3	68006724AA	2	2, 6						ADAPTER, Disc Brake Caliper
4									CALIPER, Disc Brake
	68006723AA	1	2, 6						Left
	68006735AA	1	2, 6						Right
5	06104257AA	2	2, 3, 6, 7		13, 15, 17, 53, 55				BOLT, Hex Flange Head, M14x1.50x40.00
6	68006731AA	2	2, 6						SEAL, Caliper Piston, Caliper Piston Seal Kit
7	68006732AA	1	2, 6						PAD, Disc Brake
8	68006717AA	2	2, 6		13, 15, 17, 53, 55				SENSOR, Brake wear
9	68032643AA	2	2, 3, 6, 7						CLIP, Brake Anti-Rattle

SPRINTER (VB)

SERIES	LINE	BODY	ENGINE	TRANSMISSION
L = LOWLINE	3 = HD DODGE 2WD 2 = Med. Duty DODGE 2WD	03 = CAB CHASSIS WHEEL BASE 3 05 = CAB CHASSIS WHEEL BASE 5 13 = 119 WB 53 = 119 WB 15 = VAN WHEEL BASE 5 55 = WAGON WHEEL BASE 5 17 = VAN WHEEL BASE 7	EG2 = 3.5L V6 Gas Engine EXM = 3.0L V6 Turbo Diesel Engine	DGZ = 5-Speed Auto W5A380 Transmission

Brakes, Front
Figure 5-120

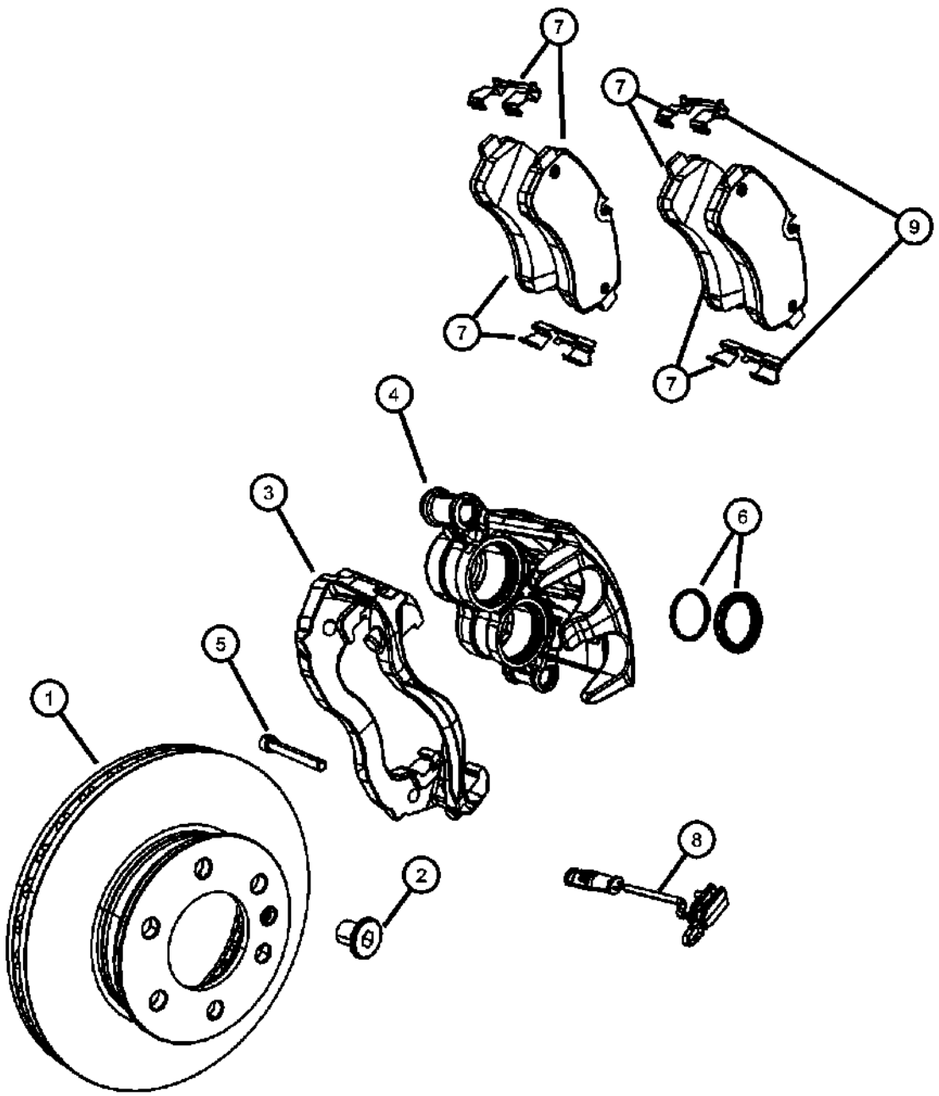

ITEM	PART NUMBER	QTY	LINE	SERIES	BODY	ENGINE	TRANS	TRIM	DESCRIPTION
NOTE:Seal Kit Does Not Include Caliper Pistons. Caliper Pistons Only Serviced With Caliper.									
Sales Codes:									
[DGZ]=5 Speed Automatic Transmission [W5A380]/ Mercedes Benz									
[EXM]=3.0L V-6 Turbo Diesel Engine									
[EG2]=3.5L V-6 Gas Engine									
1	68006716AA	1	3, 7		03, 05				ROTOR, BrakeFront Brake Disc
2	05140611AA	2	3, 7		03, 05				SCREW, Set, Brake Disc To Wheel Hub [M8x12MM]
3	68006726AA	2	3, 7						ADAPTER, Disc Brake Caliper
4									CALIPER, Disc Brake
	68006725AA	1	3, 7						Left
	68006736AA	1	3, 7						Right
5									BOLT, Hex Flange Head, M14x1.50x40.00
	06104257AA	4	3, 7		03, 05				
	05140611AA	1	3, 7		03, 05				
6	68006733AA	2	3, 7						SEAL, Caliper Piston, Caliper Piston Seal Kit
7	68006734AA	1	3, 7						BRAKE PAD
8	68006717AA	4	3, 7		03, 05, 13, 15, 17				SENSOR, Brake wear
9	68032643AA	2	2, 3, 6, 7						CLIP, Brake Anti-Rattle

SPRINTER (VB)

SERIES	LINE	BODY	ENGINE	TRANSMISSION
L = LOWLINE	3 = HD DODGE 2WD 2 = Med. Duty DODGE 2WD	03 = CAB CHASSIS WHEEL BASE 3 05 = CAB CHASSIS WHEEL BASE 5 13 = 119 WB 53 = 119 WB 15 = VAN WHEEL BASE 5 55 = WAGON WHEEL BASE 5 17 = VAN WHEEL BASE 7	EG2 = 3.5L V6 Gas Engine EXM = 3.0L V6 Turbo Diesel Engine	DGZ = 5-Speed Auto W5A380 Transmission

Rear Brakes
Figure 5-210

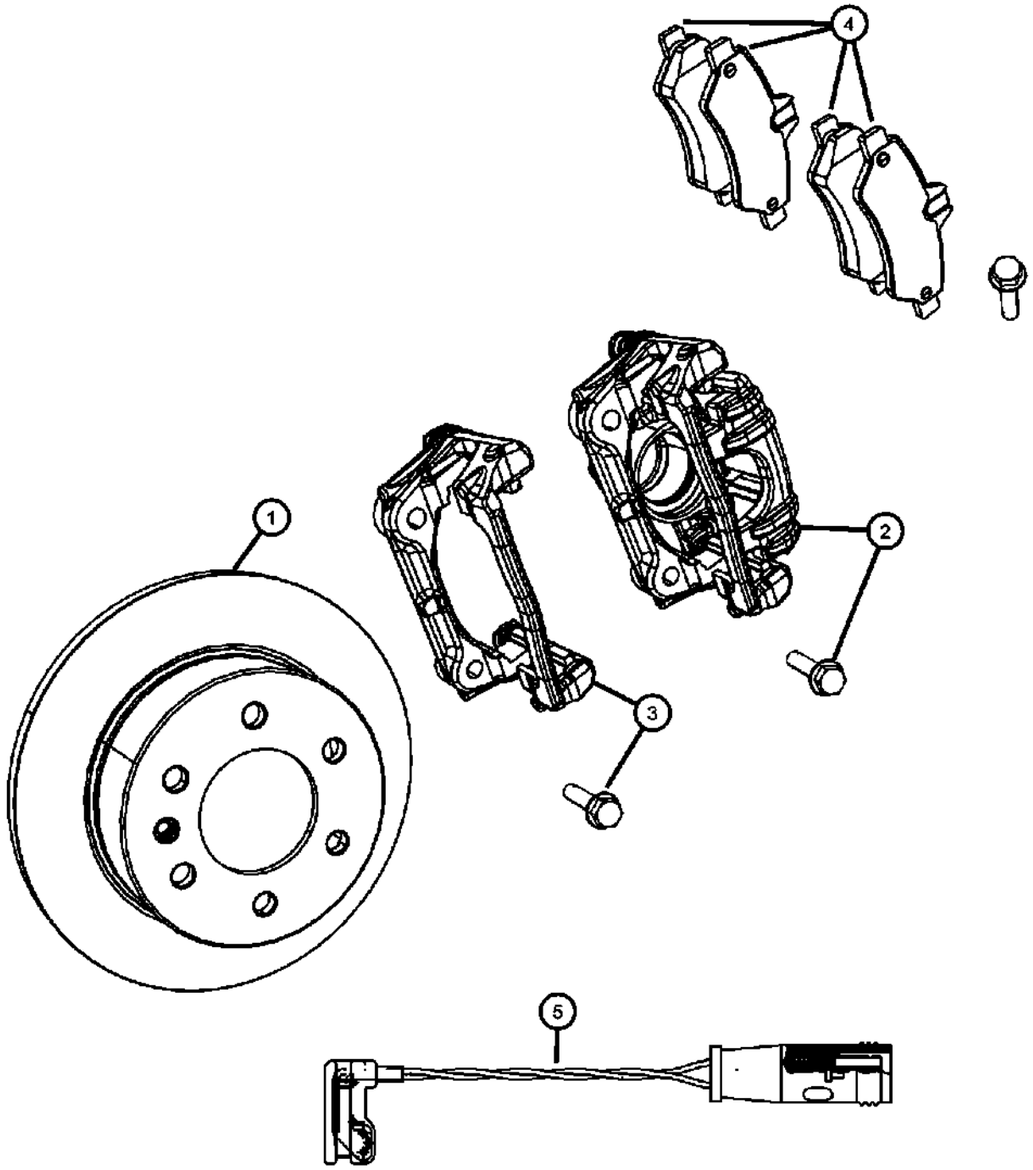

ITEM	PART NUMBER	QTY	LINE	SERIES	BODY	ENGINE	TRANS	TRIM	DESCRIPTION
NOTE:Seal Kit Or Rear Caliper Piston Kit Not Serviced. If Needed, Brake Caliper Must Be Replaced.									
Sales Codes:									
1	68013764AA	2	2, 6		13, 15, 17, 53, 55				ROTOR, Brake, With Special Version Code [42 504025 / 20]
2									CALIPER, Disc Brake
	68019136AA	1	2, 6		13, 15, 17, 53, 55				[Bosch] Special Version Code [42 504025 / 20] / Does Not Include Brake Caliper Adapter, Left
	68019137AA	1	2, 6		13, 15, 17, 53, 55				[Bosch] Special Version Code [42 504025 / 20] / Does Not Include Brake Caliper Adapter, Right
3									ADAPTER, Disc Brake Caliper
	68019138AA	1	2, 6		13, 15, 17, 53, 55				[Bosch] Special Version Code [42 504025 / 20], Left
	68019139AA	1	2, 6		13, 15, 17, 53, 55				[Bosch] Special Version Code [42 504025 / 20], Right
4	04862602AA	1	2, 6		13, 15, 17, 53, 55				PAD KIT, Disc Brake, [Galfer] Brand / With Special Version Code [42 504025 / 20]
5	68013762AA	4	2, 6		13, 15, 17, 53, 55				SENSOR, Brake wear, [2500] Series Only, Rear

SPRINTER (VB)

SERIES	LINE	BODY	ENGINE	TRANSMISSION
L = LOWLINE	3 = HD DODGE 2WD 2 = Med. Duty DODGE 2WD	03 = CAB CHASSIS WHEEL BASE 3 05 = CAB CHASSIS WHEEL BASE 5 13 = 119 WB 53 = 119 WB 15 = VAN WHEEL BASE 5 55 = WAGON WHEEL BASE 5 17 = VAN WHEEL BASE 7	EG2 = 3.5L V6 Gas Engine EXM = 3.0L V6 Turbo Diesel Engine	DGZ = 5-Speed Auto W5A380 Transmission

Rear Brakes
Figure 5-220

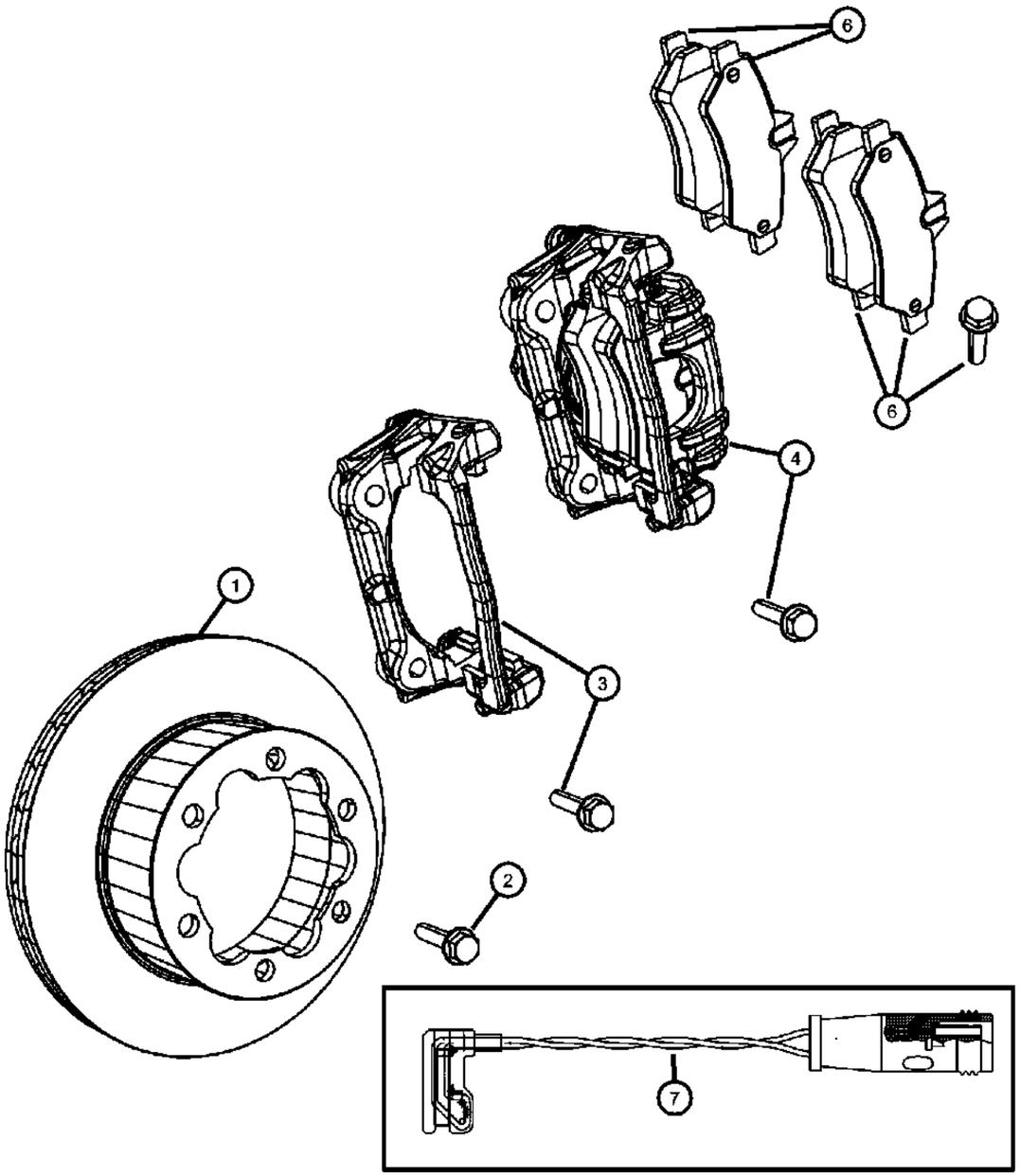

ITEM	PART NUMBER	QTY	LINE	SERIES	BODY	ENGINE	TRANS	TRIM	DESCRIPTION
NOTE:Seal Kit Or Rear Caliper Piston Kit Not Serviced. If Needed, Brake Caliper Must Be Replaced.									
Sales Codes:									
1	68013765AA	2	3, 7		03, 05, 13, 15, 17				ROTOR, Brake, Rear Wheel Hub Special Version Code [35 504019 / 69] / Caliper Special Version Code [504025 / 37 / 53]
2	06104258AA	6	3, 7		03, 05, 13, 15, 17				SCREW, Hex Flange Head, Brake Rotor To Hub / Special Version Code [35 504019 / 69]
3									BOLT, Brake Mounting
	68026166AA	1	3, 7		03, 05, 13, 15, 17				Brake Anchor & Bolt / With Special Version Code [42 504025 / 37], Left
	68026167AA	1	3, 7		03, 05, 13, 15, 17				Brake Anchor & Bolt / With Special Version Code [42 504025 / 53], Right
4	68025560AA	1	3, 7		03, 05, 13, 15, 17				CALIPER, Disc Brake, Left, [Bosch] Without Brake Anchor & Brake Pads / Includes Mounting Bolt / With Special Version Code [35 504025 / 37]
-5	68025561AA	1	3, 7		03, 05, 13, 15, 17				CALIPER, Disc Brake, Right, [Bosch] Without Brake Anchor & Brake Pads / Includes Mounting Bolt / With Special Version Code [35 504025 / 53]
6	04862603AA	1	3, 7		03, 05, 13, 15, 17				PAD KIT, Disc Brake, [Federal Mogul Brand] With Special Version Code [42 504025 / 37 / 53]
7	68006717AA	4	3, 7		03, 05, 13, 15, 17				SENSOR, Brake wear, [3500] Series Only / Sensor For Front & Rear Brakes, Front And Rear

SPRINTER (VB)

SERIES	LINE	BODY	ENGINE	TRANSMISSION
L = LOWLINE	3 = HD DODGE 2WD 2 = Med. Duty DODGE 2WD	03 = CAB CHASSIS WHEEL BASE 3 05 = CAB CHASSIS WHEEL BASE 5 13 = 119 WB 53 = 119 WB 15 = VAN WHEEL BASE 5 55 = WAGON WHEEL BASE 5 17 = VAN WHEEL BASE 7	EG2 = 3.5L V6 Gas Engine EXM = 3.0L V6 Turbo Diesel Engine	DGZ = 5-Speed Auto W5A380 Transmission

Brake Booster
Figure 5-310

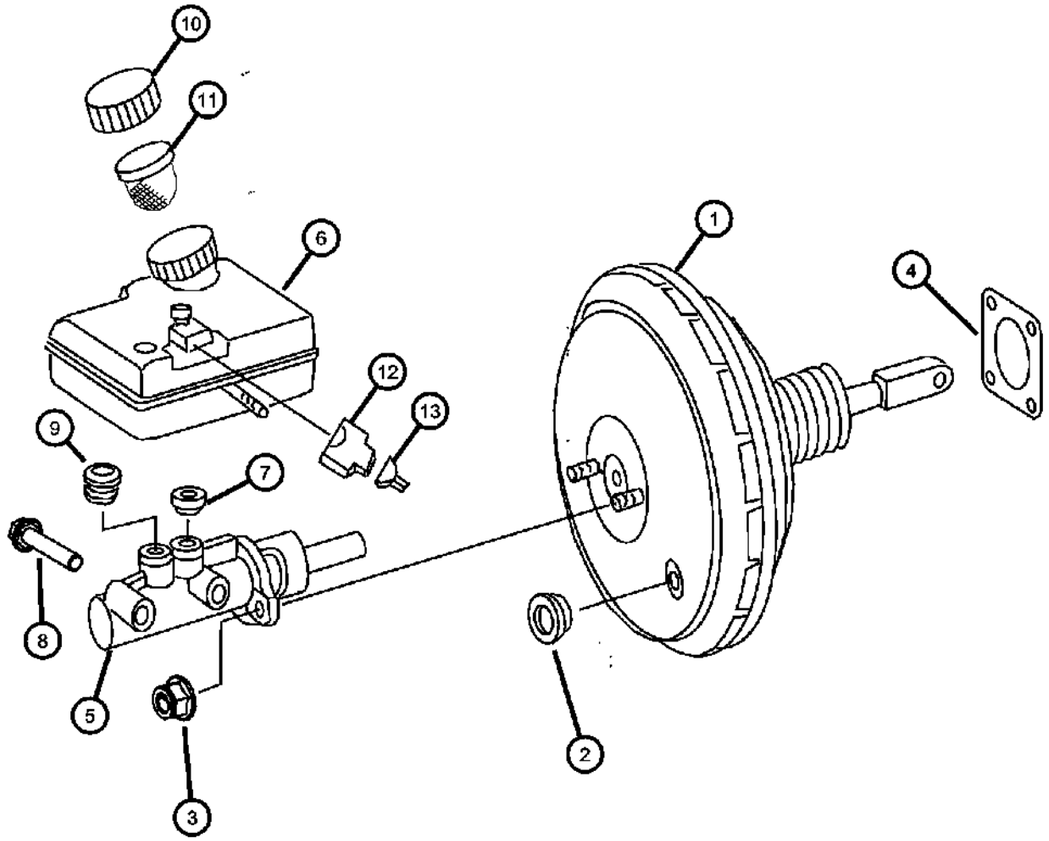

ITEM	PART NUMBER	QTY	LINE	SERIES	BODY	ENGINE	TRANS	TRIM	DESCRIPTION
1	68013551AA	1	2, 3, 6, 7						BOOSTER, Power Brake
2	05133696AA	1	2, 3, 6, 7						GASKET, Vacuum Line To Brake Booster
3	05126237AA	3	2, 3, 6, 7						NUT, Hex
4	05119386AA	1	2, 3, 6, 7						GASKET, Booster To Dash
5	68005054AA	1	2, 3, 6, 7						MASTER CYLINDER, Brake
6									RESERVOIR, Brake Master Cylinder
	68005056AA	1	3, 7						
	68005057AA	1	2, 6						
7	68005058AA	1	2, 3, 6, 7						SEAL, Brake Cylinder To Reservoir
8	68005059AA	1	2, 3, 6, 7						SCREW
9	68005060AA	1	2, 3, 6, 7						SEAL, Brake Cylinder To Reservoir
10	68013552AA	1	2, 3, 6, 7						CAP, Master Cylinder Reservoir
11	05098371AB	1	2, 3, 6, 7						FILTER, Brake Master Cylinder
12	05120277AA	1	2, 3, 6, 7						CONNECTOR, Wiring Repair, 2 Pin Connector [S11]
13	05103874AA	1	2, 3, 6, 7						TERMINAL, [0.75MM] [S11] Contact
-14	05120860AA	1	2, 3, 6, 7						GASKET, Connector Gasket [1.6 / 1.9MM] [S11] Contact

SPRINTER (VB)

SERIES	LINE	BODY	ENGINE	TRANSMISSION
L = LOWLINE	3 = HD DODGE 2WD 2 = Med. Duty DODGE 2WD	03 = CAB CHASSIS WHEEL BASE 3 05 = CAB CHASSIS WHEEL BASE 5 13 = 119 WB 53 = 119 WB 15 = VAN WHEEL BASE 5 55 = WAGON WHEEL BASE 5 17 = VAN WHEEL BASE 7	EG2 = 3.5L V6 Gas Engine EXM = 3.0L V6 Turbo Diesel Engine	DGZ = 5-Speed Auto W5A380 Transmission

AR = use ase required - = Non illustrrated part

<< RETURN TO GROUP INDEX

Brake & Engine Vacuum Lines
Figure 5-320

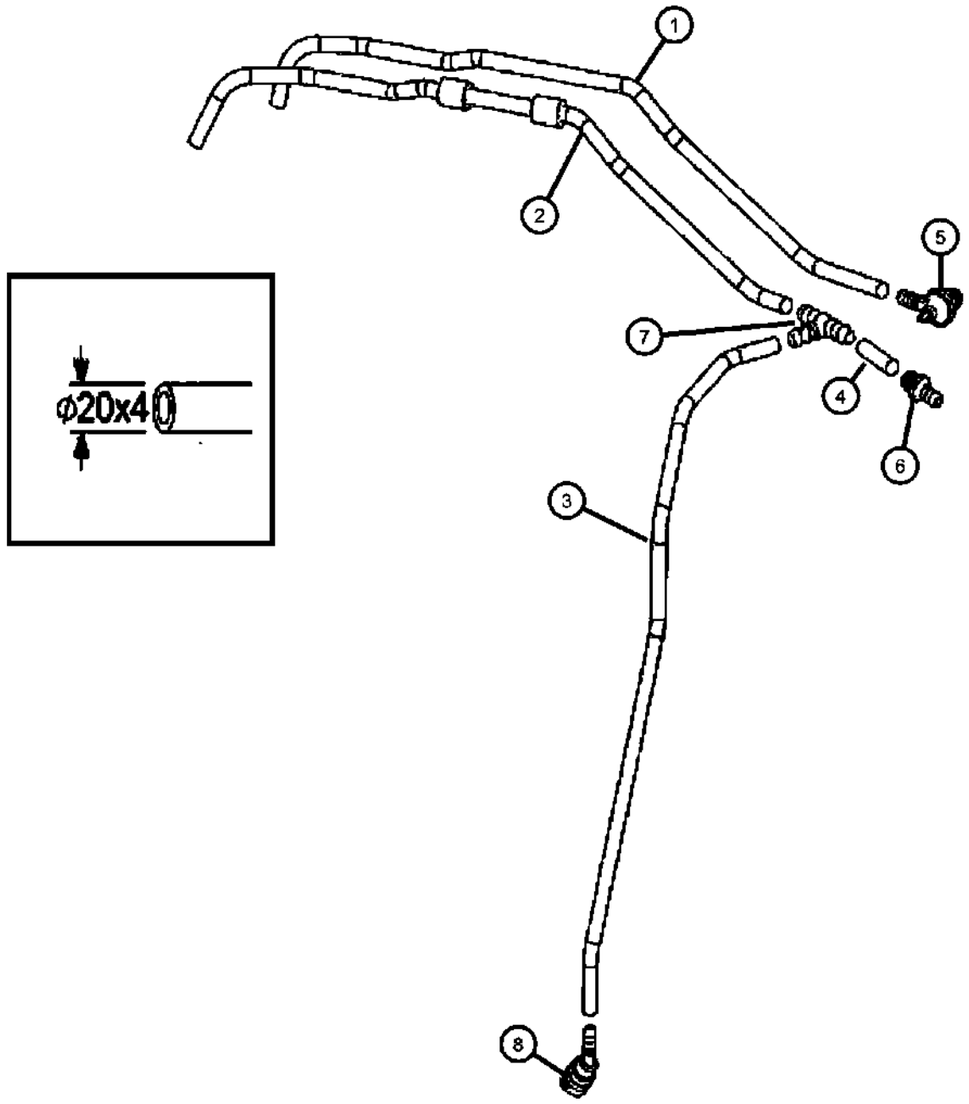

ITEM	PART NUMBER	QTY	LINE	SERIES	BODY	ENGINE	TRANS	TRIM	DESCRIPTION
1	68013560AA	1	2, 3, 6, 7						HOSE, Vacuum, [EG2]
2									HOSE, Vacuum
	68013556AA	1	2, 6						
	68013556AB	3	3, 7						
3	68013556AB	3	3, 7						HOSE, Vacuum, T-Fitting To Tank
4	68013559AA	1	3, 7		03, 05, 13, 15, 17				HOSE, Vacuum
5	05119362AA	1	2, 3, 6, 7						VALVE, Brake Booster Check
6									CONNECTOR
	05126007AA	1	2, 3, 6, 7		13, 15, 17, 53, 55				
		1	2, 3, 6, 7		03, 05				
7	05174298AA	1	3, 7						FITTING
8	05125804AA	1	3, 7						COUPLING, Male

SPRINTER (VB)

SERIES	LINE	BODY	ENGINE	TRANSMISSION
L = LOWLINE	3 = HD DODGE 2WD 2 = Med. Duty DODGE 2WD	03 = CAB CHASSIS WHEEL BASE 3 05 = CAB CHASSIS WHEEL BASE 5 13 = 119 WB 53 = 119 WB 15 = VAN WHEEL BASE 5 55 = WAGON WHEEL BASE 5 17 = VAN WHEEL BASE 7	EG2 = 3.5L V6 Gas Engine EXM = 3.0L V6 Turbo Diesel Engine	DGZ = 5-Speed Auto W5A380 Transmission

Vacuum Pump
Figure 5-330

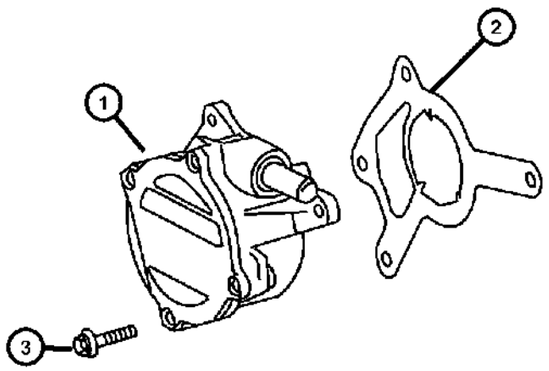

ITEM	PART NUMBER	QTY	LINE	SERIES	BODY	ENGINE	TRANS	TRIM	DESCRIPTION
1	05175907AA	1	2, 3, 6, 7						PUMP, Vacuum
2	05175755AA	1	2, 3, 6, 7						GASKET, Vacuum Pump
3	06104006AA	4	2, 3, 6, 7						BOLT, Torx Socket Head, M6X1.00X20.00

SPRINTER (VB)

SERIES	LINE	BODY	ENGINE	TRANSMISSION
L = LOWLINE	3 = HD DODGE 2WD 2 = Med. Duty DODGE 2WD	03 = CAB CHASSIS WHEEL BASE 3 05 = CAB CHASSIS WHEEL BASE 5 13 = 119 WB 53 = 119 WB 15 = VAN WHEEL BASE 5 55 = WAGON WHEEL BASE 5 17 = VAN WHEEL BASE 7	EG2 = 3.5L V6 Gas Engine EXM = 3.0L V6 Turbo Diesel Engine	DGZ = 5-Speed Auto W5A380 Transmission

Brake Master Cylinder
Figure 5-410

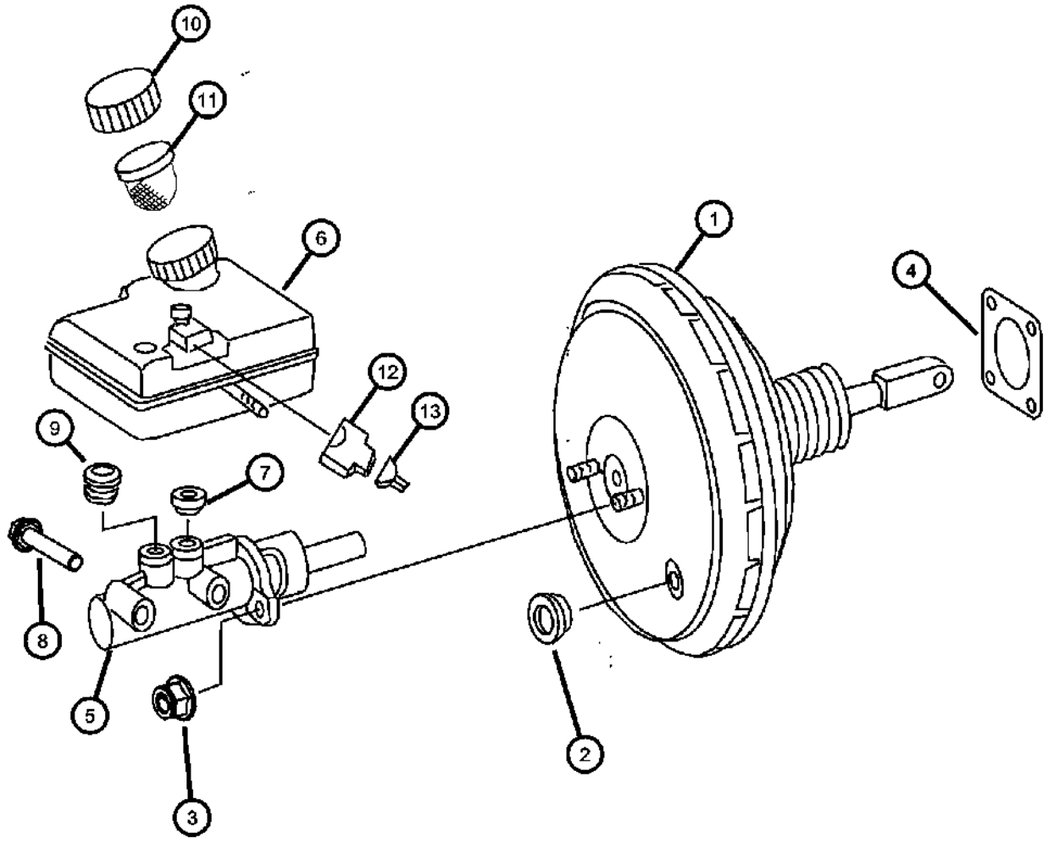

ITEM	PART NUMBER	QTY	LINE	SERIES	BODY	ENGINE	TRANS	TRIM	DESCRIPTION
1	68013551AA	1	2, 3, 6, 7						BOOSTER, Power Brake
2	05133696AA	1	2, 3, 6, 7						GASKET, Vacuum Line To Brake Booster
3									NUT, Hex
	05126237AA	3	2, 6		13, 15, 17, 53, 55				
		3	2, 3, 6, 7		03, 05, 13, 15, 17				
4	05119386AA	1	2, 3, 6, 7						GASKET, Booster To Dash
5	68005054AA	1	2, 3, 6, 7						MASTER CYLINDER, Brake
6									RESERVOIR, Brake Master Cylinder
	68005056AA	1	3, 7						
	68005057AA	1	2, 6						
7	68005058AA	1	2, 3, 6, 7						SEAL, Brake Cylinder To Reservoir
8	68005059AA	1	2, 3, 6, 7						SCREW
9	68005060AA	1	2, 3, 6, 7						SEAL, Brake Cylinder To Reservoir
10	68013552AA	1	2, 3, 6, 7						CAP, Master Cylinder Reservoir
11	05098371AB	1	2, 3, 6, 7						FILTER, Brake Master Cylinder
12	05120277AA	1	2, 3, 6, 7						CONNECTOR, Wiring Repair, 2 Pin Connector [S11]
13	05103874AA	1	2, 3, 6, 7						TERMINAL, [0.75MM] [S11] Contact
-14	05120860AA	1	2, 3, 6, 7						GASKET, Connector Gasket [1.6 / 1.9MM] [S11] Contact

SPRINTER (VB)

SERIES	LINE	BODY	ENGINE	TRANSMISSION
L = LOWLINE	3 = HD DODGE 2WD 2 = Med. Duty DODGE 2WD	03 = CAB CHASSIS WHEEL BASE 3 05 = CAB CHASSIS WHEEL BASE 5 13 = 119 WB 53 = 119 WB 15 = VAN WHEEL BASE 5 55 = WAGON WHEEL BASE 5 17 = VAN WHEEL BASE 7	EG2 = 3.5L V6 Gas Engine EXM = 3.0L V6 Turbo Diesel Engine	DGZ = 5-Speed Auto W5A380 Transmission

Hydraulic Control Unit
Figure 5-420

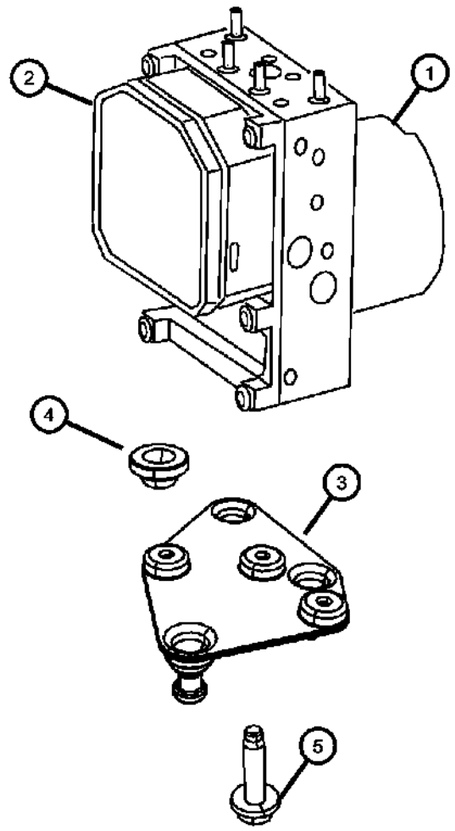

ITEM	PART NUMBER	QTY	LINE	SERIES	BODY	ENGINE	TRANS	TRIM	DESCRIPTION
NOTE:									
Sales Codes;									
[BNB]=Electronic Stability Program									
1									CONTROL UNIT, Anti-Lock Brake
	68026562AA	1	2, 6						With [BNB]
	68026567AA	1	3, 7						With [BNB]
2									MODULE, Anti-lock Brakes
	68013572AA	1	2, 6		13, 15, 17, 53, 55				With [BNB]
	68022025AA	1	3, 7		03, 05, 13, 15, 17				With [BNB]
3	68013573AA	1	2, 3, 6, 7						BRACKET, Hydraulic Control Unit
4									GROMMET
	05099283AA	3	3, 7		03, 05				
		3	2, 3, 6, 7		13, 15, 17, 53, 55				
5									SCREW
	06104142AA	2	3, 7		03, 05				Mounting
		2	2, 3, 6, 7		13, 15, 17, 53, 55				Mounting

SPRINTER (VB)

SERIES	LINE	BODY	ENGINE	TRANSMISSION
L = LOWLINE	3 = HD DODGE 2WD 2 = Med. Duty DODGE 2WD	03 = CAB CHASSIS WHEEL BASE 3 05 = CAB CHASSIS WHEEL BASE 5 13 = 119 WB 53 = 119 WB 15 = VAN WHEEL BASE 5 55 = WAGON WHEEL BASE 5 17 = VAN WHEEL BASE 7	EG2 = 3.5L V6 Gas Engine EXM = 3.0L V6 Turbo Diesel Engine	DGZ = 5-Speed Auto W5A380 Transmission

Brake Lines
Figure 5-510

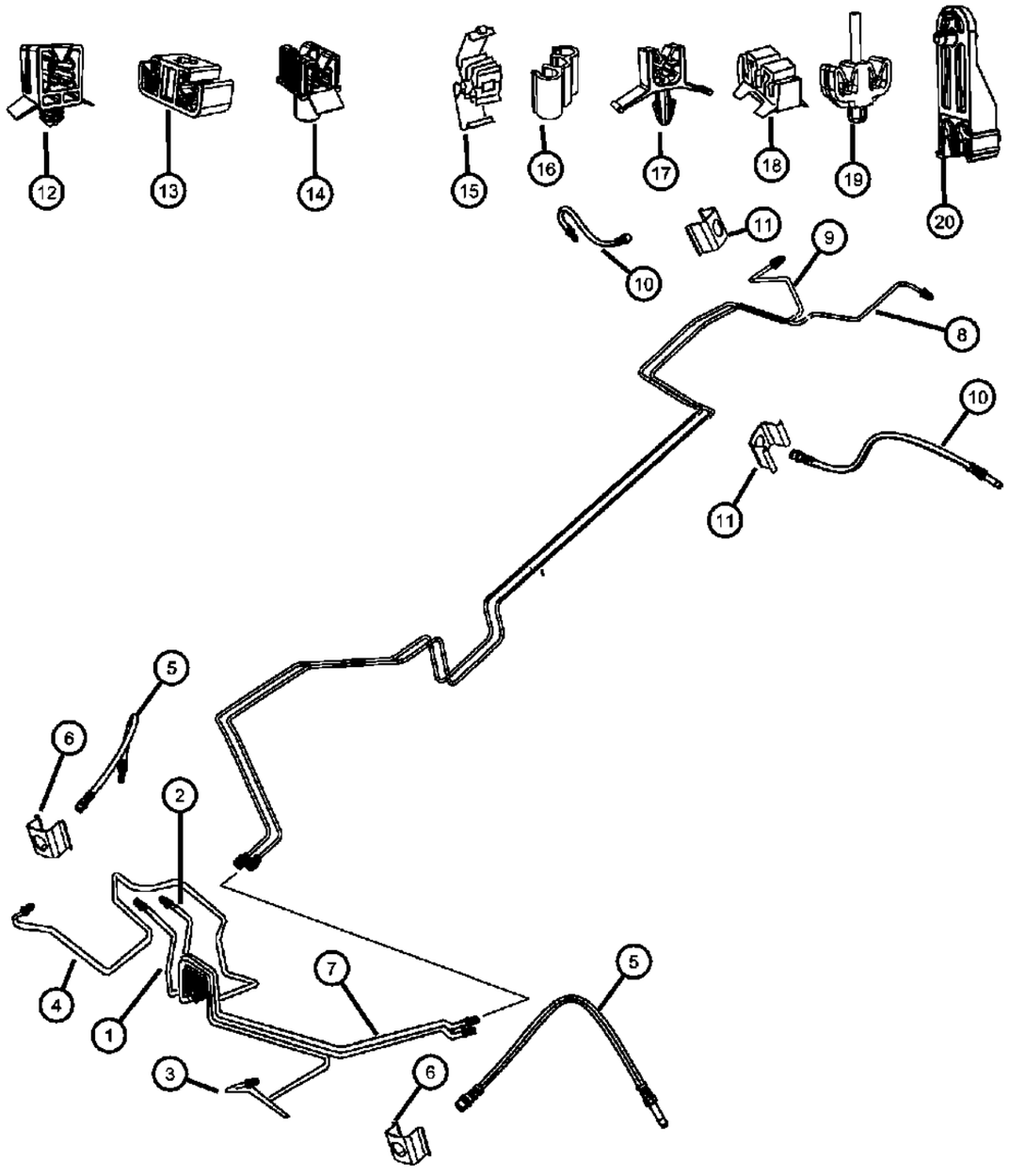

ITEM	PART NUMBER	QTY	LINE	SERIES	BODY	ENGINE	TRANS	TRIM	DESCRIPTION
NOTE:BRAKE LINES ARE TO BE ADAPTED OR MODIFIED TO FIT. BRAKE LINE FITTINGS NOT SERVICED, MUST ORDER BRAKE LINE.									
1	68013579AA	1	2, 3, 6, 7						TUBE, Brake
2	68013579AA	1	2, 3, 6, 7						TUBE, Brake, Master Cylinder To Hydraulic Unit Connection [HZ1] / See Note, Right
3	05133717AA	1	2, 3, 6, 7						TUBE, Brake, Hydraulic Unit To Hose Bracket [VL] [4.75x7x1590 MM] / See Note, Left
4	05136111AA	1	2, 3, 6, 7						TUBE, Brake, Hydraulic Assembly To Hose Bracket / [RF], Right
5	68013581AA	2	2, 3, 6, 7						HOSE, BrakeRight & Left, Front
6	05098140AA	2	2, 3, 6, 7		13, 15, 17, 53, 55				CLIP, Spring, Brake Hose To Bracket, Right & Left
7	05133712AA	2	2, 3, 6, 7						TUBE, Brake, Hydraulic Unit To Separation Point / [HL] / [4.75x0.7x1395 MM] / See Note, Right & Left
8	68013599AA	1	2, 6		13, 53				TUBE, Brake, From Separation Point At Front To Left Rear Axle
9	68013594AA	1	2, 6		13, 53				TUBE, Brake, From Separation Point At Front To Right Rear Axle
10	68013582AA	2	2, 6		13, 15, 17, 53, 55				HOSE, Brake, Rear Axle Hose, Right & Left
11	05098140AA	2	2, 3, 6, 7		13, 15, 17, 53, 55				CLIP, Spring, Brake Hose To Bracket
12	68011037AA	1	2, 3, 6, 7		13, 15, 17, 53, 55				RETAINER, Brake Line Holder
13	68013615AA	1	2, 3, 6, 7						RETAINER, Brake Line Holder
14	68011033AA	1	2, 3, 6, 7						RETAINER, Brake Line Holder
15	68013611AA	1	2, 3, 6, 7		13, 15, 17, 53, 55				CLAMP, Brake, Brake Line
16	05119689AA	1	2, 3, 6, 7		13, 15, 17, 53, 55				CLIP, Brake Line
17	05119329AA	4	2, 3, 6, 7		13, 15, 17, 53, 55				CLIP, Brake Line
18	68013612AA	3	2, 3, 6, 7						RETAINER
19	68013612AA	3	2, 3, 6, 7						RETAINER
20	68013614AA	4	2, 3, 6, 7						BRACKET

SPRINTER (VB)

SERIES	LINE	BODY	ENGINE	TRANSMISSION
L = LOWLINE	3 = HD DODGE 2WD 2 = Med. Duty DODGE 2WD	03 = CAB CHASSIS WHEEL BASE 3 05 = CAB CHASSIS WHEEL BASE 5 13 = 119 WB 53 = 119 WB 15 = VAN WHEEL BASE 5 55 = WAGON WHEEL BASE 5 17 = VAN WHEEL BASE 7	EG2 = 3.5L V6 Gas Engine EXM = 3.0L V6 Turbo Diesel Engine	DGZ = 5-Speed Auto W5A380 Transmission

Brake Lines
Figure 5-520

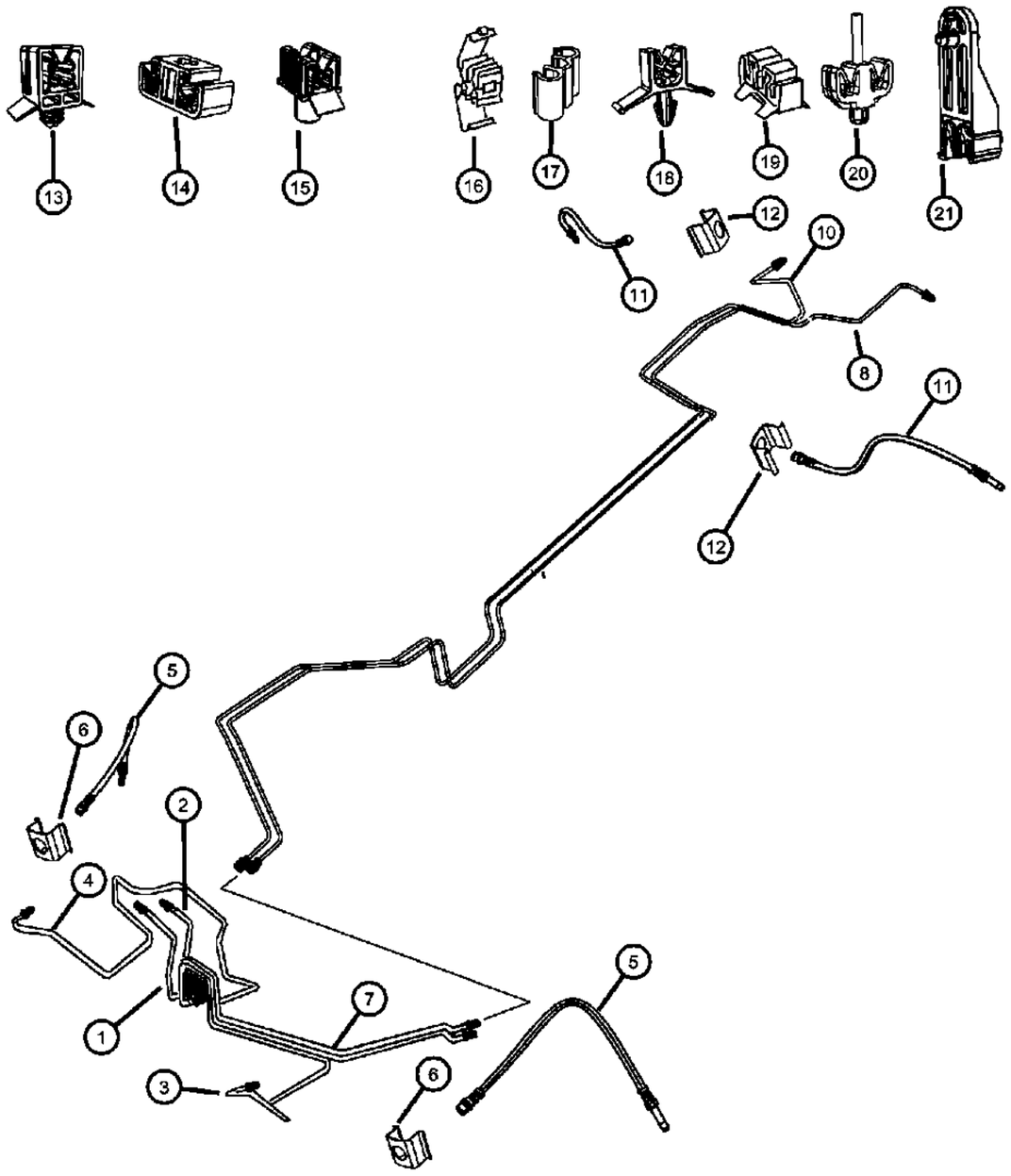

ITEM	PART NUMBER	QTY	LINE	SERIES	BODY	ENGINE	TRANS	TRIM	DESCRIPTION
NOTE:BRAKE LINES ARE TO BE ADAPTED OR MODIFIED TO FIT. BRAKE LINE FITTINGS NOT SERVICED, MUST ORDER BRAKE LINE.									
1	68013575AA	1	2, 3, 6, 7						TUBE, Brake, Master Cylinder To Hydraulic Unit Connection [HZ2] / See Note
2	68013579AA	1	2, 3, 6, 7						TUBE, Brake, Master Cylinder To Hydraulic Unit Connection [HZ1] / See Note
3	05133717AA	1	2, 3, 6, 7						TUBE, Brake, Hydraulic Unit [VL] To Hose Bracket [4.75x0.7x1590 MM] / See Note, Left
4	05136111AA	1	2, 3, 6, 7						TUBE, Brake, Hydraulic Assembly To Hose [RF] / See Note, Right
5	68013581AA	2	2, 3, 6, 7						HOSE, Brake, Brake Hose, Right & Left
6	05098140AA	2	2, 3, 6, 7		13, 15, 17, 53, 55				CLIP, Spring, Brake Hose To Bracket
7	05133712AA	2	2, 3, 6, 7						TUBE, Brake, [HL] Hydraulic Unit To Separation Point [4.75x0.7x1395 MM] / See Note, Right & Left, Front
8	04862640AA	1	3, 7		13, 53				TUBE, Brake
-9	05125769AA	1	3, 7						NUT, Brake Line End Nut
10	68013620AA	1	7, 3		15, 17, 55				TUBE, Brake, From Separation Point To Right Rear Axle / See Note, Right
11	68013583AA	2	3, 7						HOSE, BrakeRight & Left
12	05098140AA	2	2, 3, 6, 7		13, 15, 17, 53, 55				CLIP, Spring, Brake Hose To Bracket
13	68011037AA	1	2, 3, 6, 7		13, 15, 17, 53, 55				RETAINER, Brake Line Holder
14	68013615AA	1	2, 3, 6, 7						RETAINER, Brake Line Holder
15	68011033AA	1	2, 3, 6, 7						RETAINER, Brake Line Holder
16	68013611AA	1	2, 3, 6, 7						CLAMP, Brake
17	05119689AA	1	2, 3, 6, 7		13, 15, 17, 53, 55				CLIP, Brake Line, Brake Line Holder
18	05119329AA	4	2, 3, 6, 7		13, 15, 17, 53, 55				CLIP, Brake Line
19	68013612AA	3	2, 3, 6, 7						RETAINER
20	68013613AA	3	2, 3, 6, 7						RETAINER
21	68013614AA	4	2, 3, 6, 7						BRACKET

SPRINTER (VB)

SERIES	LINE	BODY	ENGINE	TRANSMISSION
L = LOWLINE	3 = HD DODGE 2WD 2 = Med. Duty DODGE 2WD	03 = CAB CHASSIS WHEEL BASE 3 05 = CAB CHASSIS WHEEL BASE 5 13 = 119 WB 53 = 119 WB 15 = VAN WHEEL BASE 5 55 = WAGON WHEEL BASE 5 17 = VAN WHEEL BASE 7	EG2 = 3.5L V6 Gas Engine EXM = 3.0L V6 Turbo Diesel Engine	DGZ = 5-Speed Auto W5A380 Transmission

Brake Lines
Figure 5-530

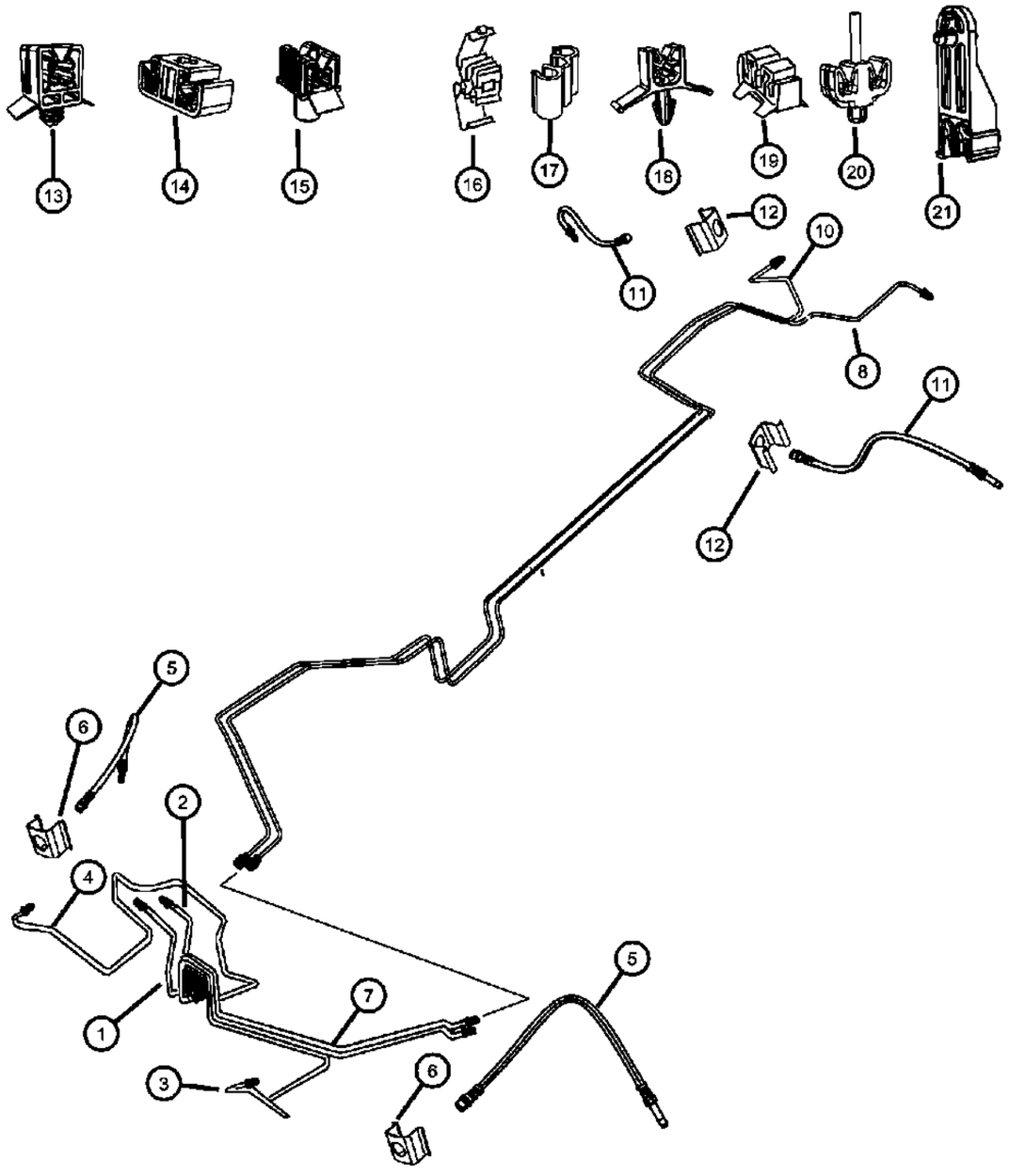

ITEM	PART NUMBER	QTY	LINE	SERIES	BODY	ENGINE	TRANS	TRIM	DESCRIPTION
NOTE:BRAKE LINES ARE TO BE ADAPTED OR MODIFIED TO FIT. BRAKE LINE FITTINGS NOT SERVICED, MUST ORDER BRAKE LINE.									
1	68013575AA	1	2, 3, 6, 7						TUBE, Brake, Master Cylinder To Hydraulic Unit Connection [HZ2] / See Note
2	68013579AA	1	2, 3, 6, 7						TUBE, Brake, Master Cylinder To Hydraulic Unit Connection [HZ1] / See Note
3	05133717AA	1	2, 3, 6, 7						TUBE, Brake, Hydraulic Unit [VL] To Hose Bracket [4.75x0.7x1590 MM] / See Note, Left
4	05136111AA	1	2, 3, 6, 7						TUBE, Brake, Hydraulic Assembly To Hose [RF] / See Note, Right
5	68013581AA	2	2, 3, 6, 7						HOSE, Brake, Brake Hose, Right & Left
6	05098140AA	2	3, 7		03, 05				CLIP, Spring, Brake Hose To Bracket
7	05133712AA	2	2, 3, 6, 7						TUBE, Brake, [HL] Hydraulic Unit To Separation Point [4.75x0.7x1395 MM] / See Note, Right & Left, Front
8									TUBE, Brake
	68013607AA	1	3, 7		03				Separation Point To Left Rear Axle, Left
	68013608AA	1	3, 7		05				Separation Point To Left Rear Axle, Left
-9	05125769AA	1	3, 7						NUT, Brake Line End Nut
10									TUBE, Brake
	05133729AA	1	3, 7		03				Separation Point To Rear Axle, Right
	05133731AA	1	3, 7		05				Separation Point To Rear Axle, Right
11	68013583AA	2	3, 7						HOSE, BrakeRight & Left
12	68011037AA	1	3, 7		03, 05				RETAINER, Brake Line Holder
13	68013615AA	1	2, 3, 6, 7						RETAINER, Brake Line Holder
14	68013615AA	1	2, 3, 6, 7						RETAINER, Brake Line Holder
15	68011033AA	1	7, 2, 3, 6						RETAINER, Brake Line Holder
16	68013611AA	1	2, 3, 6, 7						CLAMP, Brake
17	05119329AA	4	3, 7		03, 05				CLIP, Brake Line, Brake Line Holder
18	68013612AA	3	2, 3, 6, 7						RETAINER, Brake Line Holder
19	68013612AA	3	2, 3, 6, 7						RETAINER

SPRINTER (VB)

SERIES	LINE	BODY	ENGINE	TRANSMISSION
L = LOWLINE	3 = HD DODGE 2WD 2 = Med. Duty DODGE 2WD	03 = CAB CHASSIS WHEEL BASE 3 05 = CAB CHASSIS WHEEL BASE 5 13 = 119 WB 53 = 119 WB 15 = VAN WHEEL BASE 5 55 = WAGON WHEEL BASE 5 17 = VAN WHEEL BASE 7	EG2 = 3.5L V6 Gas Engine EXM = 3.0L V6 Turbo Diesel Engine	DGZ = 5-Speed Auto W5A380 Transmission

Brake Lines
Figure 5-530

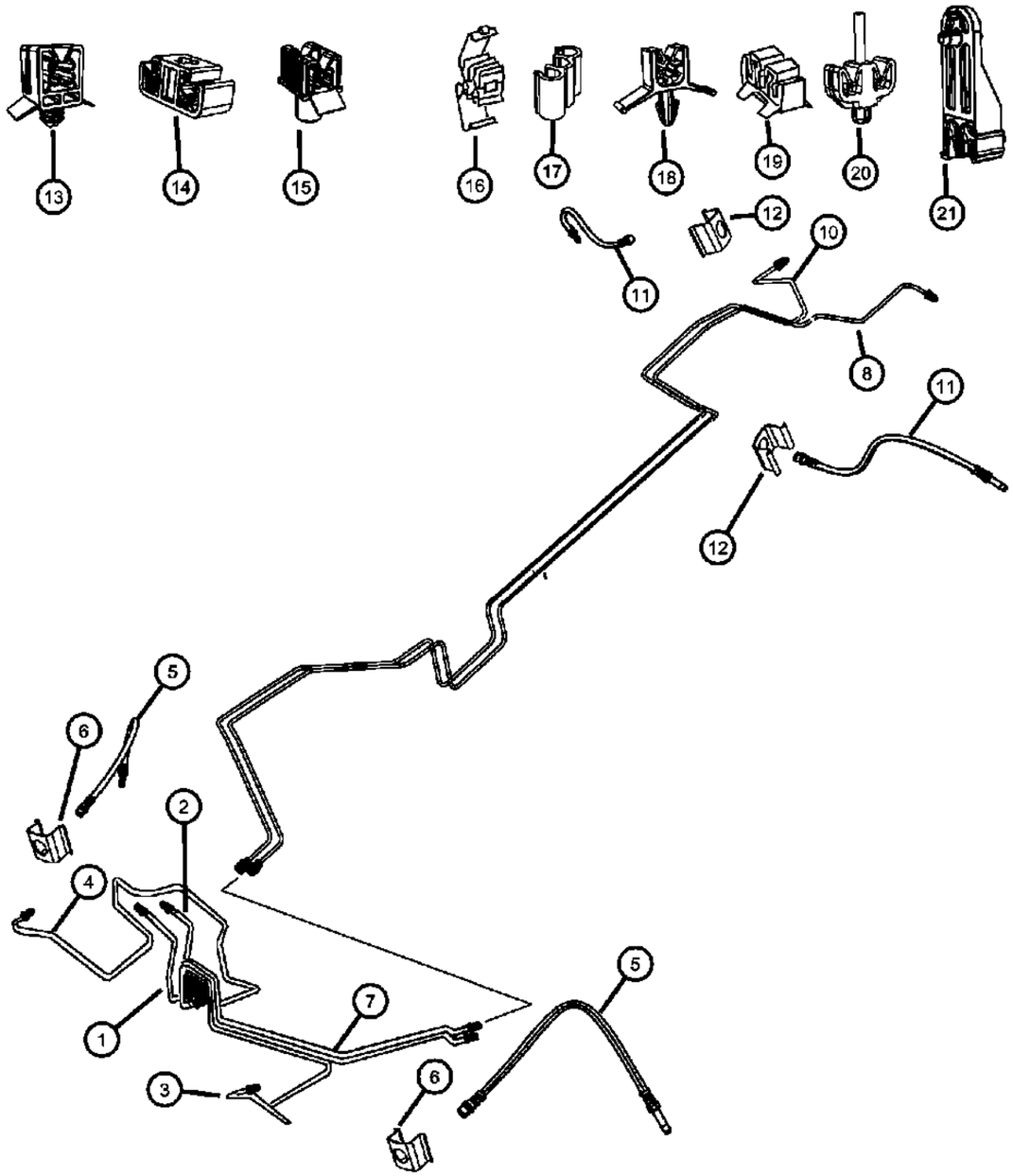

ITEM	PART NUMBER	QTY	LINE	SERIES	BODY	ENGINE	TRANS	TRIM	DESCRIPTION
20	68013613AA	3	2, 3, 6, 7						RETAINER
21	68013614AA	4	2, 3, 6, 7						BRACKET

SPRINTER (VB)

SERIES	LINE	BODY	ENGINE	TRANSMISSION
L = LOWLINE	3 = HD DODGE 2WD 2 = Med. Duty DODGE 2WD	03 = CAB CHASSIS WHEEL BASE 3 05 = CAB CHASSIS WHEEL BASE 5 13 = 119 WB 53 = 119 WB 15 = VAN WHEEL BASE 5 55 = WAGON WHEEL BASE 5 17 = VAN WHEEL BASE 7	EG2 = 3.5L V6 Gas Engine EXM = 3.0L V6 Turbo Diesel Engine	DGZ = 5-Speed Auto W5A380 Transmission

AR = use ase required - = Non illustrrated part

<< RETURN TO GROUP INDEX

Brake Pedal
Figure 5-610

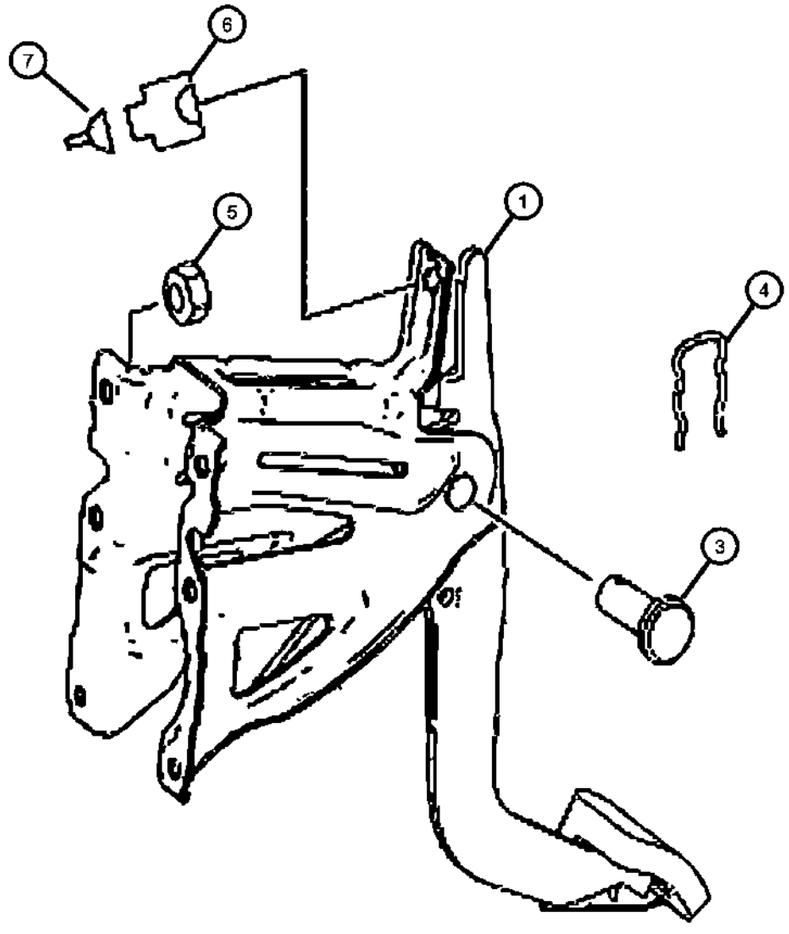

ITEM	PART NUMBER	QTY	LINE	SERIES	BODY	ENGINE	TRANS	TRIM	DESCRIPTION
1	68013455AA	1	2, 3, 6, 7						PEDAL, Brake, Includes Mounting Braket / See Note
2	68013459AA	1	2, 3, 6, 7						PIN, Brake Pedal Pivot Shaft
3	05097670AA	1	2, 3, 6, 7						CLIP, Spring
4	06105169AA	6	2, 3, 6, 7						NUT
5	68011261AA	1	2, 3, 6, 7						CONNECTOR, Stop Light Switch Connectop [S 9/1]
6	05103892AA	1	2, 3, 6, 7						TERMINAL, Terminal Stop Light Switch [0.5/1.0 MM2 MCP: S 9/1]
7	68013457AA	1	2, 3, 6, 7						PAD, Pedal
8	68013458AA	1	2, 3, 6, 7						SPRING

SPRINTER (VB)

SERIES	LINE	BODY	ENGINE	TRANSMISSION
L = LOWLINE	3 = HD DODGE 2WD 2 = Med. Duty DODGE 2WD	03 = CAB CHASSIS WHEEL BASE 3 05 = CAB CHASSIS WHEEL BASE 5 13 = 119 WB 53 = 119 WB 15 = VAN WHEEL BASE 5 55 = WAGON WHEEL BASE 5 17 = VAN WHEEL BASE 7	EG2 = 3.5L V6 Gas Engine EXM = 3.0L V6 Turbo Diesel Engine	DGZ = 5-Speed Auto W5A380 Transmission

Group - 7

Cooling

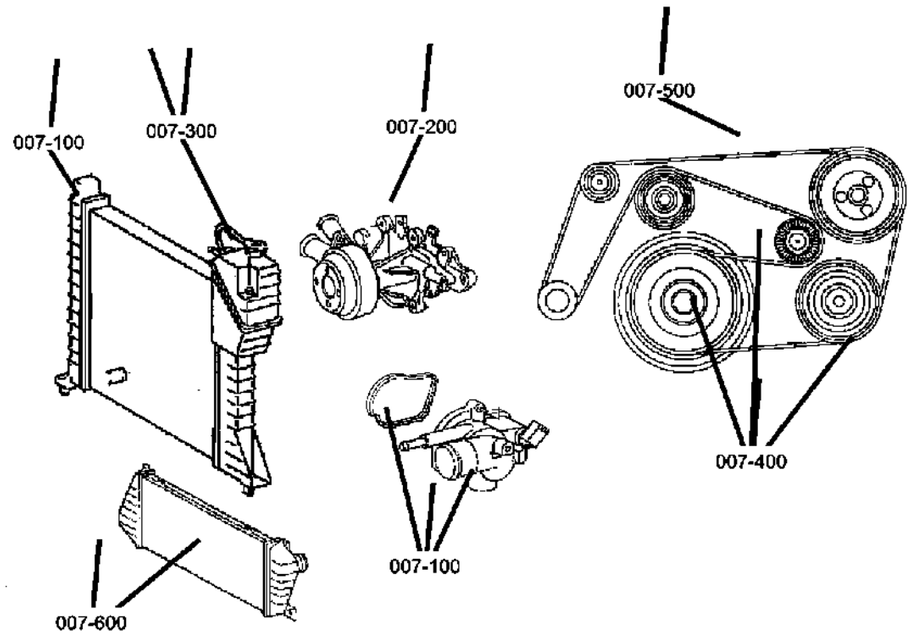

007-100 Radiator and Related Parts	**007-200** Water Pump and Related Parts	**007-300** Tank, Coolant Engine	**007-400** Pulleys and Related Parts
007-500 Drive Belts	**007-600** Lines, Transmission Oil Cooler	**007-700** Grilles	

Group - 7 Cooling

Illustration Title — Group-Fig. No.

Radiator and Related Parts
Radiator & Related Parts ..... Fig. 7 - 110
Fan & Fan Clutch ..... Fig. 7 - 115
Intercooler ..... Fig. 7 - 120

Water Pump and Related Parts
Water Pump ..... Fig. 7 - 210
Water Pump ..... Fig. 7 - 220

Tank, Coolant Engine
Tank & Hoses [EXM] ..... Fig. 7 - 310
Tank & Hoses [EG2] ..... Fig. 7 - 330

Pulleys and Related Parts
Belt Tensioner & Pulleys ..... Fig. 7 - 410
Belt Tensioner & Pulleys ..... Fig. 7 - 420

Drive Belts
Accessory Belts ..... Fig. 7 - 510

Lines, Transmission Oil Cooler
Transmission Cooling ..... Fig. 7 - 610

Grilles
Front Grille ..... Fig. 7 - 710

Radiator & Related Parts
Figure 7-110

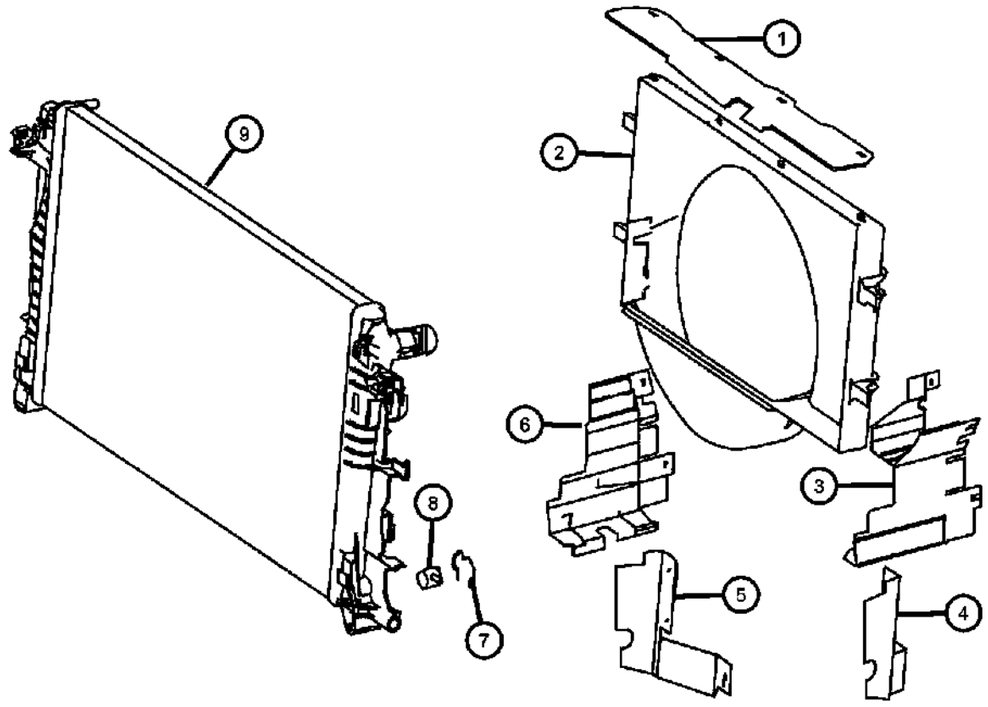

ITEM	PART NUMBER	QTY	LINE	SERIES	BODY	ENGINE	TRANS	TRIM	DESCRIPTION
1									COVER, Radiator
	68013660AA	1	3, 7			EG2, EXM	DGZ		Top
		1	2, 3, 6, 7			EG2, EXM	DGZ		Top
2									SHROUD, Fan
	68013658AA	1	2, 3, 6, 7			EXM	DGZ		
	68013659AA	1	2, 3, 6, 7			EG2	DGZ		
3	68004913AA	1	2, 3, 6, 7			EG2, EXM	DGZ		SHIELD, Side, Radiator CoolingLeft
4									COVER, Radiator
	68004917AA	1	3, 7			EXM	DGZ		Lower Left Hand
		1	2, 3, 6, 7			EXM	DGZ		Lower Left Hand
5									COVER, Radiator
	68004916AA	1	3, 7			EXM	DGZ		Lower Right Hand
		1	2, 3, 6, 7			EXM	DGZ		Lower Right Hand
6	68004914AA	1	2, 3, 6, 7			EG2, EXM	DGZ		SHIELD, Side, Radiator CoolingRight
7	68004816AA	1	2, 3, 6, 7			EG2, EXM	DGZ		CLAMP
8	68013632AA	1	2, 3, 6, 7			EG2, EXM	DGZ		DRAINCOCK, Radiator
9	68013630AA	1	2, 3, 6, 7			EG2, EXM	DGZ		RADIATOR

SPRINTER (VB)

SERIES	LINE	BODY	ENGINE	TRANSMISSION
L = LOWLINE	3 = HD DODGE 2WD 2 = Med. Duty DODGE 2WD	03 = CAB CHASSIS WHEEL BASE 3 05 = CAB CHASSIS WHEEL BASE 5 13 = 119 WB 53 = 119 WB 15 = VAN WHEEL BASE 5 55 = WAGON WHEEL BASE 5 17 = VAN WHEEL BASE 7	EG2 = 3.5L V6 Gas Engine EXM = 3.0L V6 Turbo Diesel Engine	DGZ = 5-Speed Auto W5A380 Transmission

Fan & Fan Clutch
Figure 7-115

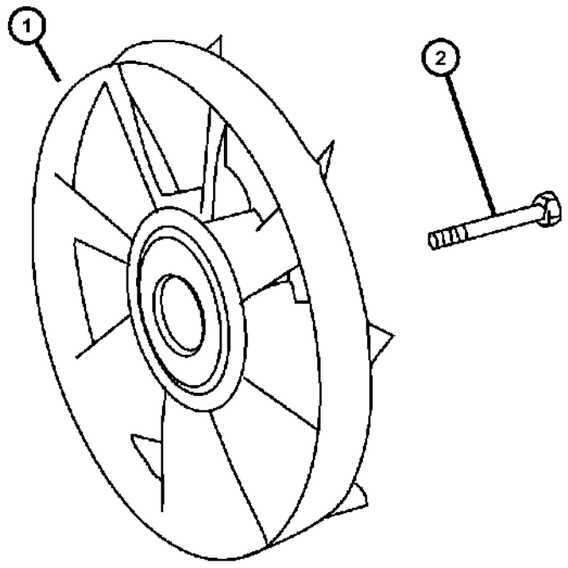

ITEM	PART NUMBER	QTY	LINE	SERIES	BODY	ENGINE	TRANS	TRIM	DESCRIPTION
1									FAN, Cooling
	68012412AA	1	2, 3, 6, 7			EXM	DGZ		VISCOUS FAN
	68012413AA	1	2, 3, 6, 7			EG2	DGZ		VISCOUS FAN
2	05126141AA	1	2, 3, 6, 7			EG2, EXM	DGZ		SCREW, Fan To Water Pump

SPRINTER (VB)

SERIES	LINE	BODY	ENGINE	TRANSMISSION
L = LOWLINE	3 = HD DODGE 2WD 2 = Med. Duty DODGE 2WD	03 = CAB CHASSIS WHEEL BASE 3 05 = CAB CHASSIS WHEEL BASE 5 13 = 119 WB 53 = 119 WB 15 = VAN WHEEL BASE 5 55 = WAGON WHEEL BASE 5 17 = VAN WHEEL BASE 7	EG2 = 3.5L V6 Gas Engine EXM = 3.0L V6 Turbo Diesel Engine	DGZ = 5-Speed Auto W5A380 Transmission

Intercooler
Figure 7-120

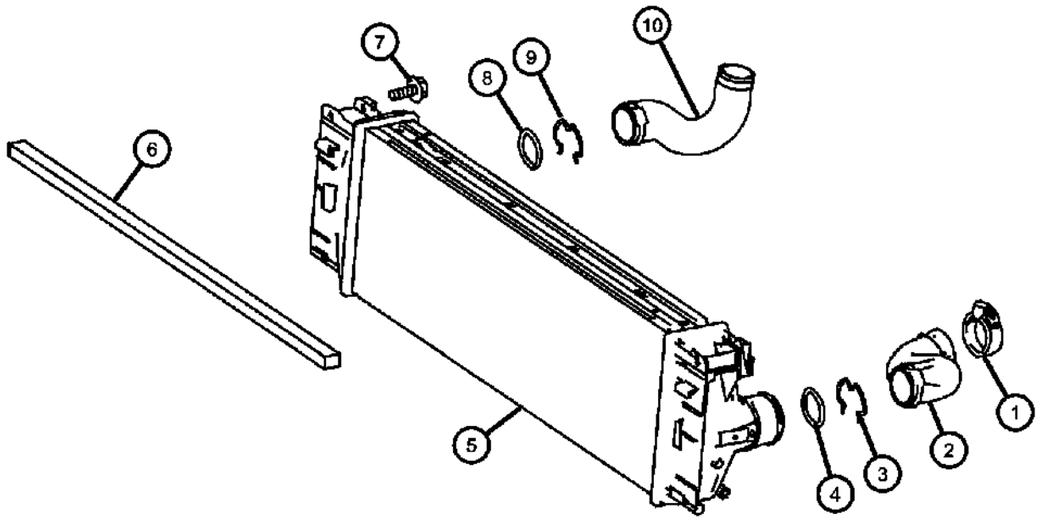

ITEM	PART NUMBER	QTY	LINE	SERIES	BODY	ENGINE	TRANS	TRIM	DESCRIPTION
1	06104788AA	1	2, 3, 6, 7			EXM	DGZ		CLAMP, Hose
2	68013655AA	1	2, 3, 6, 7			EXM	DGZ		HOSE, Charge Air CoolerRight
3	68013654AA	1	2, 3, 6, 7			EXM	DGZ		SPRING
4									SEAL, Charge Air Cooler Hose
	68013653AA	1	3, 7			EXM	DGZ		
		1	2, 3, 6, 7			EXM	DGZ		
5	68013636AA	1	2, 3, 6, 7			EXM	DGZ		INTERCOOLER
6									COVER, Radiator
	68004897AA	1	3, 7			EXM	DGZ		
		1	2, 3, 6, 7			EXM	DGZ		
7	06104014AA	2	3, 7			EXM	DGZ		SCREW
8									SEAL, Charge Air Cooler Hose
	68013653AA	1	3, 7			EXM	DGZ		
		1	2, 3, 6, 7			EXM	DGZ		
9	68013654AA	1	2, 3, 6, 7			EXM	DGZ		SPRING
10	68013652AA	1	2, 3, 6, 7			EXM	DGZ		HOSE, Turbo to Charge Air Cooler, Bottom

SPRINTER (VB)

SERIES	LINE	BODY	ENGINE	TRANSMISSION
L = LOWLINE	3 = HD DODGE 2WD 2 = Med. Duty DODGE 2WD	03 = CAB CHASSIS WHEEL BASE 3 05 = CAB CHASSIS WHEEL BASE 5 13 = 119 WB 53 = 119 WB 15 = VAN WHEEL BASE 5 55 = WAGON WHEEL BASE 5 17 = VAN WHEEL BASE 7	EG2 = 3.5L V6 Gas Engine EXM = 3.0L V6 Turbo Diesel Engine	DGZ = 5-Speed Auto W5A380 Transmission

Water Pump
Figure 7-210

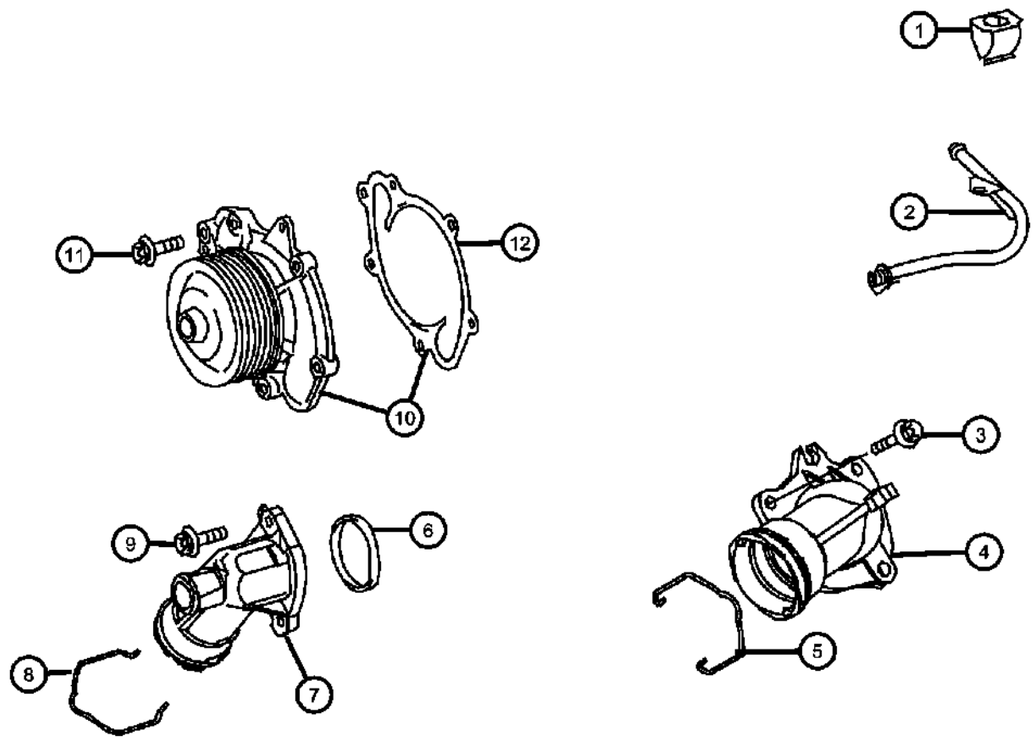

ITEM	PART NUMBER	QTY	LINE	SERIES	BODY	ENGINE	TRANS	TRIM	DESCRIPTION
1	68014052AA	1	2, 3, 6, 7			EXM	DGZ		CLAMP
2	68014047AA	1	2, 3, 6, 7			EXM	DGZ		HOSE
3	06104004AA	1	2, 3, 6, 7			EXM	DGZ		BOLT, Thermostat to Fitting M6x12
4	68014045AA	1	2, 3, 6, 7			EXM	DGZ		THERMOSTAT, Heated
5									CLIP, CLIP-SPRING
	05175821AA	1	3, 7			EG2, EXM	DGZ		26,84
		1	2, 3, 6, 7			EXM	DGZ		26,84
		1	7, 3			EXM	DGZ		26,84
6	05175584AA	1	2, 3, 6, 7			EXM	DGZ		GASKET, Thermostat, Pipe Socket to Cylinder Crankcase
7	68014141AA	1	2, 3, 6, 7			EXM	DGZ		HOUSING, Thermostat
8									CLIP, CLIP-SPRING
	05175821AA	1	3, 7			EG2, EXM	DGZ		26,84
		1	2, 3, 6, 7			EXM	DGZ		26,84
		1	3, 7			EXM	DGZ		26,84
9	06104006AA	2	2, 3, 6, 7			EXM	DGZ		BOLT, Pipe Socket to Cylinder Crankcase M6x20
10	05175580AA	1	2, 3, 6, 7			EXM	DGZ		PUMP, Water, Parts Kit
11	05175582AA	6	2, 3, 6, 7			EXM	DGZ		SCREW, M6x25-8.8MK
12	05175581AA	1	2, 3, 6, 7			EXM	DGZ		GASKET, Water Pump

SPRINTER (VB)

SERIES	LINE	BODY	ENGINE	TRANSMISSION
L = LOWLINE	3 = HD DODGE 2WD 2 = Med. Duty DODGE 2WD	03 = CAB CHASSIS WHEEL BASE 3 05 = CAB CHASSIS WHEEL BASE 5 13 = 119 WB 53 = 119 WB 15 = VAN WHEEL BASE 5 55 = WAGON WHEEL BASE 5 17 = VAN WHEEL BASE 7	EG2 = 3.5L V6 Gas Engine EXM = 3.0L V6 Turbo Diesel Engine	DGZ = 5-Speed Auto W5A380 Transmission

Water Pump
Figure 7-220

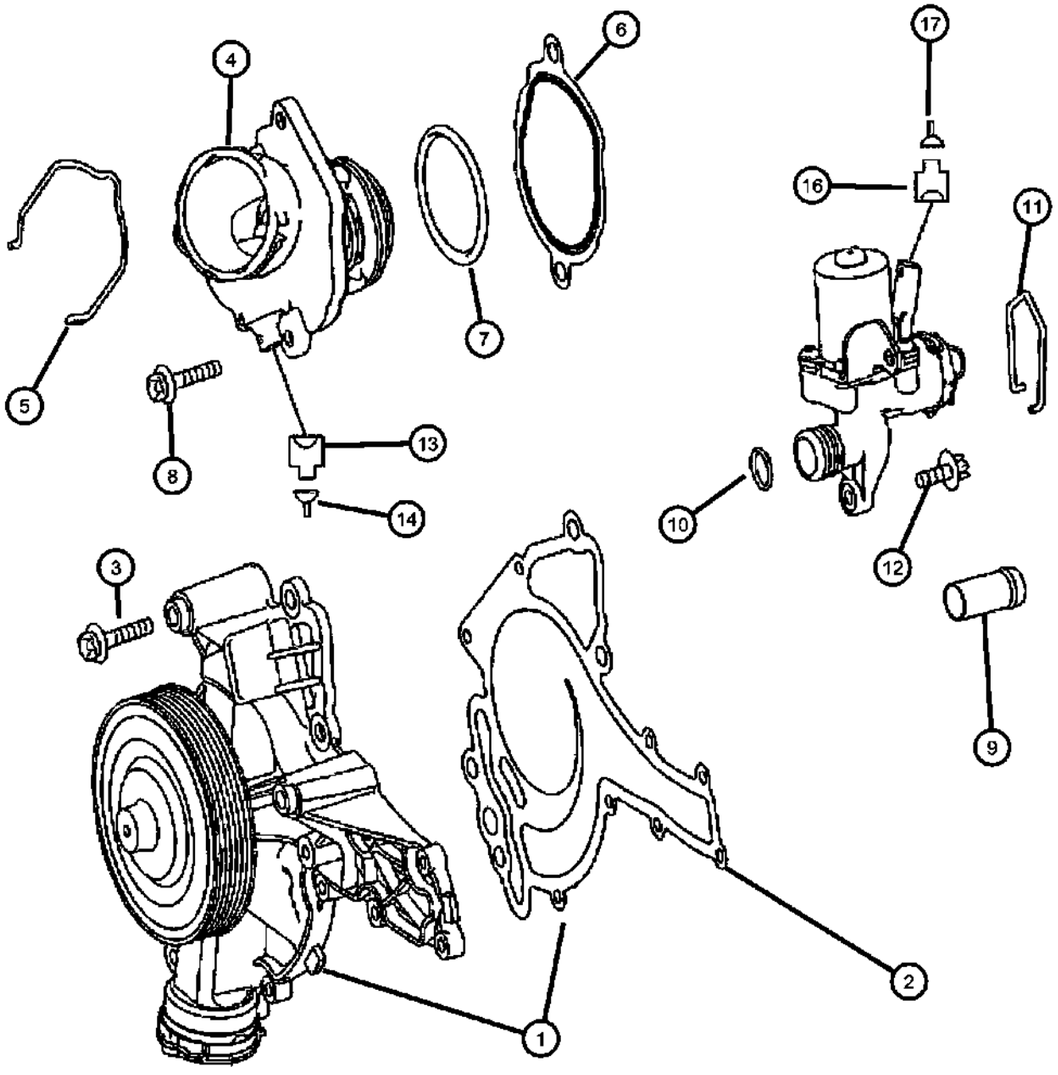

ITEM	PART NUMBER	QTY	LINE	SERIES	BODY	ENGINE	TRANS	TRIM	DESCRIPTION
1	68013932AA	1	2, 3, 6, 7			EG2	DGZ		PUMP, Water, Includes Gasket
2	68013945AA	1	2, 3, 6, 7			EG2	DGZ		GASKET, Water Pump, Also Included With Water Pump
3									SCREW
	05073898AA	8	2, 3, 6, 7			EG2	DGZ		Water Pump To Timing Case
	06104037AB	1	2, 3, 6, 7			EG2	DGZ		[M8x110] Water Pump To Timing Case
	68013947AA	3	2, 3, 6, 7			EG2	DGZ		[M8x75] Water Pump To Timing Case
4	68013949AA	1	2, 3, 6, 7			EG2	DGZ		THERMOSTAT
5	68013641AA	1	2, 3, 6, 7			EG2	DGZ		SPRING
6	68013950AA	1	2, 3, 6, 7			EG2	DGZ		GASKET, Water Pump
7	68013951AA	1	7, 2, 3, 6			EG2	DGZ		O-RING
8	05073898AA	2	2, 3, 6, 7			EG2	DGZ		SCREW
9	68013953AA	1	2, 3, 6, 7			EG2	DGZ		FITTING
10	68013954AA	2	2, 3, 6, 7			EG2	DGZ		O RING
11	68013955AA	1	2, 3, 6, 7			EG2	DGZ		SPRING
12	06104142AA	2	2, 3, 6, 7			EG2	DGZ		SCREW
13	68011798AA	1	2, 3, 6, 7			EG2	DGZ		CONNECTOR, [Y110] Connector
14									TERMINAL
	68011877AA	AR	2, 3, 6, 7			EG2	DGZ		Thermostat
	68011878AA	AR	2, 3, 6, 7			EG2	DGZ		[Y110] Connector
-15	68011050AA	AR	2, 3, 6, 7			EG2	DGZ		GASKET, Thermostat Connector
16	68011798AA	1	2, 3, 6, 7			EG2	DGZ		CONNECTOR, [Y12/2] Connector
17									TERMINAL
	68011877AA	AR	2, 3, 6, 7			EG2	DGZ		Therminal
	68011878AA	AR	2, 3, 6, 7			EG2	DGZ		[Y16/2] Connector
-18	68011050AA	AR	2, 3, 6, 7			EG2	DGZ		GASKET

SPRINTER (VB)

SERIES	LINE	BODY	ENGINE	TRANSMISSION
L = LOWLINE	3 = HD DODGE 2WD 2 = Med. Duty DODGE 2WD	03 = CAB CHASSIS WHEEL BASE 3 05 = CAB CHASSIS WHEEL BASE 5 13 = 119 WB 53 = 119 WB 15 = VAN WHEEL BASE 5 55 = WAGON WHEEL BASE 5 17 = VAN WHEEL BASE 7	EG2 = 3.5L V6 Gas Engine EXM = 3.0L V6 Turbo Diesel Engine	DGZ = 5-Speed Auto W5A380 Transmission

AR = use ase required - = Non illustrrated part

Tank & Hoses [EXM]
Figure 7-310

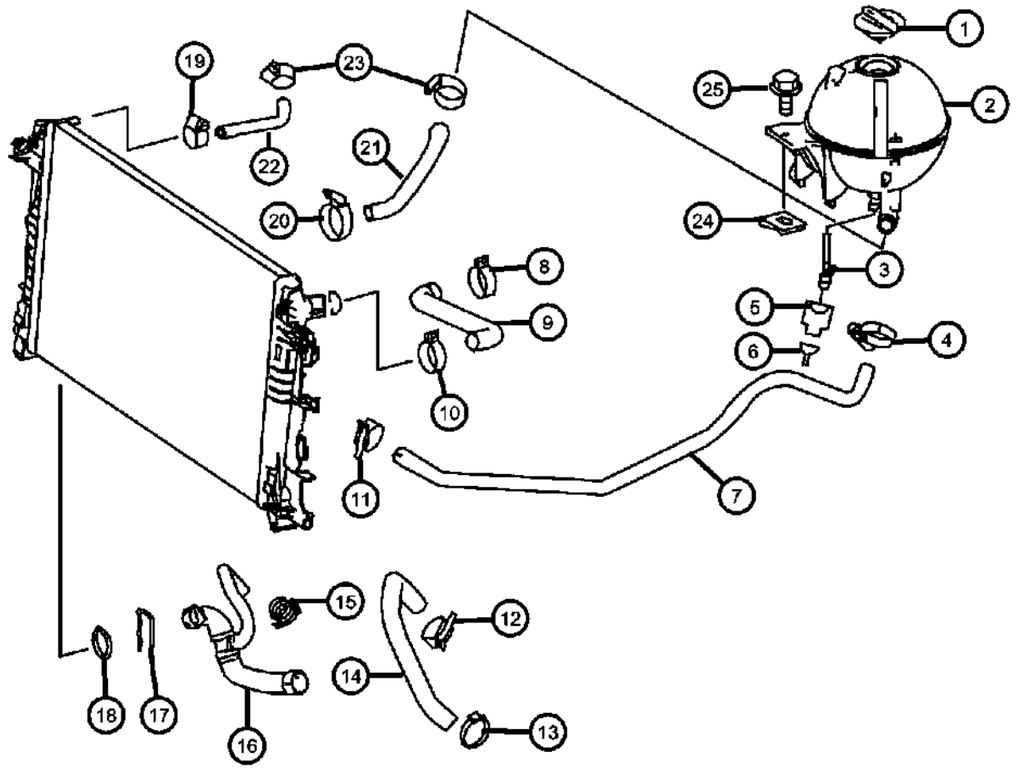

ITEM	PART NUMBER	QTY	LINE	SERIES	BODY	ENGINE	TRANS	TRIM	DESCRIPTION
1	68004911AA	1	2, 3, 6, 7			EG2, EXM	DGZ		CAP, Coolant Recovery Bottle
2	68004910AA	1	2, 3, 6, 7			EXM	DGZ		BOTTLE, Coolant Recovery
3	68013657AA	1	2, 3, 6, 7			EG2, EXM	DGZ		SENSOR, Coolant Level
4	68013657AA	1							CLAMP, (NOT SERVICED)
5	05120273AA	1	2, 3, 6, 7			EG2, EXM	DGZ		HOUSING, Coolant Level 2-Pin,S41
6	05103874AA	1	2, 3, 6, 7			EG2, EXM	DGZ		TERMINAL, 0.75MM2,MQA,S41
7	68013651AA	1	2, 3, 6, 7			EXM	DGZ		HOSE, Engine Breathing
8									CLAMP, HOSE CLAMP
	06105105AA	1	3, 7			EXM	DGZ		Hose to Thermostat
		1	2, 3, 6, 7			EXM	DGZ		Hose to Thermostat
9	68013638AA	1	2, 3, 6, 7			EXM	DGZ		HOSE, RadiatorUpper
10	68013642AA	1	2, 3, 6, 7			EG2, EXM	DGZ		CLAMP, Hose to Radiator
11									CLAMP
	05133496AA	1	3, 7			EXM	DGZ		Fluid Reservoir Breather Hose 14-24/8.3MM
		1	2, 3, 6, 7			EXM	DGZ		Fluid Reservoir Breather Hose 14-24/8.3MM
12									CLAMP, HOSE CLAMP
	06104813AA	1	3, 7			EG2, EXM	DGZ		Heating By Cooling Water 32/12MM
		1	2, 3, 6, 7			EG2, EXM	DGZ		Heating By Cooling Water 32/12MM
13									CLAMP, HOSE CLAMP
	06105105AA	1	3, 7			EXM	DGZ		Cooling Water Hose to Water Pump
		1	2, 3, 6, 7			EXM	DGZ		Cooling Water Hose to Water Pump
14	68013649AA	1	2, 3, 6, 7			EXM	DGZ		HOSE, Bottom
15	06104806AA	1	2, 3, 6, 7			EXM	DGZ		CLAMP, Heating Hose to Heating Pipe, Return 23-26MM
16									HOSE, Radiator
	68013644AA	1	2, 3, 6, 7			EXM	DGZ		With Heavy Duty [A/C]
	68025109AA	1	2, 3, 6, 7			EXM	DGZ		
	68025114AA	1	2, 3, 6, 7			EXM	DGZ		With Dual [A/C] Compressor
17	05175821AA	1	2, 3, 6, 7			EXM	DGZ		CLIP, CLIP-SPRING, 26,84
18	68013648AA	1	2, 3, 6, 7			EXM	DGZ		SEAL, 36,3MM

SPRINTER (VB)

SERIES	LINE	BODY	ENGINE	TRANSMISSION
L = LOWLINE	3 = HD DODGE 2WD 2 = Med. Duty DODGE 2WD	03 = CAB CHASSIS WHEEL BASE 3 05 = CAB CHASSIS WHEEL BASE 5 13 = 119 WB 53 = 119 WB 15 = VAN WHEEL BASE 5 55 = WAGON WHEEL BASE 5 17 = VAN WHEEL BASE 7	EG2 = 3.5L V6 Gas Engine EXM = 3.0L V6 Turbo Diesel Engine	DGZ = 5-Speed Auto W5A380 Transmission

Tank & Hoses [EXM]
Figure 7-310

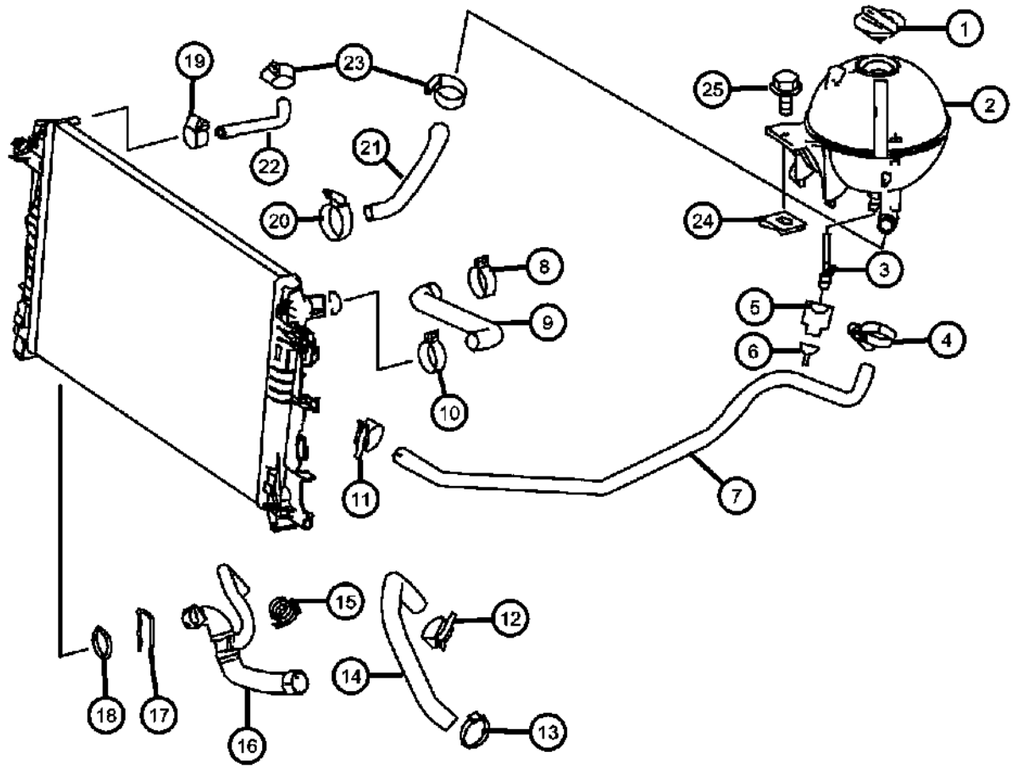

ITEM	PART NUMBER	QTY	LINE	SERIES	BODY	ENGINE	TRANS	TRIM	DESCRIPTION
19	68004905AA	1	2, 3, 6, 7			EXM	DGZ		CLAMP, Filling Hose to Radiator
20	05133496AA	1	2, 3, 6, 7			EXM	DGZ		CLAMP, Radiator De-Aeration Hose 14-24/8.3MM
21	68004902AA	1	2, 3, 6, 7			EG2, EXM	DGZ		HOSE, Coolant, Heating Hose to Radiator Breathing Hose
22									HOSE, Coolant
	68013650AA	1	3, 7			EG2, EXM	DGZ		Cooling-Water-Line Breathing
		1	2, 3, 6, 7			EG2, EXM	DGZ		Cooling-Water-Line Breathing
23	06104813AA	1	2, 3, 6, 7			EG2, EXM	DGZ		CLAMP, HOSE CLAMP, Filling Hose to Expansion Tank 32/12MM
24									CLIP
	06104748AA	1	3, 7			EG2, EXM	DGZ		Reservoir to Support
		1	2, 3, 6, 7			EG2, EXM	DGZ		Reservoir to Support
25									SCREW
	05161856AB	1	3, 7			EG2, EXM	DGZ		Reservoir to Support M6x20
		1	2, 3, 6, 7			EG2, EXM	DGZ		Reservoir to Support M6x20
-26	68012406AA	1	2, 3, 6, 7			EG2	DGZ		MANIFOLD
-27	06104687AA	1	2, 3, 6, 7			EG2, EXM	DGZ		SCREW, M6x43

SPRINTER (VB)

SERIES	LINE	BODY	ENGINE	TRANSMISSION
L = LOWLINE	3 = HD DODGE 2WD 2 = Med. Duty DODGE 2WD	03 = CAB CHASSIS WHEEL BASE 3 05 = CAB CHASSIS WHEEL BASE 5 13 = 119 WB 53 = 119 WB 15 = VAN WHEEL BASE 5 55 = WAGON WHEEL BASE 5 17 = VAN WHEEL BASE 7	EG2 = 3.5L V6 Gas Engine EXM = 3.0L V6 Turbo Diesel Engine	DGZ = 5-Speed Auto W5A380 Transmission

Tank & Hoses [EG2]
Figure 7-330

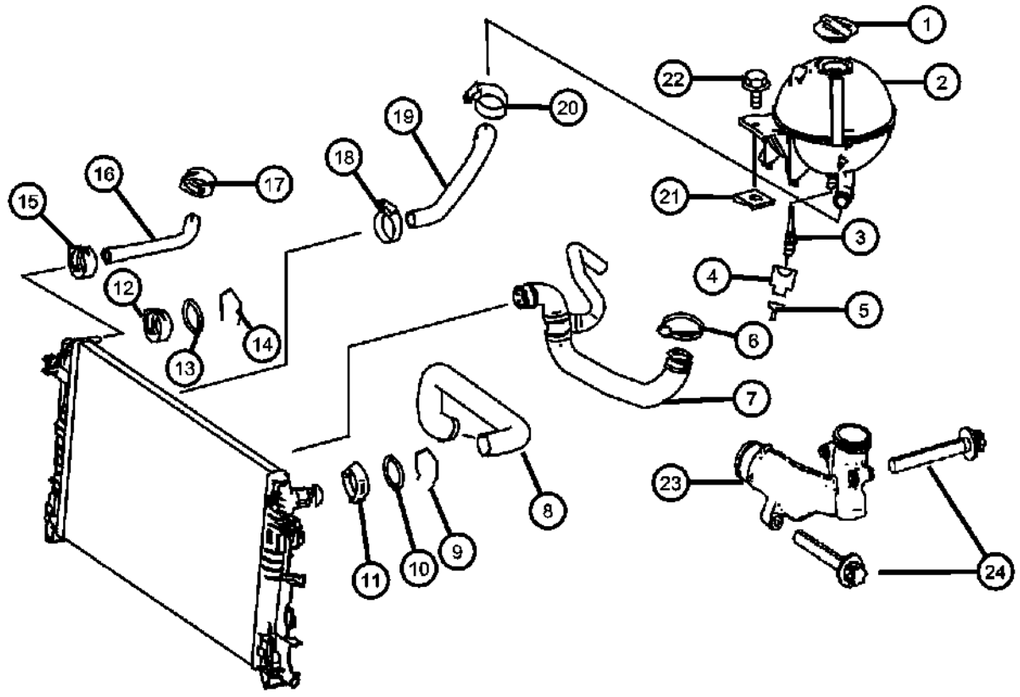

ITEM	PART NUMBER	QTY	LINE	SERIES	BODY	ENGINE	TRANS	TRIM	DESCRIPTION
1	68004911AA	1	2, 3, 6, 7			EG2, EXM	DGZ		CAP, Coolant Recovery Bottle
2	68013656AA	1	2, 3, 6, 7			EG2	DGZ		BOTTLE, Coolant Recovery
3	68013657AA	1	2, 3, 6, 7			EG2, EXM	DGZ		SENSOR, Coolant Level
4	05120273AA	1	2, 3, 6, 7			EG2, EXM	DGZ		HOUSING, Coolant Level 2-PIN,S41
5	05103874AA	1	2, 3, 6, 7			EG2, EXM	DGZ		TERMINAL
6									CLAMP, HOSE CLAMP
	06105105AA	1	3, 7			EG2	DGZ		Cooling Water Hose to Water Pump
		1	2, 6			EG2	DGZ		Cooling Water Hose to Water Pump
7	68013647AA	1	2, 3, 6, 7			EG2	DGZ		HOSE, RadiatorLower
8	68013639AA	1	2, 3, 6, 7			EG2	DGZ		HOSE, RadiatorUpper
9	68013641AA	1	2, 6, 7, 3			EG2	DGZ		SPRING, 27,43MM
10	68013640AA	1	2, 3, 6, 7			EG2	DGZ		SEAL, 36,3MM
11	68013642AA	1	2, 3, 6, 7			EG2, EXM	DGZ		CLAMP, Hose to Radiator
12	06104813AA	1	2, 3, 6, 7			EG2	DGZ		CLAMP, HOSE CLAMP, Heating By Cooling Water 32/12MM
13	68013648AA	1	2, 3, 6, 7			EG2	DGZ		SEAL, 36,3MM
14									CLIP, CLIP-SPRING
	05175821AA	1	3, 7			EG2	DGZ		
		1	2, 6			EG2	DGZ		
15	68004905AA	1	2, 3, 6, 7			EG2, EXM	DGZ		CLAMP, Filling Hose to Radiator
16									HOSE, Coolant
	68013650AA	1	2, 3, 6, 7			EG2, EXM	DGZ		Cooling-Water-Line Breathing
		1	3, 7			EG2, EXM	DGZ		Cooling-Water-Line Breathing
17									CLAMP, HOSE CLAMP
	06104813AA	1	2, 3, 6, 7			EG2	DGZ		Filling Hose to Expansion Tank 32/12MM
		1	2, 6			EG2	DGZ		Filling Hose to Expansion Tank 32/12MM
18	05133494AA	1	2, 3, 6, 7			EG2	DGZ		CLAMP, Radiator De-Aeration Hose 14-24/8.3MM
19	68004902AA	1	2, 3, 6, 7			EG2, EXM	DGZ		HOSE, Coolant, Heating Hose to Radiator Breathing Hose
20	68004902AA	1							CLAMP, (NOT SERVICED)
21									CLIP

SPRINTER (VB)

SERIES	LINE	BODY	ENGINE	TRANSMISSION
L = LOWLINE	3 = HD DODGE 2WD 2 = Med. Duty DODGE 2WD	03 = CAB CHASSIS WHEEL BASE 3 05 = CAB CHASSIS WHEEL BASE 5 13 = 119 WB 53 = 119 WB 15 = VAN WHEEL BASE 5 55 = WAGON WHEEL BASE 5 17 = VAN WHEEL BASE 7	EG2 = 3.5L V6 Gas Engine EXM = 3.0L V6 Turbo Diesel Engine	DGZ = 5-Speed Auto W5A380 Transmission

Tank & Hoses [EG2]
Figure 7-330

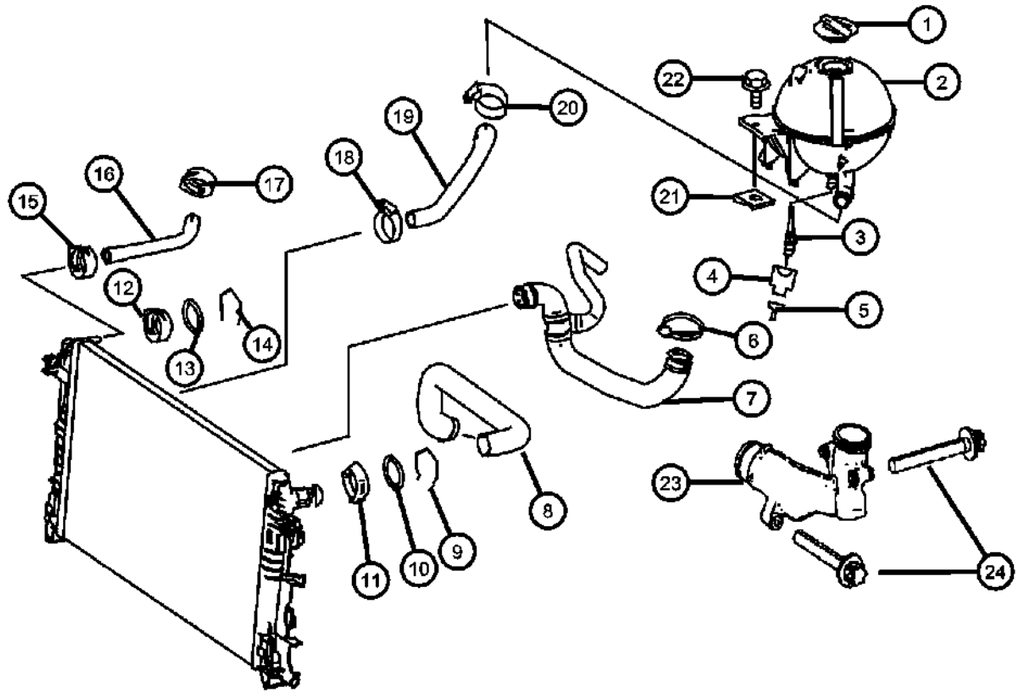

ITEM	PART NUMBER	QTY	LINE	SERIES	BODY	ENGINE	TRANS	TRIM	DESCRIPTION
	06104748AA	1	2, 3, 6, 7			EG2, EXM	DGZ		Reservoir to Support
		1	3, 7			EG2, EXM	DGZ		Reservoir to Support
22	05161856AB	1	2, 3, 6, 7			EG2, EXM	DGZ		SCREW, Reservoir to Support M6x20
23	68012406AA	1	3, 6, 7, 2			EG2	DGZ		MANIFOLD, Water Elbow
24									SCREW
	06104687AA	2	2, 6			EG2	DGZ		[M6x43]
		2	3, 7			EG2	DGZ		[M6x43]

SPRINTER (VB)

SERIES	LINE	BODY	ENGINE	TRANSMISSION
L = LOWLINE	3 = HD DODGE 2WD 2 = Med. Duty DODGE 2WD	03 = CAB CHASSIS WHEEL BASE 3 05 = CAB CHASSIS WHEEL BASE 5 13 = 119 WB 53 = 119 WB 15 = VAN WHEEL BASE 5 55 = WAGON WHEEL BASE 5 17 = VAN WHEEL BASE 7	EG2 = 3.5L V6 Gas Engine EXM = 3.0L V6 Turbo Diesel Engine	DGZ = 5-Speed Auto W5A380 Transmission

Belt Tensioner & Pulleys
Figure 7-410

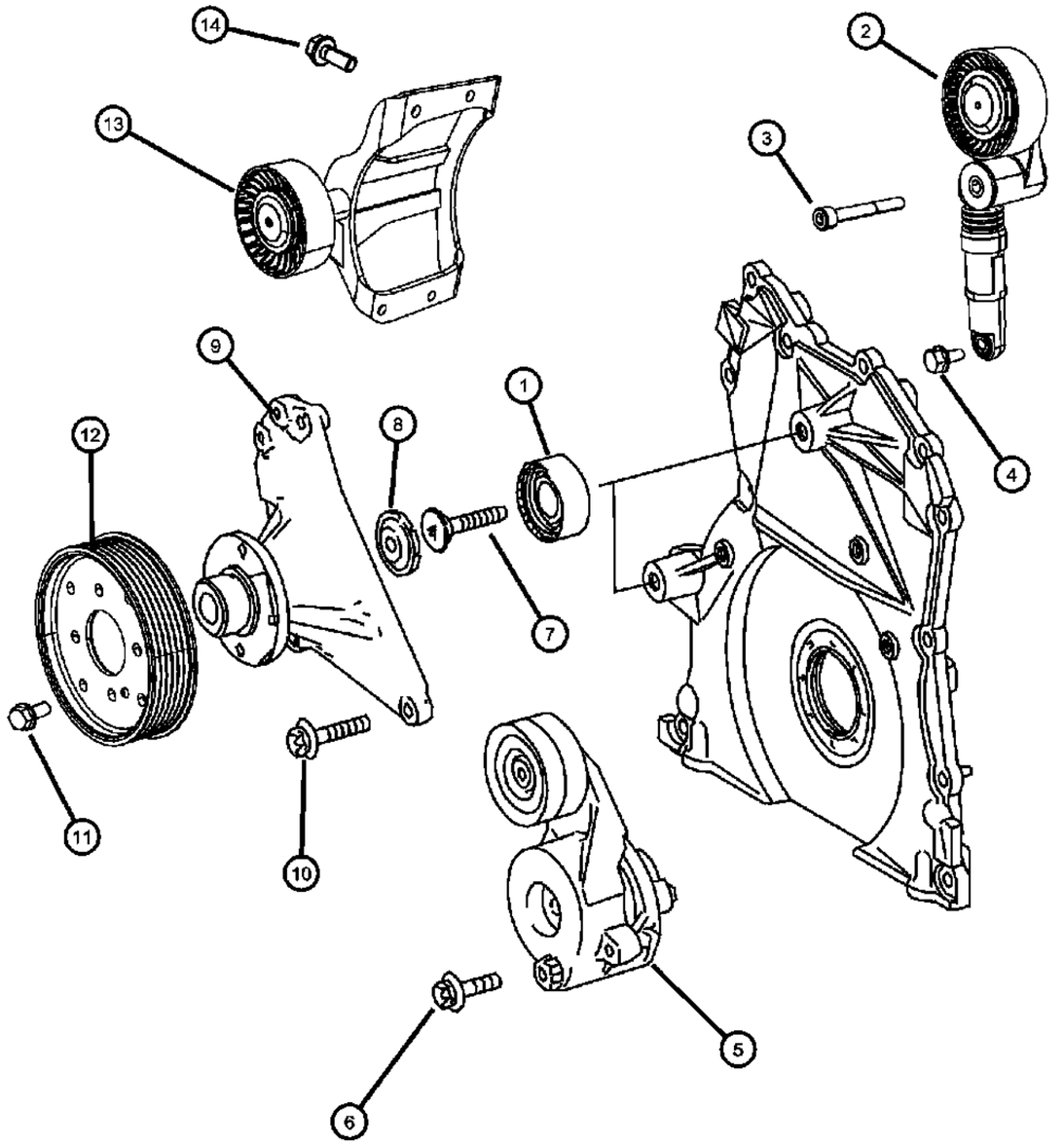

ITEM	PART NUMBER	QTY	LINE	SERIES	BODY	ENGINE	TRANS	TRIM	DESCRIPTION
1	05175589AB	2	2, 3, 6, 7			EXM	DGZ		PULLEY, Idler
2	68021256AA	1	2, 3, 6, 7			EXM	DGZ		PULLEY, Tensioner, With [HBD]
3	68012417AA	1	2, 3, 6, 7			EXM	DGZ		SCREW
4									SCREW
	05126229AA	1	2, 3, 6, 7			EXM	DGZ		[M8x30]
	05183964AA	4	2, 3, 6, 7			EXM	DGZ		[M6x10]
5	05175588AA	1	2, 3, 6, 7			EXM	DGZ		TENSIONER, Belt
6									SCREW
	06104226AA	2	3, 7			EXM	DGZ		[M10x90]
		2	2, 3, 6, 7			EXM	DGZ		[M10x90]
7	05073902AA	2	2, 3, 6, 7			EXM	DGZ		BOLT
8	05080250AA	2	2, 3, 6, 7			EXM	DGZ		CAP, CAP
9	68014055AA	1	6, 7, 2, 3			EXM	DGZ		BRACKET
10	06104684AA	1	2, 3, 6, 7			EXM	DGZ		BOLT, [M6x28]
11	05183964AA	4	2, 3, 6, 7			EXM	DGZ		SCREW, [M6x10]
12	68012421AA	1	2, 3, 6, 7			EXM	DGZ		PULLEY, Tensioner
13	68012463AA	1	2, 3, 6, 7			EXM	DGZ		PULLEY
14	68012459AA	4	2, 3, 6, 7			EXM	DGZ		BOLT, [M8x95]

SPRINTER (VB)

SERIES	LINE	BODY	ENGINE	TRANSMISSION
L = LOWLINE	3 = HD DODGE 2WD 2 = Med. Duty DODGE 2WD	03 = CAB CHASSIS WHEEL BASE 3 05 = CAB CHASSIS WHEEL BASE 5 13 = 119 WB 53 = 119 WB 15 = VAN WHEEL BASE 5 55 = WAGON WHEEL BASE 5 17 = VAN WHEEL BASE 7	EG2 = 3.5L V6 Gas Engine EXM = 3.0L V6 Turbo Diesel Engine	DGZ = 5-Speed Auto W5A380 Transmission

Belt Tensioner & Pulleys
Figure 7-420

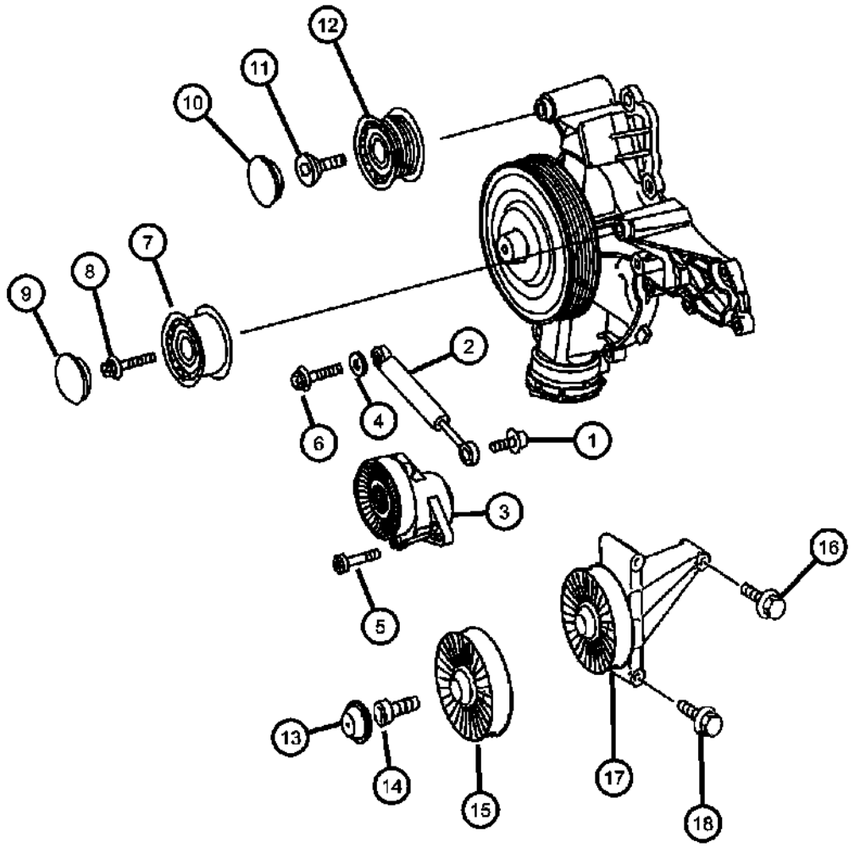

ITEM	PART NUMBER	QTY	LINE	SERIES	BODY	ENGINE	TRANS	TRIM	DESCRIPTION
1	05097832AA	1	2, 3, 6, 7			EG2	DGZ		BOLT, Torx
2	68020887AA	1	2, 3, 6, 7			EG2	DGZ		ABSORBER, Shock, To Belt Tensioner & Water Pump
3	04862624AA	1	2, 3, 6, 7			EG2	DGZ		TENSIONER, Belt
4									WASHER, Flat
	05098108AA	4	2, 3, 6, 7			EG2, EXM	DGZ		Shock Absorber on Water Pump
		4	3, 7			EG2, EXM	DGZ		Shock Absorber on Water Pump
5	05073680AA	1	2, 3, 6, 7			EG2	DGZ		SCREW, Belt Tightener to Timing Case
6	06104697AA	2	2, 3, 6, 7			EG2	DGZ		BOLT, Shock Absorber on Water Pump M8x34
7	68020889AA	1	2, 3, 6, 7			EG2	DGZ		PULLEY, Tensioner
8	04862626AA	1	2, 3, 6, 7			EG2	DGZ		SCREW, Sheave Pulley at Water Pump
9	05080250AA	1	2, 3, 6, 7			EG2	DGZ		CAP, CAP
10	05080250AA	1	2, 3, 6, 7			EG2	DGZ		CAP, CAP
11	05073717AA	1	2, 3, 6, 7			EG2	DGZ		SCREW, Sheave Pulley at Water Pump M8
12	68023936AA	1	2, 3, 6, 7			EG2	DGZ		PULLEY, Tensioner
13	05125553AA	1	2, 3, 6, 7			EG2	DGZ		CAP, Screw Cover
14	05126143AA	1	2, 3, 6, 7			EG2	DGZ		SCREW, [M10x50 - 10.9]
15	05117690AA	1	2, 3, 6, 7			EG2	DGZ		PULLEY, Tensioner
16	06104035AA	3	2, 3, 6, 7			EG2	DGZ		BOLT, [M8x90]
17	05117673AA	1	2, 3, 6, 7			EG2	DGZ		PULLEY, Tensioner
18	06104031AA	1	2, 3, 6, 7			EG2	DGZ		SCREW, [M8x60]

SPRINTER (VB)

SERIES	LINE	BODY	ENGINE	TRANSMISSION
L = LOWLINE	3 = HD DODGE 2WD 2 = Med. Duty DODGE 2WD	03 = CAB CHASSIS WHEEL BASE 3 05 = CAB CHASSIS WHEEL BASE 5 13 = 119 WB 53 = 119 WB 15 = VAN WHEEL BASE 5 55 = WAGON WHEEL BASE 5 17 = VAN WHEEL BASE 7	EG2 = 3.5L V6 Gas Engine EXM = 3.0L V6 Turbo Diesel Engine	DGZ = 5-Speed Auto W5A380 Transmission

Accessory Belts
Figure 7-510

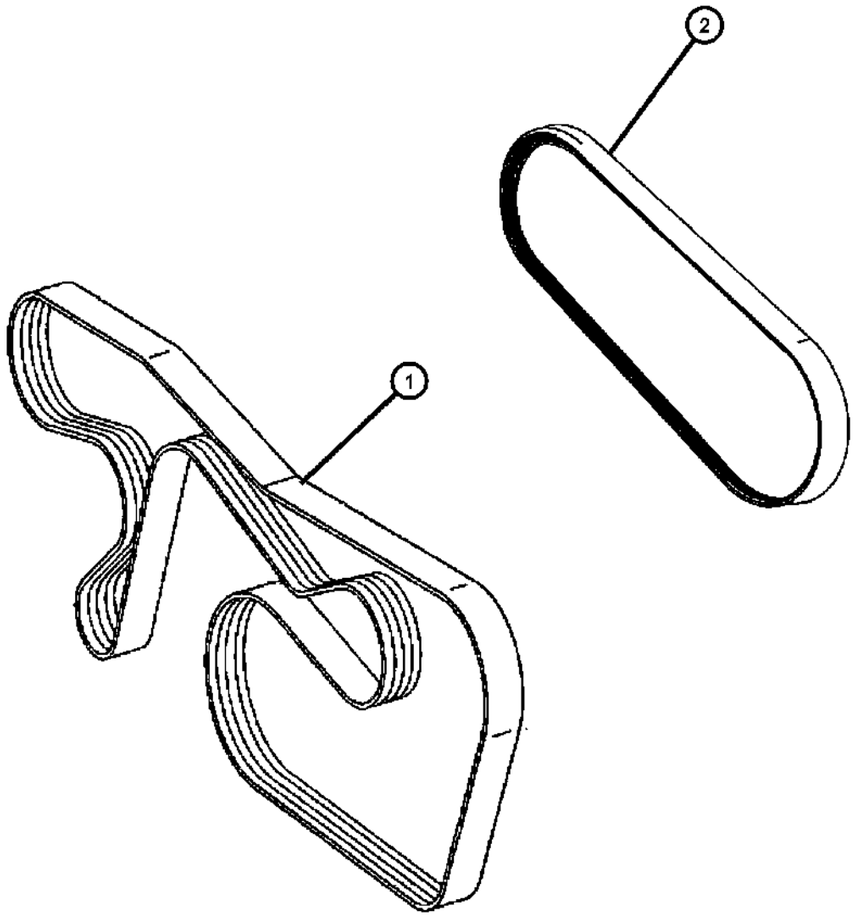

ITEM	PART NUMBER	QTY	LINE	SERIES	BODY	ENGINE	TRANS	TRIM	DESCRIPTION
1									BELT, Accessory Drive
	04891587AA	1	2, 3, 6, 7			EXM	DGZ		With [HAB]
	68012426AA	1	2, 3, 6, 7			EXM	DGZ		With [HBD]
	68012429AA	1	2, 3, 6, 7			EG2	DGZ		With [HAB]
	68012436AA	1	2, 6			EG2	DGZ		With [HBD]
2	68012438AA	1	2, 3, 6, 7			EXM	DGZ		BELT, Accessory Drive, Short [Dummy] Belt

SPRINTER (VB)

SERIES	LINE	BODY	ENGINE	TRANSMISSION
L = LOWLINE	3 = HD DODGE 2WD 2 = Med. Duty DODGE 2WD	03 = CAB CHASSIS WHEEL BASE 3 05 = CAB CHASSIS WHEEL BASE 5 13 = 119 WB 53 = 119 WB 15 = VAN WHEEL BASE 5 55 = WAGON WHEEL BASE 5 17 = VAN WHEEL BASE 7	EG2 = 3.5L V6 Gas Engine EXM = 3.0L V6 Turbo Diesel Engine	DGZ = 5-Speed Auto W5A380 Transmission

Transmission Cooling
Figure 7-610

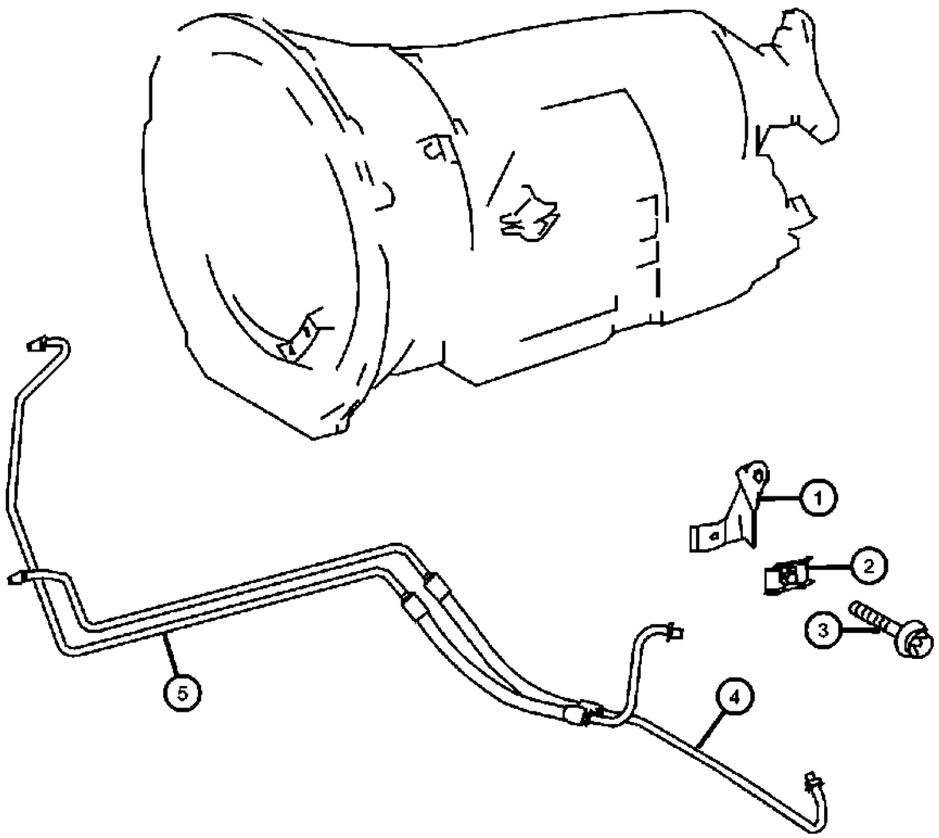

ITEM	PART NUMBER	QTY	LINE	SERIES	BODY	ENGINE	TRANS	TRIM	DESCRIPTION
1	68004975AA	1	2, 3, 6, 7			EG2, EXM	DGZ		BRACKET, Transmission Oil Cooler
2	05137249AA	1	2, 3, 6, 7			EG2, EXM	DGZ		CLAMP, Lines to Bracket
3									SCREW
	06104681AA	1	2, 3, 6, 7			EG2	DGZ		M6x15
		1	2, 3, 6, 7			EXM	DGZ		M6x15
4	68006215AA	1	2, 3, 6, 7			EG2, EXM	DGZ		TUBE AND HOSE, Oil Cooler, Feed
5	68006237AA	1	2, 3, 6, 7			EG2, EXM	DGZ		TUBE AND HOSE, Oil CoolerReturn

SPRINTER (VB)

SERIES	LINE	BODY	ENGINE	TRANSMISSION
L = LOWLINE	3 = HD DODGE 2WD 2 = Med. Duty DODGE 2WD	03 = CAB CHASSIS WHEEL BASE 3 05 = CAB CHASSIS WHEEL BASE 5 13 = 119 WB 53 = 119 WB 15 = VAN WHEEL BASE 5 55 = WAGON WHEEL BASE 5 17 = VAN WHEEL BASE 7	EG2 = 3.5L V6 Gas Engine EXM = 3.0L V6 Turbo Diesel Engine	DGZ = 5-Speed Auto W5A380 Transmission

Front Grille
Figure 7-710

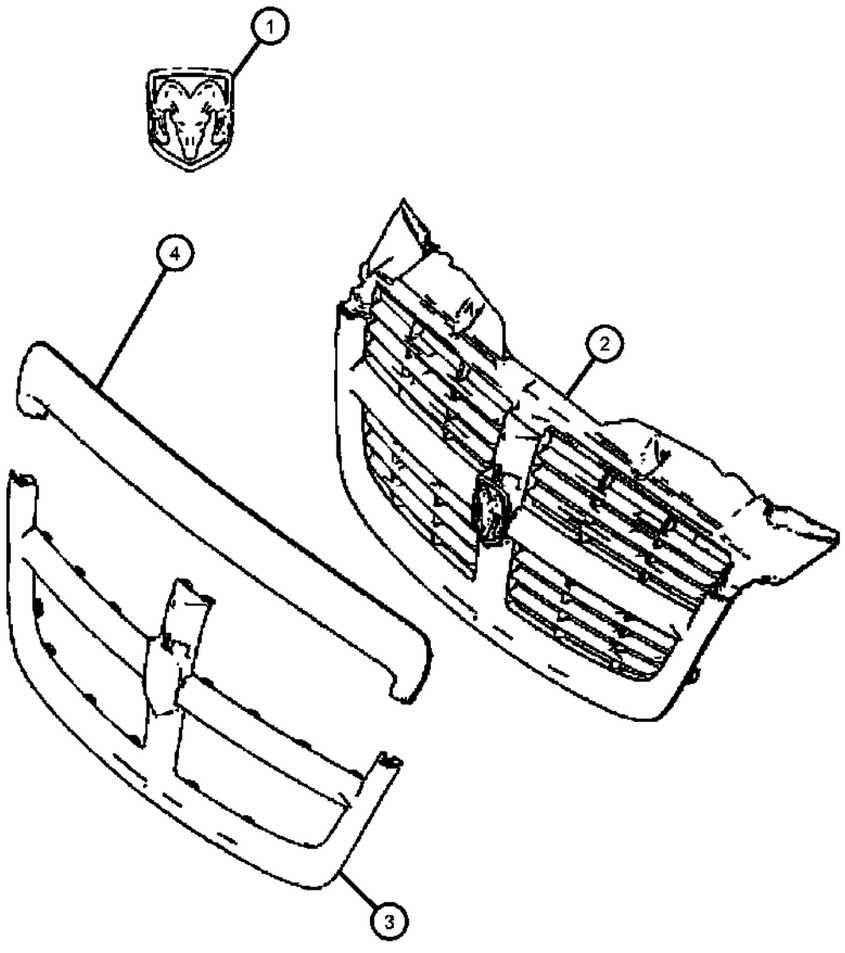

ITEM	PART NUMBER	QTY	LINE	SERIES	BODY	ENGINE	TRANS	TRIM	DESCRIPTION
1	68006601AA	1	2, 3			EG2, EXM	DGZ		MEDALLION, Ram Head
2									GRILLE, Radiator
	1GY48DX9AA	1	2, 3			EG2, EXM	DGZ		[Dodge]
	1HQ77DX9AA	1	6, 7			EG2, EXM	DGZ		[Freightliner]
3									COVER, Radiator
	68014809AA	1	3			EG2, EXM	DGZ		
		1	2, 3			EG2, EXM	DGZ		
4									MOLDING, Hood
	1HE94DX9AA	1	2, 3			EG2, EXM	DGZ		
	68020895AA	1	6, 7			EG2, EXM	DGZ		Includes Name Plate [Freightliner]

SPRINTER (VB)

SERIES	LINE	BODY	ENGINE	TRANSMISSION
L = LOWLINE	3 = HD DODGE 2WD 2 = Med. Duty DODGE 2WD	03 = CAB CHASSIS WHEEL BASE 3 05 = CAB CHASSIS WHEEL BASE 5 13 = 119 WB 53 = 119 WB 15 = VAN WHEEL BASE 5 55 = WAGON WHEEL BASE 5 17 = VAN WHEEL BASE 7	EG2 = 3.5L V6 Gas Engine EXM = 3.0L V6 Turbo Diesel Engine	DGZ = 5-Speed Auto W5A380 Transmission

Group - 8

Electrical

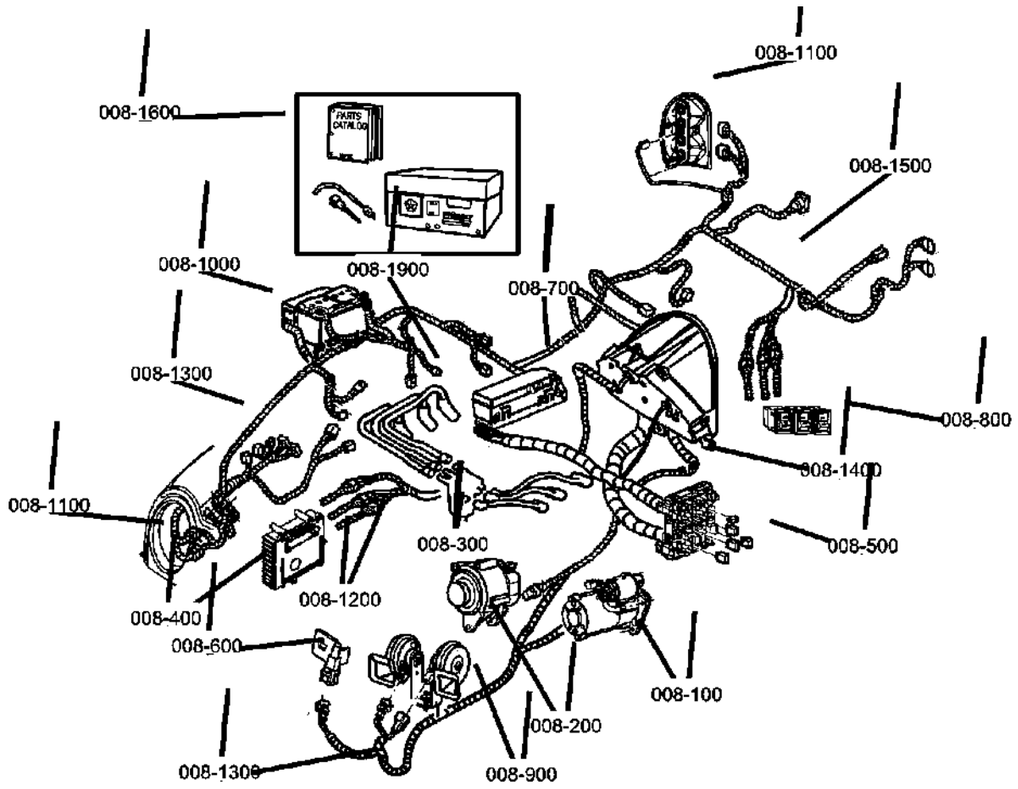

008-100
Starters

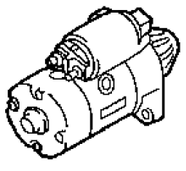

008-1000
Battery Tray and Cables

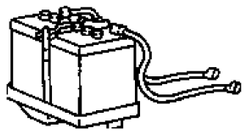

008-1100
Lamps - Front, Rear and Courtesy

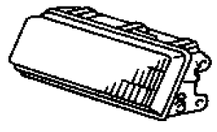

008-1200
Wiring-Engine & Related Parts

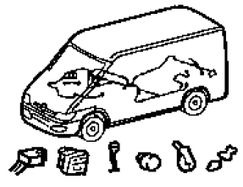

008-1300
Wiring-Headlamp to Dash

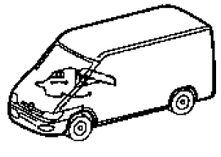

008-1400
Wiring-Instrument Panel

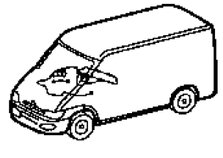

008-1500
Wiring-Body & Accessories

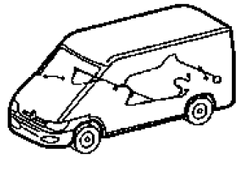

008-1600
Wiring Repair

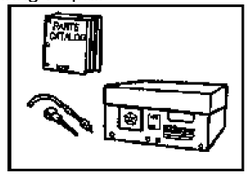

008-1700
Air Bag Systems



008-1800
Park Assist



008-1900
Spark Plugs-Cables-Coils

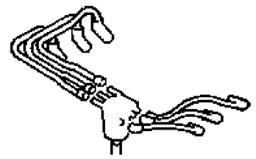

008-200
Alternators

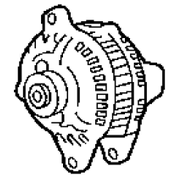

008-400
Modules

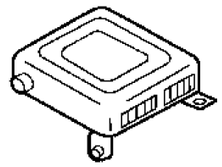

008-500
Relays

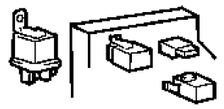

008-600
Sensors

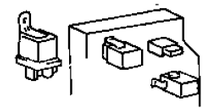

008-700
Single Board Engine Controllers

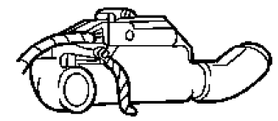

008-800
Switches

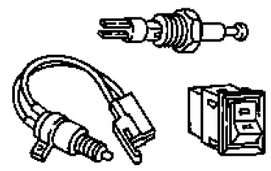

008-900
Horns

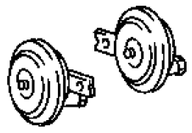

Group - 8 Electrical

Illustration Title — Group-Fig. No.

Starters
Starter ..... Fig. 8 - 110

Alternators
Alternator ..... Fig. 8 - 210

Modules
Engine Control Modules ..... Fig. 8 - 405
Transmission Control Unit ..... Fig. 8 - 410
Fuse Box / Body Controller ..... Fig. 8 - 415
Electronic Stability Program (ESP) ..... Fig. 8 - 420
Tire Pressure Check ..... Fig. 8 - 425
Trailer Coupling ..... Fig. 8 - 430
Horn & Outboard Temperature Sensor ..... Fig. 8 - 435
Belt Locking Retractor,Airbag & Sidebag ..... Fig. 8 - 440
Auxilary Heater Control Unit ..... Fig. 8 - 445
Air Bag Control Unit ..... Fig. 8 - 450

Relays
Relay, Fusebox And Control Modules Seat Frame ..... Fig. 8 - 510

Sensors
Brake Pad Wear Indicator & Speed Sensor ..... Fig. 8 - 610
Engine Sensors & Related Parts ..... Fig. 8 - 620
Engine Sensors & Related Parts ..... Fig. 8 - 630
Ignition Coil & Spark Plug ..... Fig. 8 - 640
Side Impact Airbag Sensors ..... Fig. 8 - 650

Single Board Engine Controllers
Engine Control Module ..... Fig. 8 - 710

Switches
Switches - Instrument Panel / [1 Of 2] ..... Fig. 8 - 810
Switches - Instrument Panel & Center Console / [2 Of 2] ..... Fig. 8 - 815
Door Trim Panel ..... Fig. 8 - 820

Horns
Horns ..... Fig. 8 - 910
Audible Reverse Signal Horn ..... Fig. 8 - 920

Battery Tray and Cables
Battery Tray ..... Fig. 8 - 1010
Auxilary Battery Tray, Battery Cable & Contactor ..... Fig. 8 - 1020

Lamps - Front, Rear and Courtesy
Head Lamp Unit,Turn Signal & Lamp at Side ..... Fig. 8 - 1110
Rear Stop Lamps ..... Fig. 8 - 1120
Rear Stop Lamp & License Plate Lamp ..... Fig. 8 - 1140
Interior Lamp,Contact Switch ..... Fig. 8 - 1150
Clearance Roof Lamps ..... Fig. 8 - 1160

Wiring-Engine & Related Parts
Engine Wiring Harness ..... Fig. 8 - 1210
Engine Wiring Harness ..... Fig. 8 - 1220

Wiring-Headlamp to Dash
Headlamp To Dash / Body Harness ..... Fig. 8 - 1310
Headlamp To Dash / Body Harness ..... Fig. 8 - 1320

Wiring-Instrument Panel
Instrument Panel Wiring Harness ..... Fig. 8 - 1410
Headlamp Range Adjustment Harness ..... Fig. 8 - 1420

Wiring-Body & Accessories
Frame Mounted Cable Harness ..... Fig. 8 - 1505
Wiring Harness - Fuel Tank ..... Fig. 8 - 1510
Front Door Wiring Harness & Control Module ..... Fig. 8 - 1515
Rear Door Wiring Harness & Control Module ..... Fig. 8 - 1525
Cable Cover & Ducts ..... Fig. 8 - 1530
Anti-Theft Alarm System ..... Fig. 8 - 1535
Cooling Module Harness ..... Fig. 8 - 1540
Wiring Harness - Roof ..... Fig. 8 - 1545
Sliding Door Wiring Harness ..... Fig. 8 - 1550

Wiring Repair
Wiring Harness Tie Straps & Related Parts ..... Fig. 8 - 1610

Air Bag Systems
Drivers Air Bag & Clock Spring ..... Fig. 8 - 1710

Park Assist
Parktronic System (PTS) ..... Fig. 8 - 1805
Audible Reversing Signal ..... Fig. 8 - 1810

Spark Plugs-Cables-Coils
Ignition System ..... Fig. 8 - 1905

Starter
Figure 8-110

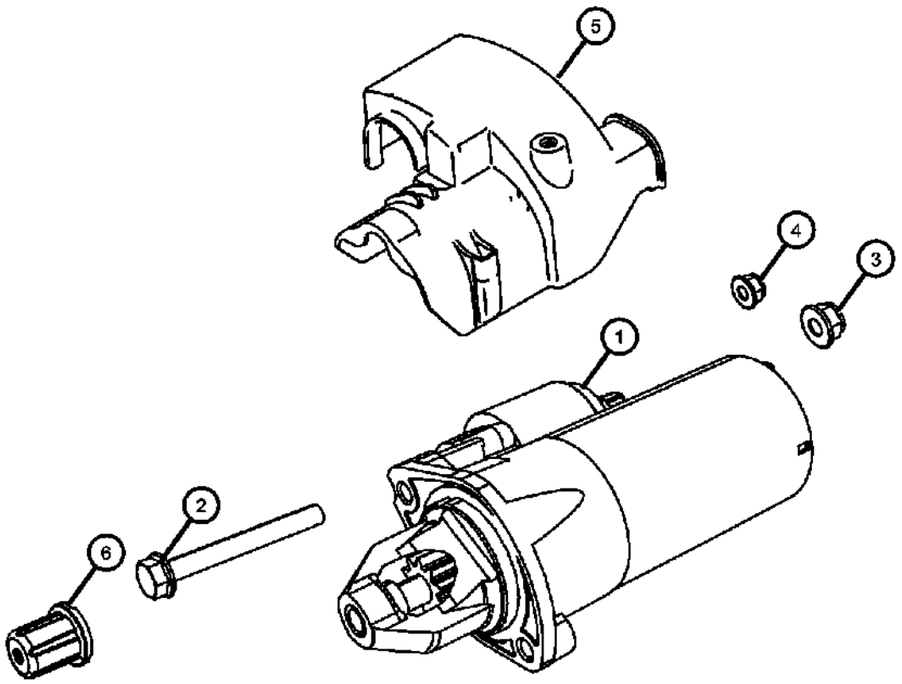

ITEM	PART NUMBER	QTY	LINE	SERIES	BODY	ENGINE	TRANS	TRIM	DESCRIPTION
Note:									
Sales Codes:									
1									STARTER, Engine
	68011829AB	1	2, 3, 6, 7	L		EG2	DGZ		[Bosch] Brand
	68012448AB	1	2, 3, 6, 7	L		EXM	DGZ		[Bosch] Brand
2									SCREW
	06104226AA	2	3, 7	L	03, 05	EG2, EXM	DGZ		Starter To Engine Block
		2	2, 6	L	13, 15, 17, 53, 55	EG2, EXM	DGZ		Starter To Engine Block
3	05097674AA	1	2, 3, 6, 7	L	13, 15, 17, 53, 55	EG2, EXM	DGZ		NUT, Hex, Wiring Harness To Starter / Circuit [50] [M6]
4									NUT
	06104709AA	1	3, 7	L	03, 05	EG2, EXM	DGZ		Wiring Harness To Starter / Circuit [30] [M8]
		1	2, 3, 6, 7	L	13, 15, 17, 53, 55	EG2, EXM	DGZ		Wiring Harness To Starter / Circuit [30] [M8]
5	68012494AA	1	2, 3, 6, 7	L		EXM	DGZ		COVER, Starter, Wiring Harness To Starter / [Circuit [30/50]
6									CAP, Nut
	05099209AB	1	3, 7	L	03, 05	EG2, EXM	DGZ		Wiring Harness To Starter / Circuit [30]
		1	2, 6	L	17, 53, 55, 13, 15	EG2, EXM	DGZ		Wiring Harness To Starter / Circuit [30]

SPRINTER (VB)

SERIES	LINE	BODY	ENGINE	TRANSMISSION
L = LOWLINE	3 = HD DODGE 2WD 2 = Med. Duty DODGE 2WD	03 = CAB CHASSIS WHEEL BASE 3 05 = CAB CHASSIS WHEEL BASE 5 13 = 119 WB 53 = 119 WB 15 = VAN WHEEL BASE 5 55 = WAGON WHEEL BASE 5 17 = VAN WHEEL BASE 7	EG2 = 3.5L V6 Gas Engine EXM = 3.0L V6 Turbo Diesel Engine	DGZ = 5-Speed Auto W5A380 Transmission

Alternator
Figure 8-210

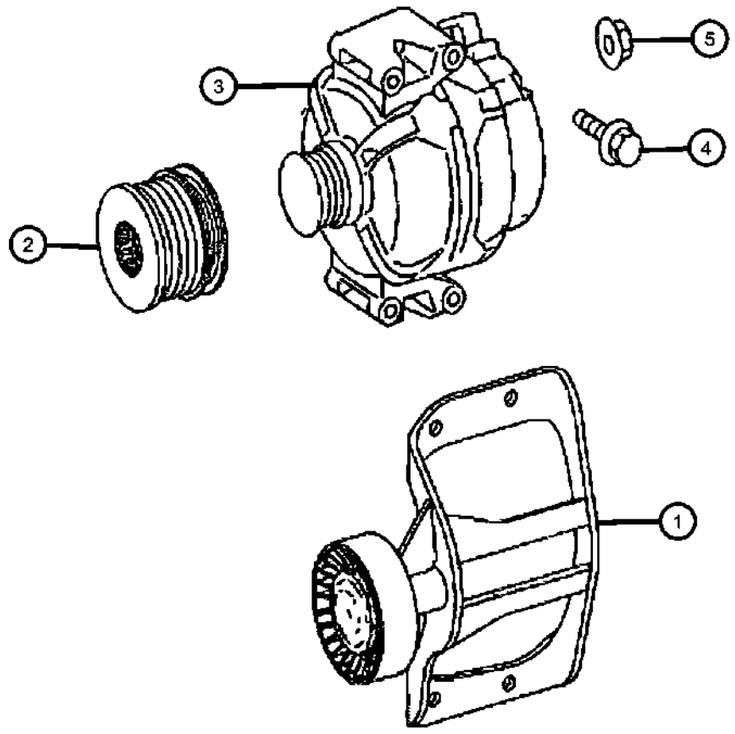

ITEM	PART NUMBER	QTY	LINE	SERIES	BODY	ENGINE	TRANS	TRIM	DESCRIPTION
1	68012463AA	1	2, 3, 6, 7	L		EXM	DGZ		PULLEY
2	05175811AA	1	2, 3, 6, 7	L		EXM	DGZ		PULLEY, Alternator
3									ALTERNATOR
	04801250AC	1	2, 3, 6, 7	L		EXM	DGZ		Valeo 14V/180A;14V/180A
	68011841AA	1	2, 3, 6, 7	L		EG2	DGZ		Bosch 14V/180A;14V/180A / With [BAD]
	68011843AA	1	2, 3, 6, 7	L		EG2	DGZ		Bosch 14V/220A With [BAJ]
	68022877AB	1	2, 3, 6, 7	L		EXM	DGZ		With [BAJ Or HBD]
4									BOLT
	06104035AA	4	2, 3, 6, 7	L		EG2	DGZ		Mounting Generator [M8x90]
	68012459AA	4	2, 3, 6, 7	L		EXM	DGZ		Alternator Mounting[M8x95]
5									NUT
	06104709AA	1	7, 2, 3, 6	L	13, 15, 17, 53, 55	EXM	DGZ		Wiring Harness to Alternator Circuit 30 M8
		1	3, 7	L	03, 05	EXM	DGZ		Wiring Harness to Alternator Circuit 30 M8

SPRINTER (VB)

SERIES	LINE	BODY	ENGINE	TRANSMISSION
L = LOWLINE	3 = HD DODGE 2WD 2 = Med. Duty DODGE 2WD	03 = CAB CHASSIS WHEEL BASE 3 05 = CAB CHASSIS WHEEL BASE 5 13 = 119 WB 53 = 119 WB 15 = VAN WHEEL BASE 5 55 = WAGON WHEEL BASE 5 17 = VAN WHEEL BASE 7	EG2 = 3.5L V6 Gas Engine EXM = 3.0L V6 Turbo Diesel Engine	DGZ = 5-Speed Auto W5A380 Transmission

Engine Control Modules
Figure 8-405

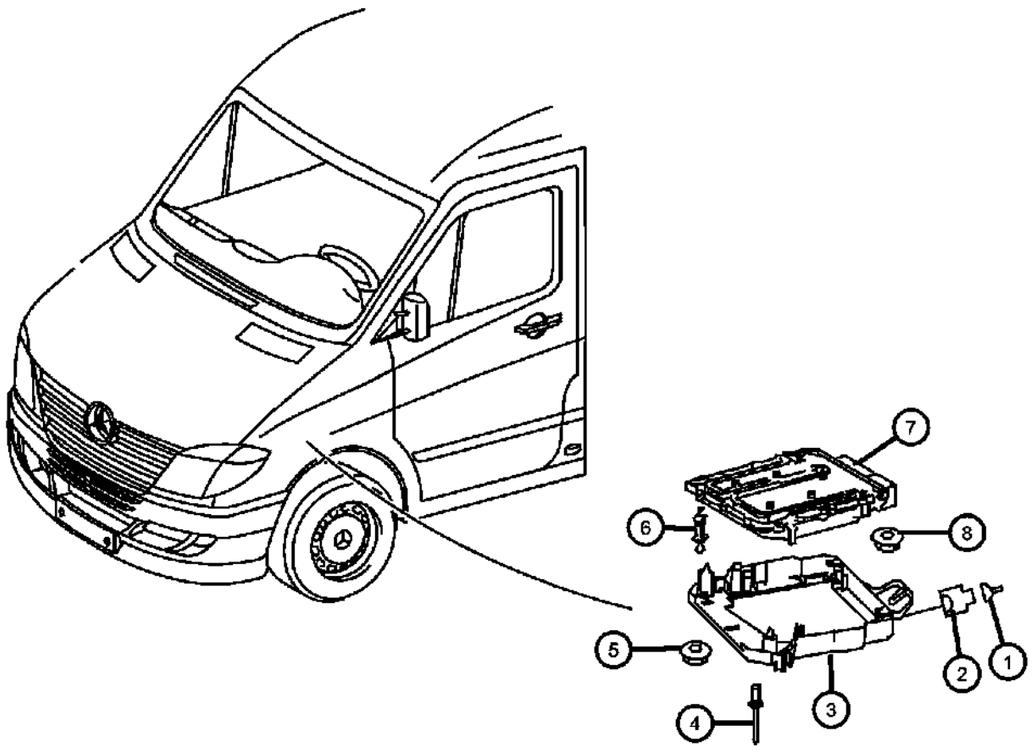

ITEM	PART NUMBER	QTY	LINE	SERIES	BODY	ENGINE	TRANS	TRIM	DESCRIPTION
1									TERMINAL
	05103873AA	3	3, 7	L	03, 05	EG2, EXM	DGZ		
		3	2, 3, 6, 7	L	13, 15, 17, 53, 55	EG2, EXM	DGZ		
2	05120278AA	1	2, 3, 6, 7	L		EG2	DGZ		CONNECTOR
3	68013397AA	1	2, 3, 6, 7	L		EXM	DGZ		BRACKET, Engine Control Module
4	68013397AA	1							RIVET, (NOT SERVICED)
5									NUT
	68004878AA	1	2, 3, 6, 7	L	13, 15, 17, 53, 55	EG2, EXM	DGZ		Bracket to Body M6
		1	3, 7	L	03, 05	EXM	DGZ		Bracket to Body M6
6	68011848AA	2	2, 3, 6, 7	L		EG2	DGZ		RETAINER, Engine Control Module
7									MODULE, Powertrain Control
	68013393AA	1	3, 7	L	03, 05	EG2	DGZ		Up To [08/31/2006]
		1	2, 6	L	13, 15, 17, 53, 55	EG2	DGZ		Up To [08/31/2006]
	68018165AA	1	2, 3, 6, 7	L		EXM	DGZ		Up To [01/31/2007]
	68022860AA	1	2, 3, 6, 7	L		EG2			After [08/31/2006]
	68028085AA	1	2, 3, 6, 7	L		EXM	DGZ		After [01/31/2007]
8	68004878AA	4	2, 3, 6, 7	L	53, 55, 13, 15, 17	EG2, EXM	DGZ		NUT, Control Unit Fixture M6

SPRINTER (VB)

SERIES	LINE	BODY	ENGINE	TRANSMISSION
L = LOWLINE	3 = HD DODGE 2WD 2 = Med. Duty DODGE 2WD	03 = CAB CHASSIS WHEEL BASE 3 05 = CAB CHASSIS WHEEL BASE 5 13 = 119 WB 53 = 119 WB 15 = VAN WHEEL BASE 5 55 = WAGON WHEEL BASE 5 17 = VAN WHEEL BASE 7	EG2 = 3.5L V6 Gas Engine EXM = 3.0L V6 Turbo Diesel Engine	DGZ = 5-Speed Auto W5A380 Transmission

AR = use ase required - = Non illustrrated part

<< RETURN TO GROUP INDEX

Transmission Control Unit
Figure 8-410

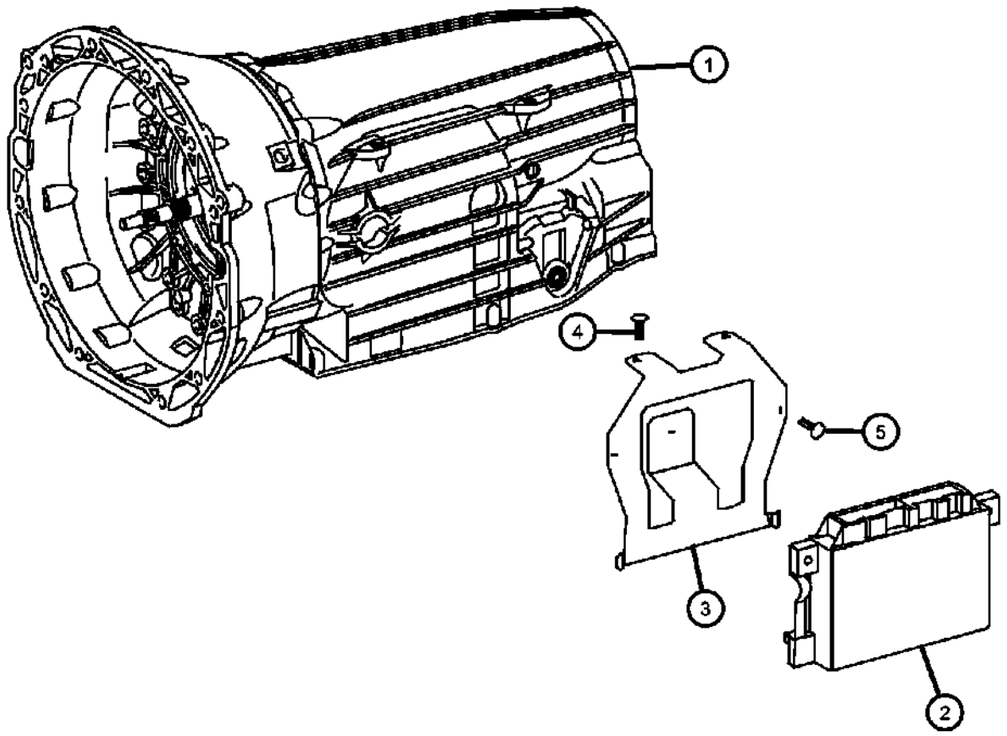

ITEM	PART NUMBER	QTY	LINE	SERIES	BODY	ENGINE	TRANS	TRIM	DESCRIPTION
1	68004878AA	4							TRANSMISSION, See Transmission Section, (NOT SERVICED)
2									MODULE, Transmission Control
	68005316AA	1	2, 3, 6, 7	L		EXM	DGZ		
	68013398AA	1	2, 3, 6, 7	L		EG2	DGZ		
3	68013402AA	1	2, 3, 6, 7	L		EXM, EG2	DGZ		BRACKET, Module
4									SCREW, Tapping
	06104566AA	3	3, 7	L	03, 05	EG2, EXM	DGZ		Bracket Mounting 4.2x13
		3	2, 3, 6, 7	L	13, 15, 17, 53, 55	EG2, EXM	DGZ		Bracket Mounting 4.2x13
5									SCREW
	06104567AA	2	3, 7	L	03, 05	EG2, EXM	DGZ		Control Unit to Bracket 4.2x16
		2	6, 7, 2, 3	L	13, 15, 17, 53, 55	EG2, EXM	DGZ		Control Unit to Bracket 4.2x16
-6									CONNECTOR
	05120838AA	1	2, 3, 6, 7	L		EG2, EXM	DGZ		[18 Pin N15/3]
	05120839AA	1	2, 3, 6, 7	L		EG2, EXM	DGZ		[12 Pin N15/3]
	68011208AA	1	2, 3, 6, 7	L		EG2, EXM	DGZ		[N15/3] COnnector At Transmission Control Unit

SPRINTER (VB)

SERIES	LINE	BODY	ENGINE	TRANSMISSION
L = LOWLINE	3 = HD DODGE 2WD 2 = Med. Duty DODGE 2WD	03 = CAB CHASSIS WHEEL BASE 3 05 = CAB CHASSIS WHEEL BASE 5 13 = 119 WB 53 = 119 WB 15 = VAN WHEEL BASE 5 55 = WAGON WHEEL BASE 5 17 = VAN WHEEL BASE 7	EG2 = 3.5L V6 Gas Engine EXM = 3.0L V6 Turbo Diesel Engine	DGZ = 5-Speed Auto W5A380 Transmission

Fuse Box / Body Controller
Figure 8-415

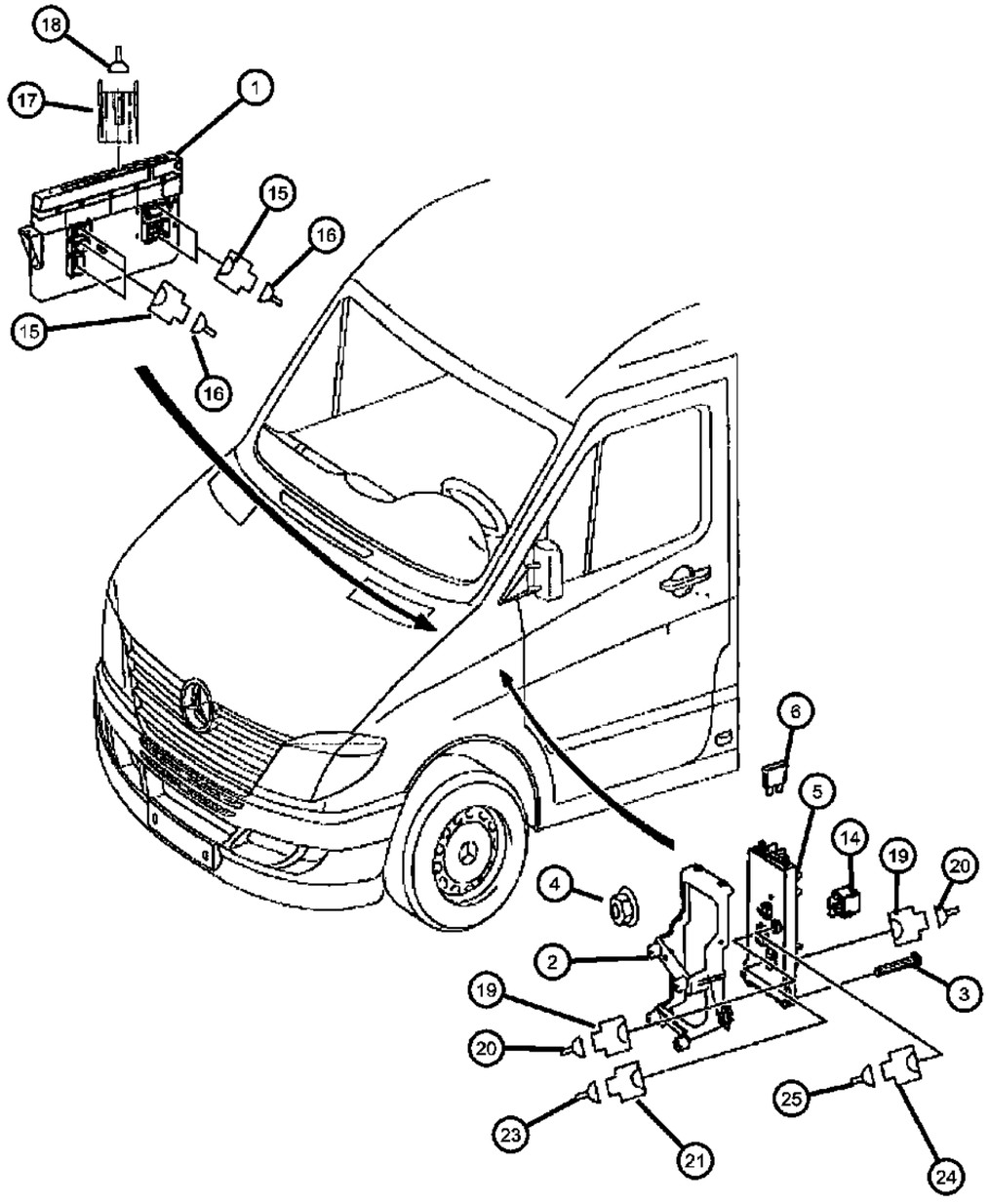

ITEM	PART NUMBER	QTY	LINE	SERIES	BODY	ENGINE	TRANS	TRIM	DESCRIPTION
1	68013368AA	1	2, 3, 6, 7	L		EG2, EXM	DGZ		MODULE, Body Controller
2	68013376AA	1	2, 3, 6, 7	L		EG2, EXM	DGZ		BRACKET, Central Electrical System
3	68013376AA	1							SCREW, (NOT SERVICED)
4									NUT
	68004878AA	4	3, 7	L	03, 05	EG2, EXM	DGZ		Mounting, Electrical Center [M6]
		4	2, 3, 6, 7	L	13, 15, 17, 53, 55	EG2, EXM	DGZ		Mounting, Electrical Center [M6]
5	68013375AA	1	2, 3, 6, 7	L		EG2, EXM	DGZ		BLOCK, Fuse
6									FUSE, Mini, 5 Amp, Tan
	05101465AA	99	3, 7	L	03, 05	EG2, EXM	DGZ		
		99	2, 3, 6, 7	L	13, 15, 17, 53, 55	EG2, EXM	DGZ		
-7									FUSE, Blade Type, 7.5 AMP
	05101466AA	99	3, 7	L	03, 05	EG2, EXM	DGZ		
		99	2, 3, 6, 7	L	13, 15, 17, 53, 55	EG2, EXM	DGZ		
-8									FUSE, Standard, 10 AMP, Red
	05104643AA	99	3, 7	L	03, 05	EG2, EXM	DGZ		
		99	2, 3, 6, 7	L	13, 15, 17, 53, 55	EG2, EXM	DGZ		
-9									FUSE, Standard, 15 AMP, Light Blue
	05101467AA	99	3, 7	L	03, 05	EG2, EXM	DGZ		
		99	2, 3, 6, 7	L	13, 15, 17, 53, 55	EG2, EXM	DGZ		
-10									FUSE, Blade Type, 20 AMP, Yellow
	05101468AA	99	3, 7	L	03, 05	EG2, EXM	DGZ		
		99	2, 3, 6, 7	L	13, 15, 17, 53, 55	EG2, EXM	DGZ		
-11									FUSE
	05104644AA	99	3, 7	L	03, 05	EG2, EXM	DGZ		[25 Amps]
		99	2, 3, 6, 7	L	53, 55, 13, 15, 17	EG2, EXM	DGZ		[25 Amps]
-12									FUSE
	05101469AA	99	3, 7	L	03, 05	EG2, EXM	DGZ		[30 Amp]
		99	2, 3, 6, 7	L	13, 15, 17, 53, 55	EG2, EXM	DGZ		[30 Amp]

SPRINTER (VB)

SERIES	LINE	BODY	ENGINE	TRANSMISSION
L = LOWLINE	3 = HD DODGE 2WD 2 = Med. Duty DODGE 2WD	03 = CAB CHASSIS WHEEL BASE 3 05 = CAB CHASSIS WHEEL BASE 5 13 = 119 WB 53 = 119 WB 15 = VAN WHEEL BASE 5 55 = WAGON WHEEL BASE 5 17 = VAN WHEEL BASE 7	EG2 = 3.5L V6 Gas Engine EXM = 3.0L V6 Turbo Diesel Engine	DGZ = 5-Speed Auto W5A380 Transmission

Fuse Box / Body Controller
Figure 8-415

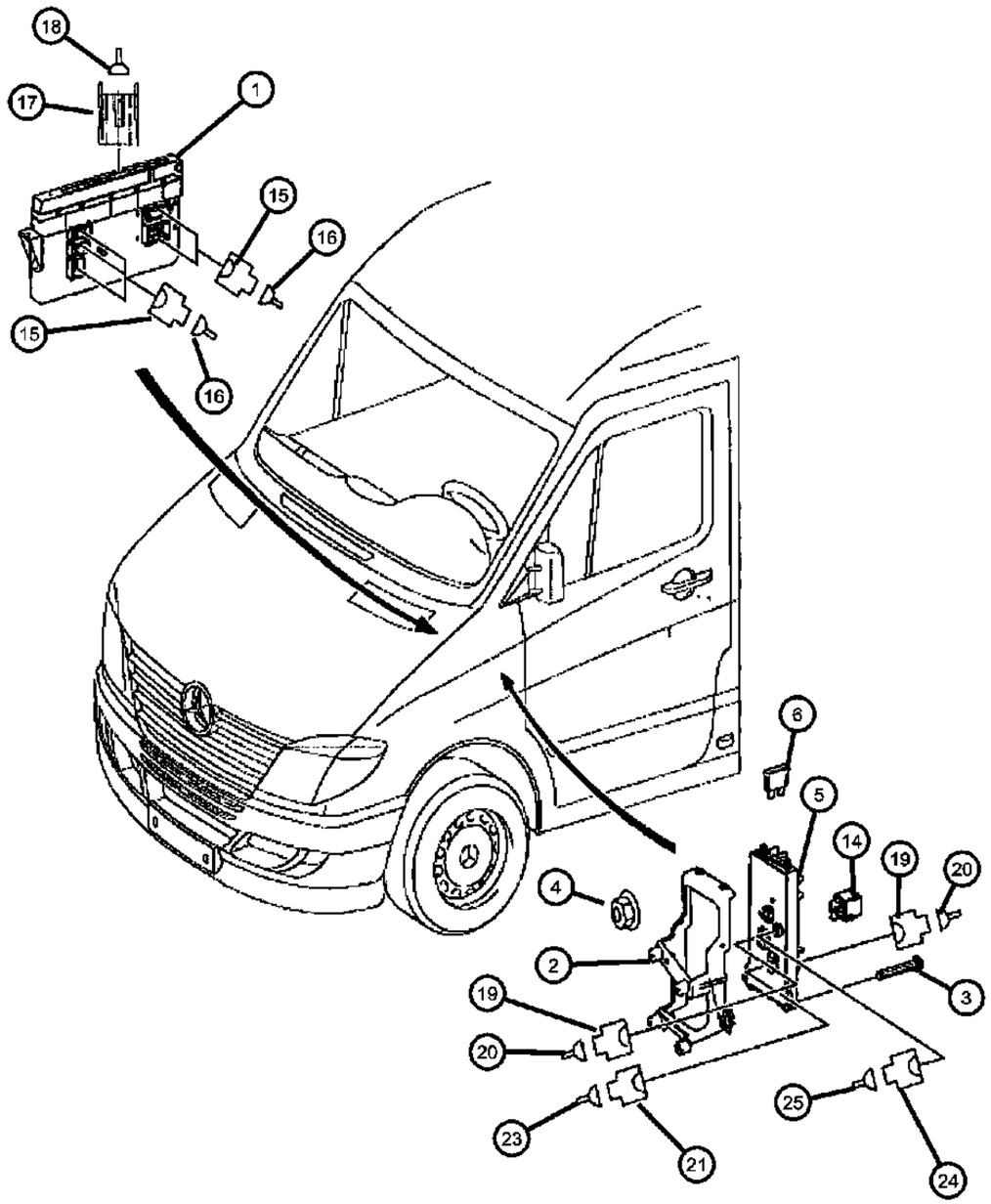

ITEM	PART NUMBER	QTY	LINE	SERIES	BODY	ENGINE	TRANS	TRIM	DESCRIPTION
-13	68005061AA	AR	2, 3, 6, 7	L		EG2, EXM	DGZ		TERMINAL, [25 Amp]
14									RELAY
	05101505AA	1	3, 7	L	03, 05	EG2, EXM	DGZ		Windshield Wiper [On / Off]
		1	3, 7	L	03, 05	EG2, EXM	DGZ		Starter Motor / Terminal [50]
		1	2, 3, 6, 7	L	13, 15, 17, 53, 55	EG2, EXM	DGZ		Starter Motor / Terminal [50]
		1	2, 3, 6, 7	L	13, 15, 17, 53, 55	EG2, EXM	DGZ		Windshield Wiper [On / Off]
		1	2, 3, 6, 7	L	13, 15, 17, 53, 55	EG2, EXM	DGZ		Windshield Wiper Stage [1 / 2]
	05103560AA	1	3, 7	L	03, 05	EG2, EXM	DGZ		Fuel Pump & Horn
		1	2, 3, 6, 7	L	13, 15, 17, 53, 55	EG2, EXM	DGZ		Fuel Pump & Horn
		1	3, 7	L	03, 05	EG2, EXM	DGZ		Windshield Wiper Stage [1 / 2]
	05120360AA	1	2, 6	L	13, 15, 17, 53, 55	EG2	DGZ		Ignition / Terminal [15]
		1	2, 3, 6, 7	L	13, 15, 17, 53, 55	EG2, EXM	DGZ		Ignition / Terminal [15]
		1	2, 3, 6, 7	L	13, 15, 17, 53, 55	EG2, EXM	DGZ		Engine Control / Terminal [87]
		1	2, 3, 6, 7	L	13, 15, 17, 53, 55	EG2, EXM	DGZ		Circuit [15R]
		1	3, 7	L	03, 05	EG2, EXM	DGZ		Circuit [15R]
		1	3, 7	L	03, 05	EG2, EXM	DGZ		Engine Control / Terminal [87]
15									CONNECTOR
	05103750AA	1	2, 3, 6, 7	L		EG2, EXM	DGZ		[18 Pin / N10]
	05120753AA	1	2, 3, 6, 7	L		EG2, EXM	DGZ		[24 Pin / N10]
	05120754AA	1	2, 3, 6, 7	L		EG2, EXM	DGZ		[52 Pin / N10]
	68011229AA	1	2, 3, 6, 7	L		EG2, EXM	DGZ		[6 Pin / N10]
	68011289AA	1	2, 3, 6, 7	L		EG2, EXM	DGZ		[20 Pin / N10]
16									TERMINAL
	05103873AA	3	3, 7	L	03, 05	EG2, EXM	DGZ		[0.75 MM2 / MQS N10]
		3	2, 3, 6, 7	L	13, 15, 17, 53, 55	EG2, EXM	DGZ		[0.75 MM2 / MQS N10]
17	05133407AA	1	2, 3, 6, 7	L		EG2, EXM	DGZ		BLOCK, Fuse, Fuse Holder / Air Conditioner [F69]
18	68016737AA	AR	2, 3, 6, 7	L		EG2, EXM	DGZ		TERMINAL, [6.0 - 10.0 MM2]

SPRINTER (VB)

SERIES	LINE	BODY	ENGINE	TRANSMISSION
L = LOWLINE	3 = HD DODGE 2WD 2 = Med. Duty DODGE 2WD	03 = CAB CHASSIS WHEEL BASE 3 05 = CAB CHASSIS WHEEL BASE 5 13 = 119 WB 53 = 119 WB 15 = VAN WHEEL BASE 5 55 = WAGON WHEEL BASE 5 17 = VAN WHEEL BASE 7	EG2 = 3.5L V6 Gas Engine EXM = 3.0L V6 Turbo Diesel Engine	DGZ = 5-Speed Auto W5A380 Transmission

AR = use ase required - = Non illustrrated part

<< RETURN TO GROUP INDEX

Fuse Box / Body Controller
Figure 8-415

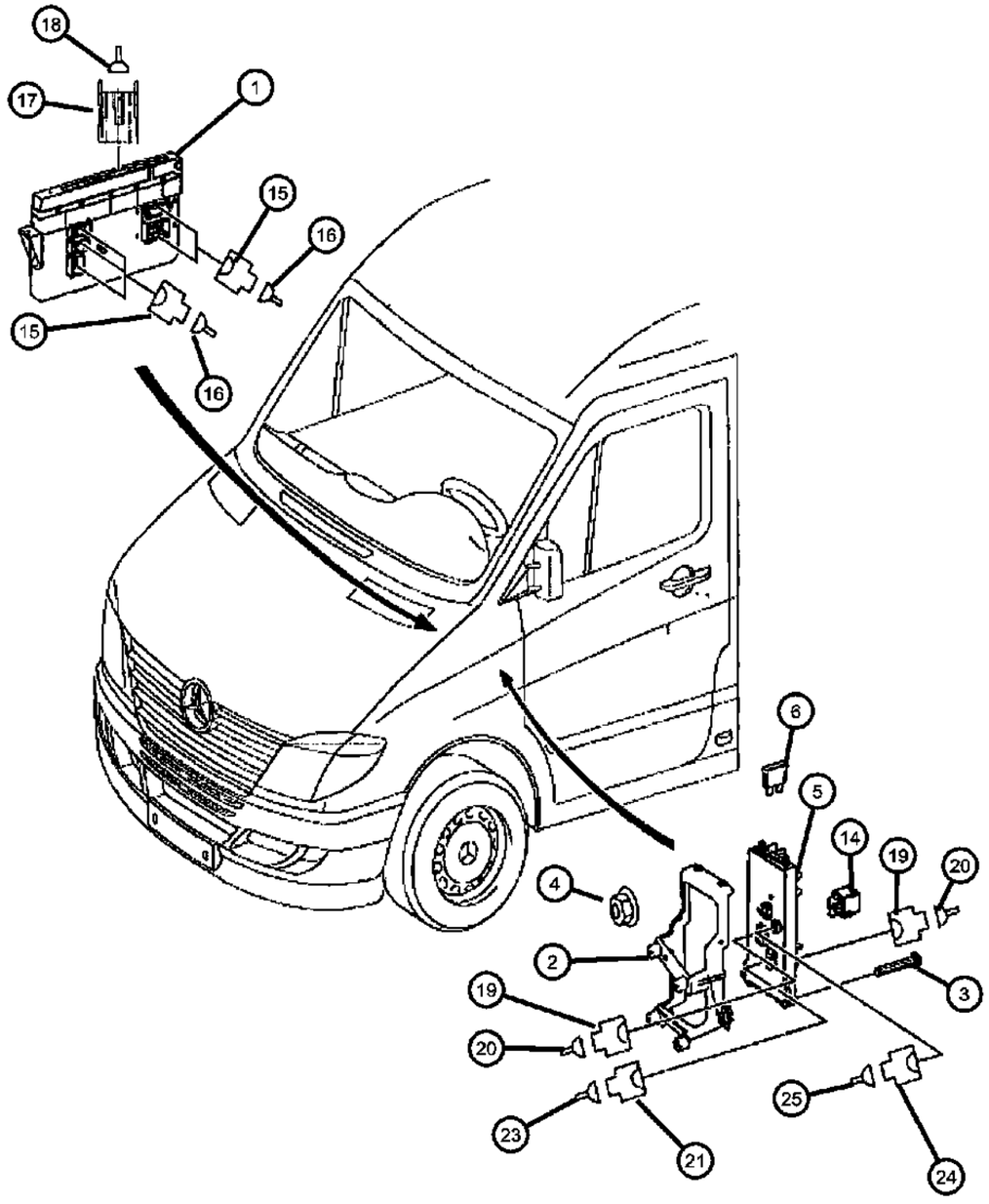

ITEM	PART NUMBER	QTY	LINE	SERIES	BODY	ENGINE	TRANS	TRIM	DESCRIPTION
19									CONNECTOR
	68011348AA	1	2, 3, 6, 7	L		EG2, EXM	DGZ		[15 Pin K40/9]
	68011398AA	1	2, 3, 6, 7	L		EG2, EXM	DGZ		[18 Pin K40/9]
20									TERMINAL
	05103892AA	1	2, 3, 6, 7	L		EG2, EXM	DGZ		[0.5 - 1.0 MM2 MCP;K40/9]
	05103893AA	AR	2, 3, 6, 7	L		EG2, EXM	DGZ		[1.5 - 2.5 MM2;K40/9]
21									CONNECTOR
	68011273AA	1	2, 3, 6, 7	L		EG2, EXM	DGZ		[3 Pin; K40/9]
	68016735AA	1	2, 3, 6, 7	L		EG2, EXM	DGZ		[14 Pin; K40/9]
-22	68016736AA	1	2, 3, 6, 7	L		EG2, EXM	DGZ		COVER, Fuseblock, [K40/9]
23	68011163AA	AR	2, 3, 6, 7	L		EG2, EXM	DGZ		TERMINAL, [16-25 QMM; K40/9]
24									CONNECTOR
	05143907AA	2	3, 7	L	05, 03	EG2, EXM	DGZ		[1 Pin / K40/9]
		2	2, 3, 6, 7	L	13, 15, 17, 53, 55	EG2, EXM	DGZ		[1 Pin / K40/9]
25									TERMINAL
	05103873AA	3	2, 3, 6, 7	L	13, 15, 17, 53, 55	EG2, EXM	DGZ		[.075 MM2: MQ2 K40/9]
		3	3, 7	L	03, 05	EG2, EXM	DGZ		[.075 MM2: MQ2 K40/9]

SPRINTER (VB)

SERIES	LINE	BODY	ENGINE	TRANSMISSION
L = LOWLINE	3 = HD DODGE 2WD 2 = Med. Duty DODGE 2WD	03 = CAB CHASSIS WHEEL BASE 3 05 = CAB CHASSIS WHEEL BASE 5 13 = 119 WB 53 = 119 WB 15 = VAN WHEEL BASE 5 55 = WAGON WHEEL BASE 5 17 = VAN WHEEL BASE 7	EG2 = 3.5L V6 Gas Engine EXM = 3.0L V6 Turbo Diesel Engine	DGZ = 5-Speed Auto W5A380 Transmission

AR = use ase required - = Non illustrrated part

<< RETURN TO GROUP INDEX

Electronic Stability Program (ESP)
Figure 8-420

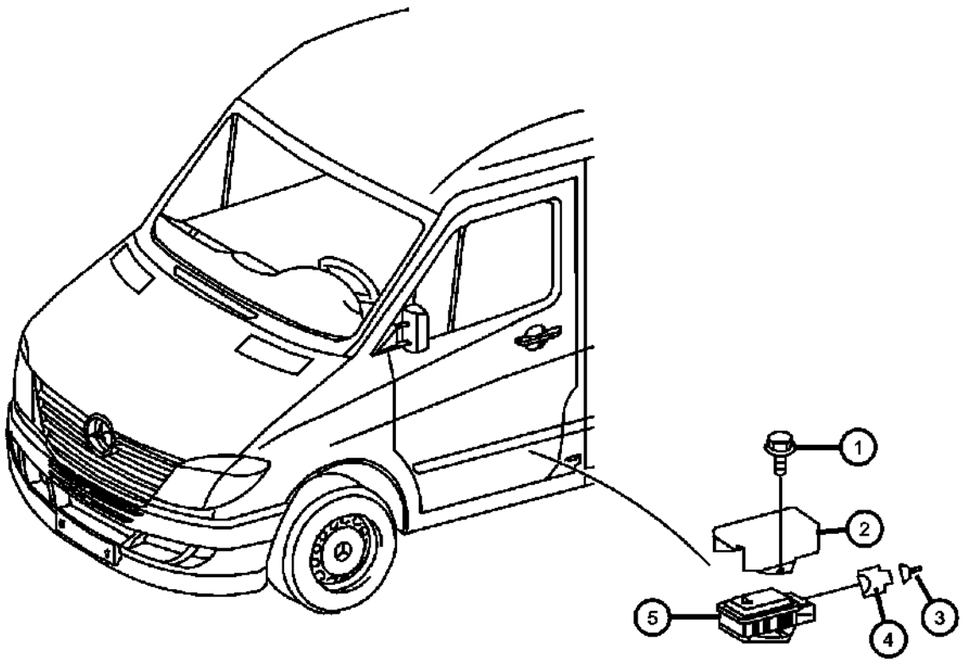

ITEM	PART NUMBER	QTY	LINE	SERIES	BODY	ENGINE	TRANS	TRIM	DESCRIPTION
1									SCREW
	06104142AA	2	3, 7	L	03, 05	EG2, EXM	DGZ		Cap M6x16
		2	2, 3, 6, 7	L	13, 15, 17, 53, 55	EXM, EG2	DGZ		Cap M6x16
2	05129653AA	1	2, 3, 6, 7	L		EG2, EXM	DGZ		COVER, Fuseblock, Turn Rate Sensor
3									TERMINAL
	05103873AA	3	3, 7	L	03, 05	EG2, EXM	DGZ		0.75 MM2,MQS;B24/15
		3	2, 3, 6, 7	L	13, 15, 17, 53, 55	EG2, EXM	DGZ		0.75 MM2,MQS;B24/15
4	68011286AA	1	2, 3, 6, 7	L		EG2, EXM	DGZ		CONNECTOR, Turn Rate Sensor 4-PIN,B24/15
5	68013423AA	1	2, 3, 6, 7	L		EG2, EXM	DGZ		SENSOR, Yaw Rate, Turn Rate Sensor

SPRINTER (VB)

SERIES	LINE	BODY	ENGINE	TRANSMISSION
L = LOWLINE	3 = HD DODGE 2WD 2 = Med. Duty DODGE 2WD	03 = CAB CHASSIS WHEEL BASE 3 05 = CAB CHASSIS WHEEL BASE 5 13 = 119 WB 53 = 119 WB 15 = VAN WHEEL BASE 5 55 = WAGON WHEEL BASE 5 17 = VAN WHEEL BASE 7	EG2 = 3.5L V6 Gas Engine EXM = 3.0L V6 Turbo Diesel Engine	DGZ = 5-Speed Auto W5A380 Transmission

Tire Pressure Check
Figure 8-425

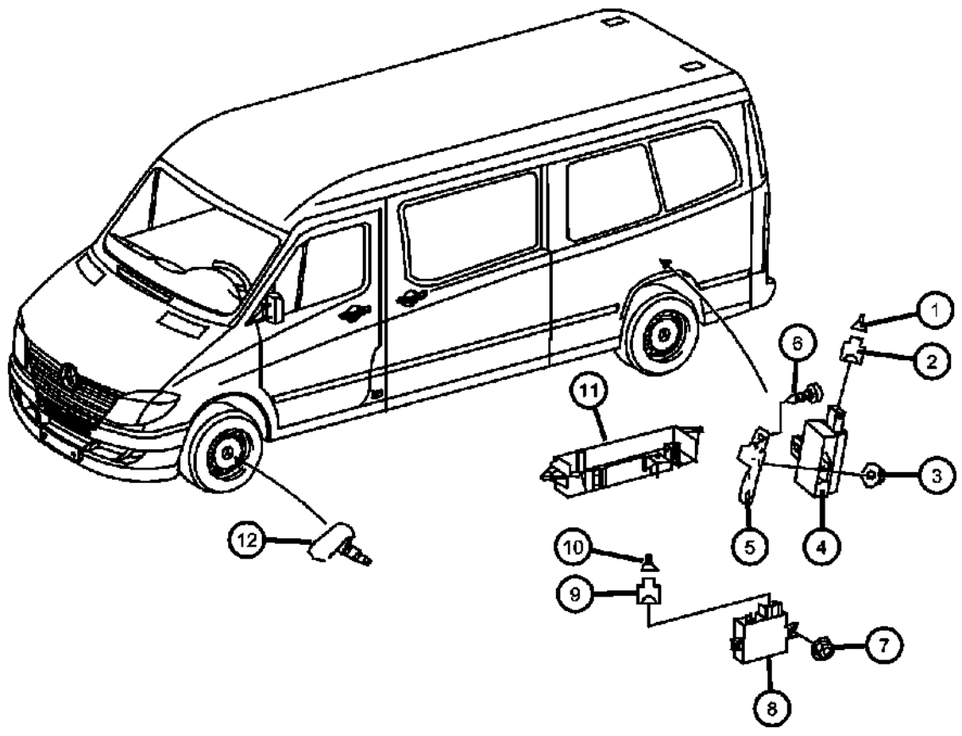

ITEM	PART NUMBER	QTY	LINE	SERIES	BODY	ENGINE	TRANS	TRIM	DESCRIPTION
1	05103874AA	1	2, 3, 6, 7	L		EG2, EXM	DGZ		TERMINAL
2	68011286AA	1	2, 3, 6, 7	L		EG2, EXM	DGZ		CONNECTOR
3									NUT
	68004878AA	2	3, 7	L	03, 05	EG2, EXM	DGZ		Bracket to Floor M6
		2	2, 3, 6, 7	L	13, 15, 17, 53, 55	EG2, EXM	DGZ		Bracket to Floor M6
	68026696AA	2	2, 6	L	13, 15, 17, 53, 55	EG2, EXM	DGZ		Bracket To Floor
4	68013414AA	2	2, 6	L		EG2, EXM	DGZ		MODULE, Low Tire Pressure Warning
5	68013426AA	1	2, 6	L		EG2, EXM	DGZ		BRACKET, Antenna
6	06104566AA	2	2, 3, 6, 7	L		EG2, EXM	DGZ		SCREW, Tapping, Protective Cap to Bracket 4.2x13
7									NUT
	68004878AA	2	3, 7	L	13, 15, 17, 53, 55	EXM	DGZ		Control Unit Fixture M6
		2	3, 7	L	03, 05	EXM	DGZ		Control Unit Fixture M6
8	68019246AA	1	2, 6	L		EG2, EXM	DGZ		MODULE, Low Tire Pressure Warning
9	05103750AA	1	2, 3, 6, 7	L		EG2, EXM	DGZ		CONNECTOR, Tire Pressure Monitor Control Module 18-PIN;N88/1
10									TERMINAL
	05103873AA	3	3, 7	L	03, 05	EG2, EXM	DGZ		0.75 MM2 MQS;N88/1
		3	2, 3, 6, 7	L	13, 15, 17, 53, 55	EG2, EXM	DGZ		0.75 MM2 MQS;N88/1
11	68004810AA	1	2, 3, 6, 7	L		EG2, EXM	DGZ		COVER, Antenna
12	68006771AA	4	2, 6	L		EG2, EXM	DGZ		SENSOR, Tire Pressure, Valve stem

SPRINTER (VB)

SERIES	LINE	BODY	ENGINE	TRANSMISSION
L = LOWLINE	3 = HD DODGE 2WD 2 = Med. Duty DODGE 2WD	03 = CAB CHASSIS WHEEL BASE 3 05 = CAB CHASSIS WHEEL BASE 5 13 = 119 WB 53 = 119 WB 15 = VAN WHEEL BASE 5 55 = WAGON WHEEL BASE 5 17 = VAN WHEEL BASE 7	EG2 = 3.5L V6 Gas Engine EXM = 3.0L V6 Turbo Diesel Engine	DGZ = 5-Speed Auto W5A380 Transmission

Trailer Coupling
Figure 8-430

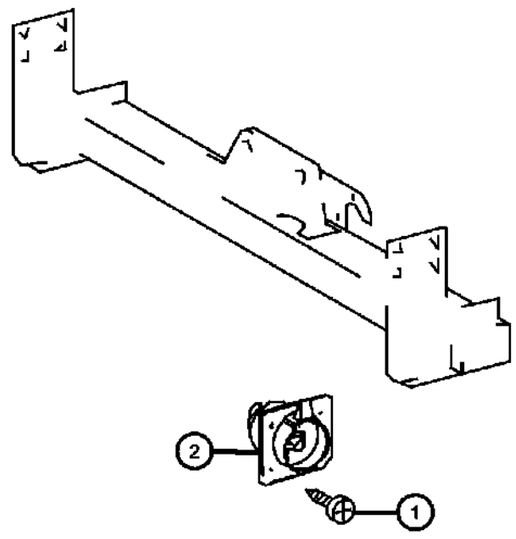

ITEM	PART NUMBER	QTY	LINE	SERIES	BODY	ENGINE	TRANS	TRIM	DESCRIPTION
1	05104609AA	4	2, 3, 6, 7	L		EG2, EXM	DGZ		SCREW, Socket Mounting 4.8x13
2	05127261AA	1	2, 3, 6, 7	L		EG2, EXM	DGZ		CONNECTOR, 7 Way

SPRINTER (VB)

SERIES	LINE	BODY	ENGINE	TRANSMISSION
L = LOWLINE	3 = HD DODGE 2WD 2 = Med. Duty DODGE 2WD	03 = CAB CHASSIS WHEEL BASE 3 05 = CAB CHASSIS WHEEL BASE 5 13 = 119 WB 53 = 119 WB 15 = VAN WHEEL BASE 5 55 = WAGON WHEEL BASE 5 17 = VAN WHEEL BASE 7	EG2 = 3.5L V6 Gas Engine EXM = 3.0L V6 Turbo Diesel Engine	DGZ = 5-Speed Auto W5A380 Transmission

Horn & Outboard Temperature Sensor
Figure 8-435

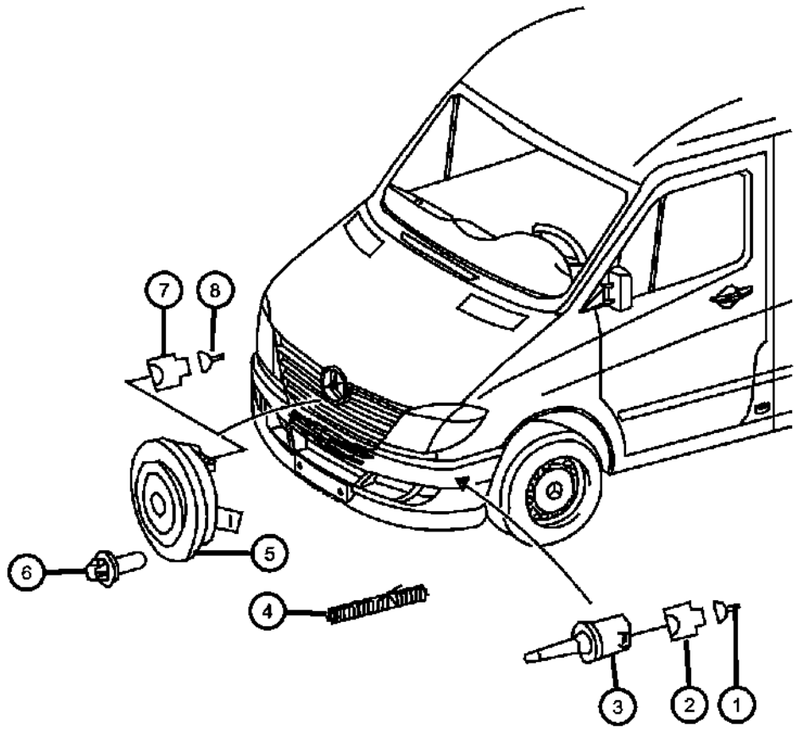

ITEM	PART NUMBER	QTY	LINE	SERIES	BODY	ENGINE	TRANS	TRIM	DESCRIPTION
1									TERMINAL
	05103873AA	3	3, 7	L	03, 05	EG2, EXM	DGZ		0.75 MM2,MQS;B14
		3	2, 3, 6, 7	L	13, 15, 17, 53, 55	EG2, EXM	DGZ		0.75 MM2,MQS;B14
2	05120277AA	1	2, 3, 6, 7	L		EG2, EXM	DGZ		CONNECTOR, Wiring Repair, Sensor of Outside Temperature Indicator 2-PIN,B14
3									SENSOR, Ambient Temperature
	05101096AA	1	3, 7	L	03, 05	EG2, EXM	DGZ		Outboard Temperature Feeler
		1	2, 3, 6, 7	L	13, 15, 17, 53, 55	EG2, EXM	DGZ		Outboard Temperature Feeler
4	05133388AA	1	2, 3, 6, 7	L		EG2, EXM	DGZ		TUBE, Heat Shrink, H1,H18,H18/1
5									HORN
	05120370AA	1	3, 7	L	03, 05	EG2, EXM	DGZ		
		1	2, 3, 6, 7	L	13, 15, 17, 53, 55	EG2, EXM	DGZ		
6	05073723AB	1	2, 3, 6, 7	L		EXM	DGZ		SCREW, Horn Mounting M8x20
7	05166277AA	1	2, 3, 6, 7	L		EG2, EXM	DGZ		CONNECTOR, 2-PIN,H1
8	68011404AA	AR	2, 3, 6, 7	L		EG2, EXM	DGZ		TERMINAL, H1

SPRINTER (VB)

SERIES	LINE	BODY	ENGINE	TRANSMISSION
L = LOWLINE	3 = HD DODGE 2WD 2 = Med. Duty DODGE 2WD	03 = CAB CHASSIS WHEEL BASE 3 05 = CAB CHASSIS WHEEL BASE 5 13 = 119 WB 53 = 119 WB 15 = VAN WHEEL BASE 5 55 = WAGON WHEEL BASE 5 17 = VAN WHEEL BASE 7	EG2 = 3.5L V6 Gas Engine EXM = 3.0L V6 Turbo Diesel Engine	DGZ = 5-Speed Auto W5A380 Transmission

AR = use ase required - = Non illustrrated part

<< RETURN TO GROUP INDEX

Belt Locking Retractor,Airbag & Sidebag
Figure 8-440

ITEM	PART NUMBER	QTY	LINE	SERIES	BODY	ENGINE	TRANS	TRIM	DESCRIPTION
1									SCREW
	06104188AA	2	3, 7	L	03, 05	EG2, EXM	DGZ		Control Unit to Bracket
		2	2, 3, 6, 7	L	13, 15, 17, 53, 55	EG2, EXM	DGZ		Control Unit to Bracket
2	68013424AA	2	2, 3, 6, 7	L		EG2, EXM	DGZ		SENSOR, Side Airbag Impact
3	68011282AA	2	2, 3, 6, 7	L		EG2, EXM	DGZ		CONNECTOR, Sensor Sidebag 2-PIN;A53,A54
4	05103874AA	1	2, 3, 6, 7	L		EG2, EXM	DGZ		TERMINAL, 0.75MM2,MQS,A53,A54
5	68023545AA	1	2, 3, 6, 7	L		EG2, EXM	DGZ		MODULE, Air Bag Control

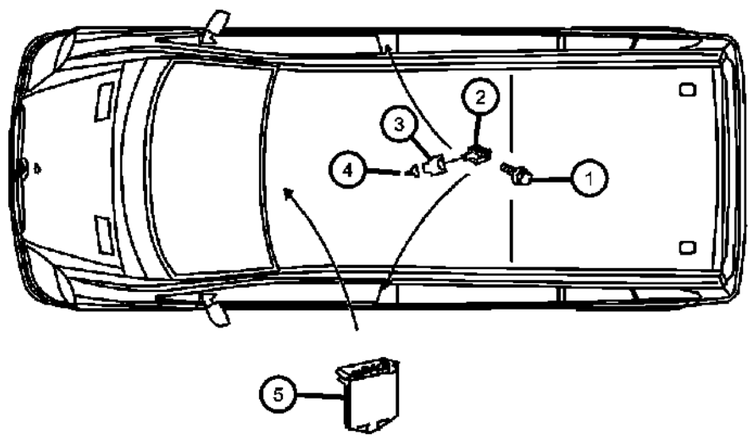

SPRINTER (VB)

SERIES	LINE	BODY	ENGINE	TRANSMISSION
L = LOWLINE	3 = HD DODGE 2WD 2 = Med. Duty DODGE 2WD	03 = CAB CHASSIS WHEEL BASE 3 05 = CAB CHASSIS WHEEL BASE 5 13 = 119 WB 53 = 119 WB 15 = VAN WHEEL BASE 5 55 = WAGON WHEEL BASE 5 17 = VAN WHEEL BASE 7	EG2 = 3.5L V6 Gas Engine EXM = 3.0L V6 Turbo Diesel Engine	DGZ = 5-Speed Auto W5A380 Transmission

Auxilary Heater Control Unit
Figure 8-445

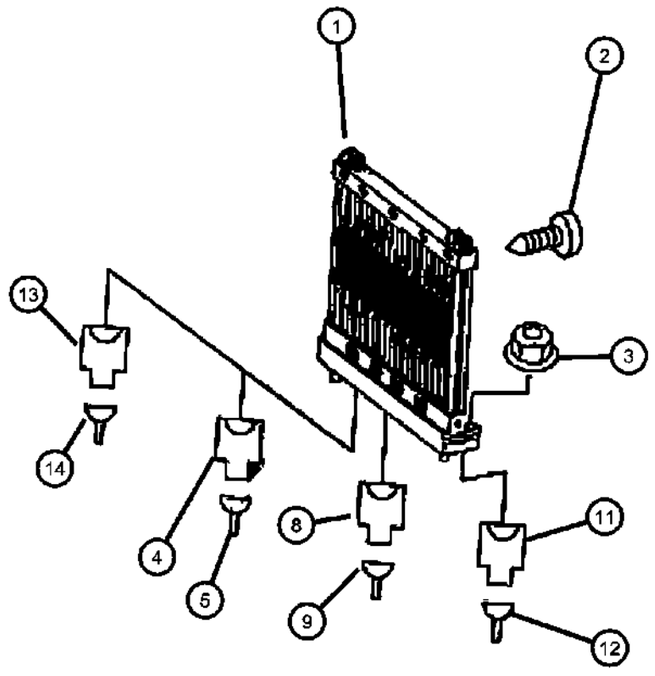

ITEM	PART NUMBER	QTY	LINE	SERIES	BODY	ENGINE	TRANS	TRIM	DESCRIPTION
1	68012665AA	1	2, 3, 6, 7	L		EG2, EXM	DGZ		HEATER, Electric Power Heater Control Module / With [HB9]
2	68012630AA	2	2, 3, 6, 7	L	13, 15, 17, 53, 55	EG2, EXM	DGZ		SCREW, [M4x16] Module Mounting
3	06105169AA	2	2, 3, 6, 7	L		EXM, EG2	DGZ		NUT, Heater Module Mounting [M8]
4	05133296AA	1	2, 3, 6, 7	L		EG2, EXM	DGZ		CONNECTOR, [N33/2]
5									TERMINAL
	05103880AA	AR	2, 3, 6, 7	L		EG2, EXM	DGZ		[0.5 - 1.0 MM2 / JPT;N33/2]
	05133370AA	2	2, 3, 6, 7	L		EG2, EXM	DGZ		[1.5 - 2.5 MM2 JPT; N33/2]
-6									GASKET
	05103661AA	1	2, 3, 6, 7	L		EG2, EXM	DGZ		[0.5 - 1.0 MM; N33/2]
	05120833AA	2	2, 3, 6, 7	L		EG2, EXM	DGZ		[1.0 - 2.5 MM; N33/2]
-7	05120833AA	2	2, 3, 6, 7	L		EG2, EXM	DGZ		GASKET, [N33/2]
8	68011286AA	1	2, 3, 6, 7	L		EG2, EXM	DGZ		CONNECTOR, [4 Pin / N33/2]
9	05103874AA	1	2, 3, 6, 7	L		EG2, EXM	DGZ		TERMINAL, [.75 MM2, MQS; N33/2]
-10	05120860AA	1	2, 3, 6, 7	L		EG2, EXM	DGZ		GASKET, [1.6 - 1.9 MM2; N33/2]
11	05120277AA	1	2, 3, 6, 7	L		EG2, EXM	DGZ		CONNECTOR, Wiring Repair, Temperature Sensor / [2 Pin B10/6]]
12	05120860AA	1	7, 2, 3, 6	L		EG2, EXM	DGZ		GASKET, [1.6 - 1.9 MM2; B10/6]
13	68011231AA	1	2, 3, 6, 7	L		EG2, EXM	DGZ		CONNECTOR, [PTC] Heater Booster / 4 Pin N33/4
14	05103873AA	3	2, 3, 6, 7	L	13, 15, 17, 53, 55	EG2, EXM	DGZ		TERMINAL, [.75 MM2 MQS; N33/4]

SPRINTER (VB)

SERIES	LINE	BODY	ENGINE	TRANSMISSION
L = LOWLINE	3 = HD DODGE 2WD 2 = Med. Duty DODGE 2WD	03 = CAB CHASSIS WHEEL BASE 3 05 = CAB CHASSIS WHEEL BASE 5 13 = 119 WB 53 = 119 WB 15 = VAN WHEEL BASE 5 55 = WAGON WHEEL BASE 5 17 = VAN WHEEL BASE 7	EG2 = 3.5L V6 Gas Engine EXM = 3.0L V6 Turbo Diesel Engine	DGZ = 5-Speed Auto W5A380 Transmission

AR = use ase required - = Non illustrrated part

<< RETURN TO GROUP INDEX

Air Bag Control Unit
Figure 8-450

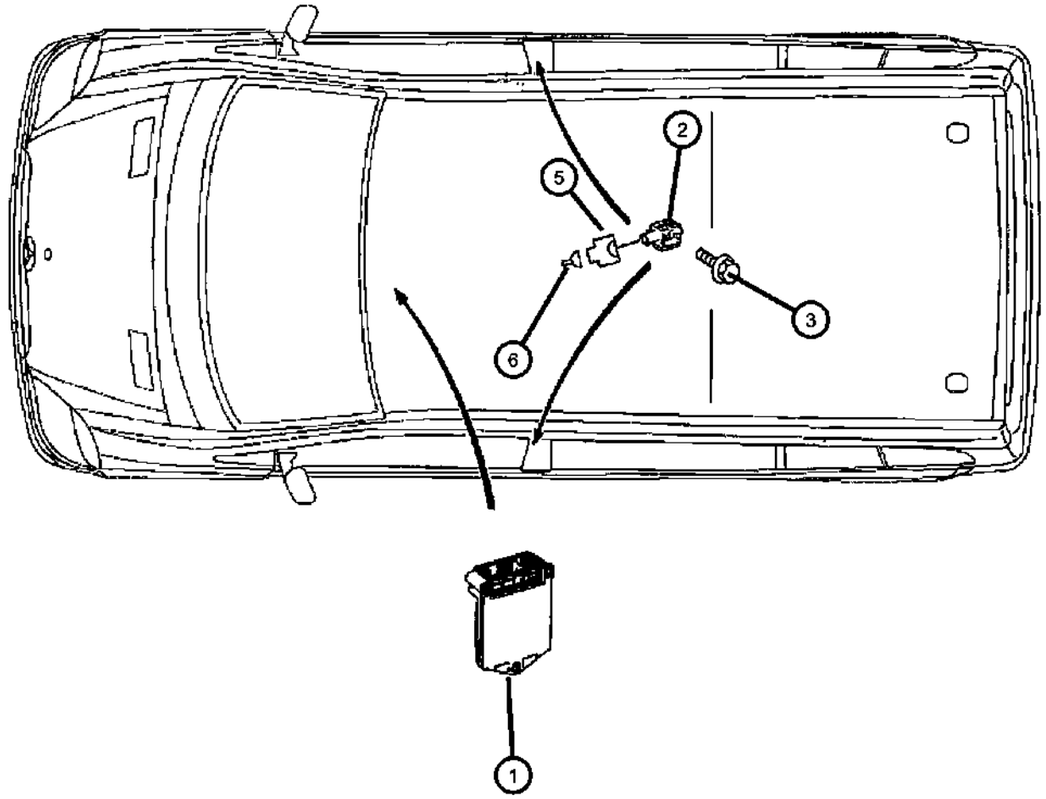

ITEM	PART NUMBER	QTY	LINE	SERIES	BODY	ENGINE	TRANS	TRIM	DESCRIPTION
1									MODULE, Air Bag Control
	68029747AA	1	2, 3, 6, 7	L		EXM	DGZ		With Auxilary Diesel Heater / With Or Without Front, Side & Curtain Airbags
	68029750AA	1	2, 3, 6, 7	L		EG2, EXM	DGZ		With Front, Side & Curtain Airbags / Without Auxilary Diesel Heater
	68029771AA	1	2, 3, 6, 7	L		EG2, EXM	DGZ		Standard Front Drivers & Passenger Airbag Only
2	68013424AA	2	3, 6, 7, 2	L		EG2, EXM	DGZ		SENSOR, Side Airbag Impact, Window & Thorax Air Bag Sensor
3	06104188AA	2	2, 3, 6, 7	L	13, 15, 17, 53, 55	EG2, EXM	DGZ		SCREW, Control Unit To Bracket [M6x55]
-4	06104004AA	1	2, 3, 6, 7	L		EXM	DGZ		BOLT, Control Unit To Floor [M6x12]
5	68011282AA	2	2, 3, 6, 7	L		EG2, EXM	DGZ		CONNECTOR, Side Air Bag [2 Pin A53/A54]
6	05103874AA	1	2, 3, 6, 7	L		EG2, EXM	DGZ		TERMINAL, [.75MM2; MQS; A53/A54]2
-7	05120860AA	1	2, 3, 6, 7	L		EG2, EXM	DGZ		GASKET, [1.6 - 1.9 MM2 / A53/A54]

SPRINTER (VB)

SERIES	LINE	BODY	ENGINE	TRANSMISSION
L = LOWLINE	3 = HD DODGE 2WD 2 = Med. Duty DODGE 2WD	03 = CAB CHASSIS WHEEL BASE 3 05 = CAB CHASSIS WHEEL BASE 5 13 = 119 WB 53 = 119 WB 15 = VAN WHEEL BASE 5 55 = WAGON WHEEL BASE 5 17 = VAN WHEEL BASE 7	EG2 = 3.5L V6 Gas Engine EXM = 3.0L V6 Turbo Diesel Engine	DGZ = 5-Speed Auto W5A380 Transmission

Relay, Fusebox And Control Modules Seat Frame
Figure 8-510

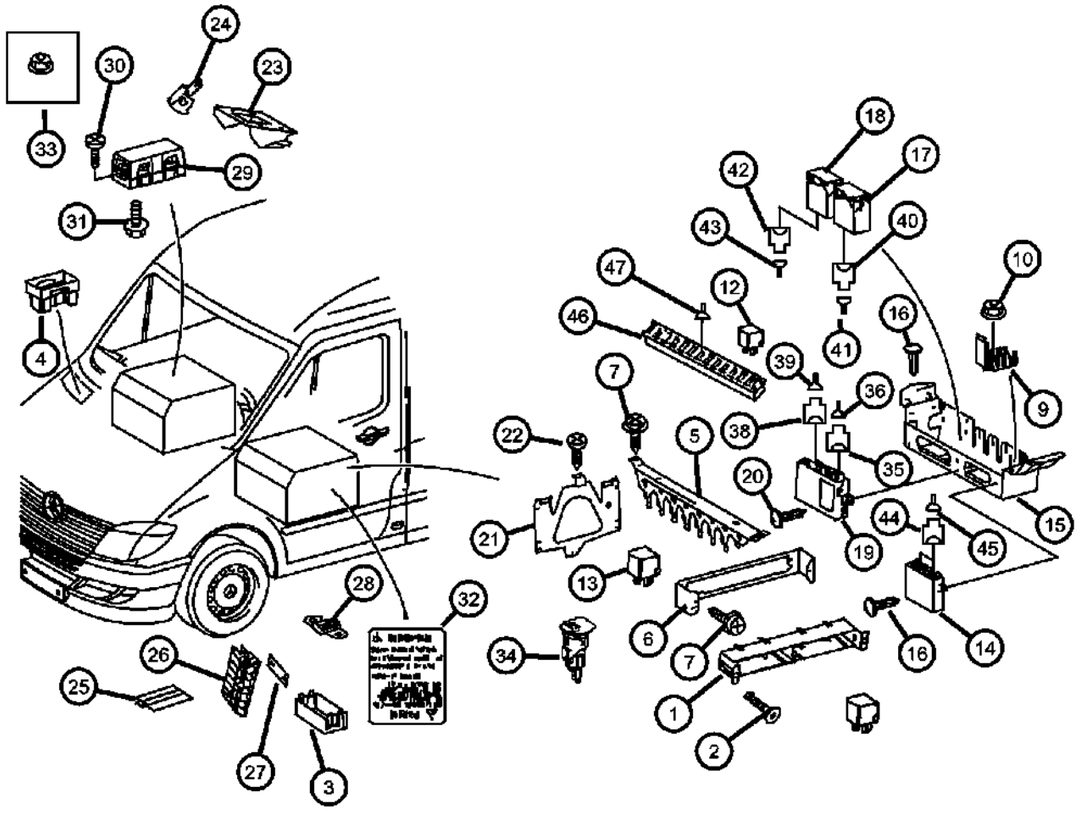

ITEM	PART NUMBER	QTY	LINE	SERIES	BODY	ENGINE	TRANS	TRIM	DESCRIPTION
1	05120507AA	1	2, 3, 6, 7	L	13, 15, 17, 53, 55	EG2, EXM	DGZ		CONNECTOR
2	68033265AA	2	2, 3, 6, 7	L		EG2, EXM	DGZ		SCREW
3	68013387AA	1	2, 3, 6, 7	L		EG2, EXM	DGZ		BRACKET
4	05139184AA	1	2, 3, 6, 7	L	13, 15, 17, 53, 55	EG2, EXM	DGZ		CONNECTOR
5	68011039AA	1	2, 3, 6, 7	L		EG2, EXM	DGZ		BRACKET, Relay
6	68011038AA	1	2, 3, 6, 7	L		EG2, EXM	DGZ		BRACKET, Relay
7	06104527AA	2	2, 3, 6, 7	L	13, 15, 17, 53, 55	EG2, EXM	DGZ		SCREW, [4.2x13]
-8	06104566AA	2	2, 3, 6, 7	L		EG2, EXM	DGZ		SCREW, Tapping, [4.2x13]
9	05120249AA	2	2, 3, 6, 7	L		EG2, EXM	DGZ		RETAINER
10	05097674AA	2	2, 3, 6, 7	L	13, 15, 17, 53, 55	EG2, EXM	DGZ		NUT, Hex, Terminal Block To Seat Box [M6]
-11	05104660AA	4	2, 3, 6, 7	L	13, 15, 17, 53, 55	EG2, EXM	DGZ		NUT, Terminal Block To Seat Box [M4]
12									RELAY
	05103560AA	1	2, 3, 6, 7	L	13, 15, 17, 53, 55	EG2, EXM	DGZ		[HDC / HDB / 3JV / XG3 / HAB] / [K15/3 Pos. 7]
		1	2, 3, 6, 7	L	13, 15, 17, 53, 55	EG2, EXM	DGZ		[3EN] / Circuit [15 K88, Pos1]
		1	2, 3, 6, 7	L	13, 15, 17, 53, 55	EG2, EXM	DGZ		[JHT] / [K2, Pos. 4]
		1	2, 3, 6, 7	L	13, 15, 17, 53, 55	EG2, EXM	DGZ		[LCQ] / [GEX]
13									RELAY
	05101505AA	1	2, 3, 6, 7	L	13, 15, 17, 53, 55	EG2, EXM	DGZ		With [GFA] Or With [GFA + LSA]
		1	2, 3, 6, 7	L	13, 15, 17, 53, 55	EG2, EXM	DGZ		With [GBG]
		1	2, 3, 6, 7	L	13, 15, 17, 53, 55	EG2, EXM	DGZ		With [HDB] And Or [XG3] + [HAB]
		1	2, 3, 6, 7	L	13, 15, 17, 53, 55	EG2, EXM	DGZ		With [BNB]
	05103560AA	1	2, 3, 6, 7	L	15, 17, 53, 55, 13	EG2, EXM	DGZ		Revolving Signal Lamp
	05120360AB	1	2, 3, 6, 7	L		EG2	DGZ		With [GBG, XFK, DGZ, XEY, 3EN, XBE, XA3, NHX, CK7, XFM, NXF, GEH]
		1	2, 3, 6, 7	L		EG2, EXM	DGZ		Secondary Air Pump [EG2]
14	68013383AA	1	2, 3, 6, 7	L	13, 15, 17, 53, 55	EG2, EXM	DGZ		MODULE, With [XCF, NXF]

SPRINTER (VB)

SERIES	LINE	BODY	ENGINE	TRANSMISSION
L = LOWLINE	3 = HD DODGE 2WD 2 = Med. Duty DODGE 2WD	03 = CAB CHASSIS WHEEL BASE 3 05 = CAB CHASSIS WHEEL BASE 5 13 = 119 WB 53 = 119 WB 15 = VAN WHEEL BASE 5 55 = WAGON WHEEL BASE 5 17 = VAN WHEEL BASE 7	EG2 = 3.5L V6 Gas Engine EXM = 3.0L V6 Turbo Diesel Engine	DGZ = 5-Speed Auto W5A380 Transmission

Relay, Fusebox And Control Modules Seat Frame
Figure 8-510

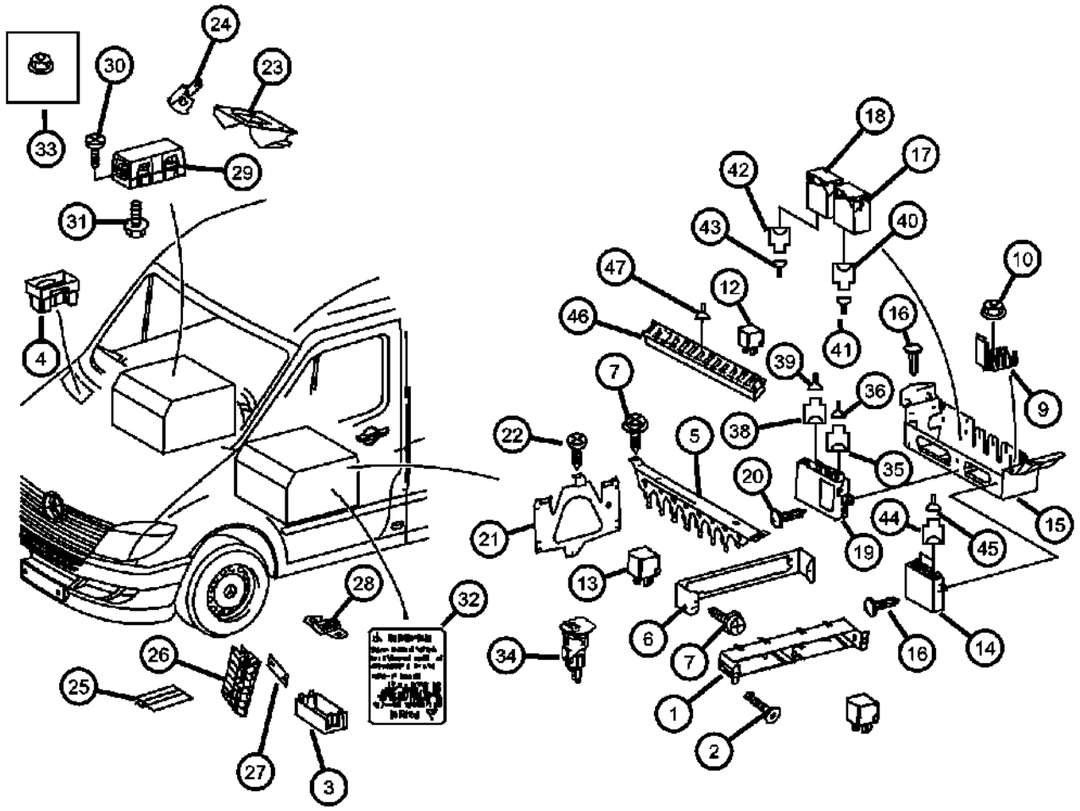

ITEM	PART NUMBER	QTY	LINE	SERIES	BODY	ENGINE	TRANS	TRIM	DESCRIPTION
15	68013390AA	1	2, 3, 6, 7	L		EG2, EXM	DGZ		BLOCK, Fuse, Control Unit Holder
16	06104566AA	3	2, 3, 6, 7	L	13, 15, 17, 53, 55	EG2, EXM	DGZ		SCREW, Tapping, [4.2x13]
17	05139996AA	1	2, 3, 6, 7	L	13, 15, 17, 53, 55	EG2, EXM	DGZ		FLASHER MODULE, FLASHER MODULE-TURN SIGNAL
18	68013386AA	1	2, 3, 6, 7	L		EG2, EXM	DGZ		MODULE, HID Ballast
19	68013388AA	1	2, 3, 6, 7	L	13, 15, 17, 53, 55	EG2, EXM	DGZ		MODULE, Trailer Tow
20	06104566AA	2	2, 3, 6, 7	L	13, 15, 17, 53, 55	EG2, EXM	DGZ		SCREW, Tapping, [4.2x13]
21	68013405AA	1	2, 3, 6, 7	L	13, 15, 17, 53, 55	EG2, EXM	DGZ		BRACKET
22	06104566AA	2	2, 3, 6, 7	L		EG2, EXM	DGZ		SCREW, Tapping
23	68020664AA	1	2, 3, 6, 7	L		EG2, EXM	DGZ		BRACKET, Prefuse Box
24	68018580AA	1	2, 3, 6, 7	L		EG2, EXM	DGZ		BRACKET, Prefuse Box Bracket Suport
25	68015892AA	1	2, 3, 6, 7	L		EG2, EXM	DGZ		COVER, Prefuse Box Cover
26	68015893AA	1	2, 3, 6, 7	L		EG2, EXM	DGZ		HOLDER, Fuse, Prefuse / Fuse Box
27	68015894AA	1	2, 3, 6, 7	L		EG2, EXM	DGZ		FUSE, Holder, Contact Rail / Prefuse Box
28									FUSE
	05104596AA	1	2, 3, 6, 7	L		EG2, EXM	DGZ		[200A]
	68011191AA	AR	2, 3, 6, 7	L		EG2, EXM	DGZ		[40A / F59]
	68011192AA	AR	2, 3, 6, 7	L		EG2, EXM	DGZ		[80A / F59]
	68011194AA	99	2, 3, 6, 7	L		EG2, EXM	DGZ		[150A / F59]
29	68025370AA	1	2, 3, 6, 7	L		EG2, EXM	DGZ		COVER, Fuse Box
30	06104566AA	2	7, 2, 3, 6	L		EG2, EXM	DGZ		SCREW, Tapping
31	06104709AA	2	2, 3, 6, 7	L	13, 15, 17, 53, 55	EG2, EXM	DGZ		NUT, Hex Flange, M8x1.25
32									LABEL, Warning
	05121112AA	1	2, 3, 6, 7	L	13, 15, 17, 53, 55	EG2	DGZ		
	68006926AA	1	2, 3, 6, 7	L		EXM	DGZ		
33	68004878AA	2	2, 3, 6, 7	L	13, 15, 17, 53, 55	EG2, EXM	DGZ		NUT
34	68011041AA	1	2, 3, 6, 7	L		EG2, EXM	DGZ		POWER OUTLET
35									CONNECTOR

SPRINTER (VB)

SERIES	LINE	BODY	ENGINE	TRANSMISSION
L = LOWLINE	3 = HD DODGE 2WD 2 = Med. Duty DODGE 2WD	03 = CAB CHASSIS WHEEL BASE 3 05 = CAB CHASSIS WHEEL BASE 5 13 = 119 WB 53 = 119 WB 15 = VAN WHEEL BASE 5 55 = WAGON WHEEL BASE 5 17 = VAN WHEEL BASE 7	EG2 = 3.5L V6 Gas Engine EXM = 3.0L V6 Turbo Diesel Engine	DGZ = 5-Speed Auto W5A380 Transmission

Relay, Fusebox And Control Modules Seat Frame
Figure 8-510

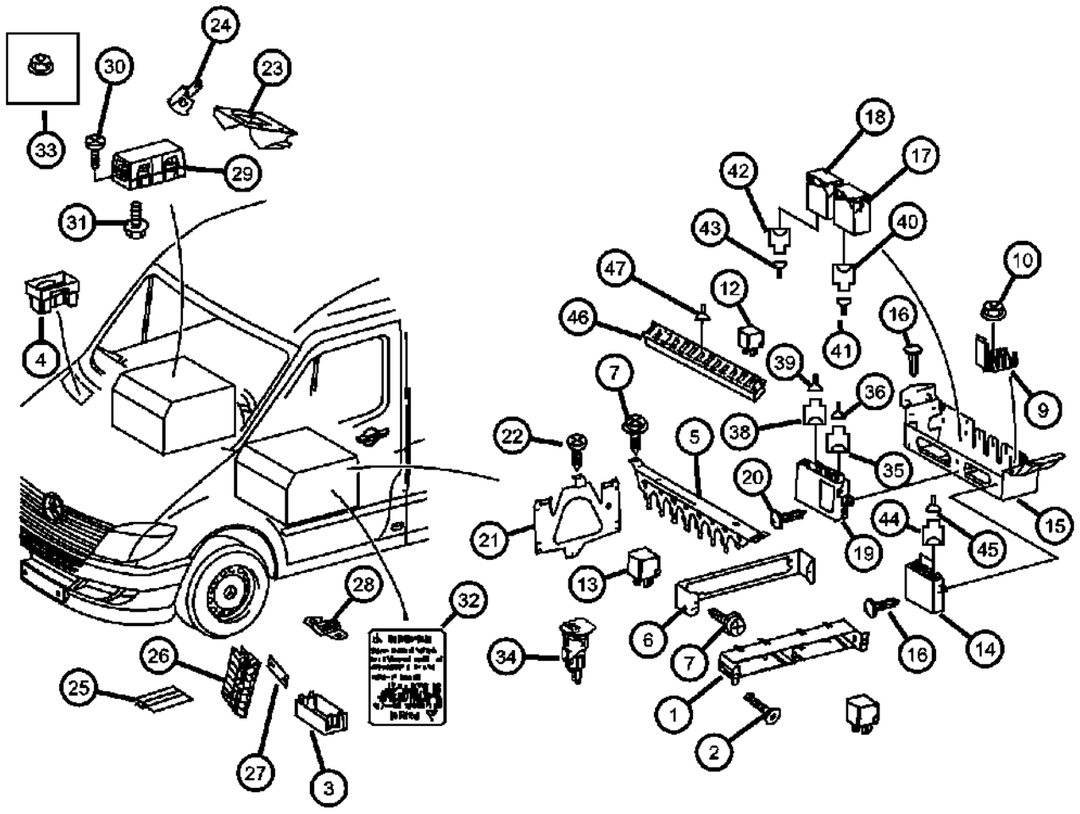

ITEM	PART NUMBER	QTY	LINE	SERIES	BODY	ENGINE	TRANS	TRIM	DESCRIPTION
	68011235AA	1	2, 3, 6, 7	L		EG2, EXM	DGZ		[4 Pin: N28/1]
	68011247AA	1	2, 3, 6, 7	L		EG2, EXM	DGZ		[4 Pin: N28/1] Control Unit Trailer Recognition Connector
36	68011247AA	1	2, 3, 6, 7	L		EG2, EXM	DGZ		CONNECTOR, Terminal, Terminal / [0.75 - 1.0 MM2; SLK N28/1]
-37									TERMINAL
	05143897AA	AR	2, 3, 6, 7	L	53, 55, 03, 05	EG2, EXM	DGZ		[1.5 - 2.5 MM2; SLK; N28/1]
		AR	2, 3, 6, 7	L	13, 15, 17	EG2, EXM	DGZ		[1.5 - 2.5 MM2; SLK; N28/1]
38	68011195AA	1	2, 3, 6, 7	L		EG2, EXM	DGZ		CONNECTOR, [8 Pin; N28/1] Control Unit Recognition Connector
39	05103873AA	3	2, 3, 6, 7	L	13, 15, 17, 53, 55	EG2, EXM	DGZ		TERMINAL, [0.75 MM2 MQS; N28/1]
40	68011399AA	1	2, 3, 6, 7	L		EG2, EXM	DGZ		CONNECTOR, [21 Pin; N9/1] Additional Flasher Module
41									TERMINAL
	05103892AA	1	2, 3, 6, 7	L		EG2, EXM	DGZ		[0.5 - 1.0 MM2 MCP; N9/1]
	05103893AA	AR	2, 3, 6, 7	L		EG2, EXM	DGZ		[1.5 - 2.5 MM2 MCP; N9/1]
42									CONNECTOR
	68011083AA	1	2, 3, 6, 7	L		EG2, EXM	DGZ		[26 Pol / N71] Headlamp Leveling System
	68011190AA	1	2, 3, 6, 7	L		EG2, EXM	DGZ		[26 Pol / N71] Contact Carrier
43	05103873AA	AR	2, 3, 6, 7	L		EG2, EXM	DGZ		TERMINAL, [0.75 MM2 MQS; N71]
44	68011399AA	1	2, 3, 6, 7	L		EG2, EXM	DGZ		CONNECTOR, Parameterizable Special Module [PSM] Control Unit [21 Pin; N26/15]
45									TERMINAL
	05103882AA	1	2, 3, 6, 7	L					[0.5 - 1.0 MM2 MCP; N26/15]
	05103893AA	AR	2, 3, 6, 7	L		EG2, EXM	DGZ		[1.5 - 2.5 MM2 MCP; N26/15]
46	05120374AA	1	2, 3, 6, 7	L		EG2, EXM	DGZ		CONNECTOR, Relay Support
47									TERMINAL, Female
	05133360AA	AR	2, 3, 6, 7	L		EG2, EXM	DGZ		[K100/1]
	05133362AA	AR	2, 3, 6, 7	L		EG2, EXM	DGZ		[1 - 2.5 MM2; K100/1]

SPRINTER (VB)

SERIES	LINE	BODY	ENGINE	TRANSMISSION
L = LOWLINE	3 = HD DODGE 2WD 2 = Med. Duty DODGE 2WD	03 = CAB CHASSIS WHEEL BASE 3 05 = CAB CHASSIS WHEEL BASE 5 13 = 119 WB 53 = 119 WB 15 = VAN WHEEL BASE 5 55 = WAGON WHEEL BASE 5 17 = VAN WHEEL BASE 7	EG2 = 3.5L V6 Gas Engine EXM = 3.0L V6 Turbo Diesel Engine	DGZ = 5-Speed Auto W5A380 Transmission

Brake Pad Wear Indicator & Speed Sensor
Figure 8-610

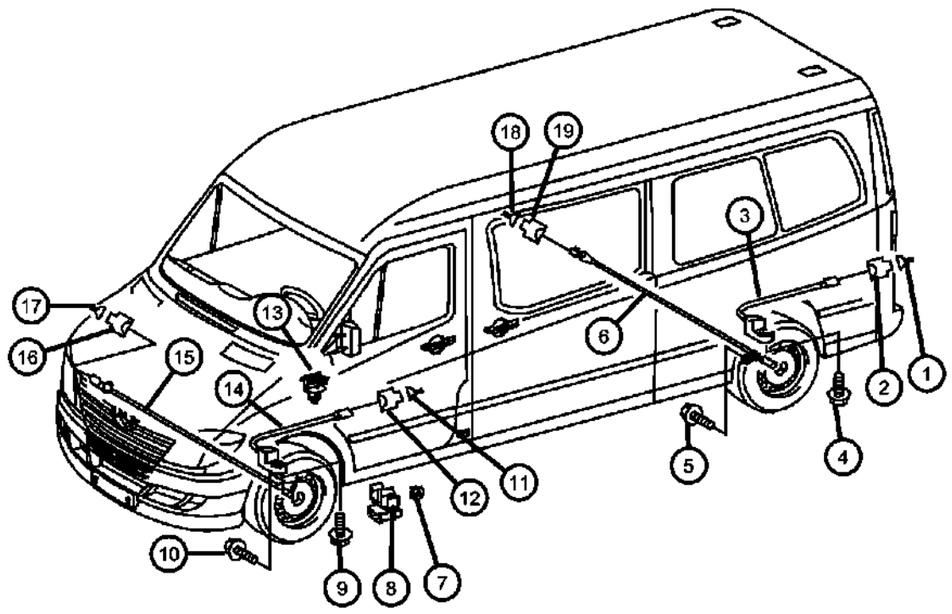

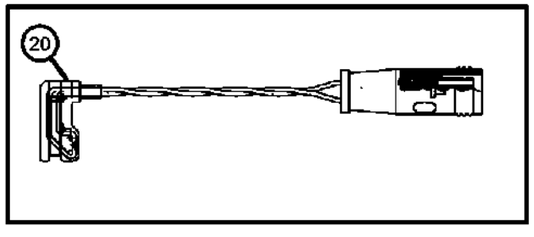

ITEM	PART NUMBER	QTY	LINE	SERIES	BODY	ENGINE	TRANS	TRIM	DESCRIPTION
1	05103874AA	1	2, 3, 6, 7	L		EG2, EXM	DGZ		TERMINAL
2	68011299AA	4	2, 3, 6, 7	L		EG2, EXM	DGZ		CONNECTOR, Rear Axle Brake Lining Wear Indicator 2-PIN;X88/15;X88/16
3									WIRING, Brake Indicator
	68013838AA	2	2, 6	L		EG2, EXM	DGZ		On Rear Axle
	68013839AA	2	3, 7	L		EG2, EXM	DGZ		On Rear Axle
4									SCREW
	06104076AA	2	3, 7	L	03, 05	EG2, EXM	DGZ		Fastening Sensor to Rear Axle M6x16
		2	2, 3, 6, 7	L	13, 15, 17, 53, 55	EG2, EXM	DGZ		Fastening Sensor to Rear Axle M6x16
5									SCREW
	06104076AA	2	3, 7	L	03, 05	EG2, EXM	DGZ		Sensor to Rear Axle M6x16
		2	2, 3, 6, 7	L	13, 15, 17, 53, 55	EG2, EXM	DGZ		Sensor to Rear Axle M6x16
6									SENSOR, Wheel Speed
	68013830AA	1	2, 6	L	13, 15, 17, 53, 55	EG2, EXM	DGZ		Rear Left
	68013831AA	1	3, 7	L	03, 05, 13, 15, 17	EG2, EXM	DGZ		Rear Left
	68013832AA	1	2, 6	L	13, 15, 17, 53, 55	EG2, EXM	DGZ		Rear, Right
	68013833AA	1	3, 7	L	03, 05, 13, 15, 17	EG2, EXM	DGZ		Rear, Right
7									NUT, Hex
	05097674AA	2	3, 7	L	03, 05	EG2, EXM	DGZ		Fastening Bracket Left M6
		2	2, 3, 6, 7	L	13, 15, 17, 53, 55	EG2, EXM	DGZ		Fastening Bracket Left M6
8	68013737AA	4	2, 3, 6, 7	L		EG2, EXM	DGZ		BRACKET, Cable Harness to Support
9	06104076AA	2	2, 3, 6, 7	L		EG2, EXM	DGZ		SCREW, Fastening Sensor to Rear Axle M6x16
10	06104076AA	2	2, 3, 6, 7	L		EG2, EXM	DGZ		SCREW, Fastening Sensor to Front Axle M6x16
11	05103874AA	1	2, 3, 6, 7	L		EG2, EXM	DGZ		TERMINAL
12	68011299AA	4	2, 3, 6, 7	L		EG2, EXM	DGZ		CONNECTOR, Front Axle Brake Lining Wear Indicator 2-PIN;X88/13;X88/14
13									CLIP, Retainer

SPRINTER (VB)

SERIES	LINE	BODY	ENGINE	TRANSMISSION
L = LOWLINE	3 = HD DODGE 2WD 2 = Med. Duty DODGE 2WD	03 = CAB CHASSIS WHEEL BASE 3 05 = CAB CHASSIS WHEEL BASE 5 13 = 119 WB 53 = 119 WB 15 = VAN WHEEL BASE 5 55 = WAGON WHEEL BASE 5 17 = VAN WHEEL BASE 7	EG2 = 3.5L V6 Gas Engine EXM = 3.0L V6 Turbo Diesel Engine	DGZ = 5-Speed Auto W5A380 Transmission

Brake Pad Wear Indicator & Speed Sensor
Figure 8-610

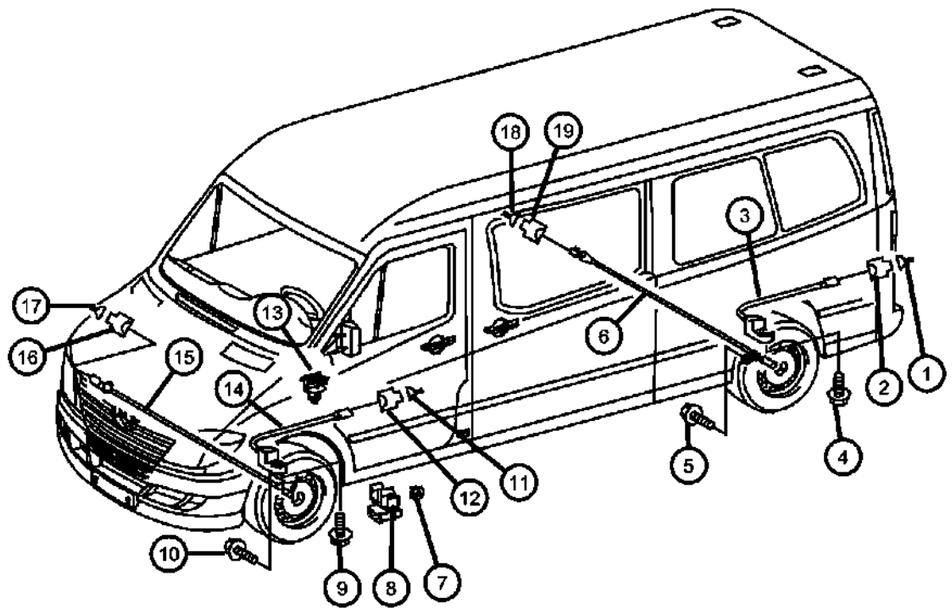

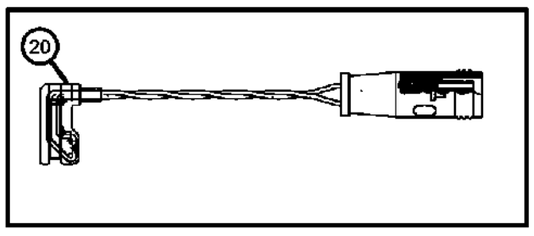

ITEM	PART NUMBER	QTY	LINE	SERIES	BODY	ENGINE	TRANS	TRIM	DESCRIPTION
	68013413AA	1	2, 3, 6, 7	L	13, 15, 17, 53, 55	EG2, EXM	DGZ		
		1	3, 7	L	03, 05	EG2, EXM	DGZ		
14	68013736AA	2	2, 3, 6, 7	L		EG2, EXM	DGZ		WIRING, Brake Indicator, Front Axle Brake Lining Wear Indicator
15	68013735AA	2	2, 3, 6, 7	L		EG2, EXM	DGZ		SENSOR, Wheel Speed, Front Axle
16	05120277AA	1	2, 3, 6, 7	L		EG2, EXM	DGZ		CONNECTOR, Wiring Repair, Left Front RPM Sensor Connector 2-PIN;X62/26;X62/27
17	05103874AA	1	2, 3, 6, 7	L		EG2, EXM	DGZ		TERMINAL
18	05103874AA	1	2, 3, 6, 7	L		EG2, EXM	DGZ		TERMINAL
19	05120277AA	1	2, 3, 6, 7	L		EG2, EXM	DGZ		CONNECTOR, Wiring Repair
20									SENSOR, Brake wear
	68006717AA	4	3, 7	L	03, 05, 13, 15, 17	EG2, EXM	DGZ		[3500] Only / Front & Rear Brake Wear Sensors, Front And Rear
		2	2, 6	L	13, 15, 17, 53, 55	EG2, EXM	DGZ		[2500] Series Front Brake Wear Sensor, Front
	68013762AA	4	2, 6	L	13, 15, 17, 53, 55	EG2, EXM	DGZ		[2500] Only / Rear Brake Wear Sensors, Rear

SPRINTER (VB)

SERIES	LINE	BODY	ENGINE	TRANSMISSION
L = LOWLINE	3 = HD DODGE 2WD 2 = Med. Duty DODGE 2WD	03 = CAB CHASSIS WHEEL BASE 3 05 = CAB CHASSIS WHEEL BASE 5 13 = 119 WB 53 = 119 WB 15 = VAN WHEEL BASE 5 55 = WAGON WHEEL BASE 5 17 = VAN WHEEL BASE 7	EG2 = 3.5L V6 Gas Engine EXM = 3.0L V6 Turbo Diesel Engine	DGZ = 5-Speed Auto W5A380 Transmission

Engine Sensors & Related Parts
Figure 8-620

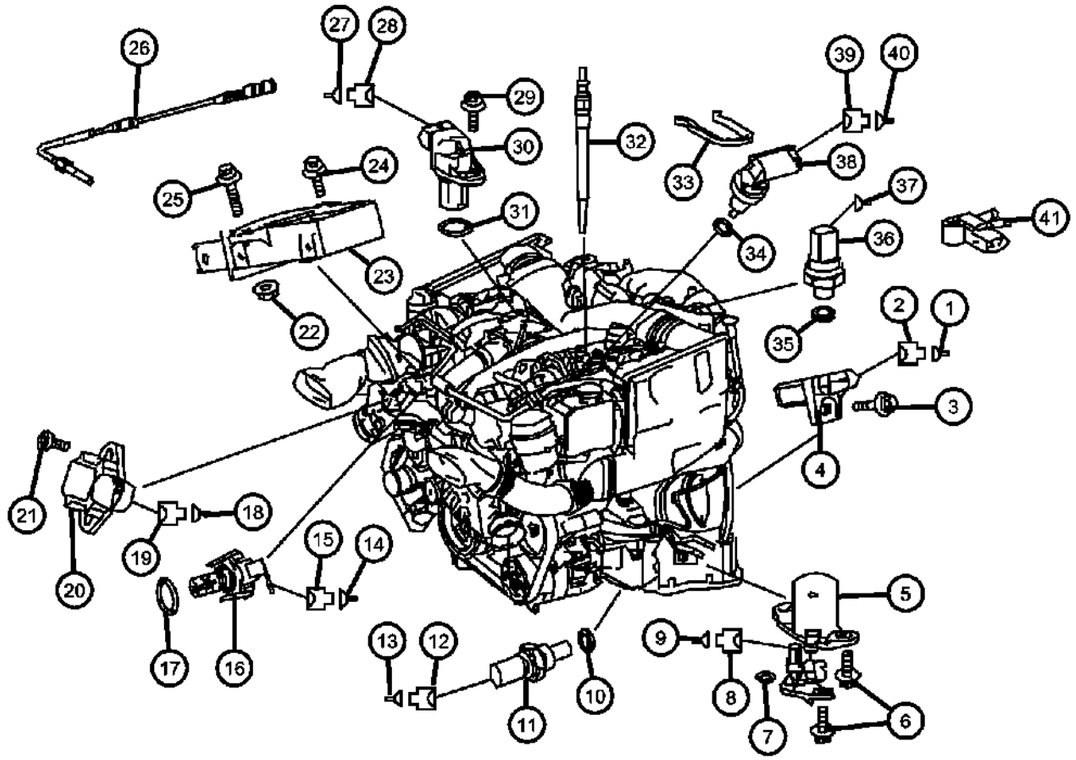

ITEM	PART NUMBER	QTY	LINE	SERIES	BODY	ENGINE	TRANS	TRIM	DESCRIPTION
1	05133353AA	AR	2, 3, 6, 7	L		EXM	DGZ		TERMINAL, [0.25 - 0.50 MM2;L5]
2	05138030AA	4	2, 3, 6, 7	L		EXM	DGZ		CONNECTOR, [3 Pin L5]
3	05179387AA	1	2, 3, 6, 7	L		EXM	DGZ		SCREW, Sender Unit to Cylinder Crankcase [6x16]
4	05175763AA	1	2, 3, 6, 7	L		EG2, EXM	DGZ		SENSOR, Crankshaft Position
5	05137394AB	1	2, 3, 6, 7	L		EXM	DGZ		SENSOR, Oil Level
6	06104682AA	3	2, 3, 6, 7	L		EXM	DGZ		BOLT, Sender Unit To Oil Pan [M6x19]
7	05103567AA	1	2, 3, 6, 7	L		EXM	DGZ		SEAL RING
8	05120278AA	1	2, 3, 6, 7	L		EG2, EXM	DGZ		CONNECTOR
9	68011878AA	AR	2, 3, 6, 7	L		EG2, EXM	DGZ		TERMINAL, [0.22 - 0.5 MM2;S43]
10	06507454AA	1	2, 3, 6, 7	L		EXM	DGZ		WASHER, Banjo
11	05103534AB	1	2, 3, 6, 7	L		EXM	DGZ		SENDING UNIT, Temperature Gauge
12	05120277AA	1	2, 3, 6, 7	L		EG2, EXM	DGZ		CONNECTOR, Wiring Repair
13	05138861AA	AR	2, 3, 6, 7	L		EXM	DGZ		TERMINAL, [0.5 MM2 MQS; B 1]
14	05138861AA	AR	2, 3, 6, 7	L		EXM	DGZ		TERMINAL, [0.5 MM2 MQS; B17]
15	05120277AA	1	2, 3, 6, 7	L		EG2, EXM	DGZ		CONNECTOR, Wiring Repair, Intake Air Temperature Sensor 2-PIN;B17
16	04862635AA	1	2, 3, 6, 7	L		EXM	DGZ		SENSOR, Temperature
17	05179491AA	1	2, 3, 6, 7	L		EXM	DGZ		O RING, [11x2.0MM]
18	05138861AA	AR	2, 3, 6, 7	L		EXM	DGZ		TERMINAL, [.5 MM2 MQS]
19	05120278AA	1	2, 3, 6, 7	L		EG2, EXM	DGZ		CONNECTOR, [3 PIN]
20	05117545AB	1	2, 3, 6, 7	L		EXM	DGZ		SENSOR, MAP
21	06104649AB	2	2, 3, 6, 7	L	13, 15, 17	EG2, EXM	DGZ		SCREW, Pressure Sensor Attachment [K60x16]
22	05097674AA	1	2, 3, 6, 7	L		EXM	DGZ		NUT, Hex
23	68013182AA	1	2, 3, 6, 7	L		EXM	DGZ		MODULE, Glow Plug
24	06104005AA	4	2, 3, 6, 7	L		EXM	DGZ		BOLT, Bracket to Cylinder Head M6x16
25	06104012AA	1	2, 3, 6, 7	L		EXM	DGZ		SCREW
26	68014084AA	1	2, 3, 6, 7	L		EXM	DGZ		SENSOR, Temperature
27	05133353AA	AR	2, 3, 6, 7	L		EXM	DGZ		TERMINAL, [0.25 - 0.5 MM2; B6/1]
28	05138030AA	4	2, 3, 6, 7	L		EXM	DGZ		CONNECTOR, [3 PIN; B6/1]
29	06104682AA	1	2, 3, 6, 7	L		EXM	DGZ		BOLT, [M6x19]

SPRINTER (VB)

SERIES	LINE	BODY	ENGINE	TRANSMISSION
L = LOWLINE	3 = HD DODGE 2WD 2 = Med. Duty DODGE 2WD	03 = CAB CHASSIS WHEEL BASE 3 05 = CAB CHASSIS WHEEL BASE 5 13 = 119 WB 53 = 119 WB 15 = VAN WHEEL BASE 5 55 = WAGON WHEEL BASE 5 17 = VAN WHEEL BASE 7	EG2 = 3.5L V6 Gas Engine EXM = 3.0L V6 Turbo Diesel Engine	DGZ = 5-Speed Auto W5A380 Transmission

AR = use ase required - = Non illustrrated part

<< RETURN TO GROUP INDEX

Engine Sensors & Related Parts
Figure 8-620

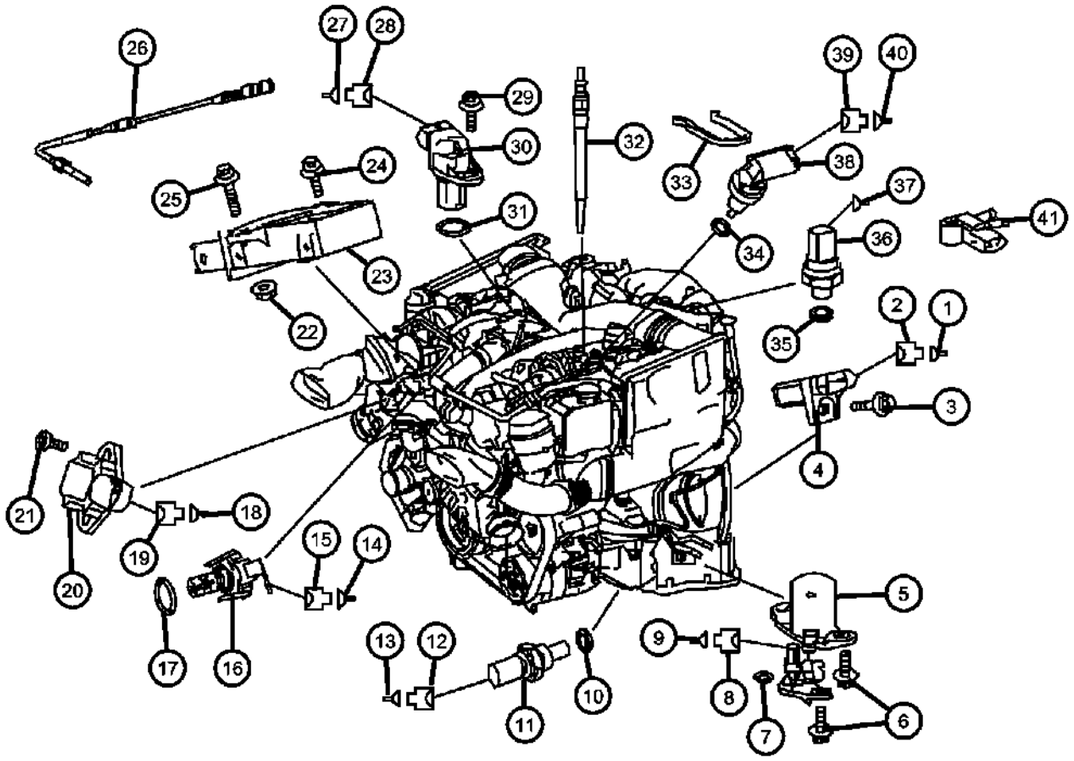

ITEM	PART NUMBER	QTY	LINE	SERIES	BODY	ENGINE	TRANS	TRIM	DESCRIPTION
30	05175762AA	1	2, 3, 6, 7	L		EXM	DGZ		SENSOR, Camshaft
31	05183535AA	1	2, 3, 6, 7	L		EXM	DGZ		O RING
32	05175756AA	6	2, 3, 6, 7	L		EXM	DGZ		GLOW PLUG
33	05080149AA	1	2, 3, 6, 7	L		EXM	DGZ		CLIP
34	05080148AA	1	2, 3, 6, 7	L		EXM	DGZ		O RING
35	05104683AB	1	2, 3, 6, 7	L		EXM	DGZ		O RING, Pressure Sensor
36	05175812AA	1	2, 3, 6, 7	L		EXM	DGZ		SENSOR, Pressure, Exhaust Back Pressure
37	05138861AA	AR	2, 3, 6, 7	L		EXM	DGZ		TERMINAL, [MM2 MQS B60]
38	05175764AA	1	2, 3, 6, 7	L		EG2, EXM	DGZ		SENSOR, Air Temperature, Cooling Water
39	05120277AA	1	2, 3, 6, 7	L		EG2, EXM	DGZ		CONNECTOR, Wiring Repair, Refrigerant Temperature Sensor 2-PIN
40	05138861AA	AR	2, 3, 6, 7	L		EXM	DGZ		TERMINAL, [0.5 MM2 MQS; B 11/4]
41	68012053AA	1	2, 3, 6, 7	L		EXM	DGZ		SENSOR, Pressure, Air Cleaner Maintenance Indication

SPRINTER (VB)

SERIES	LINE	BODY	ENGINE	TRANSMISSION
L = LOWLINE	3 = HD DODGE 2WD 2 = Med. Duty DODGE 2WD	03 = CAB CHASSIS WHEEL BASE 3 05 = CAB CHASSIS WHEEL BASE 5 13 = 119 WB 53 = 119 WB 15 = VAN WHEEL BASE 5 55 = WAGON WHEEL BASE 5 17 = VAN WHEEL BASE 7	EG2 = 3.5L V6 Gas Engine EXM = 3.0L V6 Turbo Diesel Engine	DGZ = 5-Speed Auto W5A380 Transmission

AR = use ase required - = Non illustrrated part

<< RETURN TO GROUP INDEX

Engine Sensors & Related Parts
Figure 8-630

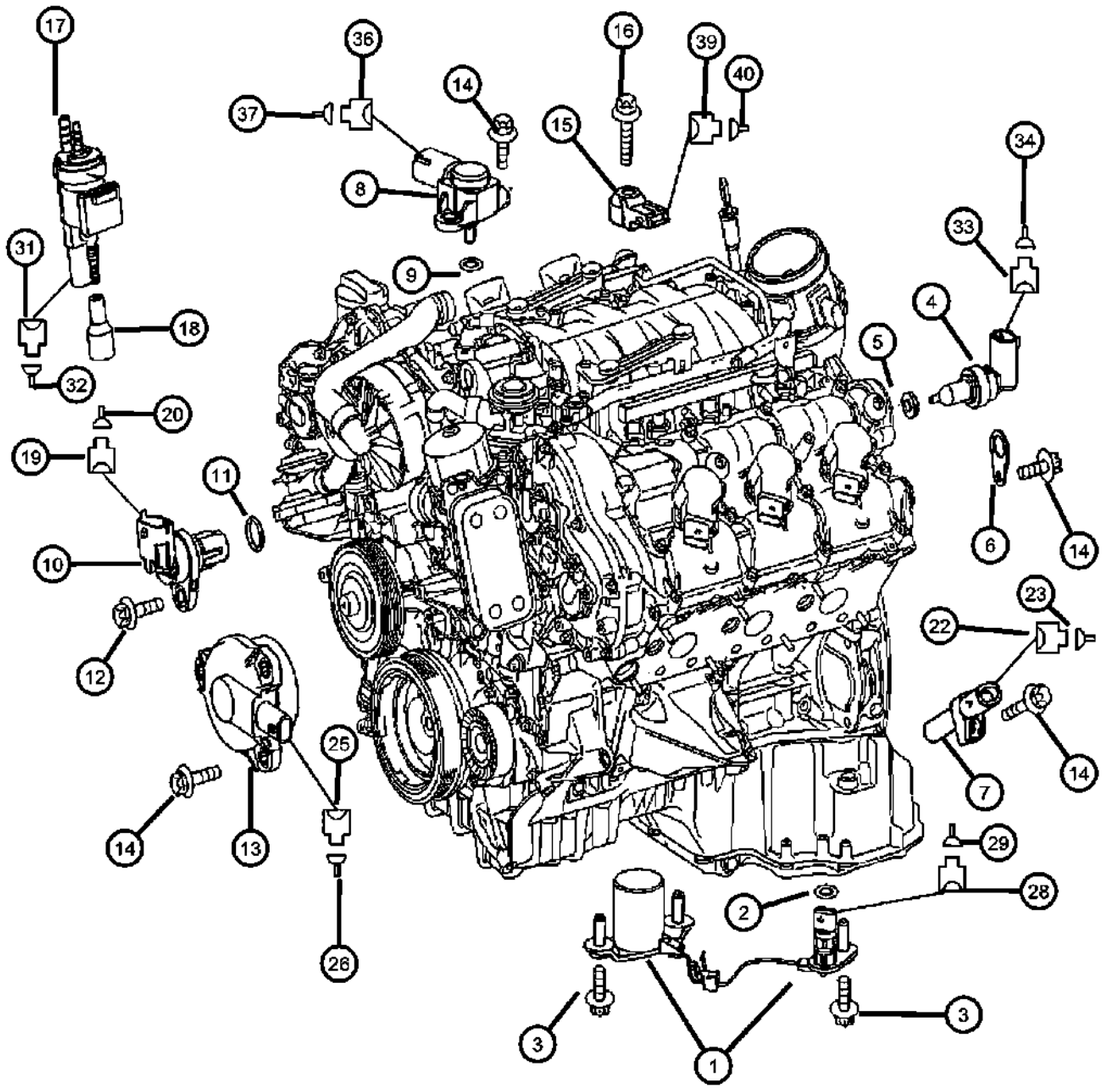

ITEM	PART NUMBER	QTY	LINE	SERIES	BODY	ENGINE	TRANS	TRIM	DESCRIPTION
1	05175760AA	1	2, 3, 6, 7	L		EG2, EXM	DGZ		SENSOR, Oil Level
2	05175761AA	1	2, 3, 6, 7	L		EG2	DGZ		O RING
3	06104682AA	2	2, 3, 6, 7	L		EG2	DGZ		BOLT, Oil Lever Contactor To Oil Pan & Plug To Oil Pan [M6x19]
4	05175764AA	1	2, 3, 6, 7	L		EG2, EXM	DGZ		SENSOR, Air Temperature
5	05080148AA	1	2, 3, 6, 7	L		EG2	DGZ		O RING
6	68011850AA	1	2, 3, 6, 7	L		EG2	DGZ		BRACKET
7	05175763AA	1	2, 3, 6, 7	L		EG2, EXM	DGZ		SENSOR, Crankshaft Position
8	05101120AB	1	2, 3, 6, 7	L		EG2	DGZ		SENSOR, Air Pressure, Cylinder Cover, Right
9	05101160AA	1	2, 3, 6, 7	L		EG2	DGZ		O RING
10	05137706AA	4	2, 3, 6, 7	L		EG2	DGZ		SENSOR, Camshaft, Cylinder Cover, Left
11	05101153AA	4	2, 3, 6, 7	L		EG2	DGZ		O RING
12	06104076AA	4	2, 3, 6, 7	L		EG2	DGZ		SCREW, Camshaft Sensor To Cylinder Cover [M6x16]
13	68011851AA	4	2, 3, 6, 7	L		EG2	DGZ		ADJUSTER, Camshaft Adjuster
14	06104142AA	1	2, 3, 6, 7	L		EG2	DGZ		SCREW, Sensor To Engine [M6x16]
15	68011852AA	2	2, 3, 6, 7	L		EG2	DGZ		SENSOR, Knock
16	06104089AA	2	2, 3, 6, 7	L		EG2	DGZ		BOLT
17	05099822AA	1	2, 3, 6, 7	L		EG2	DGZ		SOLENOID, Vacuum
18	05097188AA	1	2, 3, 6, 7	L		EG2	DGZ		BOOT, Air Injection Valve
19									CONNECTOR
	05138030AA	4	2, 3, 6, 7	L		EG2	DGZ		Hall Type Sensor Camshaft [3 PIN ; B6/4 - B6/7]
	05143908AA	4	2, 3, 6, 7	L		EG2	DGZ		Hall Type Sensor Camshaft [B6/4 - B6/7]
20	05133353AA	AR	2, 3, 6, 7	L		EG2	DGZ		TERMINAL, [0.5 - 1.0 MM2; B6/4 - B6/7]
-21	05103663AA	AR	2, 3, 6, 7	L		EG2	DGZ		GROMMET, [0.25 - 1.0 MMS; B6/4 - B6/7]
22									CONNECTOR
	05143908AA	1	2, 3, 6, 7	L		EG2	DGZ		[L5]
	05138030AA	1	2, 3, 6, 7	L		EG2	DGZ		[3 Pin L5]
23	05133353AA	AR	2, 3, 6, 7	L		EG2	DGZ		TERMINAL, [0.5 - 1.0 MM2; L5]
-24	05103663AA	AR	2, 3, 6, 7	L		EG2	DGZ		GROMMET, [0.25 - 1.0 MM2; L5]

SPRINTER (VB)

SERIES	LINE	BODY	ENGINE	TRANSMISSION
L = LOWLINE	3 = HD DODGE 2WD 2 = Med. Duty DODGE 2WD	03 = CAB CHASSIS WHEEL BASE 3 05 = CAB CHASSIS WHEEL BASE 5 13 = 119 WB 53 = 119 WB 15 = VAN WHEEL BASE 5 55 = WAGON WHEEL BASE 5 17 = VAN WHEEL BASE 7	EG2 = 3.5L V6 Gas Engine EXM = 3.0L V6 Turbo Diesel Engine	DGZ = 5-Speed Auto W5A380 Transmission

AR = use ase required - = Non illustrrated part

<< RETURN TO GROUP INDEX

Engine Sensors & Related Parts
Figure 8-630

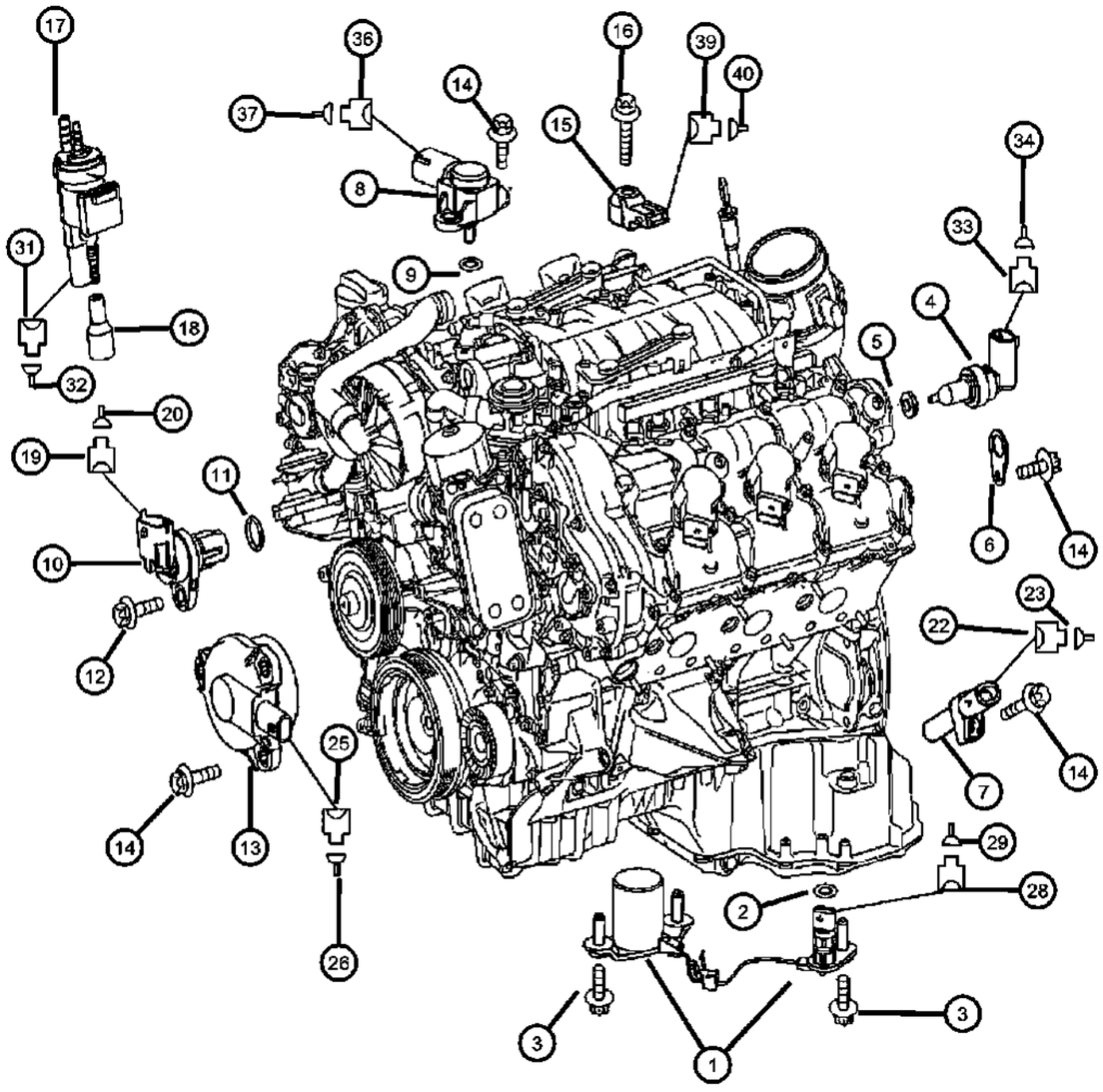

ITEM	PART NUMBER	QTY	LINE	SERIES	BODY	ENGINE	TRANS	TRIM	DESCRIPTION
25	68011798AA	4	2, 3, 6, 7	L		EG2	DGZ		CONNECTOR, [Y49/4 - Y49/7]
26	68011877AA	AR	2, 3, 6, 7	L		EG2	DGZ		TERMINAL, [Y49/4 - Y49-7]
-27	68011050AA	AR	2, 3, 6, 7	L		EG2	DGZ		GASKET, [Y49/4 - Y49/7]
28	68011243AA	1	2, 3, 6, 7	L		EG2	DGZ		CONNECTOR, Oil Lever Sending Unit [S43]
29	68011878AA	AR	2, 3, 6, 7	L		EG2, EXM	DGZ		TERMINAL, [0.22 - 0.5 MM2; S43]
-30	68011050AA	AR	2, 3, 6, 7	L		EG2	DGZ		GASKET, Oil Sending Unit [S43]
31	05120277AA	1	2, 3, 6, 7	L		EG2, EXM	DGZ		CONNECTOR, Wiring Repair, [2 Pin: Y59/2]
32	05138861AA	AR	7, 2, 3, 6	L		EG2	DGZ		TERMINAL, [0.5 MM2 MQS; Y59/2]
33	05120277AA	1	2, 3, 6, 7	L		EG2, EXM	DGZ		CONNECTOR, Wiring Repair, [2 Pin; B11/4]
34	05138861AA	AR	2, 3, 6, 7	L		EG2	DGZ		TERMINAL, [0.5 MM2 MQS; B11/4]
-35	05120859AA	99	2, 3, 6, 7	L		EG2	DGZ		GASKET, [0.9 - 1.3; MM2 B11/4]
36	05120278AA	1	2, 3, 6, 7	L		EG2	DGZ		CONNECTOR, [3 Pin; B28]
37	05138861AA	AR	2, 3, 6, 7	L		EG2	DGZ		TERMINAL, [0.5 MM2 MQS; B28]
-38	05120859AA	99	2, 3, 6, 7	L		EG2	DGZ		GASKET, [0.9 - 1.3 MM2; B28]
39	05143904AA	2	2, 3, 6, 7	L		EG2	DGZ		CONNECTOR, [2 Pin, A16/1, A16/2]
40	05133353AA	AR	2, 3, 6, 7	L		EG2	DGZ		TERMINAL, [0.5 - 1.0 MM2, A16/1 / A16/2]
-41	05103663AA	AR	2, 3, 6, 7	L		EG2	DGZ		GROMMET, [0.25 - 1.0 MM2; A16/1 A16/2]
-42	05159404AA	1	2, 3, 6, 7	L		EG2	DGZ		STRAP, Ground

SPRINTER (VB)

SERIES	LINE	BODY	ENGINE	TRANSMISSION
L = LOWLINE	3 = HD DODGE 2WD 2 = Med. Duty DODGE 2WD	03 = CAB CHASSIS WHEEL BASE 3 05 = CAB CHASSIS WHEEL BASE 5 13 = 119 WB 53 = 119 WB 15 = VAN WHEEL BASE 5 55 = WAGON WHEEL BASE 5 17 = VAN WHEEL BASE 7	EG2 = 3.5L V6 Gas Engine EXM = 3.0L V6 Turbo Diesel Engine	DGZ = 5-Speed Auto W5A380 Transmission

AR = use ase required - = Non illustrrated part

<< RETURN TO GROUP INDEX

Ignition Coil & Spark Plug
Figure 8-640

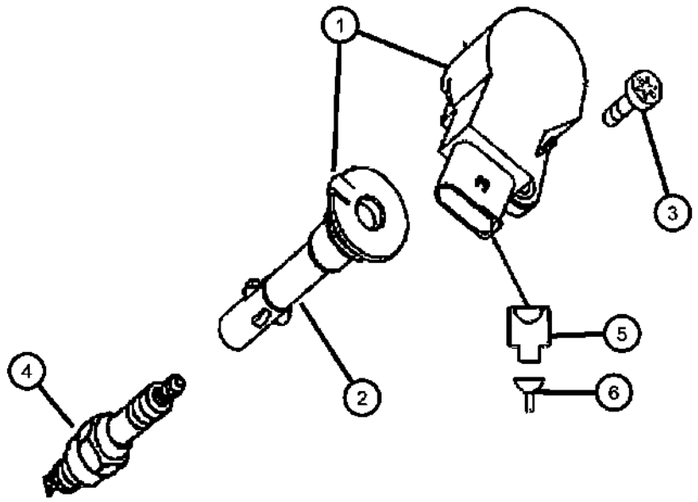

ITEM	PART NUMBER	QTY	LINE	SERIES	BODY	ENGINE	TRANS	TRIM	DESCRIPTION
1	68011844AA	6	2, 3, 6, 7	L		EG2	DGZ		COIL, Ignition
2	68011847AA	6	2, 3, 6, 7	L		EG2	DGZ		CABLE, Ignition Coil
3	06104143AA	12	2, 3, 6, 7	L		EG2	DGZ		SCREW, M6X1.0X20.0
4	68005667AA	3	2, 3, 6, 7	L		EG2	DGZ		SPARKPLUG, Engine
5	68011251AA	6	2, 3, 6, 7	L		EG2	DGZ		CONNECTOR, [4 Pin T1/1- T1/6]
6									TERMINAL
	05103877AA	AR	2, 3, 6, 7	L		EG2	DGZ		[1.5 - 2.5 MM2; T1/1 T1/6]
	05133353AA	AR	2, 3, 6, 7	L		EG2	DGZ		[0.5 - 1.0 MM2; T1/1 - T1/6]
-7									GROMMET
	05103663AA	AR	2, 3, 6, 7	L		EG2	DGZ		[0.25 - 1.0 MM2; T1/1 - T1/6]
	05120864AA	99	2, 3, 6, 7	L		EG2	DGZ		[1.01 - 2.5 MM2; T1/1 - T1/6]

SPRINTER (VB)

SERIES	LINE	BODY	ENGINE	TRANSMISSION
L = LOWLINE	3 = HD DODGE 2WD 2 = Med. Duty DODGE 2WD	03 = CAB CHASSIS WHEEL BASE 3 05 = CAB CHASSIS WHEEL BASE 5 13 = 119 WB 53 = 119 WB 15 = VAN WHEEL BASE 5 55 = WAGON WHEEL BASE 5 17 = VAN WHEEL BASE 7	EG2 = 3.5L V6 Gas Engine EXM = 3.0L V6 Turbo Diesel Engine	DGZ = 5-Speed Auto W5A380 Transmission

Side Impact Airbag Sensors
Figure 8-650

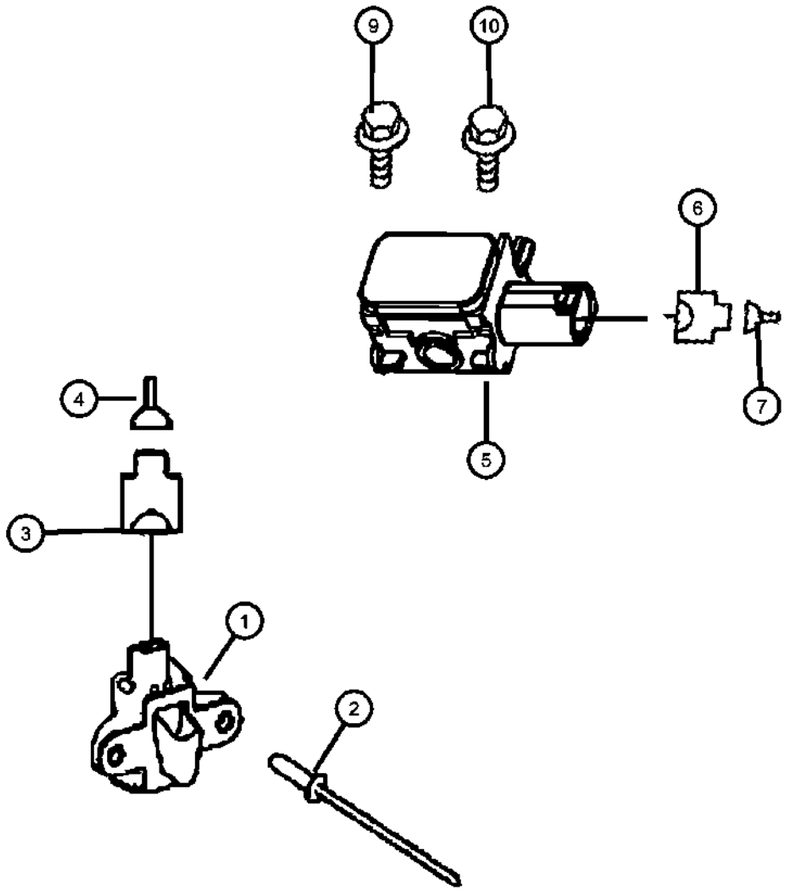

ITEM	PART NUMBER	QTY	LINE	SERIES	BODY	ENGINE	TRANS	TRIM	DESCRIPTION
1	68010057AA	2	2, 3, 6, 7	L		EG2, EXM	DGZ		SENSOR, Side Airbag Impact, Front Door Mounted Sensor, Front Door Side Air Bags / Front Door Mounted, Right & Left
2	68005431AA	2	2, 3, 6, 7	L		EG2, EXM	DGZ		RIVET, Sensor Mounting
3	68011227AA	1	2, 3, 6, 7	L		EG2, EXM	DGZ		CONNECTOR, [3 Pin / B48/7]
4									TERMINAL
	05103873AA	3	3, 7	L	03, 05	EG2, EXM	DGZ		[0.75 MM2 MSQ; B48/7]
		3	2, 3, 6, 7	L	13, 15, 17, 53, 55	EG2, EXM	DGZ		[0.75 MM2 MSQ; B48/7]
5	68013424AA	2	2, 3, 6, 7	L		EG2, EXM	DGZ		SENSOR, Side Airbag Impact, Body Mounted Sensor, Window & Thorax Air Bag Sensor
6	68011282AA	2	2, 3, 6, 7	L		EG2, EXM	DGZ		CONNECTOR, [2 Pin A53/A54]
7	05103874AA	1	2, 3, 6, 7	L		EG2, EXM	DGZ		TERMINAL, [0.75 MM2 A53/A54]
-8	05120860AA	1	2, 3, 6, 7	L		EG2, EXM	DGZ		GASKET, [1.6 - 1.9MM2 / A53/A54]
9	06104188AA	1	2, 3, 6, 7	L		EXM	DGZ		SCREW, Control Unit To Bracket [6x55]
10	06104004AA	1	2, 3, 6, 7	L		EG2	DGZ		BOLT, Control Unit To Floor [6x12]

SPRINTER (VB)

SERIES	LINE	BODY	ENGINE	TRANSMISSION
L = LOWLINE	3 = HD DODGE 2WD 2 = Med. Duty DODGE 2WD	03 = CAB CHASSIS WHEEL BASE 3 05 = CAB CHASSIS WHEEL BASE 5 13 = 119 WB 53 = 119 WB 15 = VAN WHEEL BASE 5 55 = WAGON WHEEL BASE 5 17 = VAN WHEEL BASE 7	EG2 = 3.5L V6 Gas Engine EXM = 3.0L V6 Turbo Diesel Engine	DGZ = 5-Speed Auto W5A380 Transmission

Engine Control Module
Figure 8-710

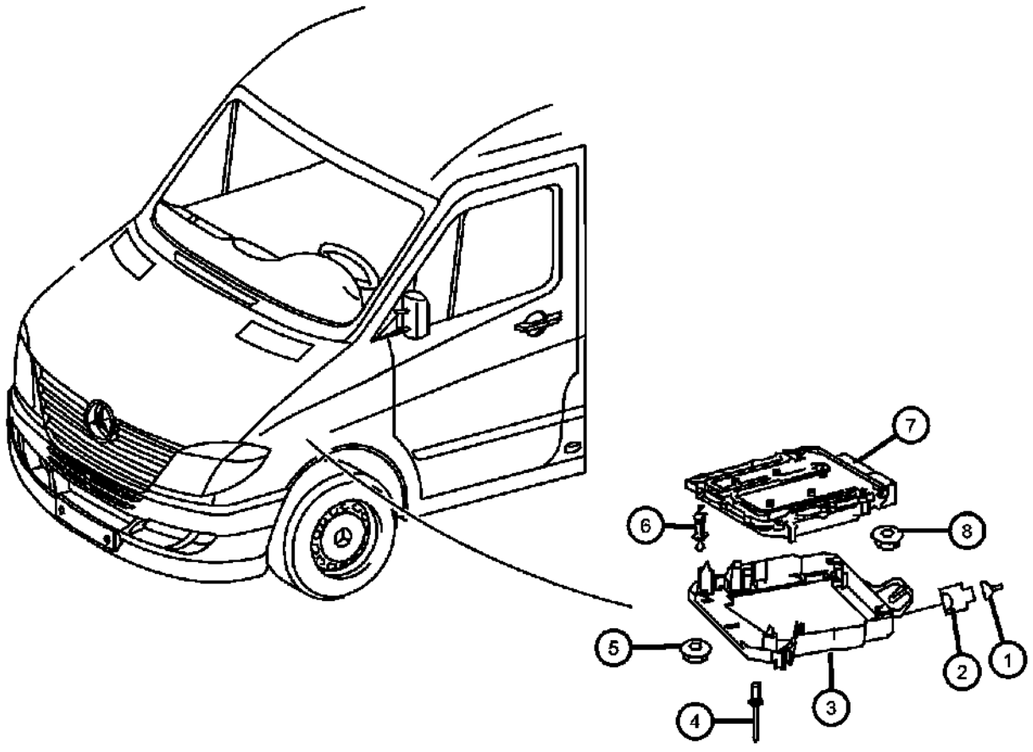

ITEM	PART NUMBER	QTY	LINE	SERIES	BODY	ENGINE	TRANS	TRIM	DESCRIPTION
1									TERMINAL
	05103873AA	3	3, 7	L	03, 05	EG2, EXM	DGZ		
		3	2, 3, 6, 7	L	13, 15, 17, 53, 55	EG2, EXM	DGZ		
2	05120278AA	1	2, 3, 6, 7	L		EG2	DGZ		CONNECTOR
3	68013397AA	1	2, 3, 6, 7	L		EXM	DGZ		BRACKET, Engine Control Module
4	68013397AA	1							RIVET, (NOT SERVICED)
5									NUT
	68004878AA	1	2, 3, 6, 7	L	13, 15, 17, 53, 55	EG2, EXM	DGZ		Bracket to Body M6
		1	3, 7	L	03, 05	EXM	DGZ		Bracket to Body M6
6	68011848AA	2	2, 3, 6, 7	L		EG2	DGZ		RETAINER, Engine Control Module
7									MODULE, Powertrain Control
	68013393AA	1	3, 7	L	03, 05	EG2	DGZ		Up To [08/31/2006]
		1	2, 6	L	13, 15, 17, 53, 55	EG2	DGZ		Up To [08/31/2006]
	68018165AA	1	2, 3, 6, 7	L		EXM	DGZ		Up To [01/31/2007]
	68022860AA	1	2, 3, 6, 7	L		EG2			After [08/31/2006]
	68028085AA	1	2, 3, 6, 7	L		EXM	DGZ		After [01/31/2007]
8	68004878AA	4	2, 3, 6, 7	L	13, 15, 17, 53, 55	EG2, EXM	DGZ		NUT, Control Unit Fixture M6

SPRINTER (VB)

SERIES	LINE	BODY	ENGINE	TRANSMISSION
L = LOWLINE	3 = HD DODGE 2WD 2 = Med. Duty DODGE 2WD	03 = CAB CHASSIS WHEEL BASE 3 05 = CAB CHASSIS WHEEL BASE 5 13 = 119 WB 53 = 119 WB 15 = VAN WHEEL BASE 5 55 = WAGON WHEEL BASE 5 17 = VAN WHEEL BASE 7	EG2 = 3.5L V6 Gas Engine EXM = 3.0L V6 Turbo Diesel Engine	DGZ = 5-Speed Auto W5A380 Transmission

Switches - Instrument Panel / [1 Of 2]
Figure 8-810

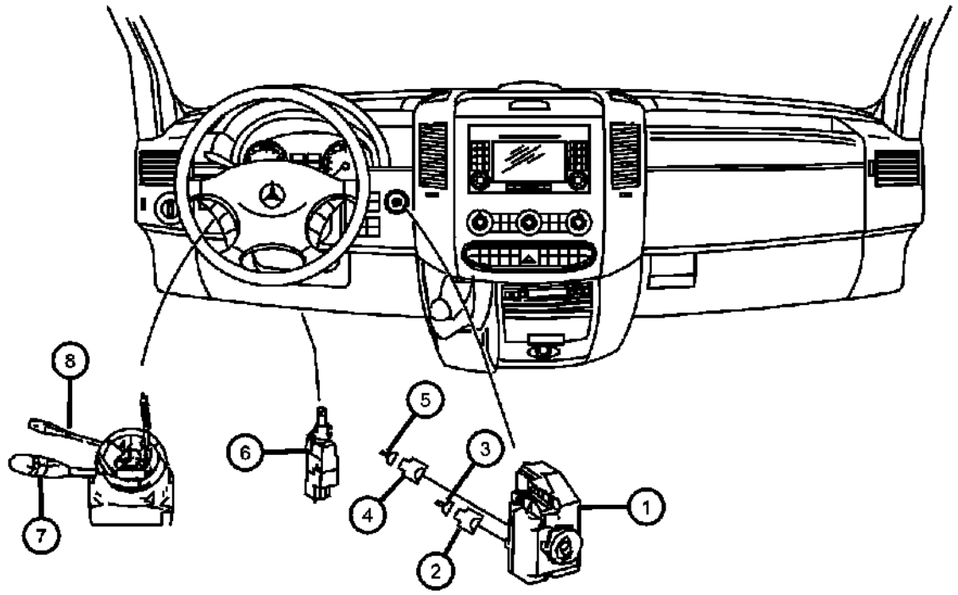

ITEM	PART NUMBER	QTY	LINE	SERIES	BODY	ENGINE	TRANS	TRIM	DESCRIPTION
1	68023969AA	1	2, 3, 6, 7	L		EG2, EXM	DGZ		CYLINDER, Ignition Lock
2									CONNECTOR
	68011195AA	1	2, 3, 6, 7	L		EG2, EXM	DGZ		Ignition Starter Switch Black 8-PIN;N73
	68011198AA	1	2, 3, 6, 7	L		EG2, EXM	DGZ		Ignition Starter Switch Transparent 8-PIN,N73
	68011212AA	1	2, 3, 6, 7	L		EG2, EXM	DGZ		Ignition Starter Switch Blue 8-PIN;COD.C;N73
3									TERMINAL
	05103873AA	3	3, 7	L	03, 05	EG2, EXM	DGZ		
		3	2, 3, 6, 7	L	13, 15, 17, 53, 55	EG2, EXM	DGZ		
4	68011266AA	1	2, 3, 6, 7	L		EG2, EXM	DGZ		CONNECTOR, Ignition Starter Switch Black 5-PIN;N73
5	68016713AA	AR	2, 3, 6, 7	L		EG2, EXM	DGZ		TERMINAL
6	68022569AA	1	2, 3, 6, 7	L		EG2, EXM	DGZ		SWITCH, Stop Lamp
7									SWITCH, Multifunction
	68010448AA	1	2, 3, 6, 7	L		EG2, EXM	DGZ		Without [NHM]
	68010449AA	1	2, 3, 6, 7	L		EG2, EXM	DGZ		With [NHM]
	68026805AA	1	2, 3, 6, 7	L	13, 15, 17, 53, 55	EG2, EXM	DGZ		With [GEH]
	68026806AA	1	2, 3, 6, 7	L		EG2, EXM	DGZ		Without [GEH]
8	68010454AA	1	2, 3, 6, 7	L		EG2, EXM	DGZ		SWITCH, Speed Control, Cruise Control Tempomat

SPRINTER (VB)

SERIES	LINE	BODY	ENGINE	TRANSMISSION
L = LOWLINE	3 = HD DODGE 2WD 2 = Med. Duty DODGE 2WD	03 = CAB CHASSIS WHEEL BASE 3 05 = CAB CHASSIS WHEEL BASE 5 13 = 119 WB 53 = 119 WB 15 = VAN WHEEL BASE 5 55 = WAGON WHEEL BASE 5 17 = VAN WHEEL BASE 7	EG2 = 3.5L V6 Gas Engine EXM = 3.0L V6 Turbo Diesel Engine	DGZ = 5-Speed Auto W5A380 Transmission

Switches - Instrument Panel & Center Console / [2 Of 2]
Figure 8-815

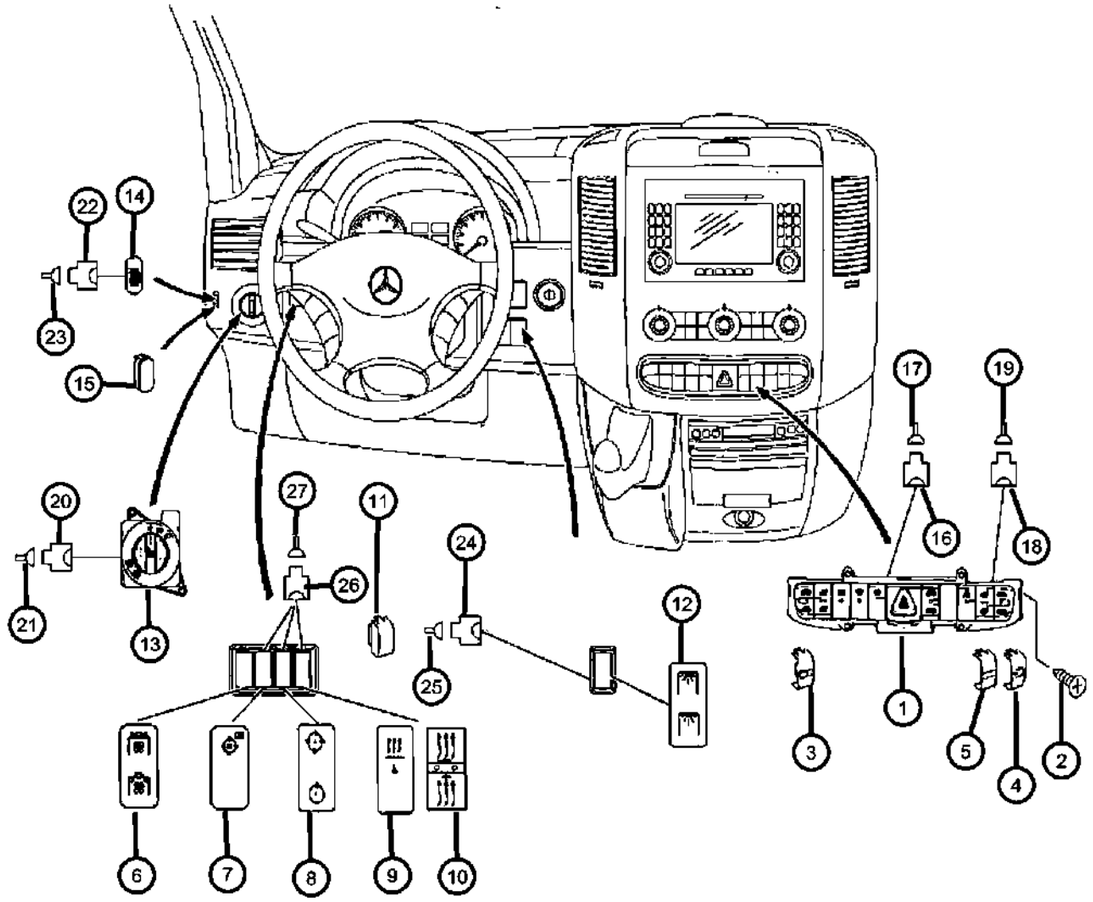

ITEM	PART NUMBER	QTY	LINE	SERIES	BODY	ENGINE	TRANS	TRIM	DESCRIPTION
1									SWITCH, Hazard Warning
	68010482AA	1	2, 3, 6, 7	L		EG2, EXM	DGZ		With [CMC%CMB+XAG%GBG%GFA]
	68010483AA	1	2, 3, 6, 7	L		EG2, EXM	DGZ		With [XAG Or GBG Or GFA]
	68010484AA	1	3, 7	L	03, 05	EG2, EXM	DGZ		With [BNB]
	68010514AA	1	2, 3, 6, 7	L	13, 15, 17, 53, 55	EG2, EXM	DGZ		
	68010515AA	1	2, 6	L	15, 17, 13	EG2, EXM	DGZ		With [46B]
		1	3, 7	L	05	EXM, EG2			With [46B]
2									SCREW, Tapping
	05098128AA	4	3, 7	L	03, 05	EG2, EXM	DGZ		
		4	2, 3, 6, 7	L	13, 15, 17, 53, 55	EG2, EXM	DGZ		
3	68010487AA	1	2, 3, 6, 7	L		EG2, EXM	DGZ		COVER, Switch Opening
4	68010488AA	1	2, 3, 6, 7	L		EG2, EXM	DGZ		COVER, Switch Opening
5	68010489AA	AR	2, 3, 6, 7	L		EG2, EXM	DGZ		COVER, Switch Opening
6	68010516AA	1	2, 3, 6, 7	L	13, 15, 17	EG2, EXM	DGZ		SWITCH, Instrument Panel, With [NHX]
7	68010492AA	1	2, 3, 6, 7	L		EG2, EXM	DGZ		SWITCH, With [XFM % NXF]
8	68010496AA	1	2, 3, 6, 7	L		EG2, EXM	DGZ		SWITCH, With [NXF]
9	68010500AA	1	2, 3, 6, 7	L		EG2, EXM	DGZ		SWITCH, With [3JV]
10	68010499AA	1	2, 3, 6, 7	L		EG2, EXM	DGZ		SWITCH, Instrument Panel, With [HDB % XG3]
11	68010502AA	7	2, 3, 6, 7	L		EG2, EXM	DGZ		COVER, Switch Opening, Blind Cover
12									SWITCH, Instrument Panel
	68010494AA	1	3, 7	L	03, 05	EG2, EXM	DGZ		With [XZG]
	68010501AA	1	3, 7	L	03, 05	EG2, EXM	DGZ		With [XBE]
	68010517AA	1	2, 3, 6, 7	L	13, 15, 17, 53, 55	EG2, EXM	DGZ		With [LCQ]
13									SWITCH, Headlamp
	68010503AA	1	2, 3, 6, 7	L		EG2, EXM	DGZ		With [LNJ + NHM + 42B]
	68010505AA	1	2, 3, 6, 7	L		EG2, EXM	DGZ		With [LNJ + 42B]
	68010507AA	1	7, 2, 3, 6	L		EG2, EXM	DGZ		With [NHM + 42B]
	68010510AA	1	2, 3, 6, 7	L		EG2, EXM	DGZ		
14	68010511AA	1	2, 3, 6, 7	L		EG2, EXM	DGZ		SWITCH, Headlamp Leveling

SPRINTER (VB)

SERIES	LINE	BODY	ENGINE	TRANSMISSION
L = LOWLINE	3 = HD DODGE 2WD 2 = Med. Duty DODGE 2WD	03 = CAB CHASSIS WHEEL BASE 3 05 = CAB CHASSIS WHEEL BASE 5 13 = 119 WB 53 = 119 WB 15 = VAN WHEEL BASE 5 55 = WAGON WHEEL BASE 5 17 = VAN WHEEL BASE 7	EG2 = 3.5L V6 Gas Engine EXM = 3.0L V6 Turbo Diesel Engine	DGZ = 5-Speed Auto W5A380 Transmission

AR = use ase required - = Non illustrrated part

<< RETURN TO GROUP INDEX

Switches - Instrument Panel & Center Console / [2 Of 2]
Figure 8-815

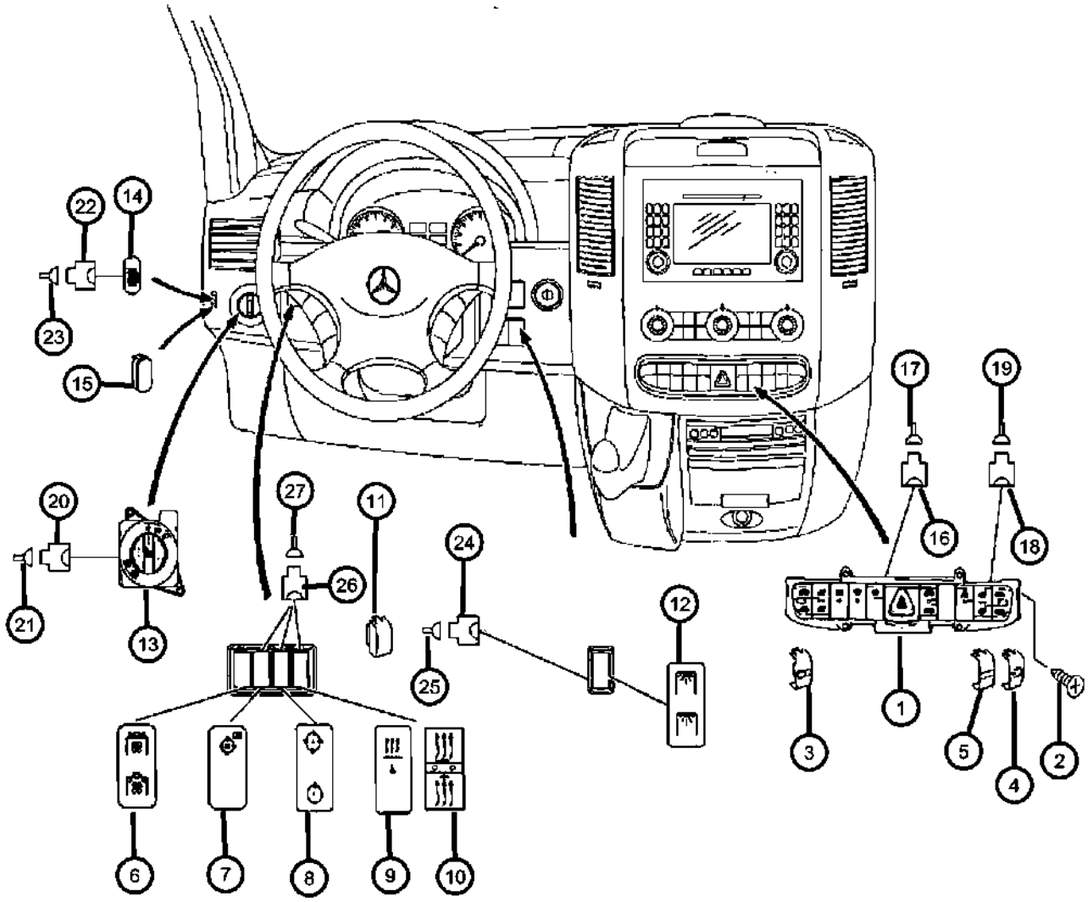

ITEM	PART NUMBER	QTY	LINE	SERIES	BODY	ENGINE	TRANS	TRIM	DESCRIPTION
15	68010512AA	1	2, 3, 6, 7	L		EG2, EXM	DGZ		COVER, Switch Opening
16	68010053AA	1	2, 3, 6, 7	L		EG2, EXM	DGZ		CONNECTOR, Upper Control Panel [8 Fach; N72/1]
17	05103873AA	AR	2, 3, 6, 7	L		EG2, EXM	DGZ		TERMINAL, [0.75 MM2 MQS; N72/1]
18	68011226AA	1	2, 3, 6, 7	L		EG2, EXM	DGZ		CONNECTOR, Upper Control Panel [4 Pin; N72/1]
19	05103882AA	1	2, 3, 6, 7	L					TERMINAL, [0.5 - 1.0 MM2 JPT; N72/1]
20	68011195AA	1	2, 3, 6, 7	L		EG2, EXM	DGZ		CONNECTOR, Light Rotary Switch [8PIN / S1]
21	05103873AA	AR	2, 3, 6, 7	L		EG2, EXM	DGZ		TERMINAL, [0.75 MM2 MQS; S1]
22	05120633AA	AR	2, 3, 6, 7	L		EG2, EXM	DGZ		CONNECTOR, Light Range Regulator [10 Pin S1/1]
23	05103882AA	1	2, 3, 6, 7	L					TERMINAL, [0.5 - 1.0 MM2 JPT; S1/1]
24	05120633AA	AR	2, 3, 6, 7	L		EG2, EXM	DGZ		CONNECTOR, [10 Pin]
25	05103882AA	1	2, 3, 6, 7	L					TERMINAL, [0.5 - 1.0 MM2]
26	05120633AA	AR	2, 3, 6, 7	L		EG2, EXM	DGZ		CONNECTOR, [10 Pin]
27	05103882AA	1	2, 3, 6, 7	L					TERMINAL, [0.5 - 1.0 MM2]

SPRINTER (VB)

SERIES	LINE	BODY	ENGINE	TRANSMISSION
L = LOWLINE	3 = HD DODGE 2WD 2 = Med. Duty DODGE 2WD	03 = CAB CHASSIS WHEEL BASE 3 05 = CAB CHASSIS WHEEL BASE 5 13 = 119 WB 53 = 119 WB 15 = VAN WHEEL BASE 5 55 = WAGON WHEEL BASE 5 17 = VAN WHEEL BASE 7	EG2 = 3.5L V6 Gas Engine EXM = 3.0L V6 Turbo Diesel Engine	DGZ = 5-Speed Auto W5A380 Transmission

AR = use ase required - = Non illustrrated part

<< RETURN TO GROUP INDEX

Door Trim Panel
Figure 8-820

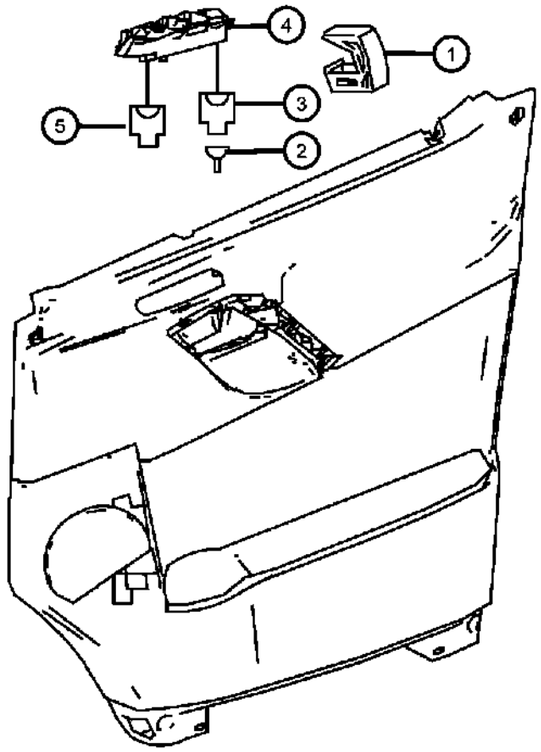

ITEM	PART NUMBER	QTY	LINE	SERIES	BODY	ENGINE	TRANS	TRIM	DESCRIPTION
1	68010052AA	1	2, 3, 6, 7	L		EG2, EXM	DGZ		BRACKET
2	68010054AA	AR	2, 3, 6, 7	L		EG2, EXM	DGZ		TERMINAL
3									CONNECTOR
	05120717AA	1	3, 7	L	03, 05	EG2, EXM	DGZ		Triple 3-PIN,COD.A
		1	2, 3, 6, 7	L	13, 15, 17, 53, 55	EG2, EXM	DGZ		Triple 3-PIN,COD.A
4									SWITCH, Power Window
	68010048AA	1	2, 3, 6, 7	L		EG2, EXM	DGZ		Left
	68010050AA	1	2, 3, 6, 7	L		EG2, EXM	DGZ		With [GTB], Left
	68010051AA	1	2, 6	L	53, 55	EG2, EXM	DGZ		
	68010117AA	1	2, 3, 6, 7	L		EG2, EXM	DGZ		Right
5	68010053AA	1	2, 3, 6, 7	L		EG2, EXM	DGZ		CONNECTOR

SPRINTER (VB)

SERIES	LINE	BODY	ENGINE	TRANSMISSION
L = LOWLINE	3 = HD DODGE 2WD 2 = Med. Duty DODGE 2WD	03 = CAB CHASSIS WHEEL BASE 3 05 = CAB CHASSIS WHEEL BASE 5 13 = 119 WB 53 = 119 WB 15 = VAN WHEEL BASE 5 55 = WAGON WHEEL BASE 5 17 = VAN WHEEL BASE 7	EG2 = 3.5L V6 Gas Engine EXM = 3.0L V6 Turbo Diesel Engine	DGZ = 5-Speed Auto W5A380 Transmission

Horns
Figure 8-910

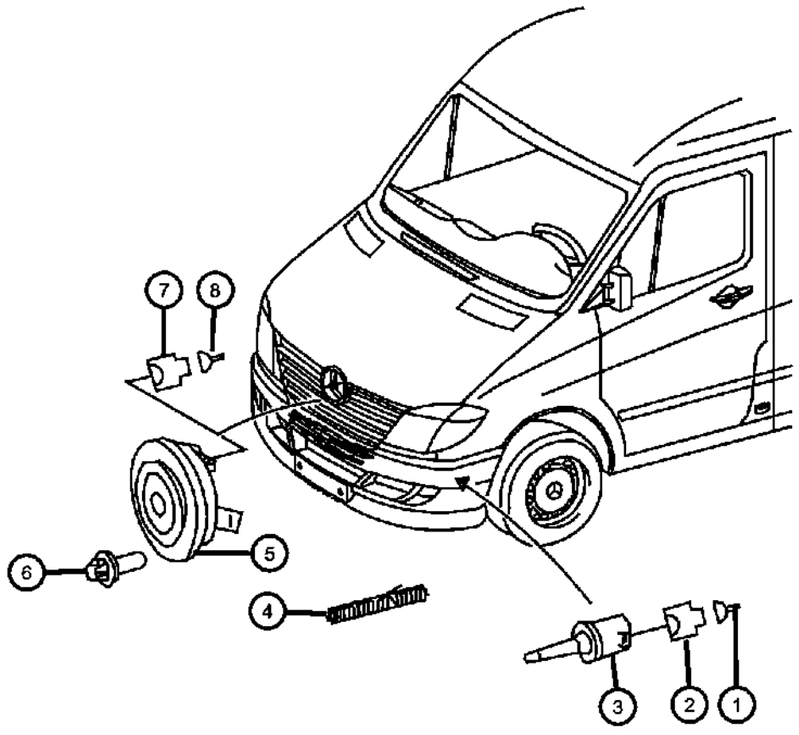

ITEM	PART NUMBER	QTY	LINE	SERIES	BODY	ENGINE	TRANS	TRIM	DESCRIPTION
1									TERMINAL
	05103873AA	3	3, 7	L	03, 05	EG2, EXM	DGZ		0.75 MM2,MQS;B14
		3	2, 3, 6, 7	L	13, 15, 17, 53, 55	EG2, EXM	DGZ		0.75 MM2,MQS;B14
2	05120277AA	1	2, 3, 6, 7	L		EG2, EXM	DGZ		CONNECTOR, Wiring Repair, Sensor of Outside Temperature Indicator 2-PIN,B14
3									SENSOR, Ambient Temperature
	05101096AA	1	3, 7	L	03, 05	EG2, EXM	DGZ		Outboard Temperature Feeler
		1	2, 3, 6, 7	L	13, 15, 17, 53, 55	EG2, EXM	DGZ		Outboard Temperature Feeler
4	05133388AA	1	2, 3, 6, 7	L		EG2, EXM	DGZ		TUBE, Heat Shrink, H1,H18,H18/1
5									HORN
	05120370AA	1	3, 7	L	03, 05	EG2, EXM	DGZ		
		1	2, 3, 6, 7	L	13, 15, 17, 53, 55	EG2, EXM	DGZ		
6	05073723AB	1	2, 3, 6, 7	L		EXM	DGZ		SCREW, Horn Mounting M8x20
7	05166277AA	1	2, 3, 6, 7	L		EG2, EXM	DGZ		CONNECTOR, 2-PIN,H1
8	68011404AA	AR	2, 3, 6, 7	L		EG2, EXM	DGZ		TERMINAL, H1

SPRINTER (VB)

SERIES	LINE	BODY	ENGINE	TRANSMISSION
L = LOWLINE	3 = HD DODGE 2WD 2 = Med. Duty DODGE 2WD	03 = CAB CHASSIS WHEEL BASE 3 05 = CAB CHASSIS WHEEL BASE 5 13 = 119 WB 53 = 119 WB 15 = VAN WHEEL BASE 5 55 = WAGON WHEEL BASE 5 17 = VAN WHEEL BASE 7	EG2 = 3.5L V6 Gas Engine EXM = 3.0L V6 Turbo Diesel Engine	DGZ = 5-Speed Auto W5A380 Transmission

Audible Reverse Signal Horn
Figure 8-920

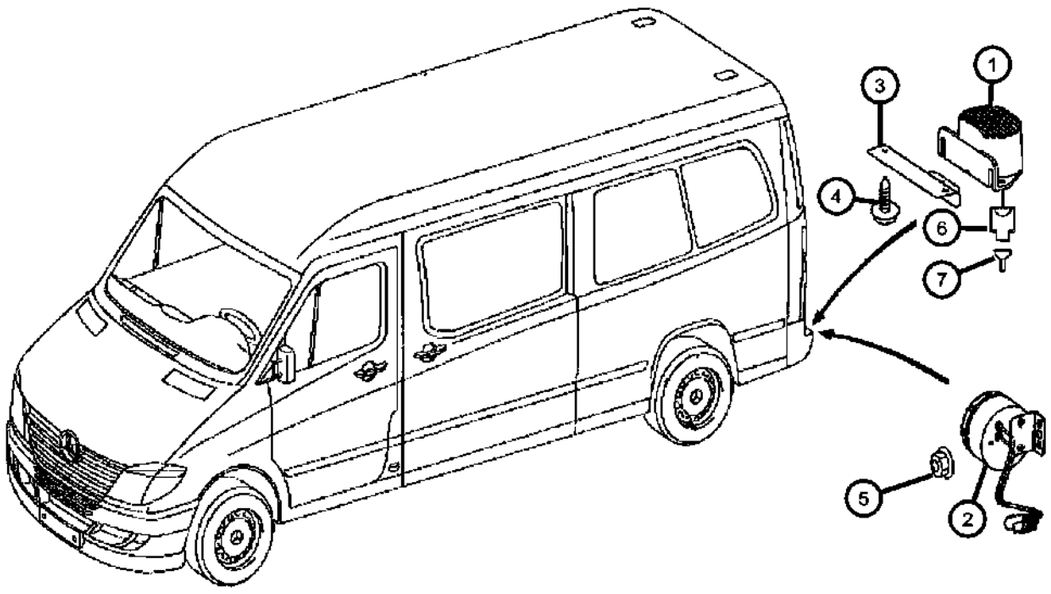

ITEM	PART NUMBER	QTY	LINE	SERIES	BODY	ENGINE	TRANS	TRIM	DESCRIPTION
1	05135946AA	1	2, 3, 6, 7	L	13, 15, 17, 53, 55	EG2, EXM	DGZ		HORN, End Crossmember Inner / With [XAW] Sales Codes
2	68024748AA	1	2, 3, 6, 7	L		EG2, EXM	DGZ		HORN, End Of Crossmember Inner / Pulse Sender Unit
3	05135596AA	1	2, 3, 6, 7	L	13, 15, 17, 53, 55	EG2, EXM	DGZ		BRACKET, Horn
4	06104565AA	2	2, 3, 6, 7	L		EG2, EXM	DGZ		SCREW, [4.2x9.5]
5	68004878AA	1	2, 3, 6, 7	L	13, 15, 17, 53, 55	EG2, EXM	DGZ		NUT, [M6]
6	05120277AA	1	2, 3, 6, 7	L		EG2, EXM	DGZ		CONNECTOR, Wiring Repair, [2 Pin / H3/4]
7	05103874AA	1	2, 3, 6, 7	L		EG2, EXM	DGZ		TERMINAL, [0.75 MM2; MQS; H3/4]
-8	05120860AA	1	2, 3, 6, 7	L		EG2, EXM	DGZ		GASKET, [1.6 - 1.9 MM2; H3/4]

SPRINTER (VB)

SERIES	LINE	BODY	ENGINE	TRANSMISSION
L = LOWLINE	3 = HD DODGE 2WD 2 = Med. Duty DODGE 2WD	03 = CAB CHASSIS WHEEL BASE 3 05 = CAB CHASSIS WHEEL BASE 5 13 = 119 WB 53 = 119 WB 15 = VAN WHEEL BASE 5 55 = WAGON WHEEL BASE 5 17 = VAN WHEEL BASE 7	EG2 = 3.5L V6 Gas Engine EXM = 3.0L V6 Turbo Diesel Engine	DGZ = 5-Speed Auto W5A380 Transmission

Battery Tray
Figure 8-1010

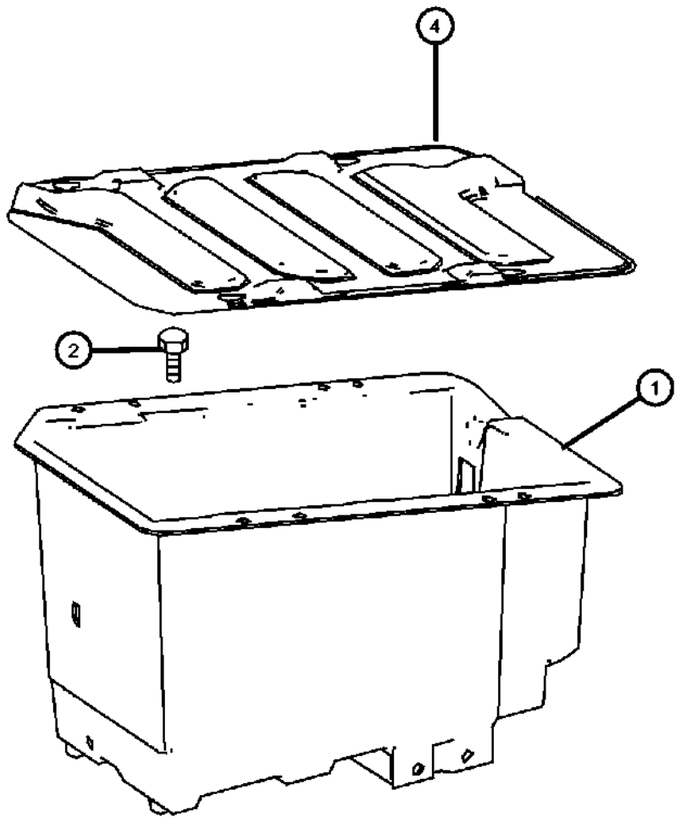

ITEM	PART NUMBER	QTY	LINE	SERIES	BODY	ENGINE	TRANS	TRIM	DESCRIPTION
1	68006357AA	1	2, 3, 6, 7	L		EG2, EXM	DGZ		TRAY, Battery, In Passenger Compartment
2	05126197AA	2	2, 6	L	13, 15, 17, 53, 55	EG2	DGZ		SCREW, Console To Frame [M6x12]
-3									SCREW, Hex Head, M6x12
	06104120AA	4	3, 7	L	03, 05	EXM, EG2	DGZ		Mounting Cover & Console To Frame
		4	2, 3, 6, 7	L	13, 15, 17, 53, 55	EG2, EXM	DGZ		Mounting Cover & Console To Frame
4	68006358AA	1	2, 3, 6, 7	L		EG2, EXM	DGZ		COVER, Battery Cover

SPRINTER (VB)

SERIES	LINE	BODY	ENGINE	TRANSMISSION
L = LOWLINE	3 = HD DODGE 2WD 2 = Med. Duty DODGE 2WD	03 = CAB CHASSIS WHEEL BASE 3 05 = CAB CHASSIS WHEEL BASE 5 13 = 119 WB 53 = 119 WB 15 = VAN WHEEL BASE 5 55 = WAGON WHEEL BASE 5 17 = VAN WHEEL BASE 7	EG2 = 3.5L V6 Gas Engine EXM = 3.0L V6 Turbo Diesel Engine	DGZ = 5-Speed Auto W5A380 Transmission

Auxilary Battery Tray, Battery Cable & Contactor
Figure 8-1020

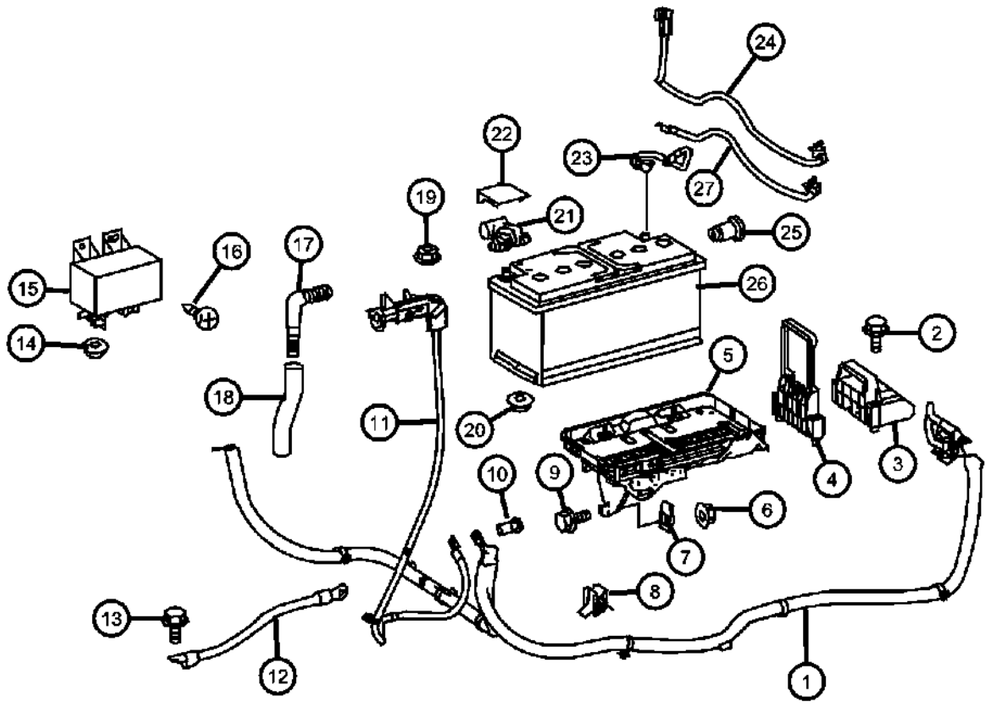

ITEM	PART NUMBER	QTY	LINE	SERIES	BODY	ENGINE	TRANS	TRIM	DESCRIPTION
1									HARNESS, Wiring
	68011460AA	1	2, 3, 6, 7	L		EXM	DGZ		
	68011461AA	1	2, 3, 6, 7	L		EG2	DGZ		
2									BOLT
	06104191AA	2	3, 7	L	03, 05	EG2, EXM	DGZ		Battery Fastening M6x70
		2	6, 7, 2, 3	L	13, 15, 17, 53, 55	EG2, EXM	DGZ		Battery Fastening M6x70
3	68011030AA	1	2, 3, 6, 7	L		EG2, EXM	DGZ		BRACKET, Battery
4	68011031AA	1	2, 3, 6, 7	L		EG2, EXM	DGZ		BRACKET, Battery
5	68011034AA	1	2, 3, 6, 7	L		EG2, EXM	DGZ		TRAY, Battery, Auxilary Battery Tray With Sales Code [BC1]
6									NUT
	68004878AA	1	3, 7	L	03, 05	EG2, EXM	DGZ		Support to Firewall M6
		1	2, 3, 6, 7	L	13, 15, 17, 53, 55	EG2, EXM	DGZ		Support to Firewall M6
7	05133420AA	2	2, 3, 6, 7	L		EG2, EXM	DGZ		NUT, Clip-On, M6
8									RETAINER
	68011037AA	1	3, 7	L	03, 05	EG2, EXM	DGZ		Drain Hose
		1	2, 3, 6, 7	L	13, 15, 17, 53, 55	EG2, EXM	DGZ		Drain Hose
9									SCREW
	05183964AA	2	7, 3	L	03, 05	EG2, EXM	DGZ		M6x10
		2	2, 3, 6, 7	L	13, 15, 17, 53, 55	EG2, EXM	DGZ		M6x10
10	68011453AA	1	2, 3, 6, 7	L		EG2, EXM	DGZ		NUT
11									HARNESS, Wiring
	68011449AA	1	2, 3, 6, 7	L		EXM	DGZ		Jump Starting Point
	68011450AA	1	3, 7	L	03, 05	EG2	DGZ		Jump Starting Point
		1	2, 6	L	13, 15, 17, 53, 55	EG2	DGZ		Jump Starting Point
12	05120226AA	1	2, 3, 6, 7	L		EG2, EXM	DGZ		STRAP, Ground, Engine Support,Left to Longtudinal Member
13	06104022AB	2	3, 7	L	03, 05	EG2, EXM	DGZ		SCREW, Ground Strap Mounting M8x16
14									NUT
	68004878AA	2	3, 7	L	03, 05	EG2, EXM	DGZ		

SPRINTER (VB)

SERIES	LINE	BODY	ENGINE	TRANSMISSION
L = LOWLINE	3 = HD DODGE 2WD 2 = Med. Duty DODGE 2WD	03 = CAB CHASSIS WHEEL BASE 3 05 = CAB CHASSIS WHEEL BASE 5 13 = 119 WB 53 = 119 WB 15 = VAN WHEEL BASE 5 55 = WAGON WHEEL BASE 5 17 = VAN WHEEL BASE 7	EG2 = 3.5L V6 Gas Engine EXM = 3.0L V6 Turbo Diesel Engine	DGZ = 5-Speed Auto W5A380 Transmission

Auxilary Battery Tray, Battery Cable & Contactor
Figure 8-1020

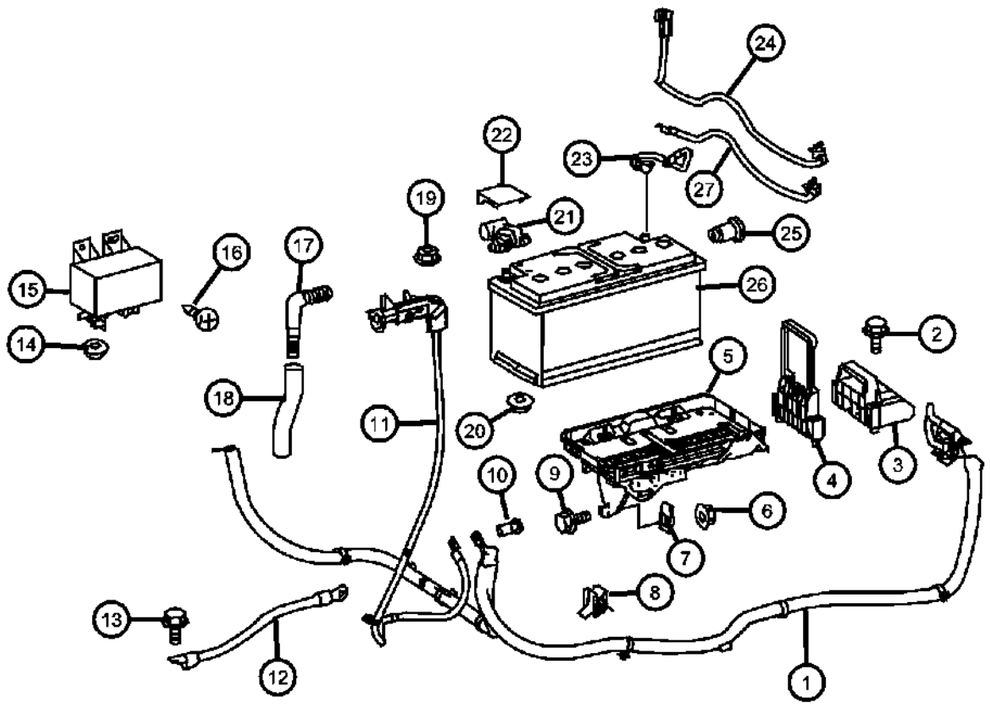

ITEM	PART NUMBER	QTY	LINE	SERIES	BODY	ENGINE	TRANS	TRIM	DESCRIPTION
		2	2, 3, 6, 7	L	13, 15, 17, 53, 55	EG2, EXM	DGZ		
15									RELAY
	05120361AA	1	3, 7	L	03, 05	EG2, EXM	DGZ		Cut-Off Relay
		1	2, 3, 6, 7	L	13, 15, 17, 53, 55	EG2, EXM	DGZ		Cut-Off Relay
16	06104566AA	2	2, 3, 6, 7	L		EG2, EXM	DGZ		SCREW, Tapping
17									ELBOW, Male Adapter
	05125802AA	1	2, 3, 6, 7	L	13, 15, 17, 53, 55	EG2, EXM	DGZ		To Battery
		1	2, 3, 6, 7	L	03, 05	EG2, EXM	DGZ		To Battery
18	05125962AA	40	2, 3, 6, 7	L		EG2, EXM	DGZ		HOSE, Battery Vent, 5x1MM
19	06105169AA	1	2, 3, 6, 7	L		EG2, EXM	DGZ		NUT, Fuse Box to Battery Case M8
20									NUT
	68004878AA	2	6, 7, 2, 3	L	13, 15, 17, 53, 55	EG2, EXM	DGZ		Battery Mounting M6
		2	3, 7	L	03, 05	EG2, EXM	DGZ		Battery Mounting M6
21									TERMINAL, Battery
	05120949AA	1	2, 3, 6, 7	L		EG2, EXM	DGZ		Heavy Duty
	68011027AA	1	2, 3, 6, 7	L		EG2, EXM	DGZ		
22									COVER, Battery Terminal
	05098850AA	1	3, 7	L	03, 05	EG2, EXM	DGZ		
		1	2, 3, 6, 7	L	13, 15, 17, 53, 55	EG2, EXM	DGZ		
23	68011458AA	1	2, 3, 6, 7	L		EG2, EXM	DGZ		STRAP, Ground, Additional Battery
24	68011454AA	1	2, 3, 6, 7	L		EG2, EXM	DGZ		HARNESS, Wiring, From Battery to Frame
25									PLUG
	05099303AA	1	3, 7	L	03, 05	EG2, EXM	DGZ		To Battery 6x8MM
		1	2, 3, 6, 7	L	13, 15, 17, 53, 55	EG2, EXM	DGZ		To Battery 6x8MM
26									BATTERY
	05133941AA	1	3, 7	L	03, 05	EG2, EXM	DGZ		12V/100AH / Auxilary Battery
	BB049850AA								Mopar Replacement Battery (72 Series)
		1	2, 3, 6, 7	L	13, 15, 17, 53, 55	EG2, EXM	DGZ		12V/100AH / Auxilary Battery

SPRINTER (VB)

SERIES	LINE	BODY	ENGINE	TRANSMISSION
L = LOWLINE	3 = HD DODGE 2WD 2 = Med. Duty DODGE 2WD	03 = CAB CHASSIS WHEEL BASE 3 05 = CAB CHASSIS WHEEL BASE 5 13 = 119 WB 53 = 119 WB 15 = VAN WHEEL BASE 5 55 = WAGON WHEEL BASE 5 17 = VAN WHEEL BASE 7	EG2 = 3.5L V6 Gas Engine EXM = 3.0L V6 Turbo Diesel Engine	DGZ = 5-Speed Auto W5A380 Transmission

AR = use ase required - = Non illustrrated part

<< RETURN TO GROUP INDEX

Auxilary Battery Tray, Battery Cable & Contactor
Figure 8-1020

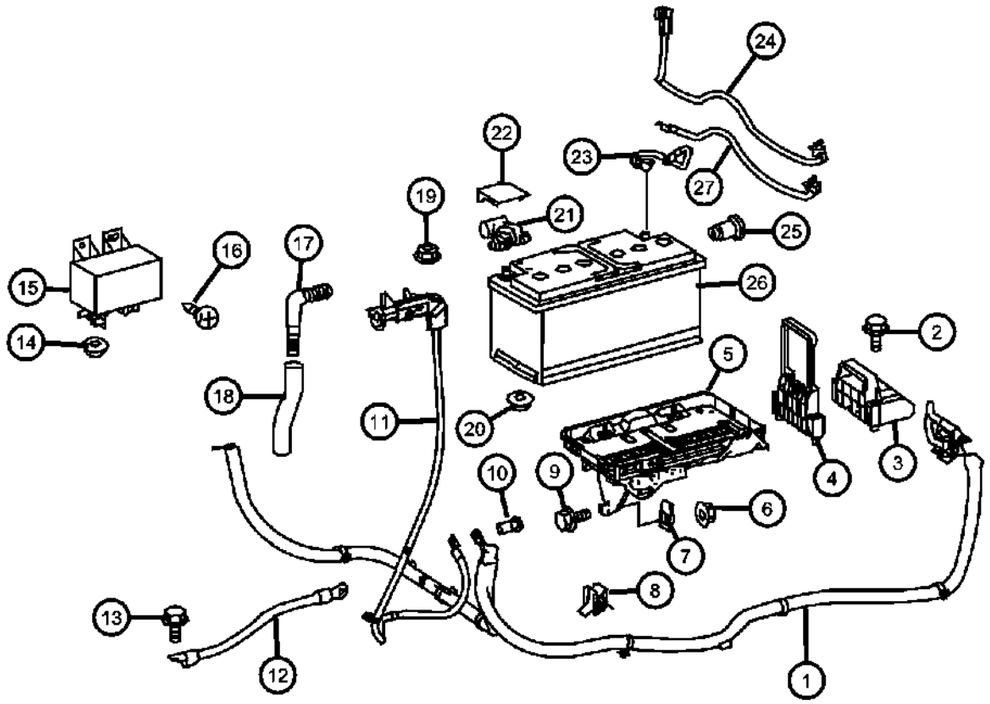

ITEM	PART NUMBER	QTY	LINE	SERIES	BODY	ENGINE	TRANS	TRIM	DESCRIPTION
	BB049850AA								Mopar Replacement Battery (72 Series)
	05134258AA	1	2, 3, 6, 7	L		EG2, EXM	DGZ		Starter Battery
27	68011464AA	1	2, 3, 6, 7	L		EG2, EXM	DGZ		STRAP, Ground, Ground to Frame

SPRINTER (VB)

SERIES	LINE	BODY	ENGINE	TRANSMISSION
L = LOWLINE	3 = HD DODGE 2WD 2 = Med. Duty DODGE 2WD	03 = CAB CHASSIS WHEEL BASE 3 05 = CAB CHASSIS WHEEL BASE 5 13 = 119 WB 53 = 119 WB 15 = VAN WHEEL BASE 5 55 = WAGON WHEEL BASE 5 17 = VAN WHEEL BASE 7	EG2 = 3.5L V6 Gas Engine EXM = 3.0L V6 Turbo Diesel Engine	DGZ = 5-Speed Auto W5A380 Transmission

Head Lamp Unit,Turn Signal & Lamp at Side
Figure 8-1110

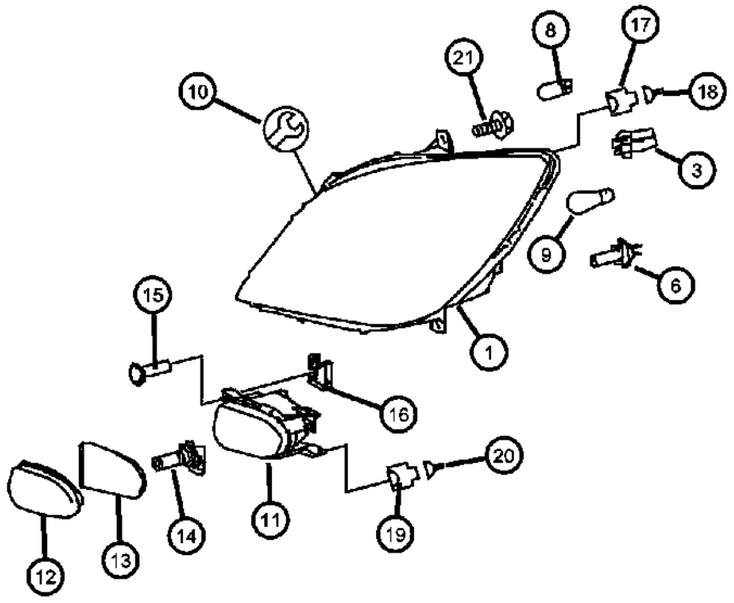

ITEM	PART NUMBER	QTY	LINE	SERIES	BODY	ENGINE	TRANS	TRIM	DESCRIPTION
1									LAMP, Headlamp Park And Turn
	68004882AA	1	2, 3, 6, 7	L		EG2, EXM	DGZ		With [LM2], Right
	68004883AA	1	2, 3, 6, 7	L		EG2, EXM	DGZ		With [LM2], Left
	68012120AA	1	2, 3, 6, 7	L		EG2, EXM	DGZ		Without [LM2], Right
	68012121AA	1	2, 3, 6, 7	L		EXM, EG2	DGZ		Without [LM2], Left
-2	68012126AA	2	2, 3, 6, 7	L		EG2, EXM	DGZ		MOTOR, Light Range Adjuster
3	05133959AA	2	2, 3, 6, 7	L		EG2, EXM	DGZ		SOCKET, Lamp
-4	68012127AA	2	2, 3, 6, 7	L		EG2, EXM	DGZ		MODULE, With [LM3]
-5	68012128AA	2	2, 3, 6, 7	L		EG2, EXM	DGZ		SOCKET, Lamp, With [LM3]
6									BULB, Headlamp, H-7
	05104684AA	6	2, 3, 6, 7	L		EG2, EXM	DGZ		Headlamp, Fog Lamp, Corner Lamp With [LNJ]
		4	2, 3, 6, 7	L		EG2, EXM	DGZ		Without [LNJ]
-7	68012130AA	2	2, 3, 6, 7	L		EG2, EXM	DGZ		BULB, Xenon Headlamp Bulb [LM3]
8	68012129AA	2	2, 3, 6, 7	L		EG2, EXM	DGZ		BULB, Parking Lamp [12V / 5W]
9	05104662AA	2	2, 3, 6, 7	L		EG2, EXM	DGZ		BULB, Blinker [12V / 21W]
10									BRACKET
	68012122AA	1	2, 3, 6, 7	L		EG2, EXM	DGZ		Headlamp Mounting Tabs Kit, Right
	68012123AA	1	2, 3, 6, 7	L		EG2, EXM	DGZ		Headlamp Mounting Tabs Kit, Left
11									LAMP, Fog
	68024972AA	1	2, 3, 6, 7	L		EG2, EXM	DGZ		Right
	68024973AA	1	2, 3, 6, 7	L		EG2, EXM	DGZ		Left
12									LENS
	68012132AA	1	2, 3, 6, 7	L		EG2, EXM	DGZ		Left
	68012137AA	1	2, 3, 6, 7	L		EG2, EXM	DGZ		Right
13	68012133AA	2	2, 3, 6, 7	L		EG2, EXM	DGZ		SEALRight & Left
14	68012135AA	2	2, 3, 6, 7	L		EG2, EXM	DGZ		BULB, Fog Lamp, 12V 55W
15	06104599AA	4	2, 3, 6, 7	L		EG2, EXM	DGZ		SCREW, Tapping, [4.8x19]
16	68012139AA	4	2, 3, 6, 7	L		EG2, EXM	DGZ		RETAINER
17	05103896AA	2	2, 3, 6, 7	L		EG2, EXM	DGZ		CONNECTOR, [E1, E1/6, E2,E2/6], Right & Left
18	05103898AA	AR	2, 3, 6, 7	L		EG2, EXM	DGZ		TERMINAL, Female, [0.5 - 1.0 MM2]

SPRINTER (VB)

SERIES	LINE	BODY	ENGINE	TRANSMISSION
L = LOWLINE	3 = HD DODGE 2WD 2 = Med. Duty DODGE 2WD	03 = CAB CHASSIS WHEEL BASE 3 05 = CAB CHASSIS WHEEL BASE 5 13 = 119 WB 53 = 119 WB 15 = VAN WHEEL BASE 5 55 = WAGON WHEEL BASE 5 17 = VAN WHEEL BASE 7	EG2 = 3.5L V6 Gas Engine EXM = 3.0L V6 Turbo Diesel Engine	DGZ = 5-Speed Auto W5A380 Transmission

AR = use ase required - = Non illustrrated part

<< RETURN TO GROUP INDEX

Head Lamp Unit,Turn Signal & Lamp at Side
Figure 8-1110

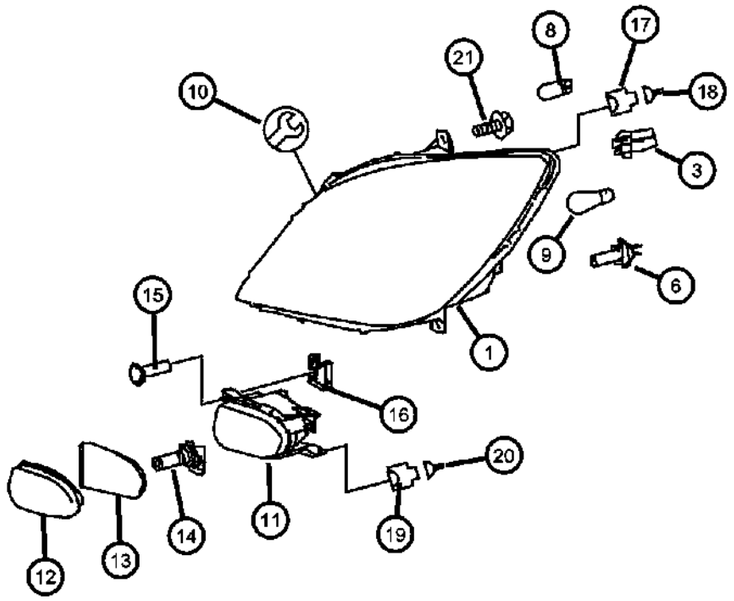

ITEM	PART NUMBER	QTY	LINE	SERIES	BODY	ENGINE	TRANS	TRIM	DESCRIPTION
19	68011295AA	2	2, 3, 6, 7	L		EG2, EXM	DGZ		CONNECTOR, Wiring, Fog Lamp [2 Pin; E5/1, E5/2], Right & Left
20									TERMINAL
	05133353AA	AR	2, 3, 6, 7	L		EG2	DGZ		[0.5 - 1.0 MM2]
		AR	2, 3, 6, 7	L		EXM	DGZ		[0.5 - 1.0 MM2]
21	68004879AA	8	2, 3, 6, 7	L		EG2, EXM	DGZ		SCREW, Headlamp Mounting

SPRINTER (VB)

SERIES	LINE	BODY	ENGINE	TRANSMISSION
L = LOWLINE	3 = HD DODGE 2WD 2 = Med. Duty DODGE 2WD	03 = CAB CHASSIS WHEEL BASE 3 05 = CAB CHASSIS WHEEL BASE 5 13 = 119 WB 53 = 119 WB 15 = VAN WHEEL BASE 5 55 = WAGON WHEEL BASE 5 17 = VAN WHEEL BASE 7	EG2 = 3.5L V6 Gas Engine EXM = 3.0L V6 Turbo Diesel Engine	DGZ = 5-Speed Auto W5A380 Transmission

Rear Stop Lamps
Figure 8-1120

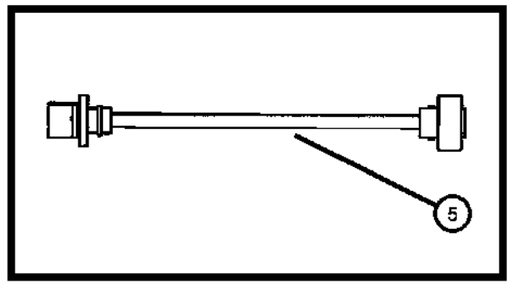

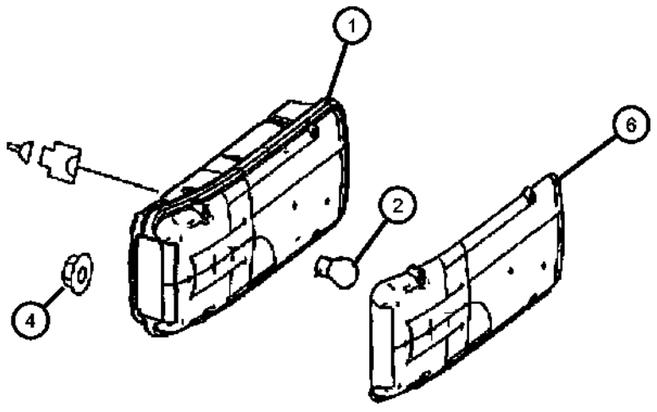

ITEM	PART NUMBER	QTY	LINE	SERIES	BODY	ENGINE	TRANS	TRIM	DESCRIPTION
1									LAMP, Tail Stop Turn
	68012140AA	1	3, 7	L	03, 05	EG2, EXM	DGZ		Right
	68012141AA	1	3, 7	L	03, 05	EG2, EXM	DGZ		Left
2									BULB
	05104649AA	2	2, 3, 6, 7	L		EG2, EXM	DGZ		[12V - 5W]
	05104662AA	2	2, 3, 6, 7	L		EG2, EXM	DGZ		Orange [12V - 21W]
-3	L0007506	2	2, 3, 6, 7	L		EG2, EXM	DGZ		BULB, P25-1, [12V - 21W]
4	06105169AA	4	3, 7	L	03, 05	EG2, EXM	DGZ		NUT
5	68016790AA	2	3, 7	L	03, 05	EG2, EXM	DGZ		WIRING
6									LENS, Taillamp
	68031562AA	1	3, 7	L	03, 05	EG2, EXM	DGZ		Left
	68031563AA	1	3, 7	L	03, 05	EG2, EXM	DGZ		Right

SPRINTER (VB)

SERIES	LINE	BODY	ENGINE	TRANSMISSION
L = LOWLINE	3 = HD DODGE 2WD 2 = Med. Duty DODGE 2WD	03 = CAB CHASSIS WHEEL BASE 3 05 = CAB CHASSIS WHEEL BASE 5 13 = 119 WB 53 = 119 WB 15 = VAN WHEEL BASE 5 55 = WAGON WHEEL BASE 5 17 = VAN WHEEL BASE 7	EG2 = 3.5L V6 Gas Engine EXM = 3.0L V6 Turbo Diesel Engine	DGZ = 5-Speed Auto W5A380 Transmission

Rear Stop Lamp & License Plate Lamp
Figure 8-1140

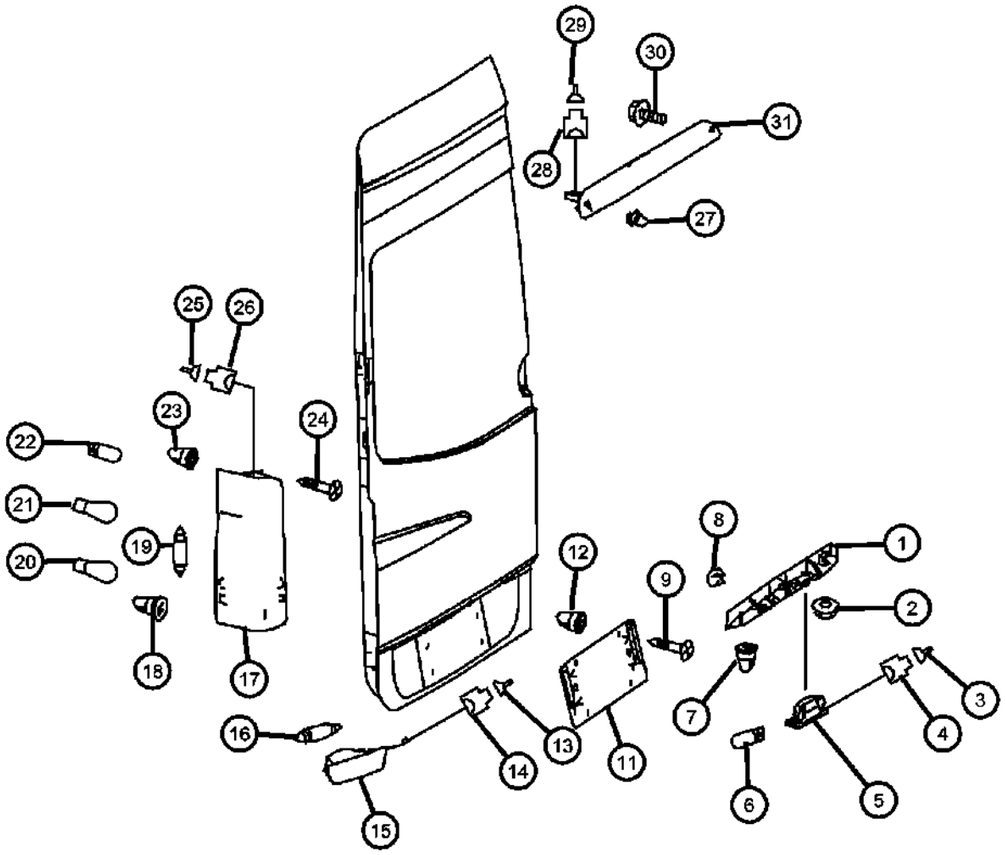

ITEM	PART NUMBER	QTY	LINE	SERIES	BODY	ENGINE	TRANS	TRIM	DESCRIPTION
1	1HE84XDVAA	1	2, 3, 6, 7	L	13, 15, 17, 53, 55	EG2, EXM	DGZ		COVER, Lamp
2	68006505AA	2	2, 3, 6, 7	L	13, 15, 17, 53, 55	EG2, EXM	DGZ		NUT
3	05138912AA	AR	2, 3, 6, 7	L		EG2, EXM	DGZ		TERMINAL, E19/1.E19/2
4	68011339AA	2	2, 3, 6, 7	L		EG2, EXM	DGZ		CONNECTOR, E19/2
5	68006502AA	2	2, 3, 6, 7	L	13, 15, 17, 53, 55	EG2, EXM	DGZ		LAMP, License
6	05104608AA	1	2, 3, 6, 7	L	13, 15, 17, 53, 55	EG2, EXM	DGZ		BULB, 12V 5W, License Plate Lamp 12V-5W
7	68006507AA	4	2, 3, 6, 7	L	13, 15, 17, 53, 55	EG2, EXM	DGZ		RETAINER, Covering to Door
8	68006504AA	3	2, 3, 6, 7	L		EG2, EXM	DGZ		RETAINER, Covering to Door
9	06104632AA	4	2, 3, 6, 7	L	13, 15, 17, 53, 55	EG2, EXM	DGZ		SCREW, Hex Head, Rear License Plate Fastening M5x10
-10									SCREW
	06104567AA	2	3, 7	L	03, 05	EG2, EXM	DGZ		License Plate To License Plate Bracket
		2	2, 3, 6, 7	L	13, 15, 17, 53, 55	EG2, EXM	DGZ		License Plate To License Plate Bracket
11	68006506AA	1	2, 3, 6, 7	L	13, 15, 17, 53, 55	EG2, EXM	DGZ		BRACKET, Rear License Plate Fastening
12	68006507AA	4	2, 3, 6, 7	L	13, 15, 17, 53, 55	EG2, EXM	DGZ		RETAINER, Rear License Plate Fastening
13	05120860AA	1	2, 3, 6, 7	L		EG2, EXM	DGZ		GASKET
14	05120277AA	1	2, 3, 6, 7	L		EG2, EXM	DGZ		CONNECTOR, Wiring Repair
15									REFLECTOR, NONE, SPRINTER
	68012886AA	1	2, 3, 6, 7	L	13, 15, 17, 53, 55	EG2, EXM	DGZ		Right
	68012887AA	1	2, 3, 6, 7	L	13, 15, 17, 53, 55	EG2, EXM	DGZ		Left
16	L0007506	2	2, 3, 6, 7	L		EG2, EXM	DGZ		BULB, P25-1
17									LAMP, Tail Stop Turn
	68012882AA	1	2, 6	L	13, 15, 53, 55, 57	EG2, EXM	DGZ		Right
	68012883AA	1	2, 6	L	13, 15, 53, 55, 57	EG2, EXM	DGZ		Left
18	68012881AA	6	2, 3, 6, 7	L	13, 15, 17, 53, 55	EG2, EXM	DGZ		RETAINER, Attachment Tail Lamp
19	05104647AA	2	2, 3, 6, 7	L	13, 15, 17, 53, 55	EG2, EXM	DGZ		BULB, TAIL LAMP

SPRINTER (VB)

SERIES	LINE	BODY	ENGINE	TRANSMISSION
L = LOWLINE	3 = HD DODGE 2WD 2 = Med. Duty DODGE 2WD	03 = CAB CHASSIS WHEEL BASE 3 05 = CAB CHASSIS WHEEL BASE 5 13 = 119 WB 53 = 119 WB 15 = VAN WHEEL BASE 5 55 = WAGON WHEEL BASE 5 17 = VAN WHEEL BASE 7	EG2 = 3.5L V6 Gas Engine EXM = 3.0L V6 Turbo Diesel Engine	DGZ = 5-Speed Auto W5A380 Transmission

AR = use ase required - = Non illustrrated part

<< RETURN TO GROUP INDEX

Rear Stop Lamp & License Plate Lamp
Figure 8-1140

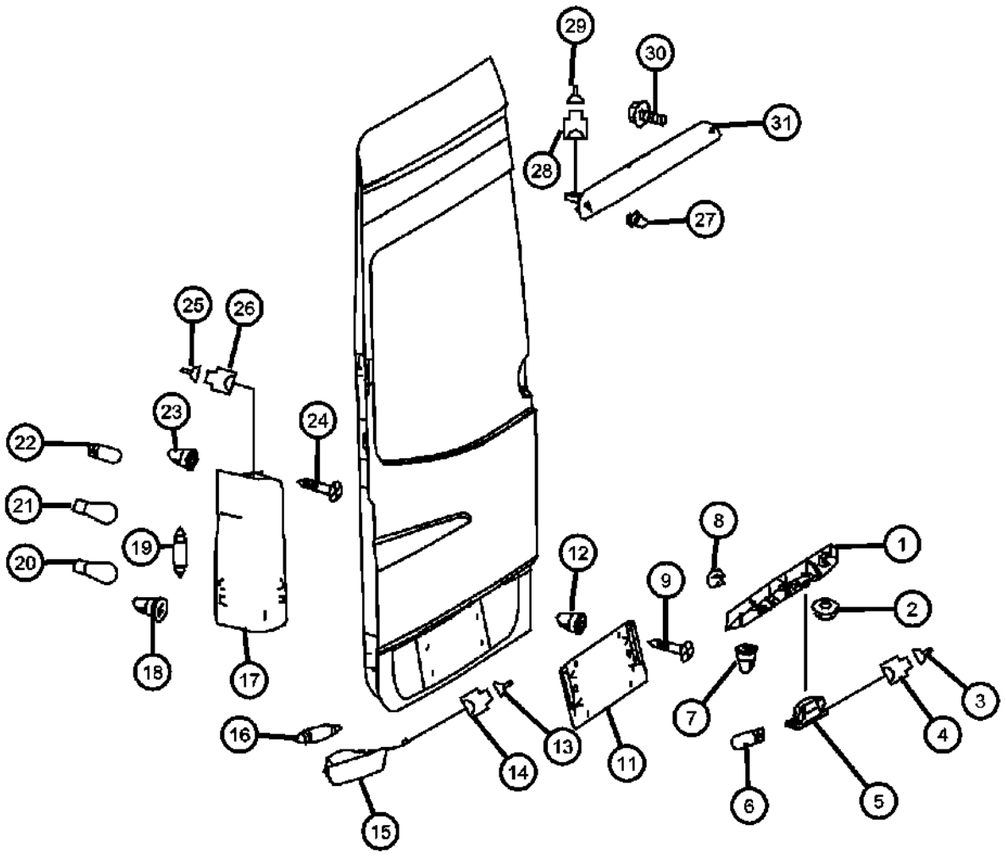

ITEM	PART NUMBER	QTY	LINE	SERIES	BODY	ENGINE	TRANS	TRIM	DESCRIPTION
20	05104662AA	2	2, 3, 6, 7	L		EG2, EXM	DGZ		BULB, Blinker Light 12V-21W
21	L0007506	2	2, 3, 6, 7	L		EG2, EXM	DGZ		BULB, P25-1, Stop/Tail Rear Fog Lights
22	05104649AA	2	2, 3, 6, 7	L		EG2, EXM	DGZ		BULB, Tail Light 12V-5W
23	05098837AB	4	2, 3, 6, 7	L	13, 15, 17, 53, 55	EG2, EXM	DGZ		NUT, Plastic Snap-in, Tail Lamp to Body
24	05104609AA	6	2, 3, 6, 7	L	13, 15, 17, 53, 55	EG2, EXM	DGZ		SCREW, Tail Lamp to Body 4.8x13
25	05103892AA	1	2, 3, 6, 7	L		EG2, EXM	DGZ		TERMINAL
26	05138860AA	2	2, 3, 6, 7	L	13, 15, 17, 53, 55	EG2, EXM	DGZ		CONNECTOR, Taillamps 8-PIN;E3,E4, Right & Left
27	05098837AB	2	2, 3, 6, 7	L	13, 15, 17	EG2, EXM	DGZ		NUT, Plastic Snap-in, Auxiliary Stop Lamp to Body
28	05138029AA	1	2, 3, 6, 7	L		EG2, EXM	DGZ		CONNECTOR, 3rd.Stop Lamp 2-PIN;E21
29	05103873AA	3	2, 3, 6, 7	L	13, 15, 17, 53, 55	EG2, EXM	DGZ		TERMINAL
30	06104505AA	2	2, 3, 6, 7	L	13, 15, 17, 53, 55	EG2, EXM	DGZ		SCREW, Auxiliary Stop Lamp to Body 4.8x13
31	68012885AA	1	2, 3, 6, 7	L	15, 17, 53, 55, 13	EG2, EXM	DGZ		LAMP, Center High Mounted Stop

SPRINTER (VB)

SERIES	LINE	BODY	ENGINE	TRANSMISSION
L = LOWLINE	3 = HD DODGE 2WD 2 = Med. Duty DODGE 2WD	03 = CAB CHASSIS WHEEL BASE 3 05 = CAB CHASSIS WHEEL BASE 5 13 = 119 WB 53 = 119 WB 15 = VAN WHEEL BASE 5 55 = WAGON WHEEL BASE 5 17 = VAN WHEEL BASE 7	EG2 = 3.5L V6 Gas Engine EXM = 3.0L V6 Turbo Diesel Engine	DGZ = 5-Speed Auto W5A380 Transmission

Interior Lamp,Contact Switch
Figure 8-1150

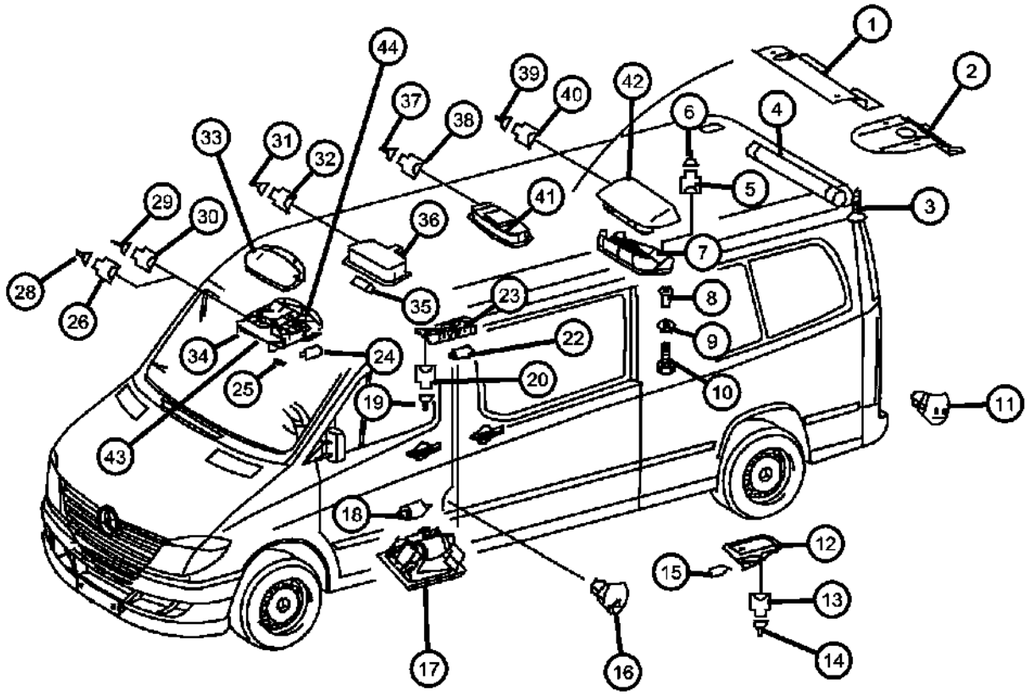

ITEM	PART NUMBER	QTY	LINE	SERIES	BODY	ENGINE	TRANS	TRIM	DESCRIPTION
1	68009780AA	2	2, 3, 6, 7	L	13, 15, 17, 53, 55	EG2, EXM	DGZ		BRACKET, Cargo Lamp
2	68009779AA	2	2, 3, 6, 7	L	15, 17	EG2, EXM	DGZ		BRACKET, Cargo Lamp
3	06104527AA	6	2, 3, 6, 7	L	17, 53, 55, 13, 15	EG2, EXM	DGZ		SCREW
4	05133563AA	2	2, 3, 6, 7	L	13, 15, 17, 53, 55	EG2, EXM	DGZ		BULB, 12V 8W
5	68011322AA	2	2, 3, 6, 7	L		EG2, EXM	DGZ		ISOLATOR, [E17/9 Or E17/10] Front Door Lamp
6	05103871AA	AR	2, 3, 6, 7	L		EG2, EXM	DGZ		TERMINAL, Female
7	68017617AA	1	2, 3, 6, 7	L	13, 15, 17	EG2, EXM	DGZ		BRACKET
8									RIVET, NONE, SPRINTER
	05174643AA	2	2, 3, 6, 7	L	13, 15, 17, 53, 55	EG2, EXM	DGZ		
		2	2, 3, 6, 7	L	53, 55	EG2, EXM	DGZ		
9	05104639AA	2	2, 3, 6, 7	L	13, 15, 17, 53, 55	EG2, EXM	DGZ		WASHER, Bracket Mounting
10	68010354AA	2	2, 3, 6, 7	L	13, 15, 17, 53, 55	EG2, EXM	DGZ		SCREW
11	68011041AA	1	2, 3, 6, 7	L		EXM, EG2	DGZ		POWER OUTLET
12	05103765AA	2	2, 3, 6, 7	L	13, 15, 17, 53, 55	EG2, EXM	DGZ		LAMP, Courtesy
13	05120749AA	1	2, 3, 6, 7	L		EG2, EXM	DGZ		CONNECTOR, Courtesy Lamp 2-PIN
14	05103880AA	AR	2, 3, 6, 7	L		EG2, EXM	DGZ		TERMINAL
15	05104608AA	1	2, 3, 6, 7	L	13, 15, 17, 53, 55	EG2, EXM	DGZ		BULB, 12V 5W, 12V-5W
16	68011041AA	1	2, 3, 6, 7	L		EG2, EXM	DGZ		POWER OUTLET, Seat Case Left,Front
17	68017601AA	2	2, 3, 6, 7	L		EG2, EXM	DGZ		LAMP, Courtesy
18	05096968AA	1	2, 3, 6, 7	L	13, 15, 17, 53, 55	EG2, EXM	DGZ		BULB, 12V 5W, Courtesy Lamp 12V-5W
19	05103920AA	1	2, 3, 6, 7	L	13, 15, 17, 53, 55	EG2, EXM	DGZ		LINK, Load Sensing
20	05120514AA	AR	2, 3, 6, 7	L		EG2, EXM	DGZ		TERMINAL, Female
-21	68011232AA	1	2, 3, 6, 7	L		EG2, EXM	DGZ		CONNECTOR, Wiring, [4 Pin / E15/3; E15/38]
22	68017600AA	AR	2, 3, 6, 7	L	13, 15, 17, 53, 55	EG2, EXM	DGZ		BULB
23	68017599AA	1	2, 3, 6, 7	L	53, 55, 13, 15, 17	EG2, EXM	DGZ		LAMP, Cargo, 1st.Row of Passenger Seats

SPRINTER (VB)

SERIES	LINE	BODY	ENGINE	TRANSMISSION
L = LOWLINE	3 = HD DODGE 2WD 2 = Med. Duty DODGE 2WD	03 = CAB CHASSIS WHEEL BASE 3 05 = CAB CHASSIS WHEEL BASE 5 13 = 119 WB 53 = 119 WB 15 = VAN WHEEL BASE 5 55 = WAGON WHEEL BASE 5 17 = VAN WHEEL BASE 7	EG2 = 3.5L V6 Gas Engine EXM = 3.0L V6 Turbo Diesel Engine	DGZ = 5-Speed Auto W5A380 Transmission

AR = use ase required - = Non illustrrated part

<< RETURN TO GROUP INDEX

Interior Lamp,Contact Switch
Figure 8-1150

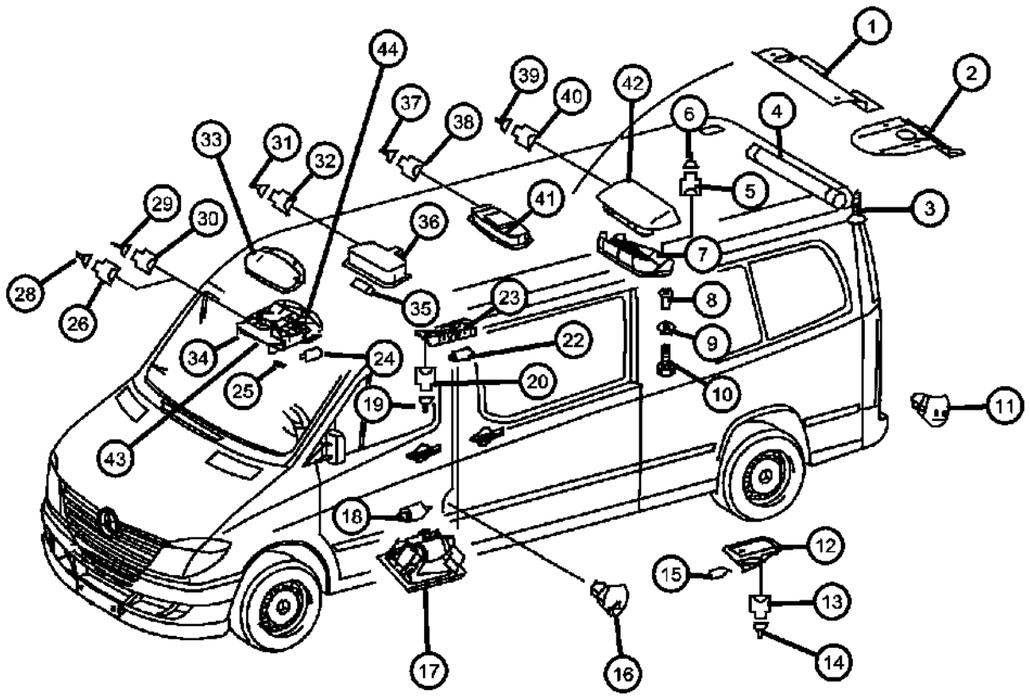

ITEM	PART NUMBER	QTY	LINE	SERIES	BODY	ENGINE	TRANS	TRIM	DESCRIPTION
24	05175455AA	4	2, 3, 6, 7	L	13, 15, 17, 53, 55	EG2, EXM	DGZ		BULB, 12V 6W
25	05101488AA	4	2, 3, 6, 7	L	13, 15, 17, 53, 55	EG2, EXM	DGZ		SOCKET, Instrument Cluster
26									CONNECTOR, Wiring
	68011262AA	1	2, 3, 6, 7	L		EG2, EXM	DGZ		Overhead Control Panel, Blue
	68011265AA	1	2, 3, 6, 7	L		EG2, EXM	DGZ		Overhead Control Panel,Transparent
-27	68011264AA	1	2, 3, 6, 7	L		EG2, EXM	DGZ		CONNECTOR, [6 Pin N70]
28									TERMINAL
	05103873AA	3	2, 3, 6, 7	L	13, 15, 17, 53, 55	EG2, EXM	DGZ		
		3	3, 7	L	03, 05	EG2, EXM	DGZ		
29									TERMINAL
	05103873AA	3	3, 7	L	03, 05	EG2, EXM	DGZ		
		3	2, 3, 6, 7	L	13, 15, 17, 53, 55	EG2, EXM	DGZ		
30	05101166AA	1	2, 3, 6, 7	L		EG2, EXM	DGZ		CONNECTOR
31	05103882AA	1	2, 3, 6, 7	L					TERMINAL
32	05120545AA	1	2, 3, 6, 7	L		EXM, EG2	DGZ		CONNECTOR, Dome Lamp,Front
33	68017602AA	1	2, 3, 6, 7	L		EG2, EXM	DGZ		COVER
34	68017604AA	1	2, 3, 6, 7	L		EG2, EXM	DGZ		LAMP, Reading
35	05104645AA	1	2, 3, 6, 7	L	13, 15, 17, 53, 55	EG2, EXM	DGZ		BULB
36	05104459AA	1	2, 3, 6, 7	L		EG2, EXM	DGZ		LAMP, CargoFront
37	05120514AA	AR	2, 3, 6, 7	L		EG2, EXM	DGZ		TERMINAL, Female
38	68011322AA	2	2, 3, 6, 7	L		EG2, EXM	DGZ		ISOLATOR, [E15/35] Loading Compartment Lamp
39									TERMINAL
	05103873AA	3	3, 7	L	03, 05	EG2, EXM	DGZ		
		3	2, 3, 6, 7	L	13, 15, 17, 53, 55	EG2, EXM	DGZ		
40	68011235AA	1	2, 3, 6, 7	L		EG2, EXM	DGZ		CONNECTOR, [6 Pin / B27/1]
41	68017598AA	1	2, 3, 6, 7	L	13, 15, 17, 53, 55	EG2, EXM	DGZ		LAMP, Cargo
42	68017616AA	1	2, 3, 6, 7	L	13, 15, 17	EG2, EXM	DGZ		SENSOR, Loading Compartment Lamp

SPRINTER (VB)

SERIES	LINE	BODY	ENGINE	TRANSMISSION
L = LOWLINE	3 = HD DODGE 2WD 2 = Med. Duty DODGE 2WD	03 = CAB CHASSIS WHEEL BASE 3 05 = CAB CHASSIS WHEEL BASE 5 13 = 119 WB 53 = 119 WB 15 = VAN WHEEL BASE 5 55 = WAGON WHEEL BASE 5 17 = VAN WHEEL BASE 7	EG2 = 3.5L V6 Gas Engine EXM = 3.0L V6 Turbo Diesel Engine	DGZ = 5-Speed Auto W5A380 Transmission

Interior Lamp,Contact Switch
Figure 8-1150

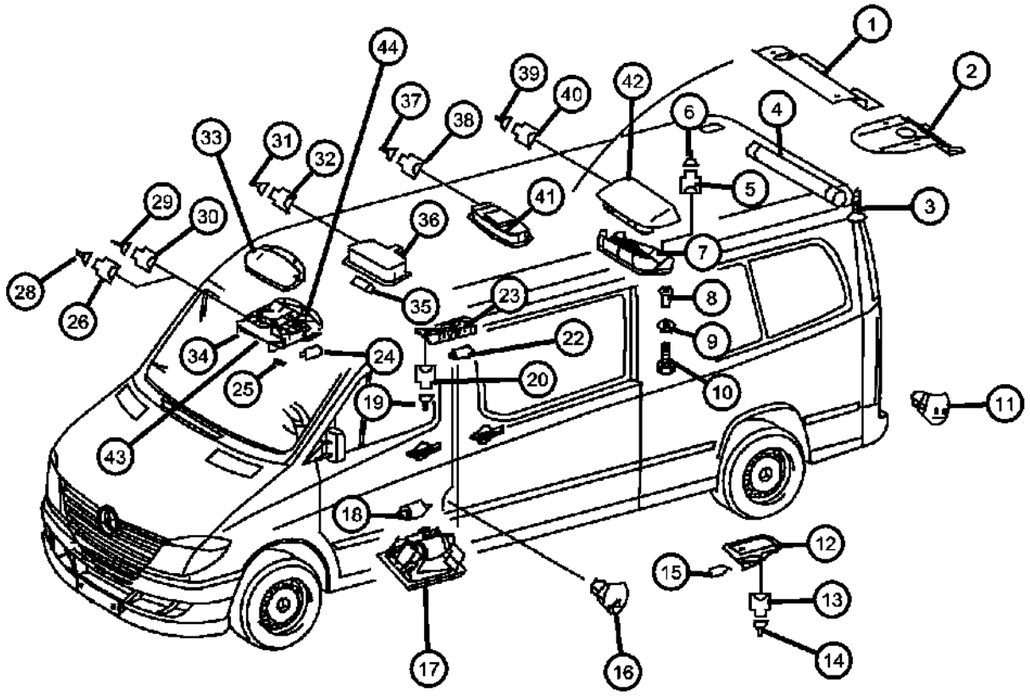

ITEM	PART NUMBER	QTY	LINE	SERIES	BODY	ENGINE	TRANS	TRIM	DESCRIPTION
43	04862636AA	1	2, 3, 6, 7	L		EG2, EXM	DGZ		LAMP, Front Combination, With [CUN+NHW]
44									CONSOLE, Overhead
	68004968AA	1	2, 3, 6, 7	L		EG2, EXM	DGZ		With [GWA Or GW9+NHW Or CUN]
	68004970AA	1	2, 3, 6, 7	L		EG2, EXM	DGZ		With [CUN+NHW+LSA]
	68004971AA	1	2, 3, 6, 7	L		EG2, EXM	DGZ		With [GWA Or GW9+LSA+NHW+CUN]

SPRINTER (VB)

SERIES	LINE	BODY	ENGINE	TRANSMISSION
L = LOWLINE	3 = HD DODGE 2WD 2 = Med. Duty DODGE 2WD	03 = CAB CHASSIS WHEEL BASE 3 05 = CAB CHASSIS WHEEL BASE 5 13 = 119 WB 53 = 119 WB 15 = VAN WHEEL BASE 5 55 = WAGON WHEEL BASE 5 17 = VAN WHEEL BASE 7	EG2 = 3.5L V6 Gas Engine EXM = 3.0L V6 Turbo Diesel Engine	DGZ = 5-Speed Auto W5A380 Transmission

Clearance Roof Lamps
Figure 8-1160

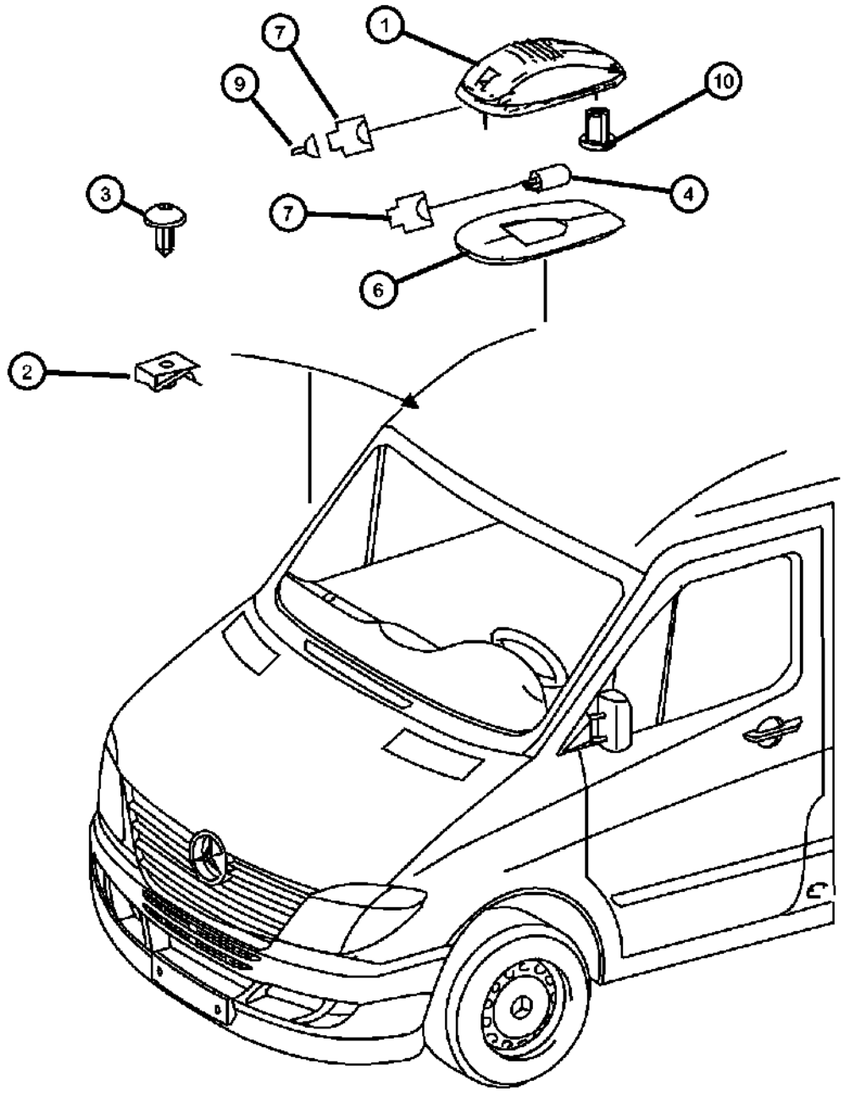

ITEM	PART NUMBER	QTY	LINE	SERIES	BODY	ENGINE	TRANS	TRIM	DESCRIPTION
1	68012153AA	3	3, 7	L	03, 05	EG2, EXM	DGZ		LAMP
2	68012153AA	3							CLIP, Instrument Panel, (NOT SERVICED)
3	06104565AA	2	2, 3, 6, 7	L		EG2, EXM	DGZ		SCREW
4	05104608AA	3	3, 7	L	03, 05	EG2, EXM	DGZ		BULB, 12V 5W
-5	68012129AA	2	2, 3, 6, 7	L		EG2, EXM	DGZ		BULB
6	68012156AA	5	3, 7	L	03, 05	EG2, EXM	DGZ		GASKET
7	05103655AA	6	3, 7	L	03, 05	EG2, EXM	DGZ		SOCKET, Roof Lamp
-8	05103754AA	1	2, 3, 6, 7	L		EG2, EXM	DGZ		INSULATOR, 2 Way Female
9	05133359AA	AR	2, 3, 6, 7	L		EG2, EXM	DGZ		TERMINAL, Female, [0.5 - 1.0 MM2; 6.3; E46/1, E46/2, E46/3]
10	68038097AA	6	3, 7	L	03, 05	EG2, EXM	DGZ		RETAINER

SPRINTER (VB)

SERIES	LINE	BODY	ENGINE	TRANSMISSION
L = LOWLINE	3 = HD DODGE 2WD 2 = Med. Duty DODGE 2WD	03 = CAB CHASSIS WHEEL BASE 3 05 = CAB CHASSIS WHEEL BASE 5 13 = 119 WB 53 = 119 WB 15 = VAN WHEEL BASE 5 55 = WAGON WHEEL BASE 5 17 = VAN WHEEL BASE 7	EG2 = 3.5L V6 Gas Engine EXM = 3.0L V6 Turbo Diesel Engine	DGZ = 5-Speed Auto W5A380 Transmission

Engine Wiring Harness
Figure 8-1210

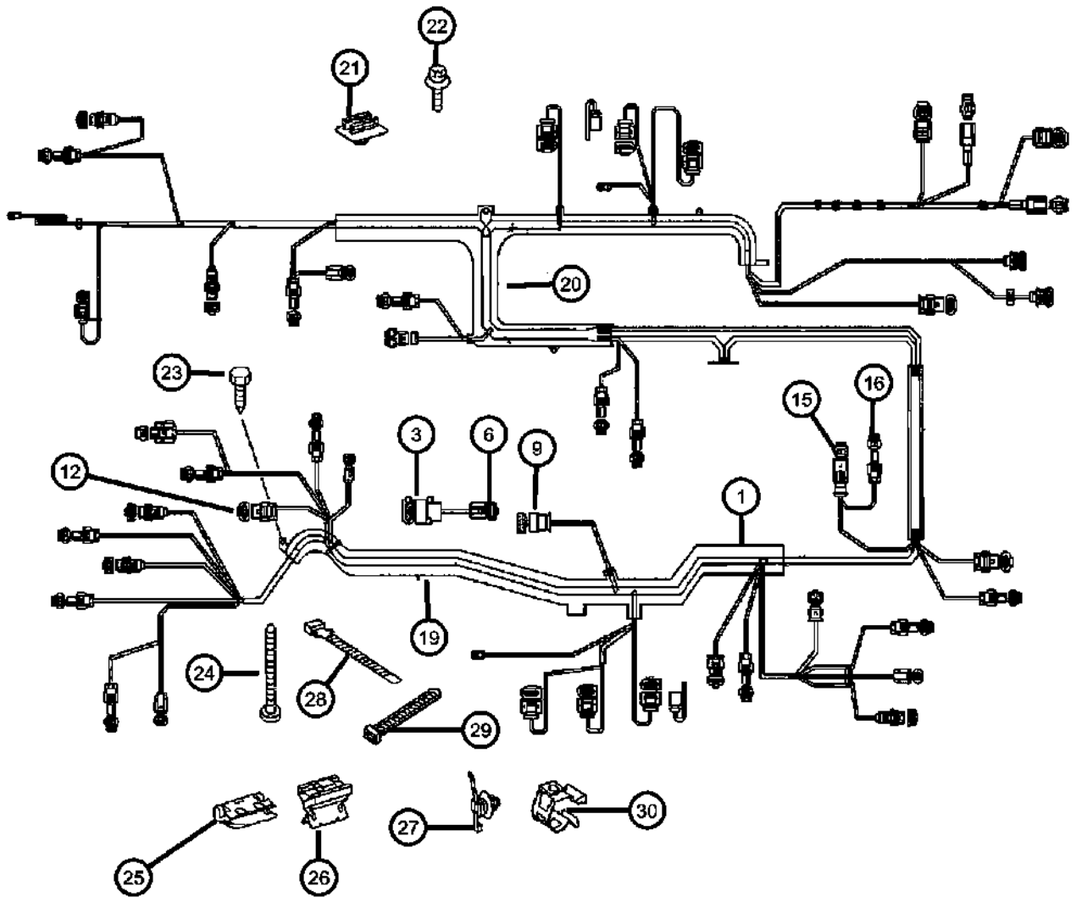

ITEM	PART NUMBER	QTY	LINE	SERIES	BODY	ENGINE	TRANS	TRIM	DESCRIPTION
1	68011857AA	1	2, 3, 6, 7	L		EG2	DGZ		WIRING, Engine
-2	68005411AA	1	2, 3, 6, 7	L		EG2	DGZ		WIRING, Starter / Generator Harness
3	68011337AA	1	2, 3, 6, 7	L		EG2, EXM	DGZ		CONNECTOR
-4									GROMMET
	05103663AA	AR	2, 3, 6, 7	L		EG2	DGZ		Insulator Grommet / Blue [0.25 - 1.0 MM2]
	05120864AA	99	2, 3, 6, 7	L		EG2	DGZ		Insulator Grommet / Red [1.01 - 2.5 MM2]
-5	05120865AA	1	2, 3, 6, 7	L		EG2, EXM	DGZ		SEAL, Wiring, Green
6	68011283AA	1	2, 3, 6, 7	L		EG2, EXM	DGZ		CONNECTOR, [8Pin; X26]
-7									GASKET
	05120865AA	1	2, 3, 6, 7	L		EG2, EXM	DGZ		Green
	05138031AA	1	2, 3, 6, 7	L		EG2	DGZ		White
-8									GROMMET
	05103663AA	AR	2, 3, 6, 7	L		EG2	DGZ		[Blue 0.25 - 1.0 MM2]
	05120864AA	99	2, 3, 6, 7	L		EG2	DGZ		[Red 1.01 - 2.5 MM2]
9	68011377AA	1	2, 3, 6, 7	L		EG2	DGZ		CONNECTOR, [8 Pin; X26]
-10									TERMINAL
	68011882AA	AR	2, 3, 6, 7	L		EG2	DGZ		[0.75 - 1.0 MMS; X26]
	68011883AA	AR	2, 3, 6, 7	L		EG2	DGZ		[1.5 - 2.5 MM2; X26]
-11									GROMMET
	05103663AA	AR	2, 3, 6, 7	L		EG2	DGZ		[0.25 - 1.0 MM2; X26]
	05120864AA	99	2, 3, 6, 7	L		EG2	DGZ		[1.01 - 2.5 MM2; X26]
12	68011816AA	1	2, 3, 6, 7	L		EG2	DGZ		CONNECTOR, [X205]
-13									TERMINAL
	68011877AA	AR	2, 3, 6, 7	L		EG2	DGZ		[X205] Terminal
	68011878AA	AR	2, 3, 6, 7	L		EG2, EXM	DGZ		[X205]
-14	05161599AA	AR	2, 3, 6, 7	L		EG2	DGZ		SEAL, Wiring
15	68011329AA	1	2, 3, 6, 7	L		EG2	DGZ		CONNECTOR, [X26]
16	68011884AA	99	2, 3, 6, 7	L		EG2	DGZ		CONNECTOR, [X26]
-17	68011883AA	AR	2, 3, 6, 7	L		EG2	DGZ		TERMINAL, [1.5 - 2.5 MM2; X26]
-18									GASKET
	05120872AA	99	2, 3, 6, 7	L		EG2	DGZ		[1.5 - 2.5 MMS; X26]

SPRINTER (VB)

SERIES	LINE	BODY	ENGINE	TRANSMISSION
L = LOWLINE	3 = HD DODGE 2WD 2 = Med. Duty DODGE 2WD	03 = CAB CHASSIS WHEEL BASE 3 05 = CAB CHASSIS WHEEL BASE 5 13 = 119 WB 53 = 119 WB 15 = VAN WHEEL BASE 5 55 = WAGON WHEEL BASE 5 17 = VAN WHEEL BASE 7	EG2 = 3.5L V6 Gas Engine EXM = 3.0L V6 Turbo Diesel Engine	DGZ = 5-Speed Auto W5A380 Transmission

AR = use ase required - = Non illustrrated part

<< RETURN TO GROUP INDEX

Engine Wiring Harness
Figure 8-1210

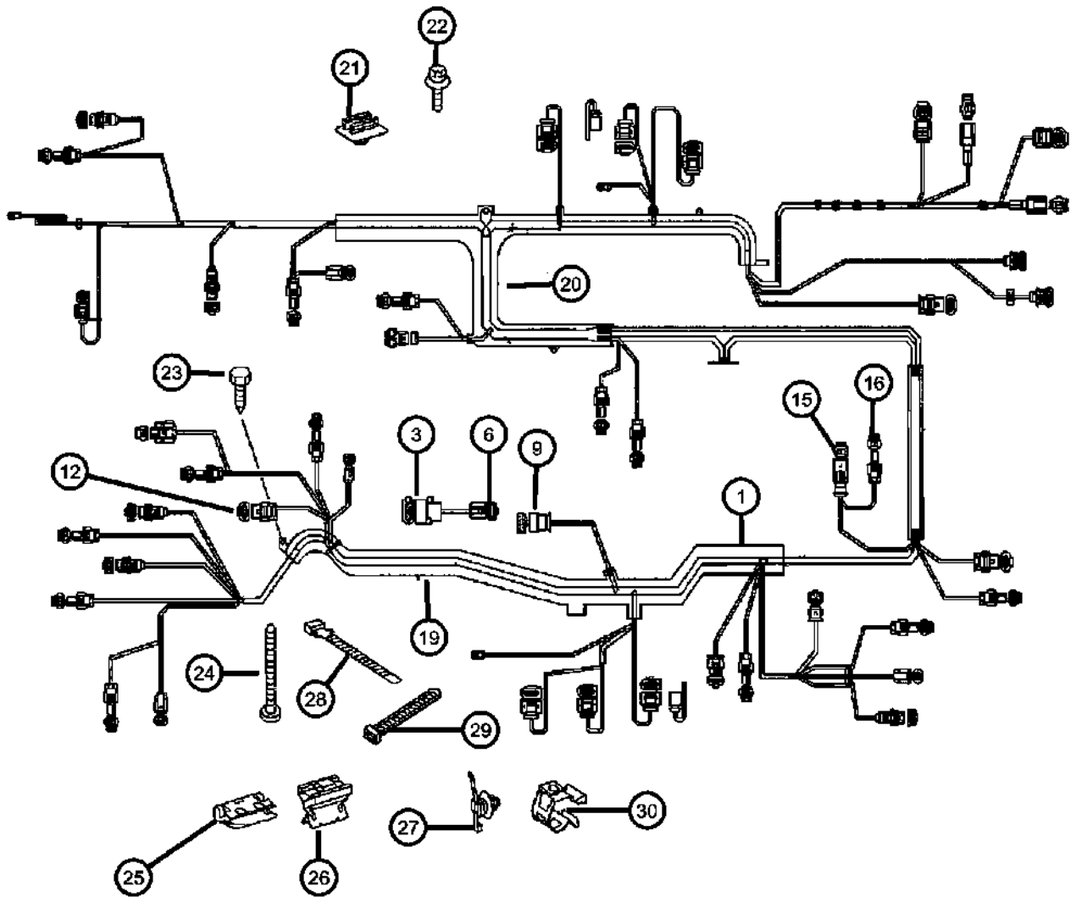

ITEM	PART NUMBER	QTY	LINE	SERIES	BODY	ENGINE	TRANS	TRIM	DESCRIPTION
	68011060AA	99	2, 3, 6, 7	L		EG2	DGZ		[4.0 MM2; X26]
19	68011795AA	1	2, 3, 6, 7	L		EG2	DGZ		RETAINER, Cable Rail
20	68011797AA	1	2, 3, 6, 7	L		EG2	DGZ		RETAINER, Cable Rail
21	68011920AA	1	2, 3, 6, 7	L		EG2	DGZ		RETAINER, Harness To Cylinder Cover
22									BOLT
	06104004AA	2	2, 3, 6, 7	L	13, 15, 17, 53, 55	EG2, EXM	DGZ		Harness To Cylinder Cover [M6x12]
	06104005AA	6	2, 3, 6, 7	L		EG2	DGZ		Harness To Cylinder Cover [M6x16]
23	05179069AA	1	2, 3, 6, 7	L		EG2	DGZ		SCREW, Tapping
24	06104675AA	3	2, 3, 6, 7	L		EG2	DGZ		SCREW, Harness To Intake Manifold [6x14]
25	68011872AA	4	2, 3, 6, 7	L		EG2	DGZ		CLIP
26	05159403AA	1	2, 3, 6, 7	L		EG2, EXM	DGZ		BRACKET
27	06104770AA	2	2, 3, 6, 7	L		EG2, EXM	DGZ		STRAP, [260x3.3 MM]
28	05096424AA	1	2, 3, 6, 7	L		EG2	DGZ		STRAP, Cable Rail To Filler Pipe[3.4x375 MM]
29									STRAP, Tie
	05080475AB	3	3, 7	L	03, 05	EG2	DGZ		[4.6x279 MM]
		3	2, 3, 6, 7	L	13, 15, 17, 53, 55	EG2, EXM	DGZ		[4.6x279 MM]
	06104762AA	1	2, 3, 6, 7	L		EG2	DGZ		[4.8x300 MM]
30	68011880AA	1	2, 3, 6, 7	L		EG2	DGZ		CLAMP

SPRINTER (VB)

SERIES	LINE	BODY	ENGINE	TRANSMISSION
L = LOWLINE	3 = HD DODGE 2WD 2 = Med. Duty DODGE 2WD	03 = CAB CHASSIS WHEEL BASE 3 05 = CAB CHASSIS WHEEL BASE 5 13 = 119 WB 53 = 119 WB 15 = VAN WHEEL BASE 5 55 = WAGON WHEEL BASE 5 17 = VAN WHEEL BASE 7	EG2 = 3.5L V6 Gas Engine EXM = 3.0L V6 Turbo Diesel Engine	DGZ = 5-Speed Auto W5A380 Transmission

Engine Wiring Harness
Figure 8-1220

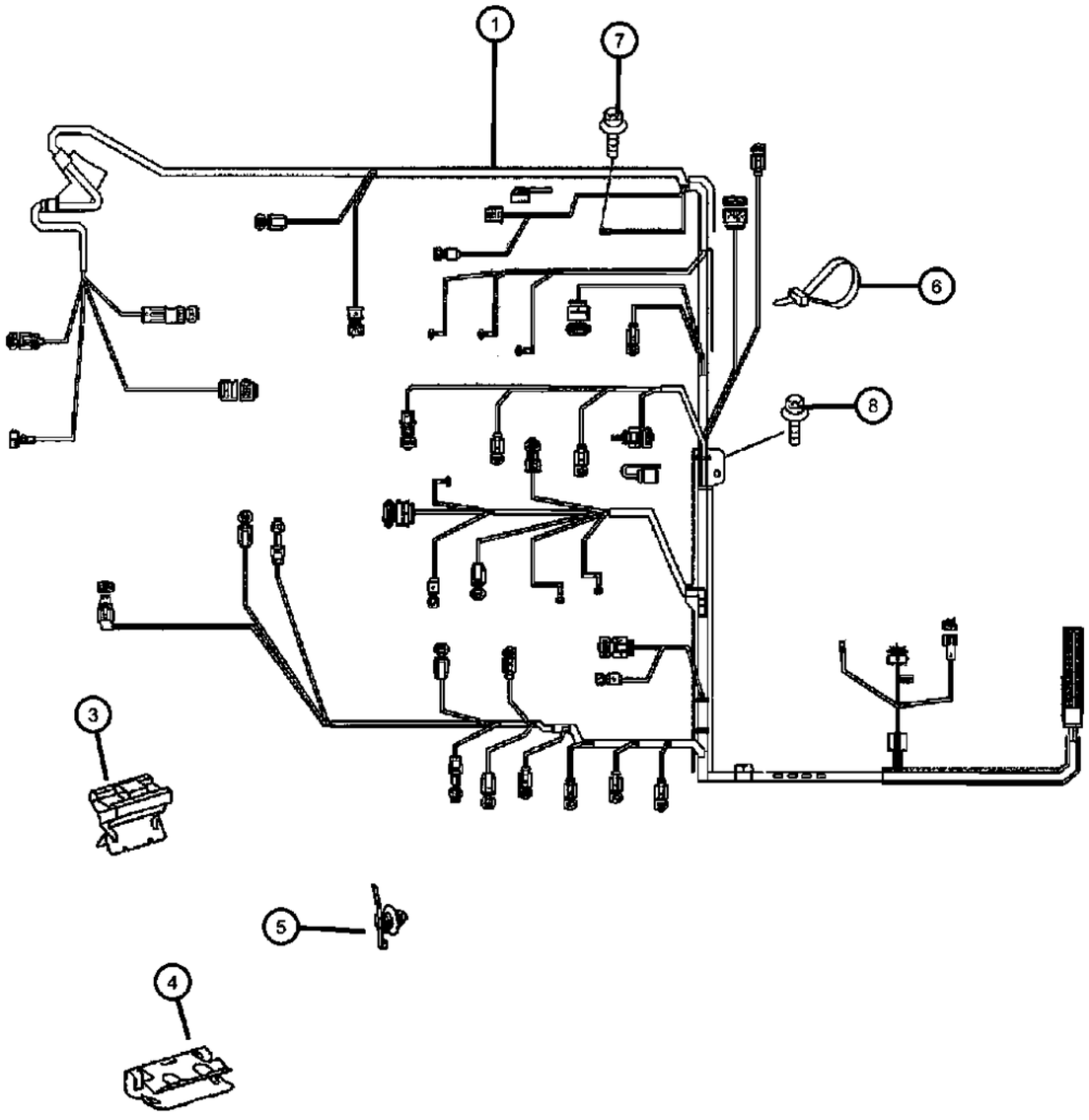

ITEM	PART NUMBER	QTY	LINE	SERIES	BODY	ENGINE	TRANS	TRIM	DESCRIPTION
1									WIRING, Engine
	68012488AA	1	2, 3, 6, 7	L		EXM	DGZ		Without [HBD]
	68015048AA	1	2, 3, 6, 7	L		EXM	DGZ		With [HBD]
-2	68005413AA	1	2, 3, 6, 7	L		EXM	DGZ		WIRING, Starter / Genarator Harness
3	05159403AA	1	2, 3, 6, 7	L		EG2, EXM	DGZ		BRACKET, [13X18 MM]
4	68011872AA	4	2, 3, 6, 7	L		EXM	DGZ		CLIP
5	06104770AA	4	2, 3, 6, 7	L		EG2, EXM	DGZ		STRAP, [260x3.3MM]
6									STRAP, Tie
	05080475AB	1	2, 3, 6, 7	L	13, 15, 17, 53, 55	EXM	DGZ		[4.6x279MM]
		1	3, 7	L	03, 05	EXM	DGZ		[4.6x279MM]
7	06104006AA	3	2, 3, 6, 7	L		EXM	DGZ		BOLT, [M6x20]
8	06104681AA	1	2, 3, 6, 7	L		EXM	DGZ		SCREW, [M6x15]

SPRINTER (VB)

SERIES	LINE	BODY	ENGINE	TRANSMISSION
L = LOWLINE	3 = HD DODGE 2WD 2 = Med. Duty DODGE 2WD	03 = CAB CHASSIS WHEEL BASE 3 05 = CAB CHASSIS WHEEL BASE 5 13 = 119 WB 53 = 119 WB 15 = VAN WHEEL BASE 5 55 = WAGON WHEEL BASE 5 17 = VAN WHEEL BASE 7	EG2 = 3.5L V6 Gas Engine EXM = 3.0L V6 Turbo Diesel Engine	DGZ = 5-Speed Auto W5A380 Transmission

Headlamp To Dash / Body Harness
Figure 8-1310

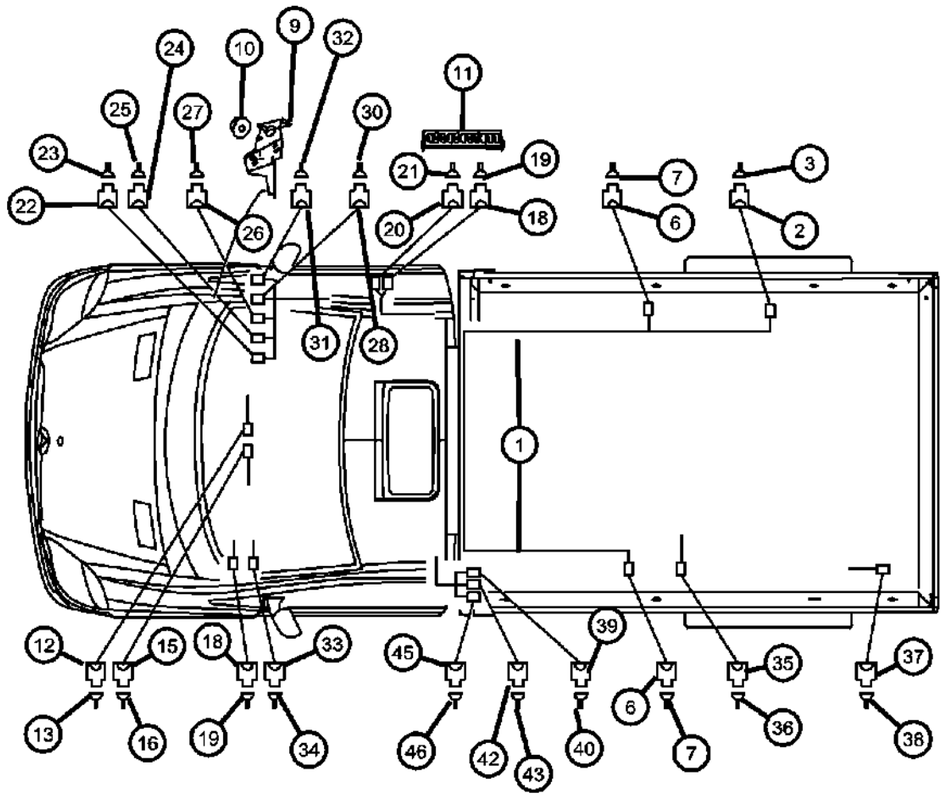

ITEM	PART NUMBER	QTY	LINE	SERIES	BODY	ENGINE	TRANS	TRIM	DESCRIPTION
1	68013432AA	1	2, 3, 6, 7	L		EG2, EXM	DGZ		WIRING, Body
2	68011283AA	1	2, 3, 6, 7	L		EG2, EXM	DGZ		CONNECTOR, Tank Connector [8 Pin; X25/15]
3									TERMINAL
	05103877AA	AR	2, 3, 6, 7	L		EG2	DGZ		[1.5 - 2.5 MM2; X25/15]
	05133353AA	AR	2, 3, 6, 7	L		EG2	DGZ		[0.5 - 1.0 MM2; X25/15]
		AR	2, 3, 6, 7	L		EXM	DGZ		[0.5 - 1.0 MM2; X25/15]
-4	05103663AA	AR	2, 3, 6, 7	L		EG2	DGZ		GROMMET, [0.25 - 1.0 MM2; X25/15]
-5	05120865AA	1	2, 3, 6, 7	L		EG2, EXM	DGZ		GASKET, [X25/15]
6	05138039AA	1	2, 3, 6, 7	L		EG2, EXM	DGZ		INSULATOR, Connector, Side Marker Lamps [3 Pin; X57/8 / X57/9]
7	05142198AA	1	2, 3, 6, 7	L		EG2, EXM	DGZ		TERMINAL, [X57/8 / X57/9]]
-8	05120860AA	1	2, 3, 6, 7	L		EG2, EXM	DGZ		GASKET, [1.6 - 1.9 MM2; X57/8; X57/9]
9	68013391AA	1	2, 3, 6, 7	L		EG2, EXM	DGZ		BRACKET, [Can] Connector To [A] Pillar, Right
10	68004878AA	2	3, 7	L	03, 05	EG2, EXM	DGZ		NUT
11	68015320AA	1	2, 3, 6, 7	L		EG2, EXM	DGZ		CONNECTOR, Pontential Distributor [22 Pin]
12	05120277AA	1	2, 3, 6, 7	L		EG2, EXM	DGZ		CONNECTOR, Wiring Repair, Transmission Neutral Position Connector [2 Pin; X162]
13	05103874AA	1	2, 3, 6, 7	L		EG2, EXM	DGZ		TERMINAL, [0.75 MM2; MQS; X162]
-14	05120860AA	1	2, 3, 6, 7	L		EG2, EXM	DGZ		GASKET, [1.6 - 1.9 MM2; MQS; X162]
15	05142197AA	2	2, 3, 6, 7	L		EG2, EXM	DGZ		INSULATOR, 2 Way, Connector Transmission Neutral / [2 Pin; X162]
16	05142198AA	1	2, 3, 6, 7	L		EG2, EXM	DGZ		TERMINAL, [0.75 MM2; MQS X162]
-17	05120860AA	1	2, 3, 6, 7	L		EG2, EXM	DGZ		GASKET, [1.6 - 1.9 MM2 X162]
18	05101166AA	1	2, 3, 6, 7	L		EG2, EXM	DGZ		CONNECTOR, Can [B] Voltage Distributor [2 Pin MQS; X30/24]
19	05103873AA	AR	7, 2, 3, 6	L		EG2, EXM	DGZ		TERMINAL, [0.75 MM2]
20	68011270AA	1	2, 3, 6, 7	L		EG2, EXM	DGZ		CONNECTOR, Can Bus [C] [3 Pin MQS; X30/27]
21	05103873AA	AR	2, 3, 6, 7	L		EG2, EXM	DGZ		TERMINAL, [0.75 MM2]

SPRINTER (VB)

SERIES	LINE	BODY	ENGINE	TRANSMISSION
L = LOWLINE	3 = HD DODGE 2WD 2 = Med. Duty DODGE 2WD	03 = CAB CHASSIS WHEEL BASE 3 05 = CAB CHASSIS WHEEL BASE 5 13 = 119 WB 53 = 119 WB 15 = VAN WHEEL BASE 5 55 = WAGON WHEEL BASE 5 17 = VAN WHEEL BASE 7	EG2 = 3.5L V6 Gas Engine EXM = 3.0L V6 Turbo Diesel Engine	DGZ = 5-Speed Auto W5A380 Transmission

AR = use ase required - = Non illustrrated part

<< RETURN TO GROUP INDEX

Headlamp To Dash / Body Harness
Figure 8-1310

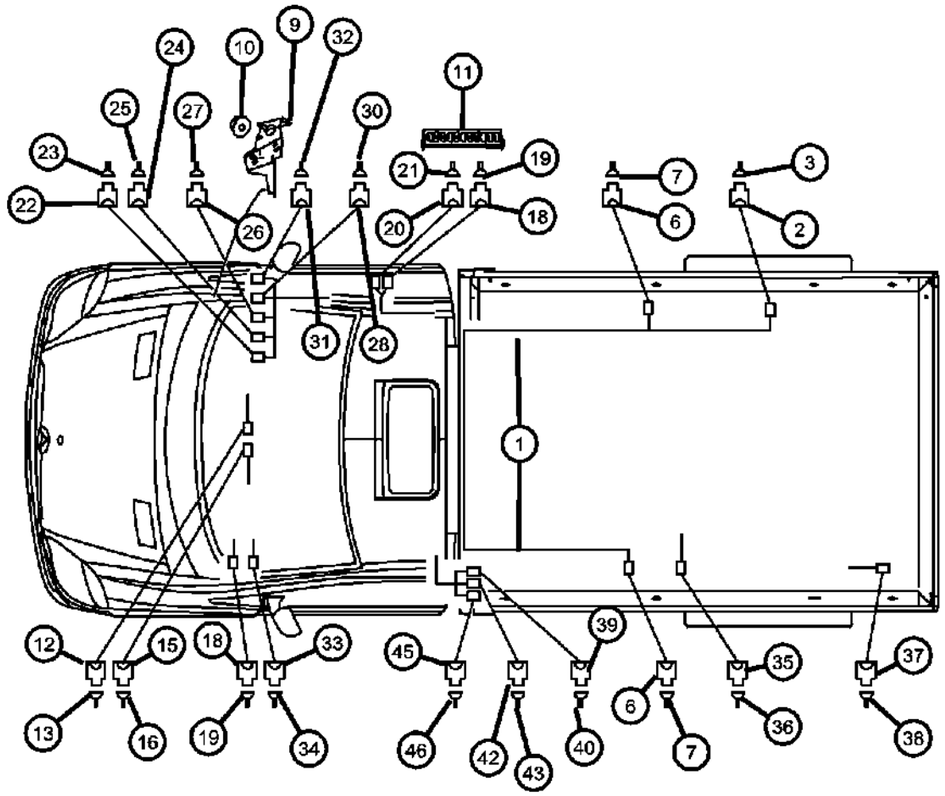

ITEM	PART NUMBER	QTY	LINE	SERIES	BODY	ENGINE	TRANS	TRIM	DESCRIPTION
22	05120260AA	1	3, 7	L	03, 05	EG2, EXM	DGZ		INSULATOR, 6 Way, Cockpit Interior Plug Connector [6 Pin X169/7]
23	05103873AA	AR	2, 3, 6, 7	L		EG2, EXM	DGZ		TERMINAL, [0.75 MM2]
24	68011252AA	1	2, 3, 6, 7	L		EG2, EXM	DGZ		CONNECTOR, Cockpit Interior Plug Connector [14 Pin X18/49]
25									TERMINAL
	05143897AA	AR	2, 3, 6, 7	L	53, 55, 03, 05	EG2, EXM	DGZ		[1.5 - 2.5 MM2; SLK 2.8; X 18/49]
	68016713AA	AR	2, 3, 6, 7	L		EG2, EXM	DGZ		[4.0 MM2 SLK 2.8, X18/49]
26	05120727AA	1	2, 3, 6, 7	L		EG2, EXM	DGZ		CONNECTOR, Cockpit Interior Plug Connector [18 Pin MQS; X18/55]
27	05103873AA	AR	2, 3, 6, 7	L		EG2, EXM	DGZ		TERMINAL, [0.75 MM2]
28	68016716AA	1	2, 3, 6, 7	L		EG2, EXM	DGZ		CONNECTOR, Wiring, Cockpit Interior Plug Connector [10 Pin, X18/60]
-29	68016718AA	1	2, 3, 6, 7	L		EG2, EXM	DGZ		CONNECTOR, Contact Carrier For [#28], Contact Carrier [10 Pin] For [#28]
30	05103873AA	AR	2, 3, 6, 7	L		EG2, EXM	DGZ		TERMINAL, [0.75 MM2]
31	68011253AA	1	2, 3, 6, 7	L		EG2, EXM	DGZ		CONNECTOR, Cockpit Interior Plug Connector [4 Pin SLK 2.8; X18/64]
32	05143897AA	AR	2, 3, 6, 7	L	03, 05, 53, 55	EG2, EXM	DGZ		TERMINAL, [1.5 - 2.5 MM2; SLK 2.8, X18/64]
33	05143907AA	1	6, 7, 2, 3	L		EG2, EXM	DGZ		CONNECTOR, Cockpit Interior Plug Connector [1 Pin LSK 8; X4/49]
34	68016737AA	AR	2, 3, 6, 7	L		EG2, EXM	DGZ		TERMINAL, [6.0 - 10.0 MM2; X4/49]
35	05120260AA	1	3, 7	L	03, 05	EG2, EXM	DGZ		INSULATOR, 6 Way, Connector [3] Way / Dump Truck [6 Pin X167]
36	05103873AA	AR	2, 3, 6, 7	L		EG2, EXM	DGZ		TERMINAL, [0.75 MM2]
37	05120618AA	2	2, 3, 6, 7	L		EG2, EXM	DGZ		INSULATOR, Tail Lift Connector [7 Pin X168]
38	05133385AA	AR	2, 3, 6, 7	L		EG2, EXM	DGZ		TERMINAL, Female, Round [X168]
39									CONNECTOR
	05143912AA	1	2, 3, 6, 7	L		EG2	DGZ		Conector Low Frame [6 Pin, X176/1]

SPRINTER (VB)

SERIES	LINE	BODY	ENGINE	TRANSMISSION
L = LOWLINE	3 = HD DODGE 2WD 2 = Med. Duty DODGE 2WD	03 = CAB CHASSIS WHEEL BASE 3 05 = CAB CHASSIS WHEEL BASE 5 13 = 119 WB 53 = 119 WB 15 = VAN WHEEL BASE 5 55 = WAGON WHEEL BASE 5 17 = VAN WHEEL BASE 7	EG2 = 3.5L V6 Gas Engine EXM = 3.0L V6 Turbo Diesel Engine	DGZ = 5-Speed Auto W5A380 Transmission

AR = use ase required - = Non illustrrated part

<< RETURN TO GROUP INDEX

Headlamp To Dash / Body Harness
Figure 8-1310

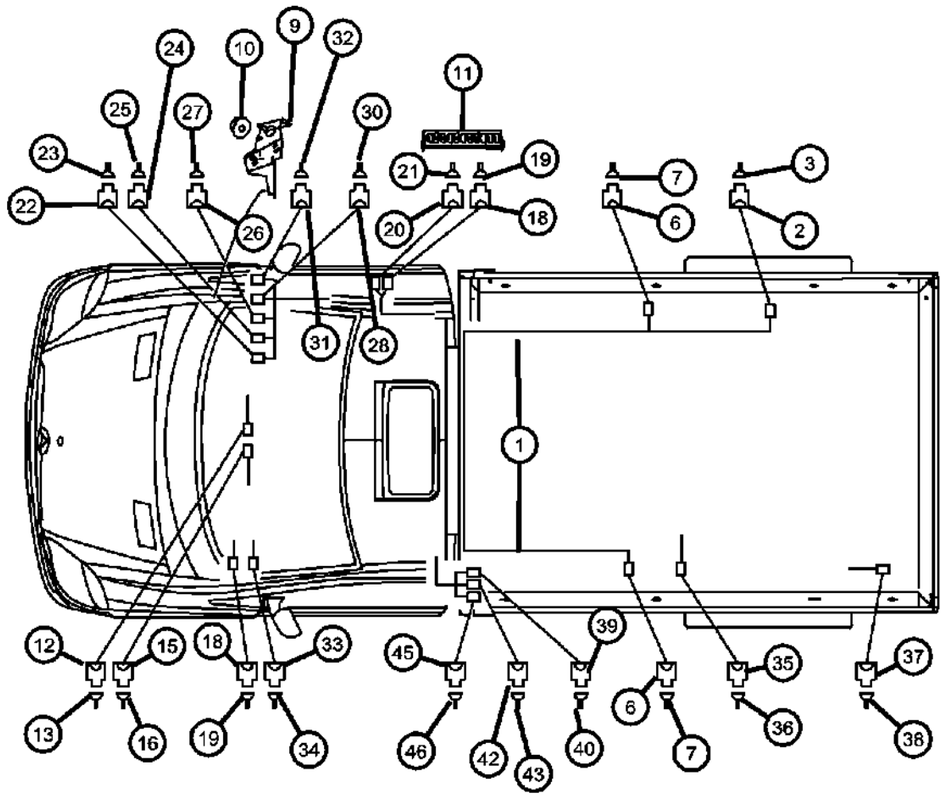

ITEM	PART NUMBER	QTY	LINE	SERIES	BODY	ENGINE	TRANS	TRIM	DESCRIPTION
		1	2, 3, 6, 7	L		EXM	DGZ		Conector Low Frame [6 Pin, X176/1]
40	05103874AA	1	2, 3, 6, 7	L		EG2, EXM	DGZ		TERMINAL, [0.75MM2]
-41	05120860AA	1	2, 3, 6, 7	L		EG2, EXM	DGZ		GASKET, [1.6 - 1.9 MM2; X176/1]
42	68011301AA	1	2, 3, 6, 7	L		EG2, EXM	DGZ		CONNECTOR, Connector Low Frame [6 Pin / COD. B X176/2]
43	05103874AA	1	2, 3, 6, 7	L		EG2, EXM	DGZ		TERMINAL, [0.75 MM2]
-44	05120860AA	1	2, 3, 6, 7	L		EG2, EXM	DGZ		GASKET, [1.6 - 1.9 MM2 / X176/2]
45	05120768AA	1	2, 3, 6, 7	L		EG2, EXM	DGZ		INSULATOR, FEMALE, Coupling [18 Pin] Low Frame Connector [X176/3]
46	05174907AA	99	2, 3, 6, 7	L		EG2, EXM	DGZ		TERMINAL, [0.75 - 1.0 MM2 / X172/3]
-47	68016742AA	99	3, 6, 7, 2	L		EG2, EXM	DGZ		TERMINAL, [1.5 - 2.5 MM2 / X176/3]
-48	05103663AA	AR	2, 3, 6, 7	L		EG2	DGZ		GROMMET, [0.25 - 1.0 MM2 / X176/3]
-49	05120865AA	1	2, 3, 6, 7	L		EG2, EXM	DGZ		GASKET, Dummy Plug [X176/3]

SPRINTER (VB)

SERIES	LINE	BODY	ENGINE	TRANSMISSION
L = LOWLINE	3 = HD DODGE 2WD 2 = Med. Duty DODGE 2WD	03 = CAB CHASSIS WHEEL BASE 3 05 = CAB CHASSIS WHEEL BASE 5 13 = 119 WB 53 = 119 WB 15 = VAN WHEEL BASE 5 55 = WAGON WHEEL BASE 5 17 = VAN WHEEL BASE 7	EG2 = 3.5L V6 Gas Engine EXM = 3.0L V6 Turbo Diesel Engine	DGZ = 5-Speed Auto W5A380 Transmission

Headlamp To Dash / Body Harness
Figure 8-1320

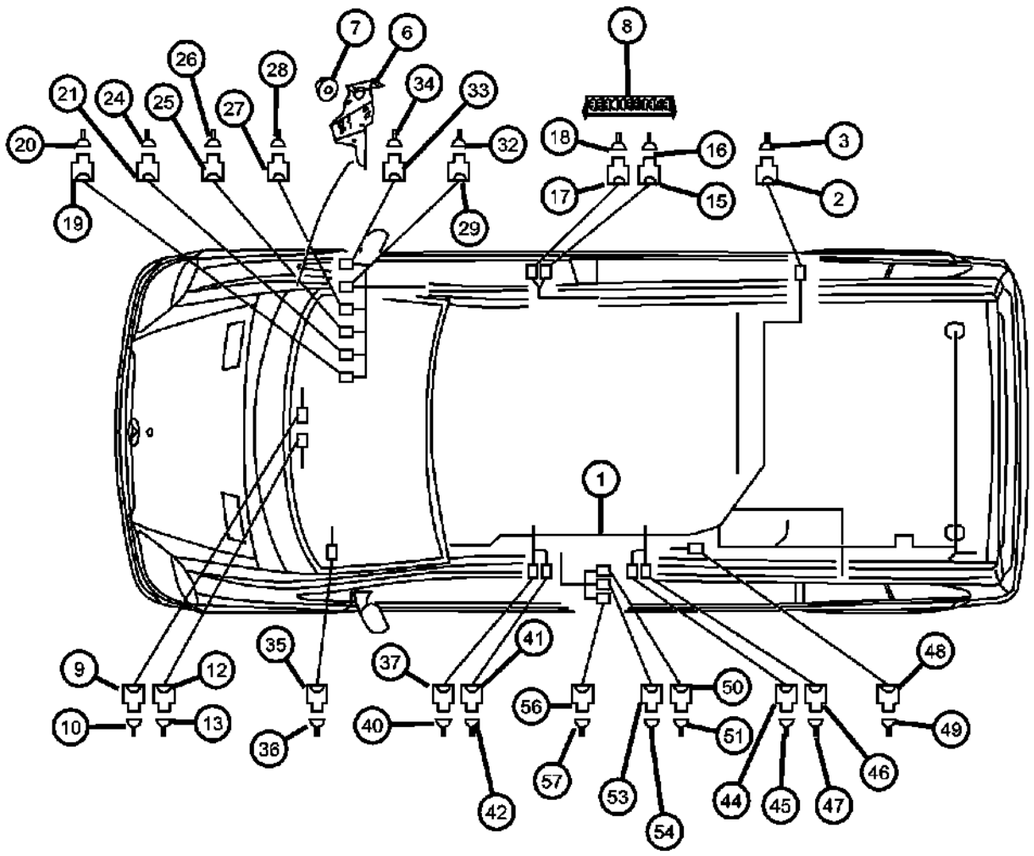

ITEM	PART NUMBER	QTY	LINE	SERIES	BODY	ENGINE	TRANS	TRIM	DESCRIPTION
1	68013432AA	1	2, 3, 6, 7	L		EG2, EXM	DGZ		WIRING, Body
2	68011283AA	1	2, 3, 6, 7	L		EG2, EXM	DGZ		CONNECTOR, Tank Connector [8 Pin SLK 2.8, X25/15]
3									TERMINAL
	05133353AA	AR	2, 3, 6, 7	L		EG2	DGZ		[0.75 - 1.0 MM2 SLK 2.8 X25/15]
		AR	2, 3, 6, 7	L		EXM	DGZ		[0.75 - 1.0 MM2 SLK 2.8 X25/15]
-4									TERMINAL
	05103877AA	AR	2, 3, 6, 7	L		EG2	DGZ		[1.5 - 2.5 MM2 SLK 2.8, X25 / 15]
		AR	2, 3, 6, 7	L		EXM	DGZ		[1.5 - 2.5 MM2 SLK 2.8, X25 / 15]
-5	05103663AA	AR	2, 3, 6, 7	L		EG2	DGZ		GROMMET
6	68013391AA	1	2, 3, 6, 7	L		EG2, EXM	DGZ		BRACKET, Can Connector To [A] Pillar Right
7									NUT
	68004878AA	3	7, 2, 3, 6	L	53, 55	EG2, EXM	DGZ		
		2	2, 3, 6, 7	L	13, 15, 17, 53, 55	EG2, EXM	DGZ		
8	68015320AA	1	2, 3, 6, 7	L		EG2, EXM	DGZ		CONNECTOR, Potential Distribuitor [22 Pin]
9	05120277AA	1	2, 3, 6, 7	L		EG2, EXM	DGZ		CONNECTOR, Wiring Repair, Connector Transmission Neutral [2 Pin MQS; X162]
10	05103874AA	1	2, 3, 6, 7	L		EG2, EXM	DGZ		TERMINAL, [0.75 MM2]
-11	05120860AA	1	2, 3, 6, 7	L		EG2, EXM	DGZ		GASKET, [1.6 - 1.9 MM2, X162]
12	05142197AA	2	2, 3, 6, 7	L		EG2, EXM	DGZ		INSULATOR, 2 Way, Connector Transmission Neutral [2 Pin, X162]
13	05142198AA	1	2, 3, 6, 7	L		EG2, EXM	DGZ		TERMINAL, [0.75 MM2]
-14	05120860AA	1	2, 3, 6, 7	L		EG2, EXM	DGZ		GASKET, [1.6 - 1.9 MM2, X162]
15	05101166AA	1	2, 3, 6, 7	L		EG2, EXM	DGZ		CONNECTOR, Can [B] Voltage Distributor [2 Pin MQS, X30]
16	05103873AA	AR	2, 3, 6, 7	L		EG2, EXM	DGZ		TERMINAL, [0.75 MM2]
17									CONNECTOR
	68011269AA	1	2, 3, 6, 7	L		EG2, EXM	DGZ		Can Bus [C] [2 Pin MQS, X30]
	68011270AA	1	2, 3, 6, 7	L		EG2, EXM	DGZ		Can Bus [C] [3 Pin MQS, X30]
18	05103873AA	AR	2, 3, 6, 7	L		EG2, EXM	DGZ		TERMINAL, [0.75 MM2]
19	05120260AA	1	2, 3, 6, 7	L	13, 15, 17, 53, 55	EG2, EXM	DGZ		INSULATOR, 6 Way, Cockpit Interior Plug Connector [6 Pin, X169/7]

SPRINTER (VB)

SERIES	LINE	BODY	ENGINE	TRANSMISSION
L = LOWLINE	3 = HD DODGE 2WD 2 = Med. Duty DODGE 2WD	03 = CAB CHASSIS WHEEL BASE 3 05 = CAB CHASSIS WHEEL BASE 5 13 = 119 WB 53 = 119 WB 15 = VAN WHEEL BASE 5 55 = WAGON WHEEL BASE 5 17 = VAN WHEEL BASE 7	EG2 = 3.5L V6 Gas Engine EXM = 3.0L V6 Turbo Diesel Engine	DGZ = 5-Speed Auto W5A380 Transmission

Headlamp To Dash / Body Harness
Figure 8-1320

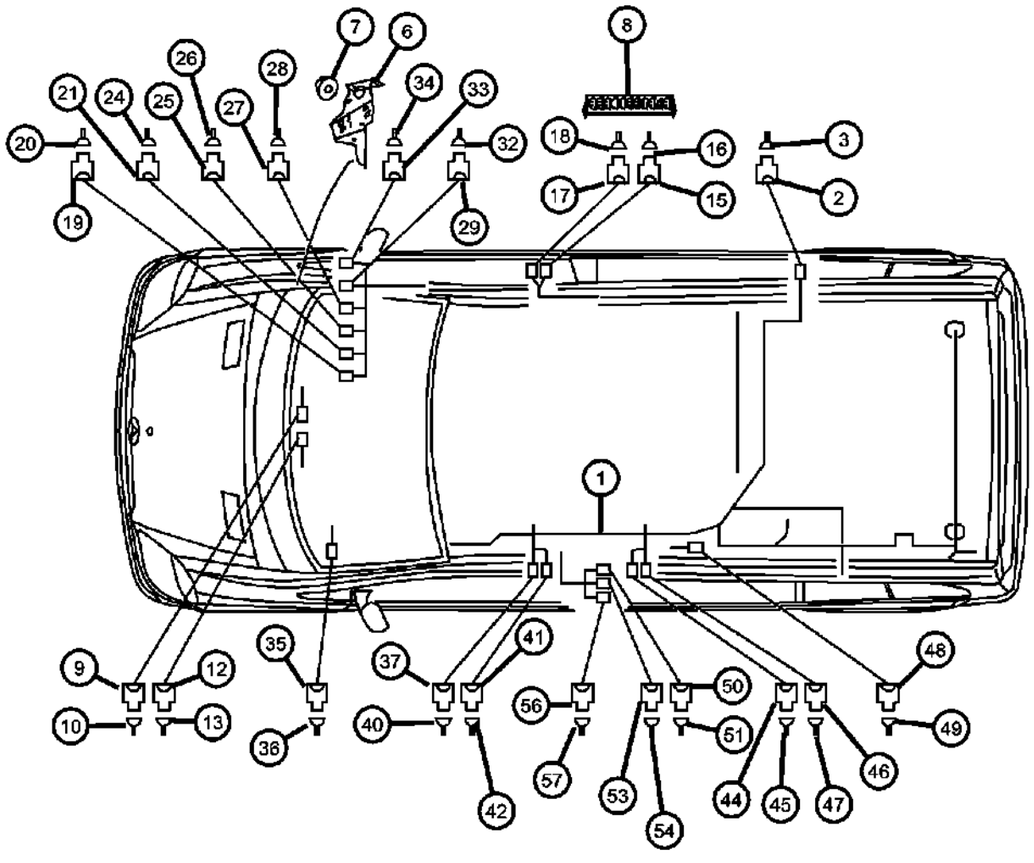

ITEM	PART NUMBER	QTY	LINE	SERIES	BODY	ENGINE	TRANS	TRIM	DESCRIPTION
20	05103873AA	AR	2, 3, 6, 7	L		EG2, EXM	DGZ		TERMINAL, [0.75 MM2]
21	68011209AA	1	2, 3, 6, 7	L		EG2, EXM	DGZ		CONNECTOR, Cockpit Interior Plug Connector [28 Pin MQS, X18/56]
-22	68016738AA	1	2, 3, 6, 7	L		EG2, EXM	DGZ		CONNECTOR, Cover For Call Out [21]
-23	68016739AA	1	2, 3, 6, 7	L		EG2, EXM	DGZ		CONNECTOR, Wiring, Cap For Callout [21]
24	05103873AA	AR	2, 3, 6, 7	L		EG2, EXM	DGZ		TERMINAL, [0.75 MM2]
25	68011252AA	1	2, 3, 6, 7	L		EG2, EXM	DGZ		CONNECTOR, Cockpit Interior Connector [14 Pin, X18/49]
26									TERMINAL
	05143897AA	AR	2, 3, 6, 7	L	03, 05, 53, 55	EG2, EXM	DGZ		[1.5 - 2.5 MM2; SLK 2.8, X18/49]
	68016713AA	AR	2, 3, 6, 7	L		EG2, EXM	DGZ		[4.0 MM2; SLK 2.8, X18/49]
27	05120727AA	1	2, 3, 6, 7	L		EG2, EXM	DGZ		CONNECTOR, Cockpit Interior Plug Connector [18 Pin MQS; X18/55]
28	05103873AA	AR	2, 3, 6, 7	L		EG2, EXM	DGZ		TERMINAL, [0.75 MM2]
29	68016716AA	1	6, 7, 2, 3	L		EG2, EXM	DGZ		CONNECTOR, Wiring, Cockpit Interior Plug Connector [10 Pin; X18/60]
-30	68016717AA	1	2, 3, 6, 7	L		EG2, EXM	DGZ		COVER, Cover For Callout [29]
-31	68016718AA	1	2, 3, 6, 7	L		EG2, EXM	DGZ		CONNECTOR, Contact Carrier [10 Pin MQS] For Callout [29]
32	05103873AA	AR	2, 3, 6, 7	L		EG2, EXM	DGZ		TERMINAL, [0.75 MM2]
33	68011253AA	1	2, 3, 6, 7	L		EG2, EXM	DGZ		CONNECTOR, Cockpit Interior Plug Connector [4 Pin SLK 2.8; X18/64]
34	05143897AA	AR	2, 3, 6, 7	L	03, 05, 53, 55	EG2, EXM	DGZ		TERMINAL, [1.5 - 2.5 MM2; SLK 2.8, X18/64]
35	05143907AA	1	2, 3, 6, 7	L		EG2, EXM	DGZ		CONNECTOR, Cockpit Plug Connector [1 Pin SLK 8, X4/49]
36	68016737AA	AR	3, 6, 7, 2	L		EG2, EXM	DGZ		TERMINAL, [6.0 - 10.0 MM2; X4/49]
37	68011209AA	1	2, 3, 6, 7	L		EG2, EXM	DGZ		CONNECTOR, Interior Roof Connector [28 Pin; MQS, X18/52]
-38	68016738AA	1	2, 3, 6, 7	L		EG2, EXM	DGZ		CONNECTOR, Cover For Callout [37]
-39	68016739AA	1	2, 3, 6, 7	L		EG2, EXM	DGZ		CONNECTOR, Wiring, Cap For Callout [37]

SPRINTER (VB)

SERIES	LINE	BODY	ENGINE	TRANSMISSION
L = LOWLINE	3 = HD DODGE 2WD 2 = Med. Duty DODGE 2WD	03 = CAB CHASSIS WHEEL BASE 3 05 = CAB CHASSIS WHEEL BASE 5 13 = 119 WB 53 = 119 WB 15 = VAN WHEEL BASE 5 55 = WAGON WHEEL BASE 5 17 = VAN WHEEL BASE 7	EG2 = 3.5L V6 Gas Engine EXM = 3.0L V6 Turbo Diesel Engine	DGZ = 5-Speed Auto W5A380 Transmission

AR = use ase required - = Non illustrrated part

<< RETURN TO GROUP INDEX

Headlamp To Dash / Body Harness
Figure 8-1320

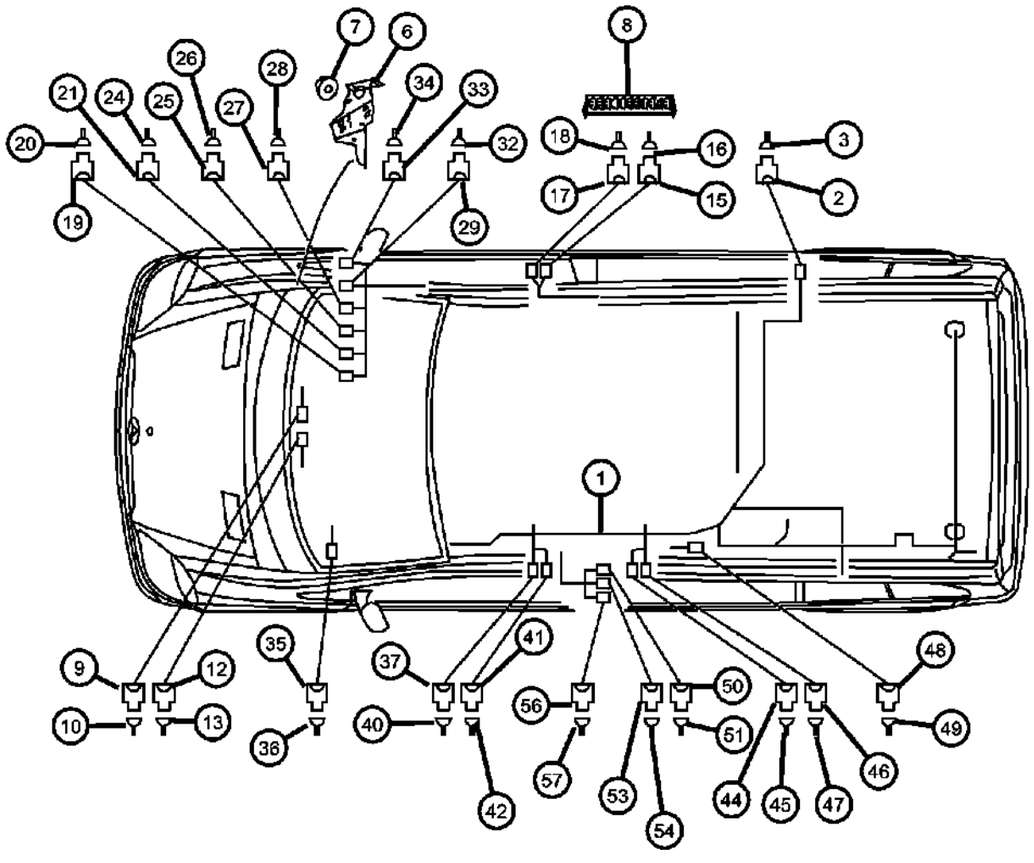

ITEM	PART NUMBER	QTY	LINE	SERIES	BODY	ENGINE	TRANS	TRIM	DESCRIPTION
40	05133990AA	99	2, 3, 6, 7	L	13, 15, 17, 53, 55	EG2, EXM	DGZ		TERMINAL, Male, [0.75 MM2]
41	68011252AA	1	2, 3, 6, 7	L		EG2, EXM	DGZ		CONNECTOR, Interior Roof Connector [14 Pin; X18/53]
42	05133945AA	AR	2, 3, 6, 7	L	13, 15, 17, 53, 55	EG2, EXM	DGZ		TERMINAL, [0.75 - 1.0 MM2]
-43	68016713AA	AR	2, 3, 6, 7	L		EG2, EXM	DGZ		TERMINAL, [4.0 MM2; SLK 2.8, X18/53]
44	05143907AA	1	2, 3, 6, 7	L		EG2, EXM	DGZ		CONNECTOR, Connector Roof Air Conditiontioning [1 Pin]
45	68016737AA	AR	2, 3, 6, 7	L		EG2, EXM	DGZ		TERMINAL, [6.0 - 10.0 MM2; X53/8]
46	05143907AA	1	2, 3, 6, 7	L		EG2, EXM	DGZ		CONNECTOR, Connector Roof Airconditioner [1 Pin; LSK 8, X53/8]
47	68016737AA	AR	2, 3, 6, 7	L		EG2, EXM	DGZ		TERMINAL, [6.0 - 10.0 MM2; X53/9]
48	05120618AA	2	2, 3, 6, 7	L		EG2, EXM	DGZ		INSULATOR, Stationary Heater Plug Connector [7 Pin; X72/10]
49	05133386AA	1	2, 3, 6, 7	L		EG2, EXM	DGZ		TERMINAL, Female, Contact Spring
50									CONNECTOR
	05143912AA	1	6, 7, 2, 3	L		EG2	DGZ		Connector Low Frame [6 Pin, X176/1]
		1	2, 3, 6, 7	L		EXM	DGZ		Connector Low Frame [6 Pin, X176/1]
51	05103874AA	1	2, 3, 6, 7	L		EG2, EXM	DGZ		TERMINAL, [0.75 MM2 MQS, X176/1]
-52	05120860AA	1	2, 3, 6, 7	L		EG2, EXM	DGZ		GASKET, [1.6 - 1.9 MM2; X176/1]
53	68011301AA	1	2, 3, 6, 7	L		EG2, EXM	DGZ		CONNECTOR, Connector Low Frame [6 Pin, COD. [B] X176/2]
54	05103874AA	1	2, 3, 6, 7	L		EG2, EXM	DGZ		TERMINAL, [0.75 MM2]
-55	05120860AA	1	2, 3, 6, 7	L		EG2, EXM	DGZ		GASKET, [1.6 - 1.9 MM2; X176/2]
56	05120768AA	1	2, 3, 6, 7	L		EG2, EXM	DGZ		INSULATOR, FEMALE, Connector Low Frame [18P] [X176/3]
57									TERMINAL
	05174907AA	99	2, 3, 6, 7	L		EG2, EXM	DGZ		[0.75 - 1.0 MM2; X176/3]
	68016742AA	99	2, 3, 6, 7	L		EG2, EXM	DGZ		[1.5 - 2.5 MM2; X176/3]
-58	05103663AA	AR	2, 3, 6, 7	L		EG2	DGZ		GROMMET, [0.25 - 1.0 MM2; X176/3]
-59	05120865AA	1	2, 3, 6, 7	L		EG2, EXM	DGZ		GASKET, Dummy Plug [X176/3]

SPRINTER (VB)

SERIES	LINE	BODY	ENGINE	TRANSMISSION
L = LOWLINE	3 = HD DODGE 2WD 2 = Med. Duty DODGE 2WD	03 = CAB CHASSIS WHEEL BASE 3 05 = CAB CHASSIS WHEEL BASE 5 13 = 119 WB 53 = 119 WB 15 = VAN WHEEL BASE 5 55 = WAGON WHEEL BASE 5 17 = VAN WHEEL BASE 7	EG2 = 3.5L V6 Gas Engine EXM = 3.0L V6 Turbo Diesel Engine	DGZ = 5-Speed Auto W5A380 Transmission

AR = use ase required - = Non illustrrated part

<< RETURN TO GROUP INDEX

Instrument Panel Wiring Harness
Figure 8-1410

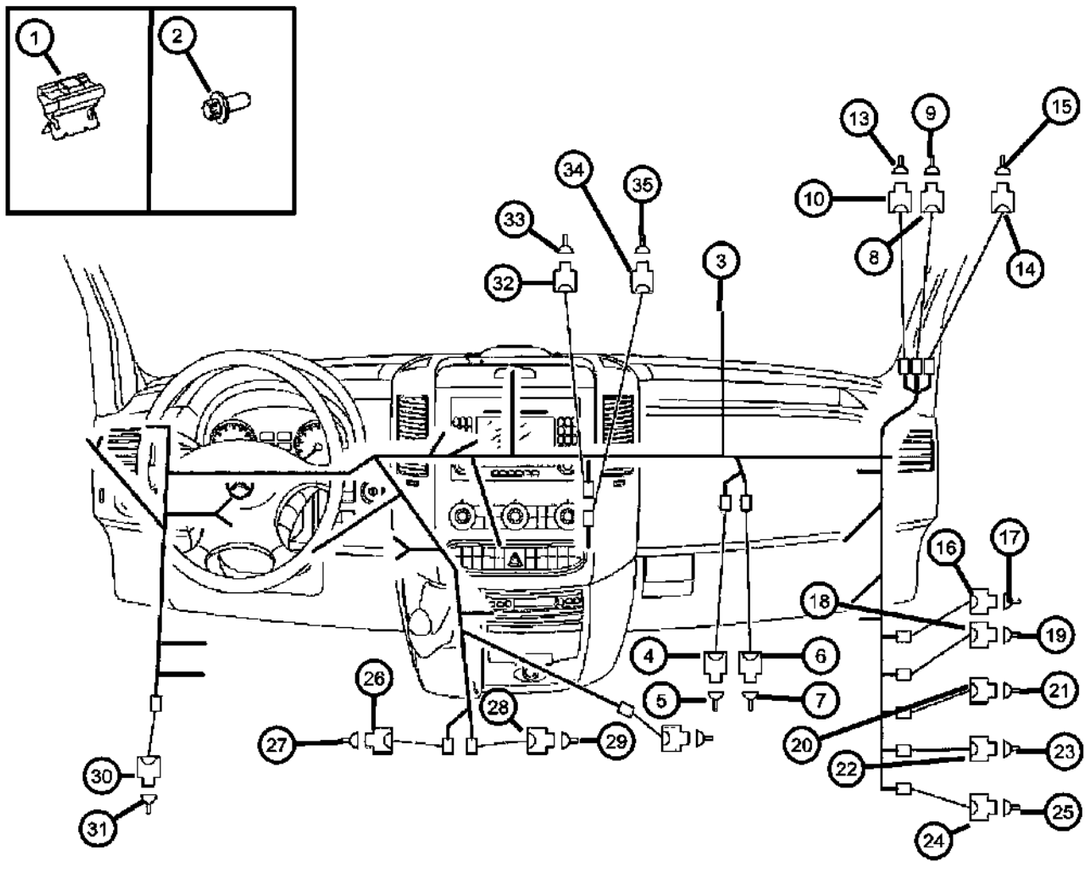

ITEM	PART NUMBER	QTY	LINE	SERIES	BODY	ENGINE	TRANS	TRIM	DESCRIPTION
1	05159403AA	1	2, 3, 6, 7	L		EG2, EXM	DGZ		BRACKET, Harness To Side Member
2	05073723AB	1	2, 3, 6, 7	L		EXM	DGZ		SCREW
3	68013433AA	1	2, 3, 6, 7	L		EG2, EXM	DGZ		WIRING, Instrument Panel
4	68011328AA	1	2, 3, 6, 7	L		EG2, EXM	DGZ		CONNECTOR, Wiring, [2 Pin ; X28/46]
5	68016728AA	AR	2, 3, 6, 7	L		EG2, EXM	DGZ		TERMINAL, [X28/46]
6	68011280AA	1	2, 3, 6, 7	L		EG2, EXM	DGZ		CONNECTOR, Wiring, [2 Pin; X28/46]
7	68016727AA	AR	2, 3, 6, 7	L		EG2, EXM	DGZ		TERMINAL, [X28/46]
8									CONNECTOR
	68011254AA	1	2, 3, 6, 7	L	13, 15, 17	EG2, EXM	DGZ		Cockpit Roof Connector [6 Pin; X18 / 23]
		1	2, 3, 6, 7	L	03, 05, 53, 55	EG2, EXM	DGZ		Cockpit Roof Connector [6 Pin; X18 / 23]
9									TERMINAL
	05143897AA	AR	2, 3, 6, 7	L	03, 05, 53, 55	EG2, EXM	DGZ		[1.0 - 2.5 MM2: X18/23]
		AR	2, 3, 6, 7	L	13, 15, 17	EG2, EXM	DGZ		[1.0 - 2.5 MM2: X18/23]
10	68011209AA	1	2, 3, 6, 7	L		EG2, EXM	DGZ		CONNECTOR, Cockpit Connector Roof [28 Pin; X18/51]
-11	68016738AA	1	2, 3, 6, 7	L		EG2, EXM	DGZ		CONNECTOR, Cover For Callout [# 10]
-12	68016739AA	1	2, 3, 6, 7	L		EG2, EXM	DGZ		CONNECTOR, Wiring, Cover Cap To Callout [#10]
13									TERMINAL
	05103873AA	3	3, 7	L	03, 05	EG2, EXM	DGZ		[0.75 MM2 MQS; X18/51]
		3	2, 3, 6, 7	L	13, 15, 17, 53, 55	EG2, EXM	DGZ		[0.75 MM2 MQS; X18/51]
14	05103754AA	1	2, 3, 6, 7	L		EG2, EXM	DGZ		INSULATOR, 2 Way Female, Cockpit Connector Roof [2 Pin; X85/22]
15	05133359AA	AR	2, 3, 6, 7	L		EG2, EXM	DGZ		TERMINAL, Female, [0.5 - 1.0 MM2; / 6.3; X85/22]
16									INSULATOR, 6 Way
	05120260AA	1	2, 3, 6, 7	L	13, 15, 17, 53, 55	EG2, EXM	DGZ		Cockpit / Interior Plug [6-Pin; X169/7]
		1	3, 7	L	03, 05	EG2, EXM	DGZ		Cockpit / Interior Plug [6-Pin; X169/7]
17									TERMINAL, Male

SPRINTER (VB)

SERIES	LINE	BODY	ENGINE	TRANSMISSION
L = LOWLINE	3 = HD DODGE 2WD 2 = Med. Duty DODGE 2WD	03 = CAB CHASSIS WHEEL BASE 3 05 = CAB CHASSIS WHEEL BASE 5 13 = 119 WB 53 = 119 WB 15 = VAN WHEEL BASE 5 55 = WAGON WHEEL BASE 5 17 = VAN WHEEL BASE 7	EG2 = 3.5L V6 Gas Engine EXM = 3.0L V6 Turbo Diesel Engine	DGZ = 5-Speed Auto W5A380 Transmission

AR = use ase required - = Non illustrrated part

<< RETURN TO GROUP INDEX

Instrument Panel Wiring Harness
Figure 8-1410

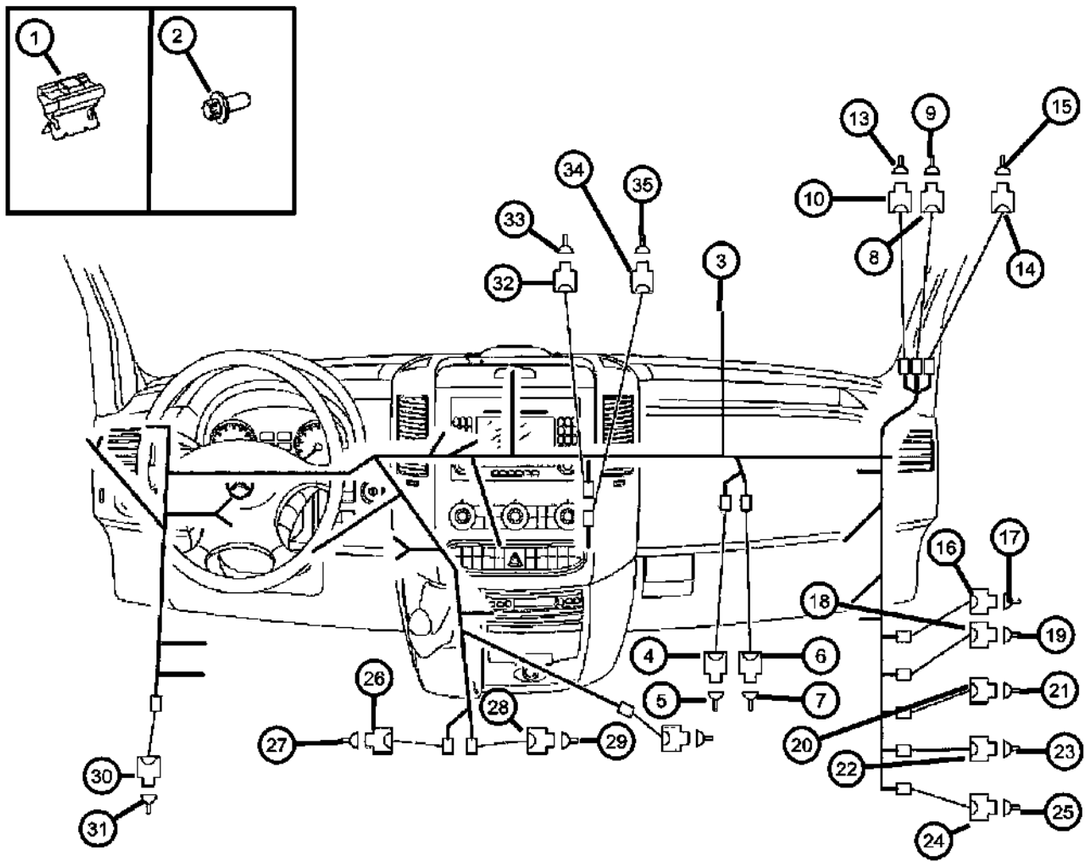

ITEM	PART NUMBER	QTY	LINE	SERIES	BODY	ENGINE	TRANS	TRIM	DESCRIPTION
	05133990AA	99	2, 3, 6, 7	L	13, 15, 17, 53, 55	EG2, EXM	DGZ		[0.75 MM2; X169/7]
		99	3, 7	L	03, 05	EG2, EXM	DGZ		[0.75 MM2; X169/7]
18	68011342AA	1	2, 3, 6, 7	L		EG2, EXM	DGZ		CONNECTOR, [28 Pin; x18/56]
19									TERMINAL, Male
	05133990AA	99	2, 3, 6, 7	L	13, 15, 17, 53, 55	EG2, EXM	DGZ		[0.75 MM2; X18/56]
		99	3, 7	L	03, 05	EG2, EXM	DGZ		[0.75 MM2; X18/56]
20	68011327AA	1	2, 3, 6, 7	L		EG2, EXM	DGZ		CONNECTOR, Wiring, [18 Pin;X15/55]
21									TERMINAL, Male
	05133990AA	99	2, 3, 6, 7	L	13, 15, 17, 53, 55	EG2, EXM	DGZ		[0.75 MM2;X18/55]
		99	3, 7	L	03, 05	EG2, EXM	DGZ		[0.75 MM2;X18/55]
22	68011378AA	1	2, 3, 6, 7	L		EG2, EXM	DGZ		CONNECTOR, [10 Pin; X18/60]
23									TERMINAL, Male
	05133990AA	99	2, 3, 6, 7	L	13, 15, 17, 53, 55	EG2, EXM	DGZ		[0.75 MM2; X18/60]
		99	3, 7	L	03, 05	EG2, EXM	DGZ		[0.75 MM2; X18/60]
24	68011362AA	1	2, 3, 6, 7	L		EG2, EXM	DGZ		CONNECTOR, [4 Pin; X18/64]
25	68013258AA	AR	2, 3, 6, 7	L		EG2, EXM	DGZ		TERMINAL, [1.0 - 2.5 MM2; X18/64]
26	68011358AA	1	2, 3, 6, 7	L		EG2, EXM	DGZ		CONNECTOR, Wiring, Tach Connector [4 Pin; X2/5]
27	68013257AA	AR	2, 3, 6, 7	L		EG2, EXM	DGZ		TERMINAL, [0.5 - 1.0 MM2; X2/5]
28	68011358AA	1	2, 3, 6, 7	L		EG2, EXM	DGZ		CONNECTOR, Wiring, [4 Pin; X2/7]
29	68013257AA	AR	2, 3, 6, 7	L		EG2, EXM	DGZ		TERMINAL, [0.5 - 1.0 MM2; X2/7]
30	68011379AA	1	2, 3, 6, 7	L		EG2, EXM	DGZ		CONNECTOR, [1 Pin; X4/49]
31	68016741AA	AR	2, 3, 6, 7	L		EG2, EXM	DGZ		TERMINAL, [X4/49]
32	68011229AA	1	2, 3, 6, 7	L		EG2, EXM	DGZ		CONNECTOR, Back Up Aid [6 Pin; X170]
33									TERMINAL
	05103873AA	3	3, 7	L	03, 05	EXM, EG2	DGZ		[0.75 MM2; MQS X170]
		3	2, 3, 6, 7	L	13, 15, 17, 53, 55	EG2, EXM	DGZ		[0.75 MM2; MQS X170]
34	68011344AA	1	2, 3, 6, 7	L	13, 15, 17	EG2, EXM	DGZ		CONNECTOR, Back Up Aid [6 Pin; X170]

SPRINTER (VB)

SERIES	LINE	BODY	ENGINE	TRANSMISSION
L = LOWLINE	3 = HD DODGE 2WD 2 = Med. Duty DODGE 2WD	03 = CAB CHASSIS WHEEL BASE 3 05 = CAB CHASSIS WHEEL BASE 5 13 = 119 WB 53 = 119 WB 15 = VAN WHEEL BASE 5 55 = WAGON WHEEL BASE 5 17 = VAN WHEEL BASE 7	EG2 = 3.5L V6 Gas Engine EXM = 3.0L V6 Turbo Diesel Engine	DGZ = 5-Speed Auto W5A380 Transmission

Instrument Panel Wiring Harness
Figure 8-1410

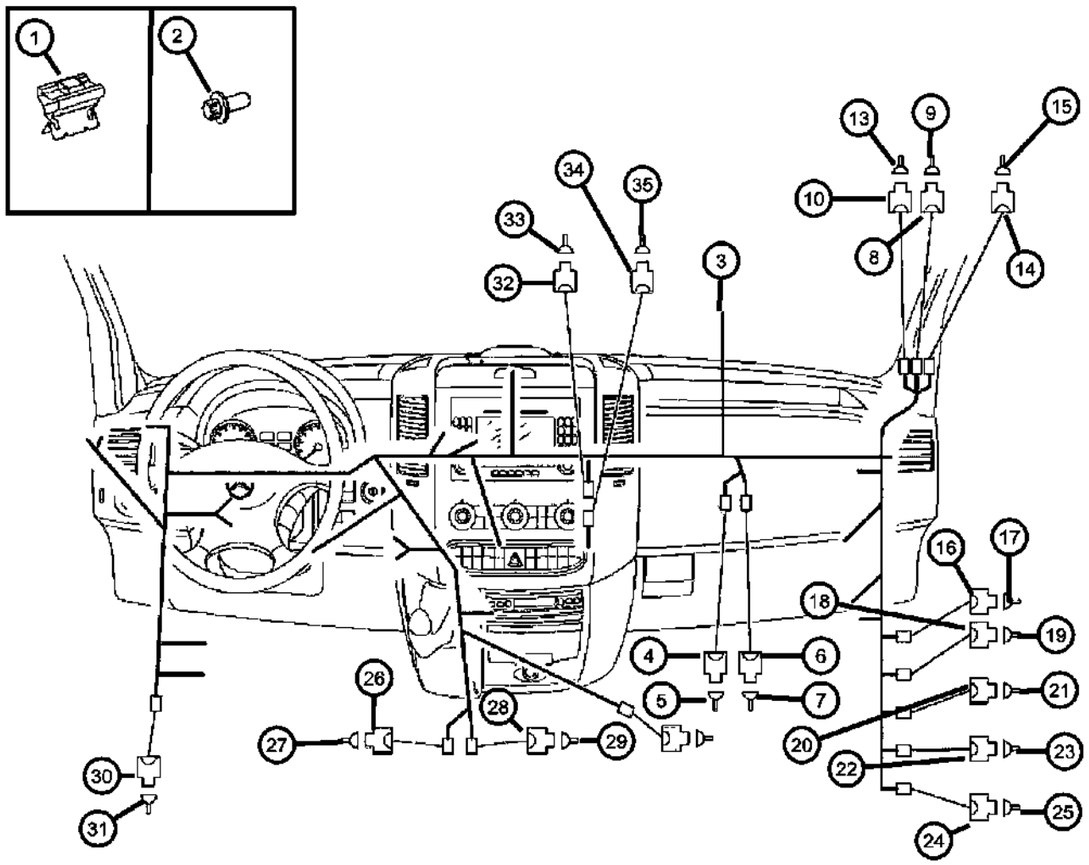

ITEM	PART NUMBER	QTY	LINE	SERIES	BODY	ENGINE	TRANS	TRIM	DESCRIPTION
35									TERMINAL, Male
	05133990AA	99	2, 3, 6, 7	L	13, 15, 17, 53, 55	EG2, EXM	DGZ		[0.75 MM2; X170]
		99	3, 7	L	03, 05	EG2, EXM	DGZ		[0.75 MM2; X170]

SPRINTER (VB)

SERIES	LINE	BODY	ENGINE	TRANSMISSION
L = LOWLINE	3 = HD DODGE 2WD 2 = Med. Duty DODGE 2WD	03 = CAB CHASSIS WHEEL BASE 3 05 = CAB CHASSIS WHEEL BASE 5 13 = 119 WB 53 = 119 WB 15 = VAN WHEEL BASE 5 55 = WAGON WHEEL BASE 5 17 = VAN WHEEL BASE 7	EG2 = 3.5L V6 Gas Engine EXM = 3.0L V6 Turbo Diesel Engine	DGZ = 5-Speed Auto W5A380 Transmission

Headlamp Range Adjustment Harness
Figure 8-1420

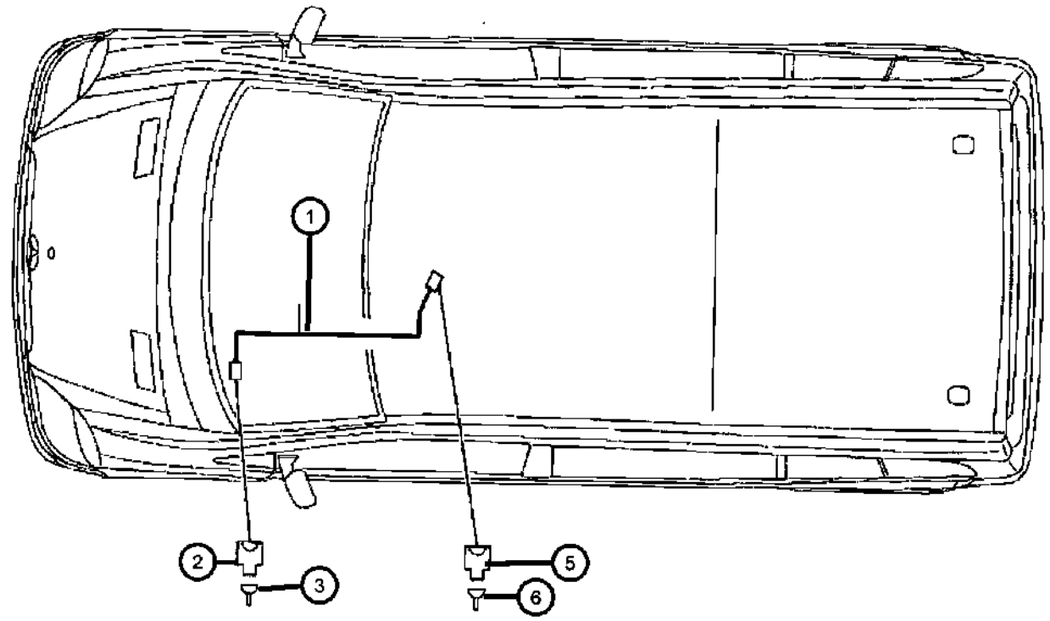

ITEM	PART NUMBER	QTY	LINE	SERIES	BODY	ENGINE	TRANS	TRIM	DESCRIPTION
1	68011457AA	1	2, 3	L		EG2, EXM	DGZ		WIRING, With [LM3]
2	05120278AA	1	7, 2, 3, 6	L		EG2, EXM	DGZ		CONNECTOR, [3 Pin; X62/72]
3	05103874AA	1	2, 3, 6, 7	L		EG2, EXM	DGZ		TERMINAL, [0.75 MM2; MQS; X62/72]
-4	05120860AA	1	2, 3, 6, 7	L		EG2, EXM	DGZ		GASKET, [1.6 - 1.9 MM2; MQS, X62/72]
5	05138039AA	1	2, 3, 6, 7	L		EG2, EXM	DGZ		INSULATOR, [3 Pin; X62/72]
6	05103880AA	AR	2, 3, 6, 7	L		EG2, EXM	DGZ		TERMINAL, [0.5 -1.0 MM2; JPT; X62/72]
-7	05103661AA	1	2, 3, 6, 7	L		EG2, EXM	DGZ		GASKET, [0.5-1.0 MM; X62/72]

SPRINTER (VB)

SERIES	LINE	BODY	ENGINE	TRANSMISSION
L = LOWLINE	3 = HD DODGE 2WD 2 = Med. Duty DODGE 2WD	03 = CAB CHASSIS WHEEL BASE 3 05 = CAB CHASSIS WHEEL BASE 5 13 = 119 WB 53 = 119 WB 15 = VAN WHEEL BASE 5 55 = WAGON WHEEL BASE 5 17 = VAN WHEEL BASE 7	EG2 = 3.5L V6 Gas Engine EXM = 3.0L V6 Turbo Diesel Engine	DGZ = 5-Speed Auto W5A380 Transmission

Frame Mounted Cable Harness
Figure 8-1505

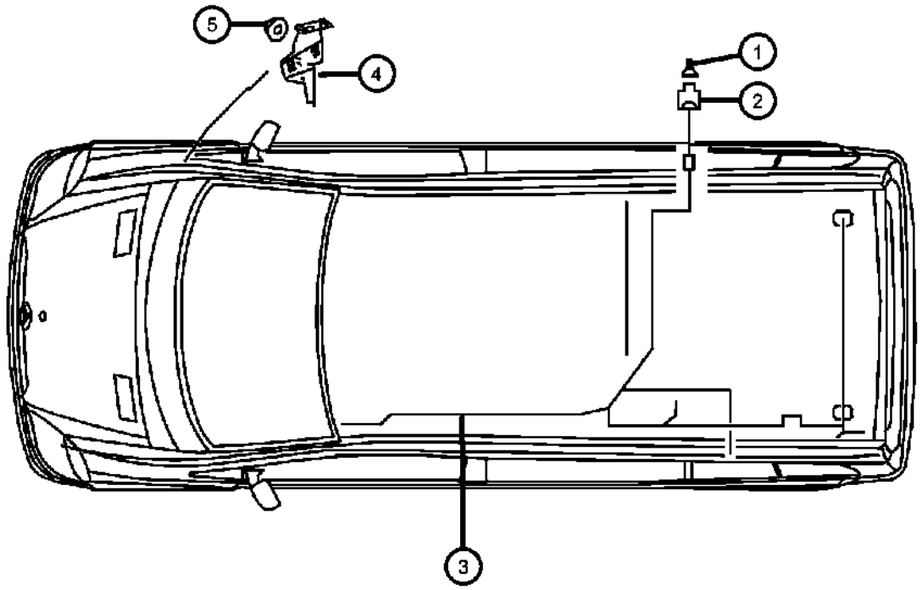

ITEM	PART NUMBER	QTY	LINE	SERIES	BODY	ENGINE	TRANS	TRIM	DESCRIPTION
1	05133353AA	AR	2, 3, 6, 7	L		EG2	DGZ		TERMINAL
2	68011283AA	1	2, 3, 6, 7	L		EG2, EXM	DGZ		CONNECTOR, Tank Connector [8-PIN;x25/15]
3	68013432AA	1	2, 3, 6, 7	L		EG2, EXM	DGZ		WIRING, Body
4	68013391AA	1	2, 3, 6, 7	L		EG2, EXM	DGZ		BRACKET
5									NUT
	68004878AA	2	3, 7	L	03, 05	EXM	DGZ		Bracket Mounting [M6]
		2	2, 3, 6, 7	L	13, 15, 17, 53, 55	EG2, EXM	DGZ		Bracket Mounting [M6]

SPRINTER (VB)

SERIES	LINE	BODY	ENGINE	TRANSMISSION
L = LOWLINE	3 = HD DODGE 2WD 2 = Med. Duty DODGE 2WD	03 = CAB CHASSIS WHEEL BASE 3 05 = CAB CHASSIS WHEEL BASE 5 13 = 119 WB 53 = 119 WB 15 = VAN WHEEL BASE 5 55 = WAGON WHEEL BASE 5 17 = VAN WHEEL BASE 7	EG2 = 3.5L V6 Gas Engine EXM = 3.0L V6 Turbo Diesel Engine	DGZ = 5-Speed Auto W5A380 Transmission

Wiring Harness - Fuel Tank
Figure 8-1510

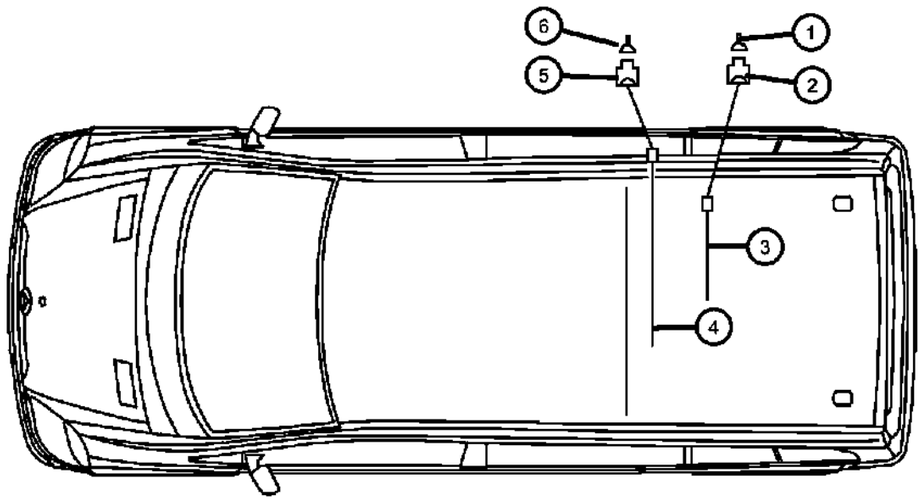

ITEM	PART NUMBER	QTY	LINE	SERIES	BODY	ENGINE	TRANS	TRIM	DESCRIPTION
1	05120734AA	1	2, 3, 6, 7	L		EG2, EXM	DGZ		TERMINAL, Male, [1.0-2.5 MM2;x25/16]
2	05120685AA	1	2, 3, 6, 7	L		EG2, EXM	DGZ		INSULATOR, Connector,Tank Filler [1-PIN;x25/16]
3	68013518AA	1	2, 3, 6, 7	L		EG2, EXM	DGZ		STRAP, Ground
4									WIRING, Fuel Tank
	68013519AA	1	2, 3, 6, 7	L		EXM	DGZ		Fuel Level Sensor
	68013520AA	1	2, 3, 6, 7	L		EG2	DGZ		Fuel Level Sensor
5	68011337AA	1	2, 3, 6, 7	L		EG2, EXM	DGZ		CONNECTOR, Tank Connector [8-PIN;x25/15]
6	68016743AA	1	2, 3, 6, 7	L		EG2, EXM	DGZ		TERMINAL, [X25/16]

SPRINTER (VB)

SERIES	LINE	BODY	ENGINE	TRANSMISSION
L = LOWLINE	3 = HD DODGE 2WD 2 = Med. Duty DODGE 2WD	03 = CAB CHASSIS WHEEL BASE 3 05 = CAB CHASSIS WHEEL BASE 5 13 = 119 WB 53 = 119 WB 15 = VAN WHEEL BASE 5 55 = WAGON WHEEL BASE 5 17 = VAN WHEEL BASE 7	EG2 = 3.5L V6 Gas Engine EXM = 3.0L V6 Turbo Diesel Engine	DGZ = 5-Speed Auto W5A380 Transmission

Front Door Wiring Harness & Control Module
Figure 8-1515

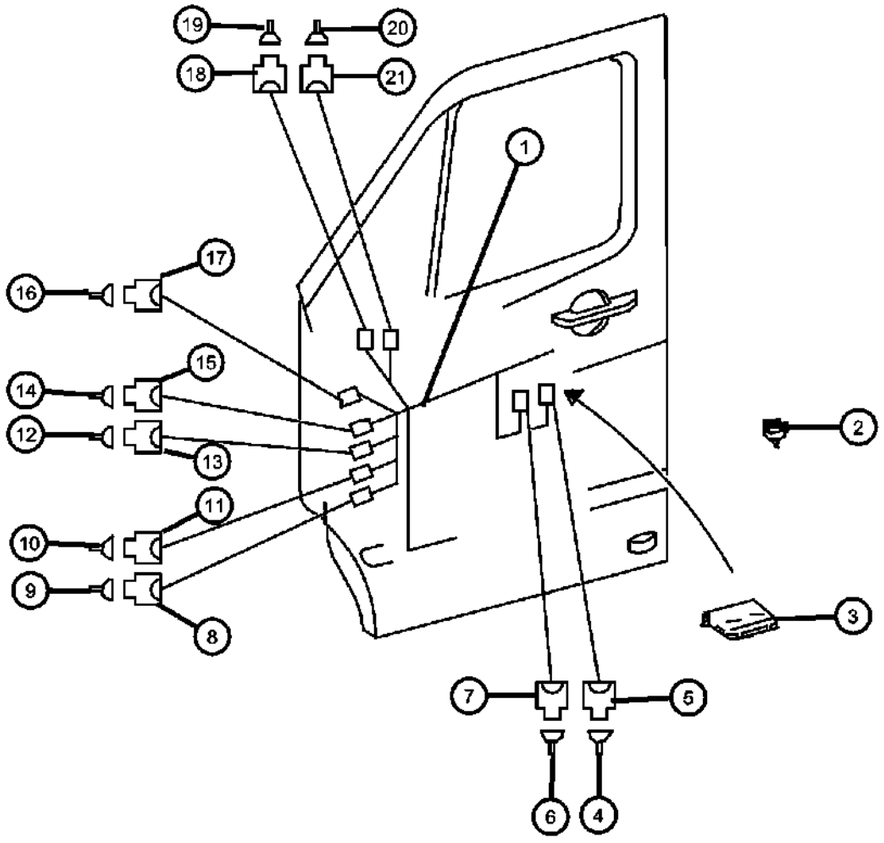

ITEM	PART NUMBER	QTY	LINE	SERIES	BODY	ENGINE	TRANS	TRIM	DESCRIPTION
1									WIRING, Door
	68013435AA	1	2, 3, 6, 7	L		EG2, EXM	DGZ		Left
	68013436AA	1	2, 3, 6, 7	L		EG2, EXM	DGZ		Right
2									CLIP, Retainer
	68013413AA	2	2, 3, 6, 7	L	13, 15, 17, 53, 55	EG2, EXM	DGZ		Entrance Lamp Separation Point 6.5-7MM
		2	3, 7	L	03, 05	EG2, EXM	DGZ		Entrance Lamp Separation Point 6.5-7MM
3									MODULE, Door
	68010055AA	1	2, 3, 6, 7	L		EG2, EXM	DGZ		Left Door
	68029085AA	1	2, 3, 6, 7	L		EG2, EXM	DGZ		With [GTB] Or [LBB] Or [JKG]
4	68011253AA	1	2, 3, 6, 7	L		EG2, EXM	DGZ		CONNECTOR, Door Control Unit 4-PIN;N69/1
5	68016713AA	AR	3, 6, 7, 2	L		EG2, EXM	DGZ		TERMINAL
6									TERMINAL
	05103873AA	3	3, 7	L	03, 05	EG2, EXM	DGZ		
		3	2, 3, 6, 7	L	13, 15, 17, 53, 55	EG2, EXM	DGZ		
7									CONNECTOR
	05138859AA	1	2, 3, 6, 7	L			DGZ		Door Control Unit 4-PIN;N69/1
	68011270AA	1	2, 3, 6, 7	L		EG2, EXM	DGZ		Door Control Unit 3-PIN;N69/1
	68011289AA	1	2, 3, 6, 7	L		EG2, EXM	DGZ		Door Control Unit 20-PIN;N69/1
8	68016718AA	1	2, 3, 6, 7	L		EG2, EXM	DGZ		CONNECTOR, Door Separation Point 10-PIN;X35/2
9									TERMINAL
	05103873AA	3	3, 7	L	03, 05	EG2, EXM	DGZ		
		3	2, 3, 6, 7	L	13, 15, 17, 53, 55	EG2, EXM	DGZ		
10	68016714AA	1	2, 3, 6, 7	L		EG2, EXM	DGZ		TERMINAL
11	68011362AA	1	2, 3, 6, 7	L		EG2, EXM	DGZ		CONNECTOR
12	68016713AA	AR	2, 3, 6, 7	L		EG2, EXM	DGZ		TERMINAL
13	68011253AA	1	2, 3, 6, 7	L		EG2, EXM	DGZ		CONNECTOR
14	05133990AA	3	2, 3, 6, 7	L	13, 15, 17, 53, 55	EG2, EXM	DGZ		TERMINAL, Male
15									CONNECTOR
	68011360AA	1	2, 3, 6, 7	L		EG2, EXM	DGZ		Door Separation Point 4-PIN;X35/1

SPRINTER (VB)

SERIES	LINE	BODY	ENGINE	TRANSMISSION
L = LOWLINE	3 = HD DODGE 2WD 2 = Med. Duty DODGE 2WD	03 = CAB CHASSIS WHEEL BASE 3 05 = CAB CHASSIS WHEEL BASE 5 13 = 119 WB 53 = 119 WB 15 = VAN WHEEL BASE 5 55 = WAGON WHEEL BASE 5 17 = VAN WHEEL BASE 7	EG2 = 3.5L V6 Gas Engine EXM = 3.0L V6 Turbo Diesel Engine	DGZ = 5-Speed Auto W5A380 Transmission

Front Door Wiring Harness & Control Module
Figure 8-1515

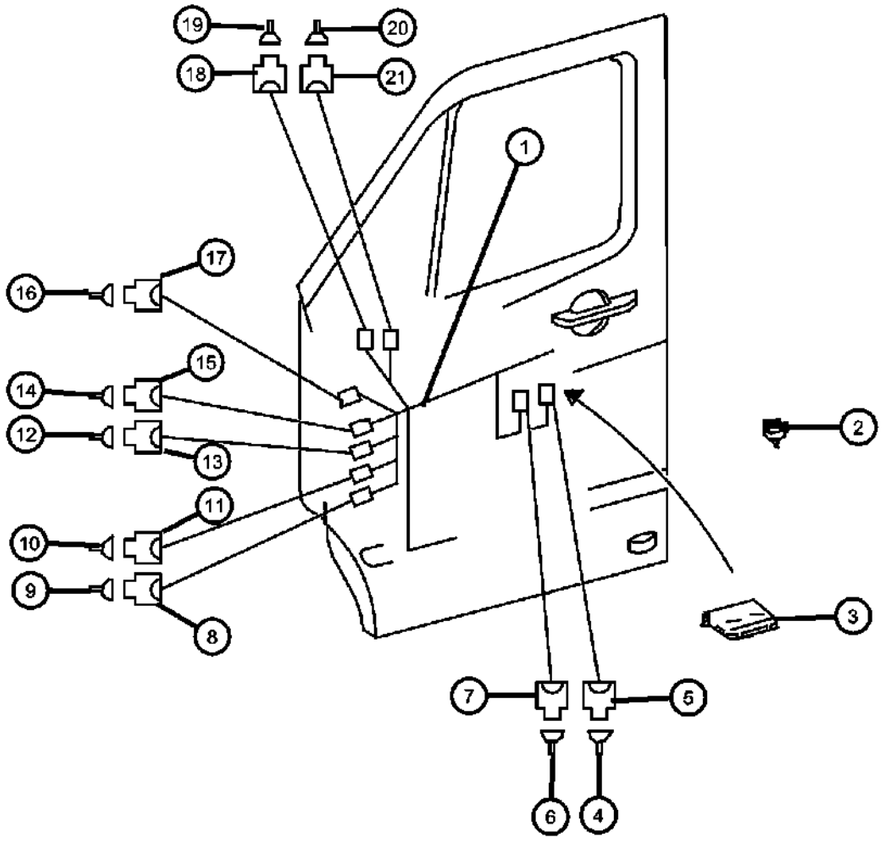

ITEM	PART NUMBER	QTY	LINE	SERIES	BODY	ENGINE	TRANS	TRIM	DESCRIPTION
	68011361AA	1	6, 7, 2, 3	L		EG2, EXM	DGZ		Door Separation Point 2-PIN;X35/44
	68011378AA	1	2, 3, 6, 7	L		EG2, EXM	DGZ		Door Separation Point 10-PIN;X35/2
16	68016713AA	AR	2, 3, 6, 7	L		EG2, EXM	DGZ		TERMINAL
17	05101166AA	1	2, 3, 6, 7	L		EG2, EXM	DGZ		CONNECTOR
18									CONNECTOR
	05120717AA	1	2, 3, 6, 7	L	13, 15, 17, 53, 55	EG2, EXM	DGZ		Outside Rearview Mirror Plug Connection 3-PIN,COD.A;X141/4
		1	3, 7	L	03, 05	EG2, EXM	DGZ		Outside Rearview Mirror Plug Connection 3-PIN,COD.A;X141/4
19									TERMINAL
	05103873AA	3	3, 7	L	03, 05	EG2, EXM	DGZ		
		3	2, 3, 6, 7	L	13, 15, 17, 53, 55	EG2, EXM	DGZ		
20	05133990AA	3	2, 3, 6, 7	L	13, 15, 17, 53, 55	EG2, EXM	DGZ		TERMINAL, Male
21	05183532AA	1	2, 3, 6, 7	L	13, 15, 17, 53, 55	EG2, EXM	DGZ		CONNECTOR

SPRINTER (VB)

SERIES	LINE	BODY	ENGINE	TRANSMISSION
L = LOWLINE	3 = HD DODGE 2WD 2 = Med. Duty DODGE 2WD	03 = CAB CHASSIS WHEEL BASE 3 05 = CAB CHASSIS WHEEL BASE 5 13 = 119 WB 53 = 119 WB 15 = VAN WHEEL BASE 5 55 = WAGON WHEEL BASE 5 17 = VAN WHEEL BASE 7	EG2 = 3.5L V6 Gas Engine EXM = 3.0L V6 Turbo Diesel Engine	DGZ = 5-Speed Auto W5A380 Transmission

Rear Door Wiring Harness & Control Module
Figure 8-1525

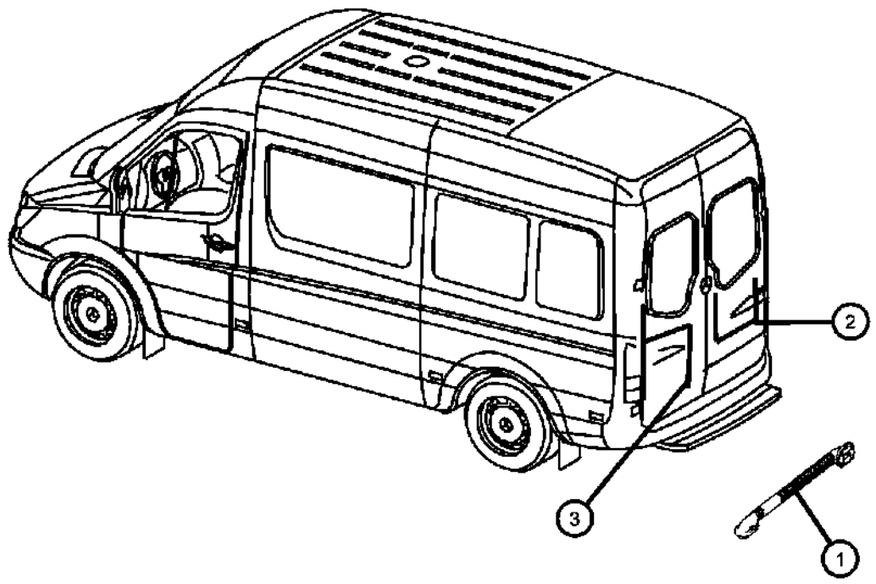

ITEM	PART NUMBER	QTY	LINE	SERIES	BODY	ENGINE	TRANS	TRIM	DESCRIPTION
1	68015890AA	1	2, 3, 6, 7	L	13, 15, 17, 53, 55	EG2, EXM	DGZ		COVER
2	68013443AA	1	2, 3, 6, 7	L	13, 15, 17, 53, 55	EG2, EXM	DGZ		WIRING, Body
3	68013442AA	1	2, 3, 6, 7	L	13, 15, 17, 53, 55	EG2, EXM	DGZ		WIRING, Body

SPRINTER (VB)

SERIES	LINE	BODY	ENGINE	TRANSMISSION
L = LOWLINE	3 = HD DODGE 2WD 2 = Med. Duty DODGE 2WD	03 = CAB CHASSIS WHEEL BASE 3 05 = CAB CHASSIS WHEEL BASE 5 13 = 119 WB 53 = 119 WB 15 = VAN WHEEL BASE 5 55 = WAGON WHEEL BASE 5 17 = VAN WHEEL BASE 7	EG2 = 3.5L V6 Gas Engine EXM = 3.0L V6 Turbo Diesel Engine	DGZ = 5-Speed Auto W5A380 Transmission

Cable Cover & Ducts
Figure 8-1530

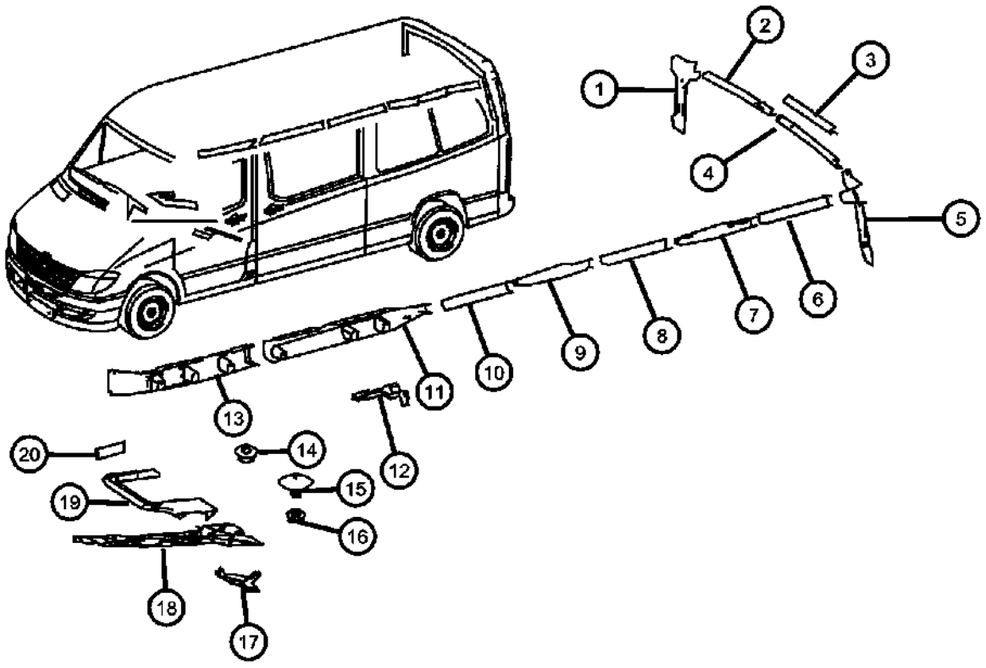

ITEM	PART NUMBER	QTY	LINE	SERIES	BODY	ENGINE	TRANS	TRIM	DESCRIPTION
1	68014262AA	1	2, 3, 6, 7	L	13, 15, 17	EG2, EXM	DGZ		SHIELD, Wiring
2	68014265AA	1	6, 7, 2, 3	L	13, 15, 17	EG2, EXM	DGZ		SHIELD, Wiring
3	68014266AA	1	2, 3, 6, 7	L	13, 15, 17	EG2, EXM	DGZ		SHIELD, Wiring
4	68014264AA	1	2, 3, 6, 7	L	13, 15, 17	EG2, EXM	DGZ		SHIELD, Wiring
5	68014260AA	1	2, 3, 6, 7	L	13, 15, 17	EG2, EXM	DGZ		SHIELD, Wiring
6	68005285AA	1	2, 3, 6, 7	L	53	EG2, EXM	DGZ		TUBE
7	68014259AA	1	2, 3, 6, 7	L	13, 15, 17	EG2, EXM	DGZ		SHIELD, Wiring
8	68005283AA	2	2, 3, 6, 7	L	13, 53	EG2, EXM	DGZ		SHIELD, Wiring
9									SHIELD, Wiring
	68005282AA	4	2, 3, 6, 7	L	15, 17, 55	EG2, EXM	DGZ		
		2	2, 3, 6, 7	L	13, 53	EG2, EXM	DGZ		
10	68014248AA	1	2, 3, 6, 7	L	13, 15, 17	EG2, EXM	DGZ		SHIELD, Wiring
11									SHIELD, Wiring
	68014253AA	1	2, 3, 6, 7	L	13, 15, 17	EG2, EXM	DGZ		D03+T19
	68014256AA	1	2, 3, 6, 7	L	13, 53	EG2, EXM	DGZ		T19
12	68016704AA	1	2, 3, 6, 7	L	13, 15, 17, 53, 55	EG2, EXM	DGZ		SHIELD, Wiring
13									SHIELD, Wiring
	68014250AA	1	7, 2, 3, 6	L	13, 53	EG2, EXM	DGZ		T19
	68014251AA	1	2, 3, 6, 7	L	13, 15, 17	EG2, EXM	DGZ		D03+T19
14									NUT
	68004878AA	1	3, 7	L	03, 05	EG2, EXM	DGZ		Mounting Cover M6
		2	2, 3, 6, 7	L	13, 15, 17, 53, 55	EG2, EXM	DGZ		Mounting Cover M6
15	68014252AA	3	2, 3, 6, 7	L	13, 15, 17, 53, 55	EG2, EXM	DGZ		RETAINER, Cable Duct Fastening
16	68014257AA	1	2, 3, 6, 7	L	13, 15, 17, 53, 55	EG2, EXM	DGZ		WASHER
17	68014257AA	1							WASHER, (NOT SERVICED)
18	68016711AA	1	2, 3, 6, 7	L		EG2, EXM	DGZ		SHIELD, Wiring
19	68015889AA	1	2, 3, 6, 7	L	05, 13, 15, 17	EG2, EXM	DGZ		SHIELD, Wiring, Floor Channel Extension
20	05135206AA	200	2, 3, 6, 7	L	13, 15, 17, 53, 55	EG2, EXM	DGZ		WEATHERSTRIP, Cable Duct

SPRINTER (VB)

SERIES	LINE	BODY	ENGINE	TRANSMISSION
L = LOWLINE	3 = HD DODGE 2WD 2 = Med. Duty DODGE 2WD	03 = CAB CHASSIS WHEEL BASE 3 05 = CAB CHASSIS WHEEL BASE 5 13 = 119 WB 53 = 119 WB 15 = VAN WHEEL BASE 5 55 = WAGON WHEEL BASE 5 17 = VAN WHEEL BASE 7	EG2 = 3.5L V6 Gas Engine EXM = 3.0L V6 Turbo Diesel Engine	DGZ = 5-Speed Auto W5A380 Transmission

Anti-Theft Alarm System
Figure 8-1535

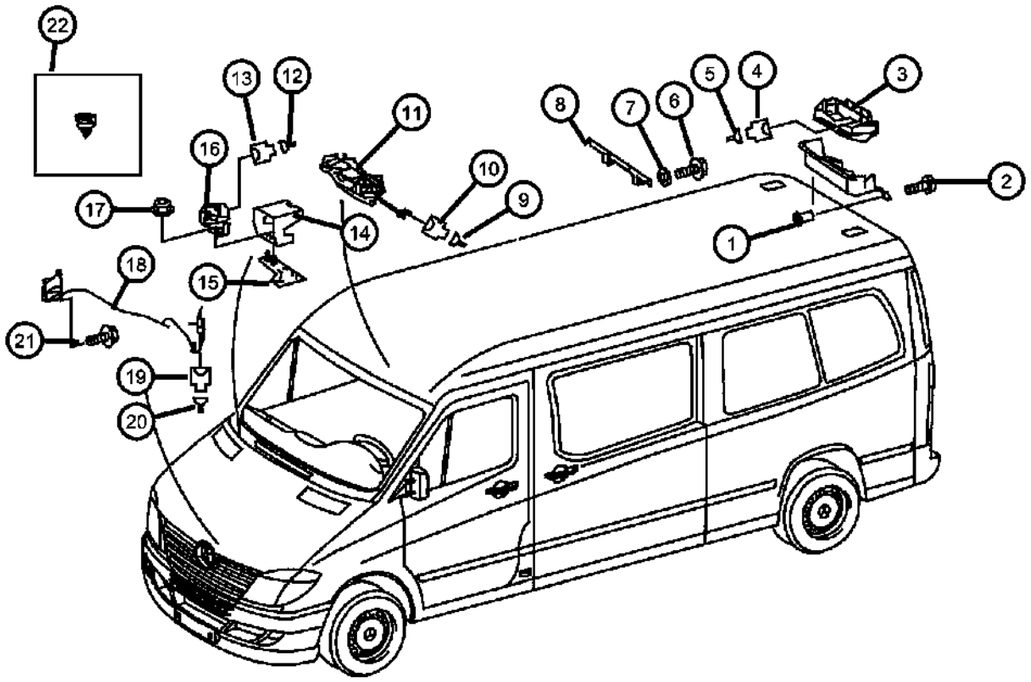

ITEM	PART NUMBER	QTY	LINE	SERIES	BODY	ENGINE	TRANS	TRIM	DESCRIPTION
1									RIVET, NONE, SPRINTER
	05174643AA	2	2, 3, 6, 7	L	13, 15, 17, 53, 55	EG2, EXM	DGZ		Bracket Mounting
		2	2, 3, 6, 7	L	53, 55	EG2, EXM	DGZ		Bracket Mounting
2	68013429AA	1	2, 3, 6, 7	L		EG2, EXM	DGZ		BRACKET
3	0ZF50RC3AA	2	2, 3, 6, 7	L	13, 15, 17, 53, 55	EG2, EXM	DGZ		SWITCH, Loading Compartment
4	05120636AA	1	2, 3, 6, 7	L		EG2, EXM	DGZ		CONNECTOR, Interior Motion Sensor 4-PINB44/2
5	68016730AA	AR	2, 3, 6, 7	L		EXM, EG2	DGZ		TERMINAL
6	68010354AA	2	2, 3, 6, 7	L	13, 15, 17, 53, 55	EG2, EXM	DGZ		SCREW, Bracket Mounting M5x16
7	05104639AA	2	2, 3, 6, 7	L	13, 15, 17, 53, 55	EG2, EXM	DGZ		WASHER, Bracket Mounting
8	68013428AA	1	2, 3, 6, 7	L		EG2, EXM	DGZ		BRACKET, Sensor,Front
9	68016730AA	AR	2, 3, 6, 7	L		EG2, EXM	DGZ		TERMINAL
10	05120636AA	1	2, 3, 6, 7	L		EG2, EXM	DGZ		CONNECTOR, Interior Motion Sensor
11	68017615AA	1	2, 3, 6, 7	L		EG2, EXM	DGZ		SENSOR, Interior Sensor
12	68016719AA	AR	2, 3, 6, 7	L		EG2, EXM	DGZ		TERMINAL, H3/1
13	68011397AA	1	2, 3, 6, 7	L		EG2, EXM	DGZ		CONNECTOR, Wiring, Alarm Horn H3/1
14	68029376AA	1	2, 3, 6, 7	L		EG2, EXM	DGZ		COVER, Anti-Theft Alarm System
15	68004682AA	1	2, 3, 6, 7	L		EG2, EXM	DGZ		BRACKET
16	68013410AA	1	2, 3, 6, 7	L		EG2, EXM	DGZ		SIREN, Alarm
17									NUT
	68004878AA	3	2, 3, 6, 7	L	13, 15, 17, 53, 55	EG2, EXM	DGZ		Alarm Siren to A-Pillar
		3	3, 7	L	03, 05	EG2, EXM	DGZ		Alarm Siren to A-Pillar
18	68013411AA	1	2, 3, 6, 7	L		EG2, EXM	DGZ		SWITCH, Security Alarm
19	05120277AA	1	2, 3, 6, 7	L		EG2, EXM	DGZ		CONNECTOR, Wiring Repair
20	68016719AA	AR	2, 3, 6, 7	L		EG2, EXM	DGZ		TERMINAL
21	06104634AA	2	2, 3, 6, 7	L		EG2, EXM	DGZ		SCREW, Console
22	68013413AA	1	2, 3, 6, 7	L	13, 15, 17, 53, 55	EG2, EXM	DGZ		CLIP, Retainer

SPRINTER (VB)

SERIES	LINE	BODY	ENGINE	TRANSMISSION
L = LOWLINE	3 = HD DODGE 2WD 2 = Med. Duty DODGE 2WD	03 = CAB CHASSIS WHEEL BASE 3 05 = CAB CHASSIS WHEEL BASE 5 13 = 119 WB 53 = 119 WB 15 = VAN WHEEL BASE 5 55 = WAGON WHEEL BASE 5 17 = VAN WHEEL BASE 7	EG2 = 3.5L V6 Gas Engine EXM = 3.0L V6 Turbo Diesel Engine	DGZ = 5-Speed Auto W5A380 Transmission

AR = use ase required - = Non illustrrated part

<< RETURN TO GROUP INDEX

Cooling Module Harness
Figure 8-1540

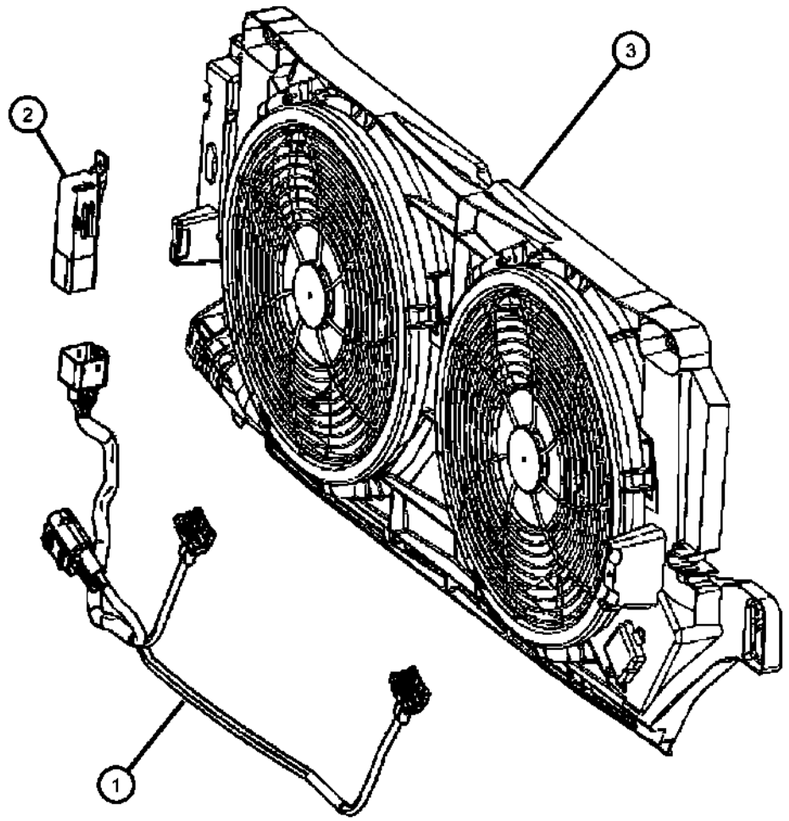

ITEM	PART NUMBER	QTY	LINE	SERIES	BODY	ENGINE	TRANS	TRIM	DESCRIPTION
1									WIRING
	68013668AA	1	2, 3, 6, 7	L	13, 15, 17	EG2, EXM	DGZ		Single Auxilary Fan
	68013673AA	1	2, 3, 6, 7	L	13, 15, 17, 53, 55	EG2, EXM	DGZ		Dual Auxilary Fan
2									RELAY
	68013669AA	1	2, 3, 6, 7	L	13, 15, 17	EG2, EXM	DGZ		With [HAB+(CWC%XJW%XJ1%XJY)]
	68013674AA	1	2, 3, 6, 7	L	13, 15, 17, 53, 55	EG2, EXM	DGZ		With [HAB]
3	68013674AA	1							MODULE, Cooling, (NOT SERVICED),

SPRINTER (VB)

SERIES	LINE	BODY	ENGINE	TRANSMISSION
L = LOWLINE	3 = HD DODGE 2WD 2 = Med. Duty DODGE 2WD	03 = CAB CHASSIS WHEEL BASE 3 05 = CAB CHASSIS WHEEL BASE 5 13 = 119 WB 53 = 119 WB 15 = VAN WHEEL BASE 5 55 = WAGON WHEEL BASE 5 17 = VAN WHEEL BASE 7	EG2 = 3.5L V6 Gas Engine EXM = 3.0L V6 Turbo Diesel Engine	DGZ = 5-Speed Auto W5A380 Transmission

Wiring Harness - Roof
Figure 8-1545

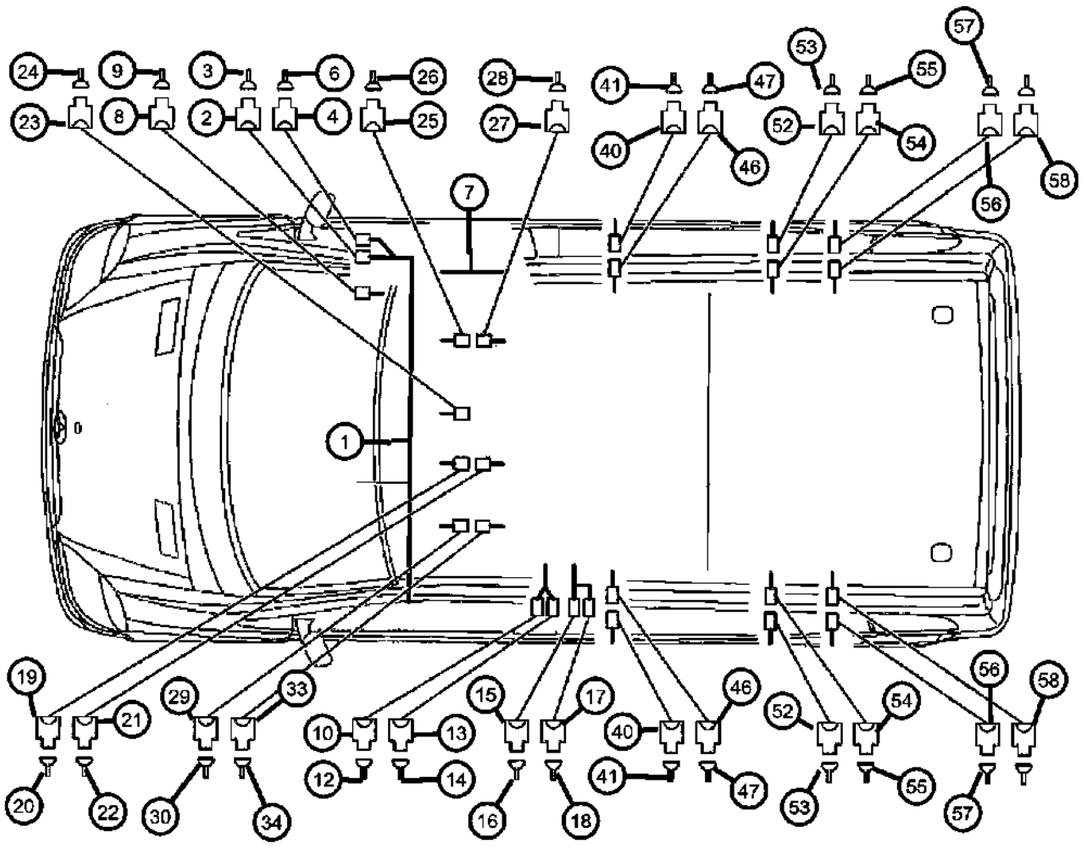

ITEM	PART NUMBER	QTY	LINE	SERIES	BODY	ENGINE	TRANS	TRIM	DESCRIPTION
1	68013434AA	1	2, 3, 6, 7	L		EG2, EXM	DGZ		WIRING, Body, Roof Harness
2									CONNECTOR, Wiring
	68011368AA	1	2, 3, 6, 7	L	53, 55, 03, 05	EG2, EXM	DGZ		Connector Cockpit Roof [6 Pin; X18/23]
		1	2, 3, 6, 7	L	13, 15, 17	EG2, EXM	DGZ		Connector Cockpit Roof [6 Pin; X18/23]
3	68013258AA	AR	2, 3, 6, 7	L		EG2, EXM	DGZ		TERMINAL, [1.0 - 2.5 MM2; X18/23]
4	68011342AA	1	2, 3, 6, 7	L		EG2, EXM	DGZ		CONNECTOR, [28 Pin; X15/51]
-5	68016717AA	1	2, 3, 6, 7	L		EG2, EXM	DGZ		COVER, Cover For Callout [#4]
6	05133990AA	3	2, 3, 6, 7	L	13, 15, 17, 53, 55	EG2, EXM	DGZ		TERMINAL, Male, [0.75 MM2;X18/51]
7	05174404AA	3	3, 7	L	03, 05	EG2, EXM	DGZ		WIRING, Roof Lamps
8	05120734AA	1	2, 3, 6, 7	L		EG2, EXM	DGZ		TERMINAL, Male, [1.0 -2.5 MM2; X85/22]
9	05103751AA	1	2, 3, 6, 7	L	13, 15, 17, 53, 55	EG2, EXM	DGZ		CONNECTOR, [X85/22]
10	68011342AA	1	2, 3, 6, 7	L		EXM, EG2	DGZ		CONNECTOR, [28 Pin; X18/52]
-11	68016717AA	1	2, 3, 6, 7	L		EG2, EXM	DGZ		COVER, Cover For Callout [#10]
12	05133990AA	3	2, 3, 6, 7	L	13, 15, 17, 53, 55	EG2, EXM	DGZ		TERMINAL, Male, [0.75 MM2;X18/52]
13	05138024AA	1	2, 3, 6, 7	L		EG2, EXM	DGZ		CONNECTOR
14									TERMINAL
	68013257AA	AR	2, 3, 6, 7	L		EG2, EXM	DGZ		[0.5 - 1.0 MM2; X18/53]
	68013258AA	AR	2, 3, 6, 7	L		EG2, EXM	DGZ		[1.0 - 2.5 MM2; X18/53]
	68016714AA	1	2, 3, 6, 7	L		EG2, EXM	DGZ		[4.0 MM2; X18/53]
15	68011379AA	1	2, 3, 6, 7	L		EG2, EXM	DGZ		CONNECTOR, Roof Air [1 Pin; X53/8]
16	68016741AA	AR	2, 3, 6, 7	L		EG2, EXM	DGZ		TERMINAL, [X53/8]
17	68011379AA	1	2, 3, 6, 7	L		EG2, EXM	DGZ		CONNECTOR, Roof Air [1Pin; X53/9]
18	68016741AA	AR	2, 3, 6, 7	L		EG2, EXM	DGZ		TERMINAL, [X53/9]
19	68011229AA	1	2, 3, 6, 7	L		EG2, EXM	DGZ		CONNECTOR, Connector, Backup Camera; [6Pin; X169]
20	05103873AA	3	2, 3, 6, 7	L	13, 15, 17, 53, 55	EG2, EXM	DGZ		TERMINAL, [0.75 MM2;MQS; X169]
21									CONNECTOR
	68011344AA	1	2, 3, 6, 7	L	13, 15, 17	EG2, EXM	DGZ		Connector, Backup Camera [6 Pin; X169]

SPRINTER (VB)

SERIES	LINE	BODY	ENGINE	TRANSMISSION
L = LOWLINE	3 = HD DODGE 2WD 2 = Med. Duty DODGE 2WD	03 = CAB CHASSIS WHEEL BASE 3 05 = CAB CHASSIS WHEEL BASE 5 13 = 119 WB 53 = 119 WB 15 = VAN WHEEL BASE 5 55 = WAGON WHEEL BASE 5 17 = VAN WHEEL BASE 7	EG2 = 3.5L V6 Gas Engine EXM = 3.0L V6 Turbo Diesel Engine	DGZ = 5-Speed Auto W5A380 Transmission

Wiring Harness - Roof
Figure 8-1545

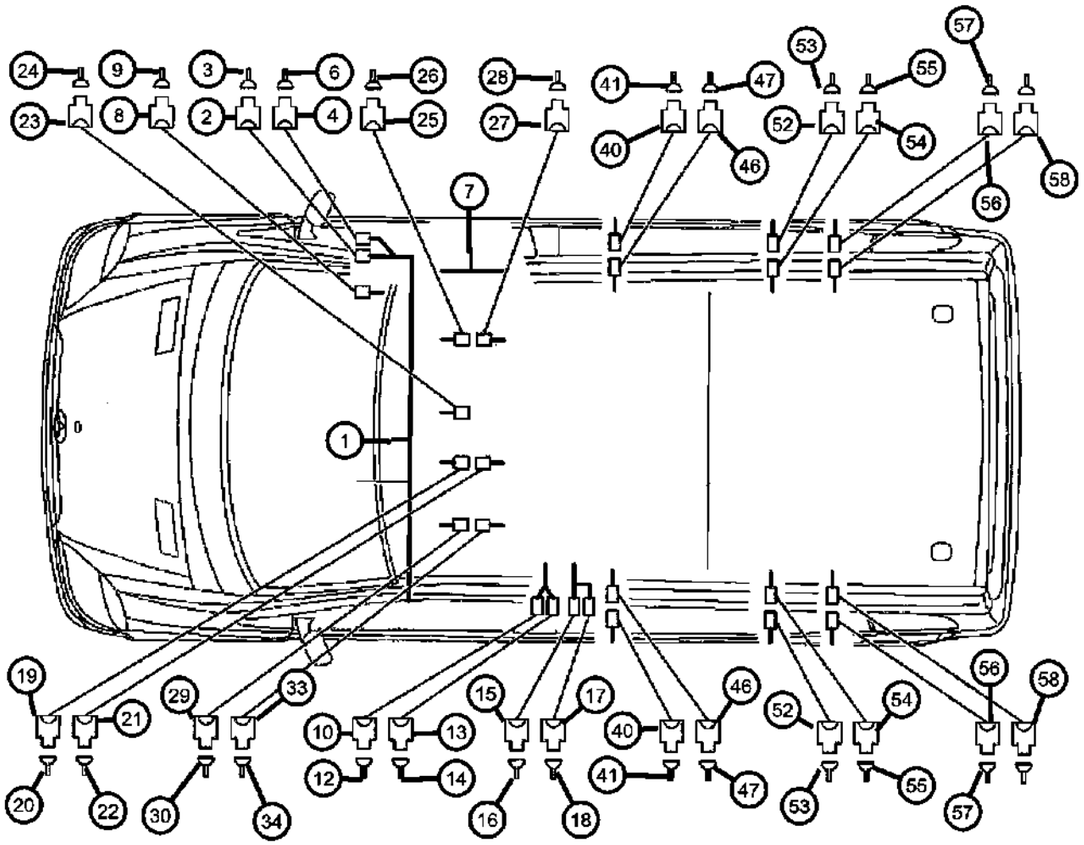

ITEM	PART NUMBER	QTY	LINE	SERIES	BODY	ENGINE	TRANS	TRIM	DESCRIPTION
		1	2, 3, 6, 7	L	53, 55	EG2, EXM	DGZ		Connector, Backup Camera [6 Pin; X169]
22	05133990AA	3	2, 3, 6, 7	L	13, 15, 17, 53, 55	EG2, EXM	DGZ		TERMINAL, Male, [0.75 MM2; X169]
23	68011231AA	1	2, 3, 6, 7	L		EG2, EXM	DGZ		CONNECTOR, Connector, Roof Din-Slot; [4 Pin; X178]
24	05103873AA	3	2, 3, 6, 7	L	13, 15, 17, 53, 55	EG2, EXM	DGZ		TERMINAL, [0.75 MM2 MQS; X178]
25	05120728AA	2	2, 3, 6, 7	L		EG2, EXM	DGZ		CONNECTOR, Roof [EDW/MRA; 2 Pin; X42/28]
26	05103873AA	3	2, 3, 6, 7	L	13, 15, 17, 53, 55	EG2, EXM	DGZ		TERMINAL, [0.75 MM2 MQS; X42/28]
27	68011374AA	1	2, 3, 6, 7	L		EG2, EXM	DGZ		CONNECTOR, [2 Pin; X42/28]
28	05133990AA	3	2, 3, 6, 7	L	13, 15, 17, 53, 55	EG2, EXM	DGZ		TERMINAL, Male, [0.75 MM2; X42/28]
29	68011288AA	1	2, 3, 6, 7	L		EG2, EXM	DGZ		CONNECTOR
30	05103663AA	AR	2, 3, 6, 7	L		EG2	DGZ		GROMMET, [0.25 - 1.0 MM2; X64/14]
-31	05120865AA	1	2, 3, 6, 7	L		EG2, EXM	DGZ		GASKET, Dummy Plug [X64/14]
-32	68016724AA	AR	2, 3, 6, 7	L		EG2, EXM	DGZ		TERMINAL, [X64/14]
33	68011365AA	1	2, 3, 6, 7	L		EG2, EXM	DGZ		CONNECTOR, Wiring
34	68011882AA	AR	2, 3, 6, 7	L		EG2	DGZ		TERMINAL, [0.75 - 1.0mm2; x64/14]
-35	05103663AA	AR	2, 3, 6, 7	L		EG2	DGZ		GROMMET, [0.25 - 1.0mm2; x64/14]
-36	05120865AA	1	2, 3, 6, 7	L		EG2, EXM	DGZ		GASKET, [Dummy] Plug [X64/14]
-37	68016724AA	AR	2, 3, 6, 7	L		EG2, EXM	DGZ		TERMINAL, [X64/14]
-38	68011056AA	1	2, 3, 6, 7	L		EG2, EXM	DGZ		GASKET
-39	68011057AA	1	2, 3, 6, 7	L		EG2, EXM	DGZ		GASKET
40	05120751AA	1	2, 3, 6, 7	L		EG2, EXM	DGZ		CONNECTOR, Wiring
41	05103880AA	AR	2, 3, 6, 7	L		EG2, EXM	DGZ		TERMINAL, [0.5 -1.0 MM2 JPT; X174/1; X174/2]
-42	05103661AA	1	2, 3, 6, 7	L		EG2, EXM	DGZ		GASKET, [0.5 - 1.0 MM; X174/1; X174/2]
-43	05120858AA	2	2, 3, 6, 7	L		EG2, EXM	DGZ		GASKET, [Dummy] Plug [X174/1; X174/2]
-44	05133370AA	2	2, 3, 6, 7	L		EG2, EXM	DGZ		TERMINAL, Contact Spring [1.5 - 2.5 MM2 JPT; X174/1; X174/2]
-45	05120833AA	2	2, 3, 6, 7	L		EG2, EXM	DGZ		GASKET, [1.0 - 2.5MM; X174/1; X174/2]

SPRINTER (VB)

SERIES	LINE	BODY	ENGINE	TRANSMISSION
L = LOWLINE	3 = HD DODGE 2WD 2 = Med. Duty DODGE 2WD	03 = CAB CHASSIS WHEEL BASE 3 05 = CAB CHASSIS WHEEL BASE 5 13 = 119 WB 53 = 119 WB 15 = VAN WHEEL BASE 5 55 = WAGON WHEEL BASE 5 17 = VAN WHEEL BASE 7	EG2 = 3.5L V6 Gas Engine EXM = 3.0L V6 Turbo Diesel Engine	DGZ = 5-Speed Auto W5A380 Transmission

Wiring Harness - Roof
Figure 8-1545

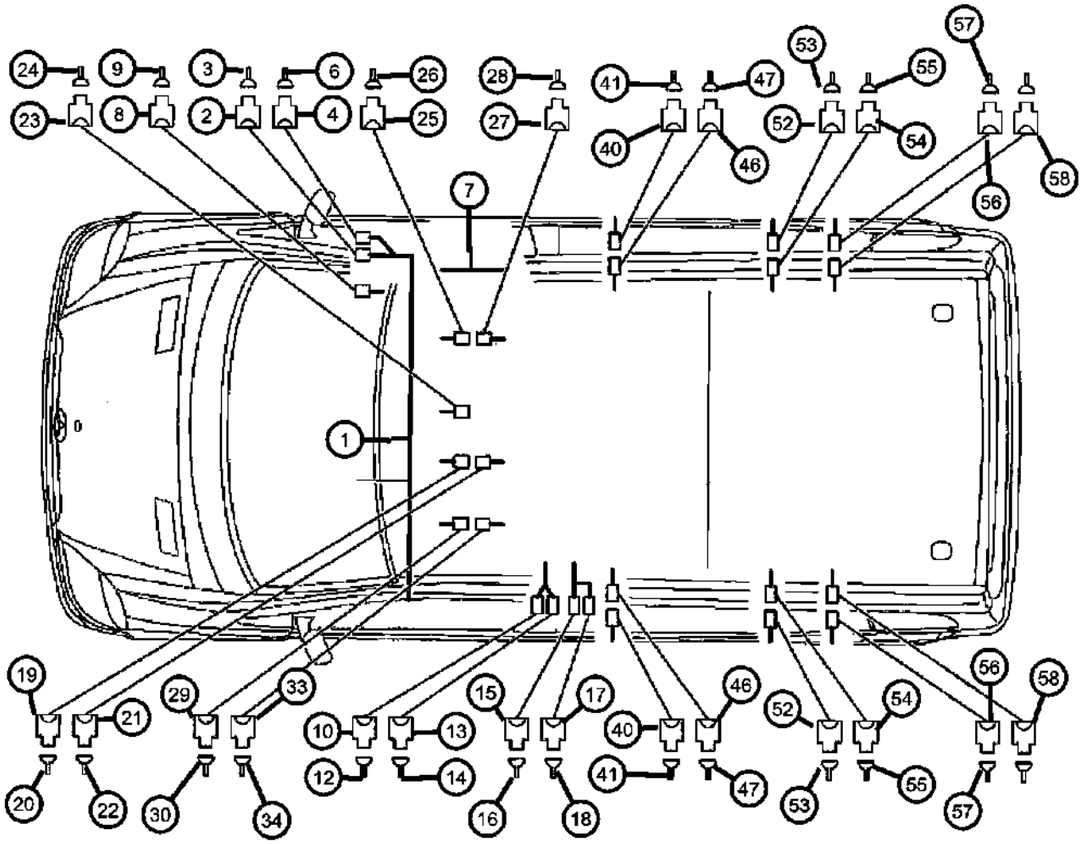

ITEM	PART NUMBER	QTY	LINE	SERIES	BODY	ENGINE	TRANS	TRIM	DESCRIPTION
46	68011336AA	1	2, 3, 6, 7	L		EG2, EXM	DGZ		CONNECTOR
47	68016743AA	1	2, 3, 6, 7	L		EG2, EXM	DGZ		TERMINAL, Flat Plug [X174/1; X174/2]
-48	05103663AA	AR	2, 3, 6, 7	L		EG2	DGZ		GROMMET, [0.25 - 1.0 MM2; X174/1; X174/2]
-49	05120865AA	1	2, 3, 6, 7	L		EG2, EXM	DGZ		GASKET, [Dummy] Plug [X174/1; X174/2]
-50	68011883AA	AR	2, 3, 6, 7	L		EG2	DGZ		TERMINAL, Flat Plug [1.5 - 2.5 MM2; X174/1; X174/2]
-51	05120864AA	99	2, 3, 6, 7	L		EG2	DGZ		GROMMET, Grommet [1.01 - 2.5 MM2; X174/1; X174/2]
52									CONNECTOR
	05120717AA	1	2, 3, 6, 7	L	13, 15, 17, 53, 55	EG2, EXM	DGZ		Connector Central Locking Motor [3 Pin;X43/11; X43/2], Right & Left, Rear Door
		1	3, 7	L	03, 05	EG2, EXM	DGZ		Connector Central Locking Motor [3 Pin;X43/11; X43/2], Right & Left, Rear Door
53	05103873AA	AR	2, 3, 6, 7	L		EG2, EXM	DGZ		TERMINAL, [0.75 MM2 MQS; X43/11; X43/12]
54	05183532AA	1	2, 3, 6, 7	L	13, 15, 17, 53, 55	EG2, EXM	DGZ		CONNECTOR, Central Locking Motor [3 Pin X43/11; X43/12], Right & Left, Rear Door
55	05133990AA	3	2, 3, 6, 7	L	13, 15, 17, 53, 55	EG2, EXM	DGZ		TERMINAL, Male, [0.75 MM2; X43/11; X43/12]
56									CONNECTOR, 68011247AA
	68011231AA	1	2, 3, 6, 7	L		EG2, EXM	DGZ		[4 Pin; X8/20], Right, Rear
	68011253AA	1	2, 3, 6, 7	L		EG2, EXM	DGZ		[4 Pin; X8/23], Left, Rear
	68011254AA	1	2, 3, 6, 7	L	13, 15, 17	EG2, EXM	DGZ		[6 Pin; X8/21], Right, Rear
		1	2, 3, 6, 7	L	03, 05, 53, 55	EG2, EXM	DGZ		[6 Pin; X8/21], Right, Rear
57									TERMINAL
	05103873AA	AR	2, 3, 6, 7	L		EG2, EXM	DGZ		[0.75 MM2 MQS; X8/20]
	05133945AA	AR	2, 3, 6, 7	L	13, 15, 17, 53, 55	EG2, EXM	DGZ		Contact Spring [0.5 - 1.0 MM2 SLK; X8/22; X8/21]
	68016713AA	AR	2, 3, 6, 7	L		EXM, EG2	DGZ		[2.5 - 4.0 MM2 SLK; X8/21; X8/23]
58									CONNECTOR
	68011357AA	1	2, 3, 6, 7	L		EG2, EXM	DGZ		[4 Pin; X8/22], Left, Rear Door
	68011360AA	1	2, 3, 6, 7	L		EG2, EXM	DGZ		[4 Pin; X8/20], Right, Rear Door

SPRINTER (VB)

SERIES	LINE	BODY	ENGINE	TRANSMISSION
L = LOWLINE	3 = HD DODGE 2WD 2 = Med. Duty DODGE 2WD	03 = CAB CHASSIS WHEEL BASE 3 05 = CAB CHASSIS WHEEL BASE 5 13 = 119 WB 53 = 119 WB 15 = VAN WHEEL BASE 5 55 = WAGON WHEEL BASE 5 17 = VAN WHEEL BASE 7	EG2 = 3.5L V6 Gas Engine EXM = 3.0L V6 Turbo Diesel Engine	DGZ = 5-Speed Auto W5A380 Transmission

Wiring Harness - Roof
Figure 8-1545

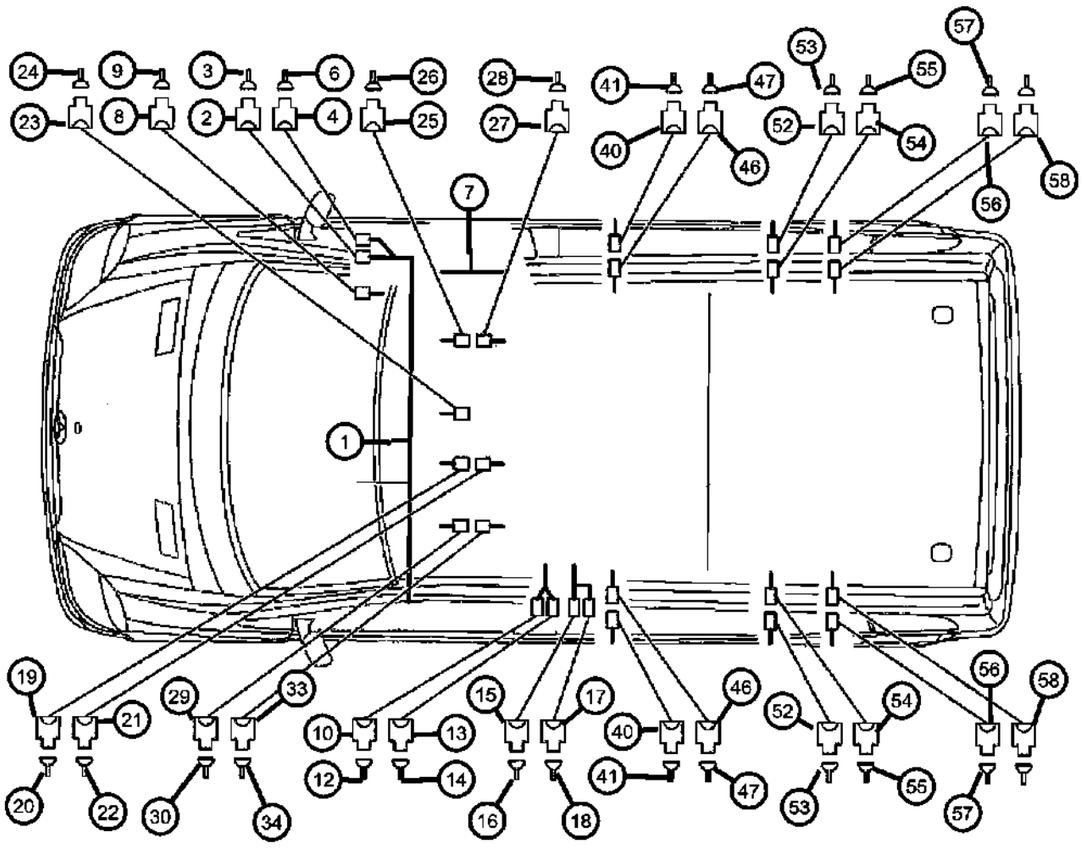

ITEM	PART NUMBER	QTY	LINE	SERIES	BODY	ENGINE	TRANS	TRIM	DESCRIPTION
	68011362AA	1	2, 3, 6, 7	L		EG2, EXM	DGZ		[4 Pin; X8/23], Left, Rear Door
-59									CONNECTOR, Wiring
	68011368AA	1	2, 3, 6, 7	L	03, 05, 53, 55	EG2, EXM	DGZ		[6 Pin; X8/21], Right, Rear Door
		1	2, 3, 6, 7	L	13, 15, 17	EG2, EXM	DGZ		[6 Pin; X8/21], Right, Rear Door
-60	05133990AA	3	2, 3, 6, 7	L	13, 15, 17, 53, 55	EG2, EXM	DGZ		TERMINAL, Male, [0.75 MM2; X8/20]
-61									TERMINAL
	68013257AA	AR	2, 3, 6, 7	L		EG2, EXM	DGZ		[0.5 - 1.0 MM2; X8/21]
	68013258AA	AR	2, 3, 6, 7	L		EG2, EXM	DGZ		[1.0 -2.5 MM2; X8/21; X8/23]

SPRINTER (VB)

SERIES	LINE	BODY	ENGINE	TRANSMISSION
L = LOWLINE	3 = HD DODGE 2WD 2 = Med. Duty DODGE 2WD	03 = CAB CHASSIS WHEEL BASE 3 05 = CAB CHASSIS WHEEL BASE 5 13 = 119 WB 53 = 119 WB 15 = VAN WHEEL BASE 5 55 = WAGON WHEEL BASE 5 17 = VAN WHEEL BASE 7	EG2 = 3.5L V6 Gas Engine EXM = 3.0L V6 Turbo Diesel Engine	DGZ = 5-Speed Auto W5A380 Transmission

Sliding Door Wiring Harness
Figure 8-1550

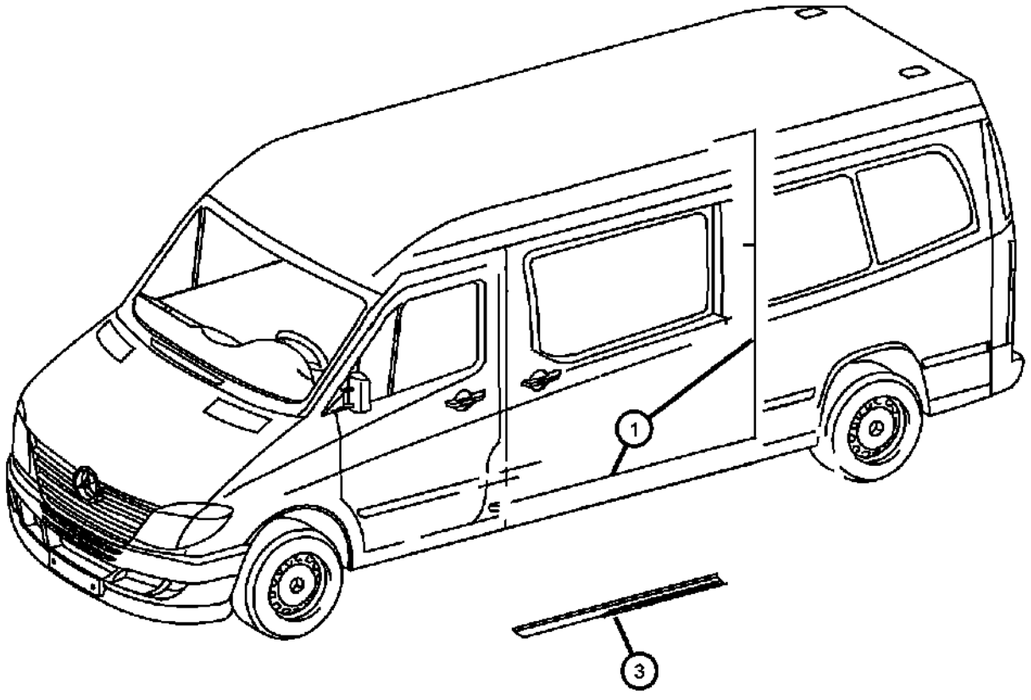

ITEM	PART NUMBER	QTY	LINE	SERIES	BODY	ENGINE	TRANS	TRIM	DESCRIPTION
1	68013440AA	1	2, 3, 6, 7	L	13, 15, 17	EG2, EXM	DGZ		WIRING, Sliding Door Left
-2	68013441AA	1	2, 3, 6, 7	L	13, 15, 17, 53, 55	EG2, EXM	DGZ		WIRING, Sliding Door Right
3									SHIELD, Wiring
	68010314AA	1	2, 3, 6, 7	L	13, 15, 17, 53, 55	EG2, EXM	DGZ		With [CWC] OR With [CWC + XJW] Or With [CWC + XJ1] OR With [CWC + GEX], Right
	68010315AA	1	2, 3, 6, 7	L	13, 15, 17, 53, 55	EG2, EXM	DGZ		, Right

SPRINTER (VB)

SERIES	LINE	BODY	ENGINE	TRANSMISSION
L = LOWLINE	3 = HD DODGE 2WD 2 = Med. Duty DODGE 2WD	03 = CAB CHASSIS WHEEL BASE 3 05 = CAB CHASSIS WHEEL BASE 5 13 = 119 WB 53 = 119 WB 15 = VAN WHEEL BASE 5 55 = WAGON WHEEL BASE 5 17 = VAN WHEEL BASE 7	EG2 = 3.5L V6 Gas Engine EXM = 3.0L V6 Turbo Diesel Engine	DGZ = 5-Speed Auto W5A380 Transmission

Wiring Harness Tie Straps & Related Parts
Figure 8-1610

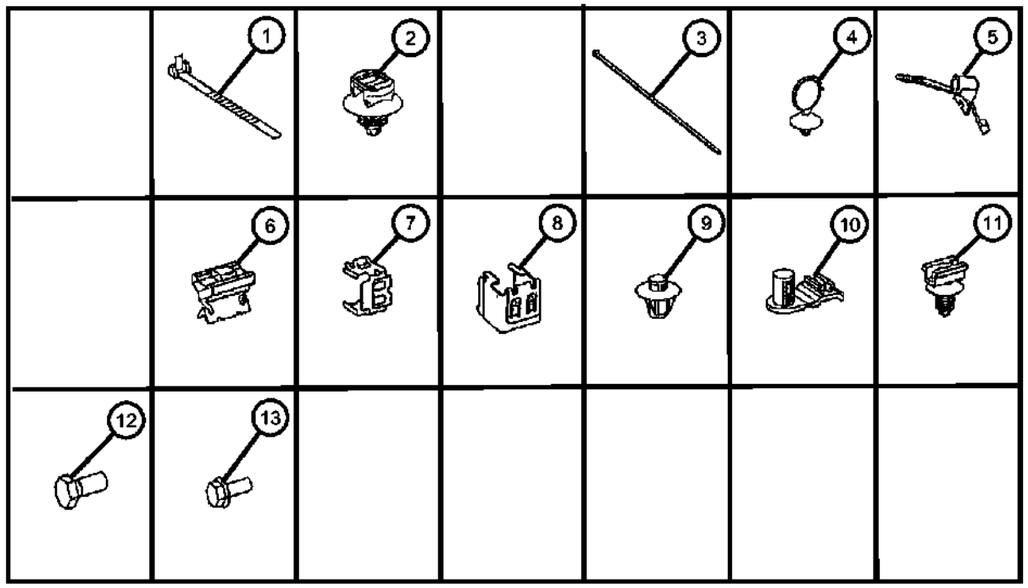

ITEM	PART NUMBER	QTY	LINE	SERIES	BODY	ENGINE	TRANS	TRIM	DESCRIPTION
1									TIE STRAP
	06104758AA	99	3, 7	L	03, 05	EG2, EXM	DGZ		[2.8x100 MM]
		99	2, 3, 6, 7	L	13, 15, 17, 53, 55	EG2, EXM	DGZ		[2.8x100 MM]
2	06104770AA	2	2, 3, 6, 7	L		EG2, EXM	DGZ		STRAP, [260x3.3 MM]
3	06104762AA	1	2, 3, 6, 7	L		EG2	DGZ		STRAP, Tie, [4.8x300 MM]
4									TIE STRAP, Push In
	05126078AA	99	3, 7	L	03, 05	EG2, EXM	DGZ		[4.6x190 MM]
		99	2, 3, 6, 7	L	13, 15, 17, 53, 55	EG2, EXM	DGZ		[4.6x190 MM]
5	06104771AA	99	2, 3, 6, 7	L		EG2, EXM	DGZ		CLIP, Cable, [4.8x151 MM]
6	05159403AA	1	2, 3, 6, 7	L		EG2, EXM	DGZ		BRACKET, [13x18 MM]
7	68012055AA	AR	2, 3, 6, 7	L		EG2, EXM	DGZ		CLAMP
8	68013438AA	99	2, 3, 6, 7	L		EG2, EXM	DGZ		CLIP, Spring
9									FASTENER
	05097059AA	99	3, 7	L	03, 05	EXM, EG2	DGZ		
		99	2, 3, 6, 7	L	13, 15, 17, 53, 55	EG2, EXM	DGZ		
10	68013439AA	99	2, 3, 6, 7	L		EG2, EXM	DGZ		BRACKET
11									CLIP, Retainer
	68013413AA	1	3, 7	L	03, 05	EG2, EXM	DGZ		[6.5 - 7.0 mm]
		1	2, 3, 6, 7	L	13, 15, 17, 53, 55	EG2, EXM	DGZ		[6.5 - 7.0 mm]
12									SCREW, M8x20
	05097692AA	99	3, 7	L	03, 05	EG2, EXM	DGZ		
		99	2, 3, 6, 7	L	13, 15, 17, 53, 55	EG2, EXM	DGZ		
13	05126234AA	99	2, 3, 6, 7	L		EG2, EXM	DGZ		SCREW, [M6X16 MM]

SPRINTER (VB)

SERIES	LINE	BODY	ENGINE	TRANSMISSION
L = LOWLINE	3 = HD DODGE 2WD 2 = Med. Duty DODGE 2WD	03 = CAB CHASSIS WHEEL BASE 3 05 = CAB CHASSIS WHEEL BASE 5 13 = 119 WB 53 = 119 WB 15 = VAN WHEEL BASE 5 55 = WAGON WHEEL BASE 5 17 = VAN WHEEL BASE 7	EG2 = 3.5L V6 Gas Engine EXM = 3.0L V6 Turbo Diesel Engine	DGZ = 5-Speed Auto W5A380 Transmission

AR = use ase required - = Non illustrrated part

<< RETURN TO GROUP INDEX

Drivers Air Bag & Clock Spring
Figure 8-1710

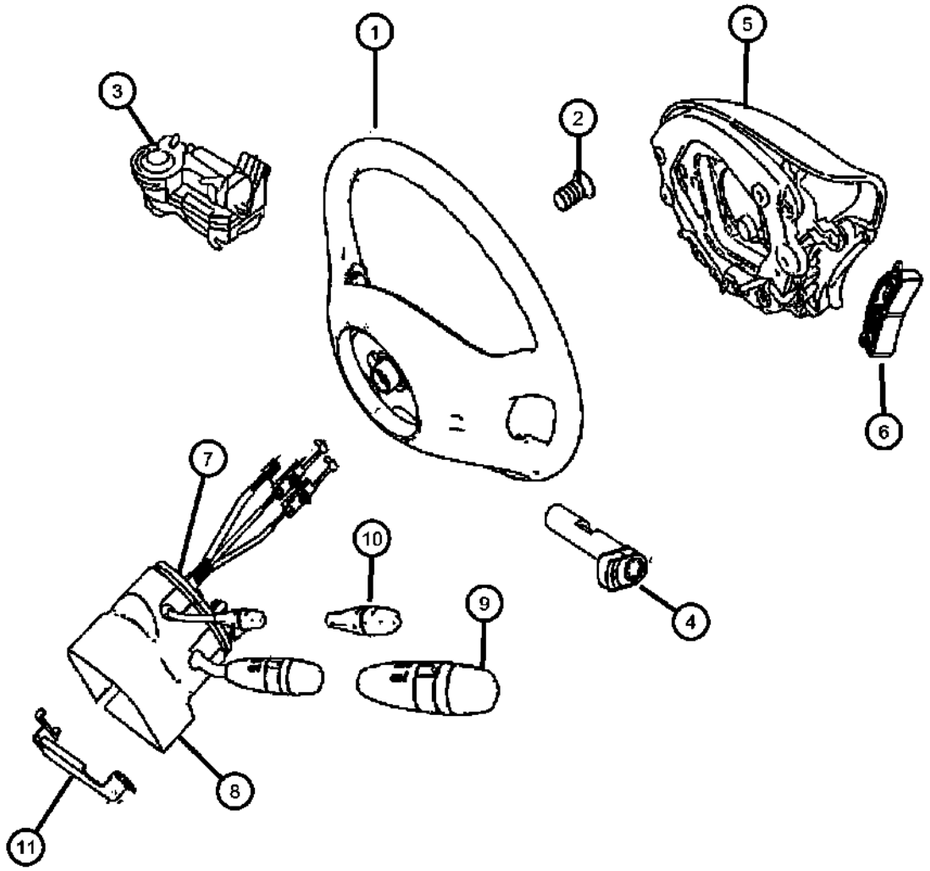

ITEM	PART NUMBER	QTY	LINE	SERIES	BODY	ENGINE	TRANS	TRIM	DESCRIPTION
1	68010421AA	1	2, 3, 6, 7	L		EG2, EXM	DGZ		WHEEL, Steering
2									BOLT, BOLT
	04649132AA	1	3, 7	L	03, 05	EG2, EXM	DGZ		Steering Wheel To Steering Column [M16]
		1	2, 3, 6, 7	L	13, 15, 17, 53, 55	EG2, EXM	DGZ		
3	68010437AA	1	2, 3, 6, 7	L		EG2, EXM	DGZ		MODULE, Steering Control
4	68010438AA	1	2, 3, 6, 7	L		EG2, EXM	DGZ		PIN
5									AIR BAG, Driver
	68010423AA	1	2, 3	L		EXM, EG2	DGZ		With [SCK+MG4]
	68010426AA	1	2, 3	L		EG2, EXM	DGZ		With [MG4]
	68020911AA	1	6, 7	L		EG2, EXM	DGZ		With [SCK+MGQ]
	68020912AA	1	6, 7	L		EG2, EXM	DGZ		With [MGQ]
6	68010427AA	1	2, 3, 6, 7	L		EG2, EXM	DGZ		SWITCH, Steering Wheel, Reconfigurable
7									CLOCKSPRING
	68010451AA	1	2, 3, 6, 7	L		EG2, EXM	DGZ		
	68029347AA	1	2, 3, 6, 7	L		EG2, EXM	DGZ		With [BNB]
8									SHROUD, Steering Column
	68010448AA	1	2, 3, 6, 7	L		EG2, EXM	DGZ		
	68010449AA	1	2, 3, 6, 7	L		EG2, EXM	DGZ		With [NHM]
9	68010446AA	1	2, 3, 6, 7	L		EG2, EXM	DGZ		COVER, Without [NHM]
10	68010447AA	1	2, 3, 6, 7	L		EG2, EXM	DGZ		COVER, Switch, With [NHM]
11	68010457AA	1	2, 3, 6, 7	L		EG2, EXM	DGZ		BRACKET, Steering Column

SPRINTER (VB)

SERIES	LINE	BODY	ENGINE	TRANSMISSION
L = LOWLINE	3 = HD DODGE 2WD 2 = Med. Duty DODGE 2WD	03 = CAB CHASSIS WHEEL BASE 3 05 = CAB CHASSIS WHEEL BASE 5 13 = 119 WB 53 = 119 WB 15 = VAN WHEEL BASE 5 55 = WAGON WHEEL BASE 5 17 = VAN WHEEL BASE 7	EG2 = 3.5L V6 Gas Engine EXM = 3.0L V6 Turbo Diesel Engine	DGZ = 5-Speed Auto W5A380 Transmission

Parktronic System (PTS)
Figure 8-1805

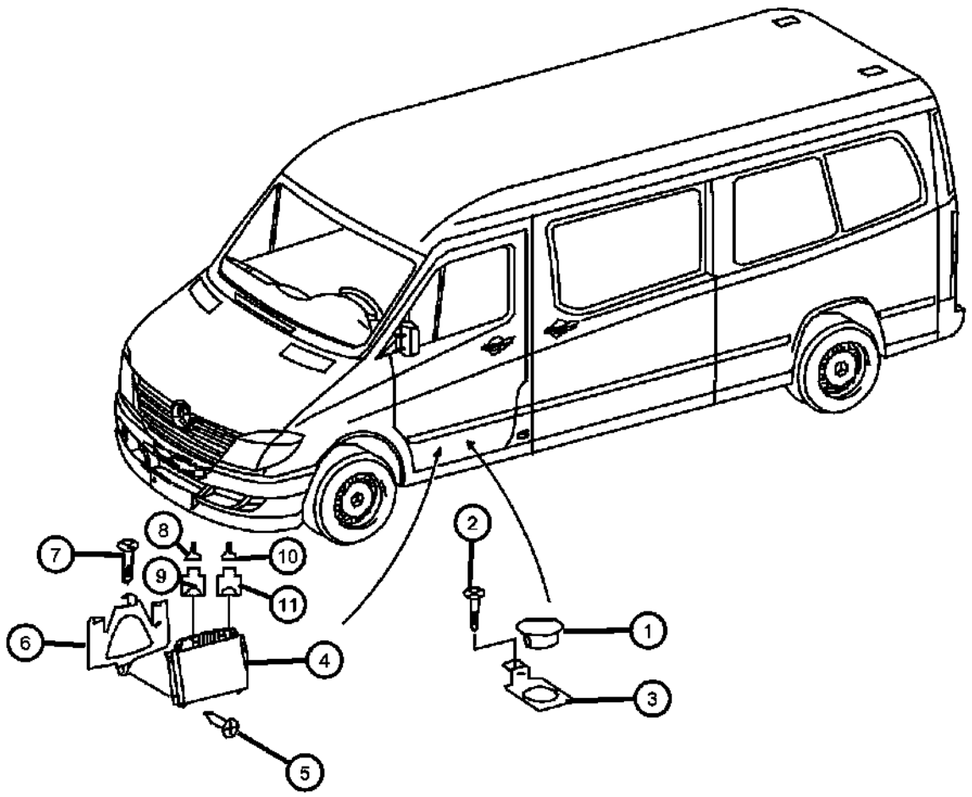

ITEM	PART NUMBER	QTY	LINE	SERIES	BODY	ENGINE	TRANS	TRIM	DESCRIPTION
1	68013409AA	1	2, 3, 6, 7	L	13, 15, 17, 53, 55	EG2, EXM	DGZ		BUZZER, Warning, Park Assist
2	06104566AA	2	2, 3, 6, 7	L	13, 15, 17, 53, 55	EG2, EXM	DGZ		SCREW, Tapping, Bracket Mounting 4.2x13
3	68013392AA	1	2, 3, 6, 7	L	13, 15, 17, 53, 55	EG2, EXM	DGZ		BRACKET, Buzzer
4	68013406AA	1	2, 3, 6, 7	L	13, 15, 17, 53, 55	EG2, EXM	DGZ		MODULE, Parking Assist
5	06104567AA	2	2, 3, 6, 7	L	13, 15, 17, 53, 55	EG2, EXM	DGZ		SCREW, Control Unit to Bracket 4.2x16
6	68013405AA	1	2, 3, 6, 7	L	13, 15, 17, 53, 55	EG2, EXM	DGZ		BRACKET, Control Unit
7	06104566AA	2	2, 3, 6, 7	L	13, 15, 17, 53, 55	EG2, EXM	DGZ		SCREW, Tapping, Bracket Mounting 4.2x13
8	05103882AA	1	2, 3, 6, 7	L					TERMINAL
9	05120838AA	1	2, 3, 6, 7	L		EG2, EXM	DGZ		CONNECTOR
10	05133369AA	AR	2, 3, 6, 7	L		EG2, EXM	DGZ		TERMINAL, Female
11	05120771AA	1	2, 3, 6, 7	L		EG2, EXM	DGZ		CONNECTOR

SPRINTER (VB)

SERIES	LINE	BODY	ENGINE	TRANSMISSION
L = LOWLINE	3 = HD DODGE 2WD 2 = Med. Duty DODGE 2WD	03 = CAB CHASSIS WHEEL BASE 3 05 = CAB CHASSIS WHEEL BASE 5 13 = 119 WB 53 = 119 WB 15 = VAN WHEEL BASE 5 55 = WAGON WHEEL BASE 5 17 = VAN WHEEL BASE 7	EG2 = 3.5L V6 Gas Engine EXM = 3.0L V6 Turbo Diesel Engine	DGZ = 5-Speed Auto W5A380 Transmission

AR = use ase required - = Non illustrrated part

<< RETURN TO GROUP INDEX

Audible Reversing Signal
Figure 8-1810

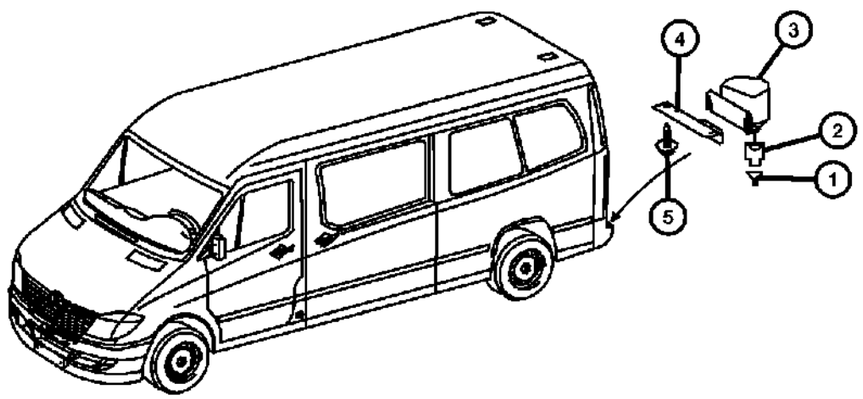

ITEM	PART NUMBER	QTY	LINE	SERIES	BODY	ENGINE	TRANS	TRIM	DESCRIPTION
1	05120860AA	1	2, 3, 6, 7	L		EG2, EXM	DGZ		GASKET
2	05120277AA	1	2, 3, 6, 7	L		EG2, EXM	DGZ		CONNECTOR, Wiring Repair, Backup Warning System 2-PIN;H3/4
3									HORN
	05135946AA	1	3, 7	L	03, 05	EG2, EXM	DGZ		End Crossmember Inner
		1	2, 3, 6, 7	L	13, 15, 17, 53, 55	EG2, EXM	DGZ		End Crossmember Inner
4									BRACKET, Horn
	05135596AA	1	3, 7	L	03, 05	EG2, EXM	DGZ		
		1	2, 3, 6, 7	L	13, 15, 17, 53, 55	EG2, EXM	DGZ		
5	06104565AA	2	2, 3, 6, 7	L		EXM, EG2	DGZ		SCREW, Horn to Bracket 4.2x9.5

SPRINTER (VB)

SERIES	LINE	BODY	ENGINE	TRANSMISSION
L = LOWLINE	3 = HD DODGE 2WD 2 = Med. Duty DODGE 2WD	03 = CAB CHASSIS WHEEL BASE 3 05 = CAB CHASSIS WHEEL BASE 5 13 = 119 WB 53 = 119 WB 15 = VAN WHEEL BASE 5 55 = WAGON WHEEL BASE 5 17 = VAN WHEEL BASE 7	EG2 = 3.5L V6 Gas Engine EXM = 3.0L V6 Turbo Diesel Engine	DGZ = 5-Speed Auto W5A380 Transmission

Ignition System
Figure 8-1905

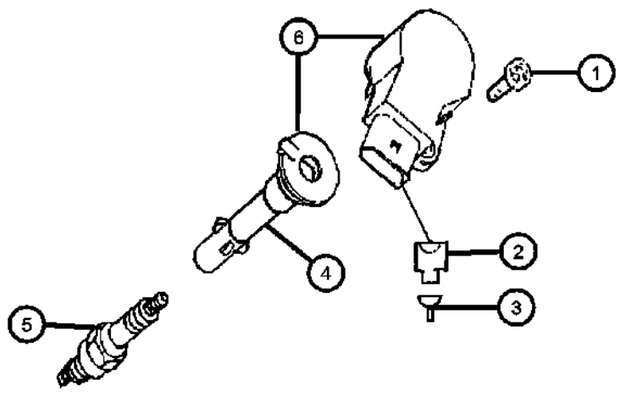

ITEM	PART NUMBER	QTY	LINE	SERIES	BODY	ENGINE	TRANS	TRIM	DESCRIPTION
1	06104143AA	2	2, 3, 6, 7	L		EG2	DGZ		SCREW, M6X1.0X20.0, Ignition Coil on Cylinder Head Cover M6x20
2	68011251AA	1	2, 3, 6, 7	L		EG2	DGZ		CONNECTOR, Ignition Coul 4-PIN
3	05133353AA	AR	2, 3, 6, 7	L		EG2	DGZ		TERMINAL
4	68011847AA	6	2, 3, 6, 7	L		EG2	DGZ		CABLE, Ignition Coil
5	68005667AB	3	2, 3, 6, 7	L		EG2	DGZ		SPARKPLUG, Engine
6	68011844AA	6	2, 3, 6, 7	L		EG2	DGZ		COIL, Ignition

SPRINTER (VB)

SERIES	LINE	BODY	ENGINE	TRANSMISSION
L = LOWLINE	3 = HD DODGE 2WD 2 = Med. Duty DODGE 2WD	03 = CAB CHASSIS WHEEL BASE 3 05 = CAB CHASSIS WHEEL BASE 5 13 = 119 WB 53 = 119 WB 15 = VAN WHEEL BASE 5 55 = WAGON WHEEL BASE 5 17 = VAN WHEEL BASE 7	EG2 = 3.5L V6 Gas Engine EXM = 3.0L V6 Turbo Diesel Engine	DGZ = 5-Speed Auto W5A380 Transmission

Group - 08A

Instrument Panel and Radios and Consoles

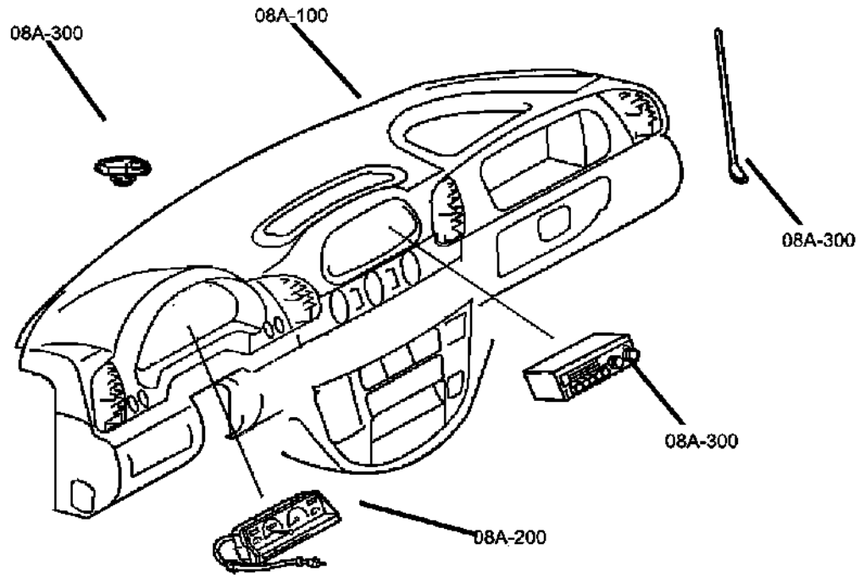

08A-100 Instrument Panel	08A-200 Instrument Panel Cluster	08A-300 Radio, Antenna, and Speakers	
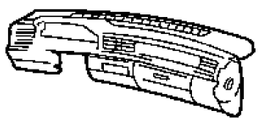	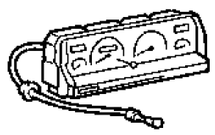	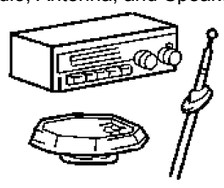	

Group - 08A Instrument Panel and Radios and Consoles

Illustration Title — Group-Fig. No.

Instrument Panel
Instrument Panel Frame ..... Fig. 08A - 110
Instrument Panel ..... Fig. 08A - 115
Instrument Panel Bezel & Related Parts ..... Fig. 08A - 120
Front Passenger Airbag ..... Fig. 08A - 125
Parktronic System (PTS) ..... Fig. 08A - 130

Instrument Panel Cluster
Instrument Panel Cluster ..... Fig. 08A - 205

Radio, Antenna, and Speakers
Radio ..... Fig. 08A - 310
Antenna ..... Fig. 08A - 320
Speakers ..... Fig. 08A - 330
Telecommunication / Car Phone ..... Fig. 08A - 340

Instrument Panel Frame
Figure 08A-110

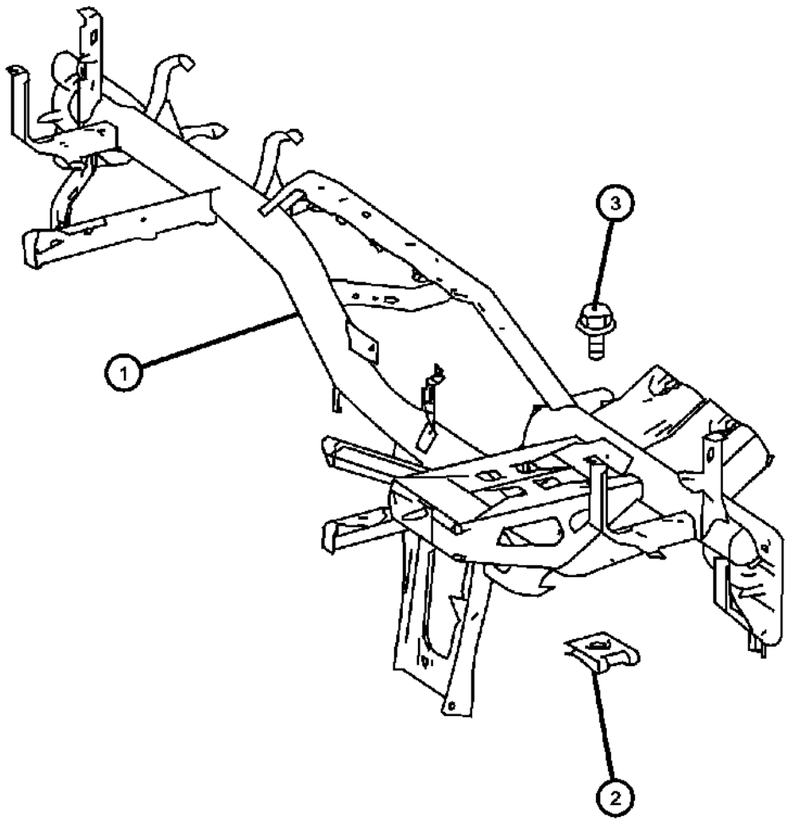

ITEM	PART NUMBER	QTY	LINE	SERIES	BODY	ENGINE	TRANS	TRIM	DESCRIPTION
1	68004781AA	1	2, 3, 6, 7	L		EG2, EXM	DGZ		FRAME, Instrument Panel
2									NUT, Spring
	68006573AA	8	2, 3, 6, 7	L	13, 15, 17, 53, 55	EG2, EXM	DGZ		
		14	3, 7	L	03, 05	EG2, EXM	DGZ		
3									SCREW
	05137660AA	4	3, 7	L	03, 05	EG2, EXM	DGZ		Frame To Body [M8 x 80]
		4	2, 3, 6, 7	L	13, 15, 17, 53, 55	EG2, EXM	DGZ		Frame To Body [M8 x 80]
	06104024AA	8	3, 7	L	03, 05	EG2, EXM	DGZ		Frame To Body [M8 x 25]
		8	2, 3, 6, 7	L	13, 15, 17, 53, 55	EG2, EXM	DGZ		Frame To Body [M8 x 25]

SPRINTER (VB)

SERIES	LINE	BODY	ENGINE	TRANSMISSION
L = LOWLINE	3 = HD DODGE 2WD 2 = Med. Duty DODGE 2WD	03 = CAB CHASSIS WHEEL BASE 3 05 = CAB CHASSIS WHEEL BASE 5 13 = 119 WB 53 = 119 WB 15 = VAN WHEEL BASE 5 55 = WAGON WHEEL BASE 5 17 = VAN WHEEL BASE 7	EG2 = 3.5L V6 Gas Engine EXM = 3.0L V6 Turbo Diesel Engine	DGZ = 5-Speed Auto W5A380 Transmission

Instrument Panel
Figure 08A-115

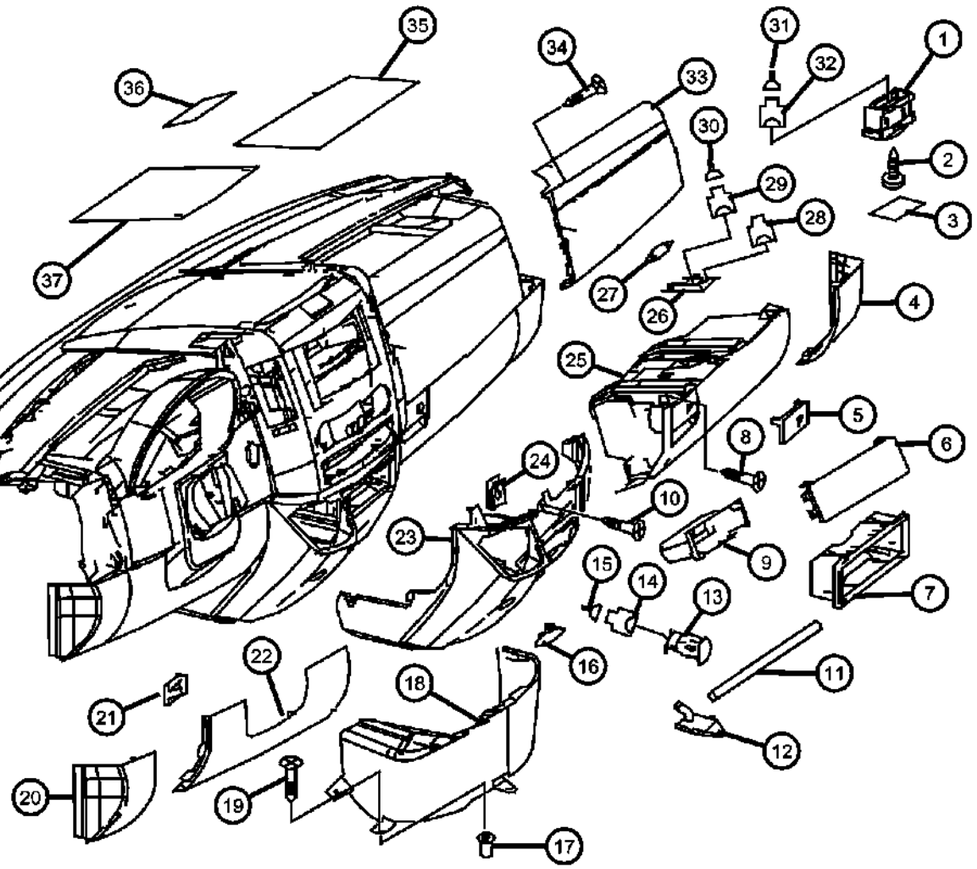

ITEM	PART NUMBER	QTY	LINE	SERIES	BODY	ENGINE	TRANS	TRIM	DESCRIPTION
1									BRACKET, Diagnostic Module
	05098297AA	1	3, 7	L	03, 05	EG2, EXM	DGZ		
		1	2, 3, 6, 7	L	13, 15, 17, 53, 55	EG2, EXM	DGZ		
2									BRACKET, Diagnostic Module
	05098297AA	1	3, 7	L	03, 05	EG2, EXM	DGZ		
		1	2, 3, 6, 7	L	13, 15, 17, 53, 55	EG2, EXM	DGZ		
3									PAD, Headlining
	05123547AA	1	3, 7	L	03, 05	EG2, EXM	DGZ		
		1	2, 3, 6, 7	L	13, 15, 17, 53, 55	EG2, EXM	DGZ		
4	68004759AA	1	2, 3, 6, 7	L		EG2, EXM	DGZ		CAP, Instrument Panel End
5									LATCH, Glovebox
	68010389AA	1	2, 3, 6, 7	L		EG2, EXM	DGZ		
	68010390AA	1	2, 3, 6, 7	L		EG2, EXM	DGZ		[JKA] Locking Glove Box
6									COVER, Radio Opening
	05103928AA	1	3, 7	L	03, 05	EG2, EXM	DGZ		
		1	2, 3, 6, 7	L	13, 15, 17, 53, 55	EG2, EXM	DGZ		
7	68010402AA	1	2, 3, 6, 7	L		EG2, EXM	DGZ		BRACKET, CD Changer
8	06104574AA	6	3, 7	L	03, 05	EG2, EXM	DGZ		SCREW, Tapping, Glove Compartment to Instrument Panel 4.8x16
9	68010400AA	1	2, 3, 6, 7	L		EG2, EXM	DGZ		BIN, Instrument Panel
10	06104574AA	6	3, 7	L	03, 05	EG2, EXM	DGZ		SCREW, Tapping, Console to Instrument Panel 4.8x16
11	68010393AA	1	2, 3, 6, 7	L		EG2, EXM	DGZ		HOSE, Glove Compartment
12	68010392AA	1	2, 3, 6, 7	L		EG2, EXM	DGZ		DUCT, AIR, Glove Compartment
13	68010399AA	1	2, 3, 6, 7	L		EG2, EXM	DGZ		POWER OUTLET, 12V
14	05103754AA	1	2, 3, 6, 7	L		EG2, EXM	DGZ		INSULATOR, 2 Way Female, Plug Socket 2-PIN
15	68016729AA	AR	2, 3, 6, 7	L		EG2, EXM	DGZ		TERMINAL
16	68010397AA	1	2, 3, 6, 7	L		EG2, EXM	DGZ		PLUG, Emergency Unlocking Mechanism
17									NUT, Plastic Snap-in
	05098837AB	4	3, 7	L	03, 05	EG2, EXM	DGZ		Panelling to Instrument Panel

SPRINTER (VB)

SERIES	LINE	BODY	ENGINE	TRANSMISSION
L = LOWLINE	3 = HD DODGE 2WD 2 = Med. Duty DODGE 2WD	03 = CAB CHASSIS WHEEL BASE 3 05 = CAB CHASSIS WHEEL BASE 5 13 = 119 WB 53 = 119 WB 15 = VAN WHEEL BASE 5 55 = WAGON WHEEL BASE 5 17 = VAN WHEEL BASE 7	EG2 = 3.5L V6 Gas Engine EXM = 3.0L V6 Turbo Diesel Engine	DGZ = 5-Speed Auto W5A380 Transmission

AR = use ase required - = Non illustrrated part

<< RETURN TO GROUP INDEX

Instrument Panel
Figure 08A-115

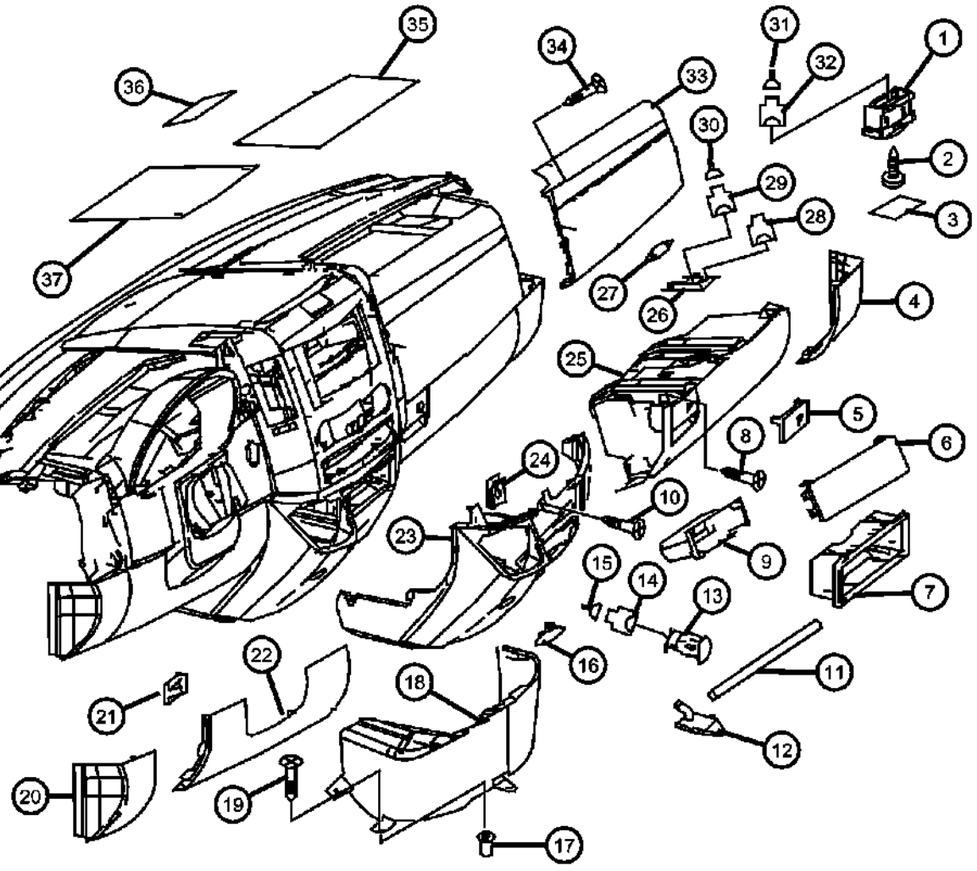

ITEM	PART NUMBER	QTY	LINE	SERIES	BODY	ENGINE	TRANS	TRIM	DESCRIPTION
		4	2, 3, 6, 7	L	13, 15, 17, 53, 55	EG2, EXM	DGZ		Panelling to Instrument Panel
18	68004765AA	1	2, 3, 6, 7	L	13, 15, 17, 53, 55	EG2, EXM	DGZ		COVER, Footwell Center
19	06104574AA	4	2, 3, 6, 7	L		EG2, EXM	DGZ		SCREW, Tapping, Panelling to Instrument Panel 4.8x16
20	68010406AA	1	2, 3, 6, 7	L		EG2, EXM	DGZ		CAP, Instrument Panel End, Left Outside Bottom
21	68010404AA	1	2, 3, 6, 7	L		EG2, EXM	DGZ		CLAMP, Bottom Covering
22	68010403AA	1	2, 3, 6, 7	L		EG2, EXM	DGZ		COVER, Instrument Panel, Steering Column Opening, Bottom
23	68010396AA	1	2, 3, 6, 7	L		EG2, EXM	DGZ		COVER, Instrument Panel, Gearshift Mechanism
24	68010398AA	2	2, 3, 6, 7	L		EG2, EXM	DGZ		CLIP, Console to Instrument Panel
25									GLOVE BOX, Instrument Panel
	68010387AA	1	2, 3, 6, 7	L		EG2, EXM	DGZ		
	68010388AA	1	2, 3, 6, 7	L		EG2, EXM	DGZ		[JKA] Locking Glove Compartment
26	68010391AA	1	2, 3, 6, 7	L		EG2, EXM	DGZ		LAMP, Glove Box
27									BULB, 12V 5W
	05096968AA	1	3, 7	L	03, 05	EG2, EXM	DGZ		Glove Compartment Interior Light 12V-5W
		1	2, 3, 6, 7	L	13, 15, 17, 53, 55	EG2, EXM	DGZ		Glove Compartment Interior Light 12V-5W
28	68004757AA	1	2, 3, 6, 7	L		EG2, EXM	DGZ		CONNECTOR, 2-PIN
29	68004757AA	1	2, 3, 6, 7	L		EG2, EXM	DGZ		CONNECTOR, Glove Compartment Lighting 2-PIN
30	05103882AA	1	2, 3, 6, 7	L					TERMINAL
31	05120274AA	1	2, 3, 6, 7	L		EG2, EXM	DGZ		INSULATOR, Diagnosis Box 16-PIN;xX11
32	68016730AA	AR	2, 3, 6, 7	L		EG2, EXM	DGZ		TERMINAL, X11
33	68010384AA	1	2, 3, 6, 7	L	05, 13, 15, 17	EG2, EXM	DGZ		COVER, Instrument Panel
34	06104574AA	4	2, 3, 6, 7	L		EG2, EXM	DGZ		SCREW, Tapping, Covering to Instrument Panel 4.8x16
35	68010409AA	1	2, 3, 6, 7	L		EG2, EXM	DGZ		REINFORCEMENT, Stowage Tray, Right
36	68010401AA	2	2, 3, 6, 7	L		EG2, EXM	DGZ		REINFORCEMENT
37									REINFORCEMENT

SPRINTER (VB)

SERIES	LINE	BODY	ENGINE	TRANSMISSION
L = LOWLINE	3 = HD DODGE 2WD 2 = Med. Duty DODGE 2WD	03 = CAB CHASSIS WHEEL BASE 3 05 = CAB CHASSIS WHEEL BASE 5 13 = 119 WB 53 = 119 WB 15 = VAN WHEEL BASE 5 55 = WAGON WHEEL BASE 5 17 = VAN WHEEL BASE 7	EG2 = 3.5L V6 Gas Engine EXM = 3.0L V6 Turbo Diesel Engine	DGZ = 5-Speed Auto W5A380 Transmission

AR = use ase required - = Non illustrrated part

<< RETURN TO GROUP INDEX

Instrument Panel
Figure 08A-115

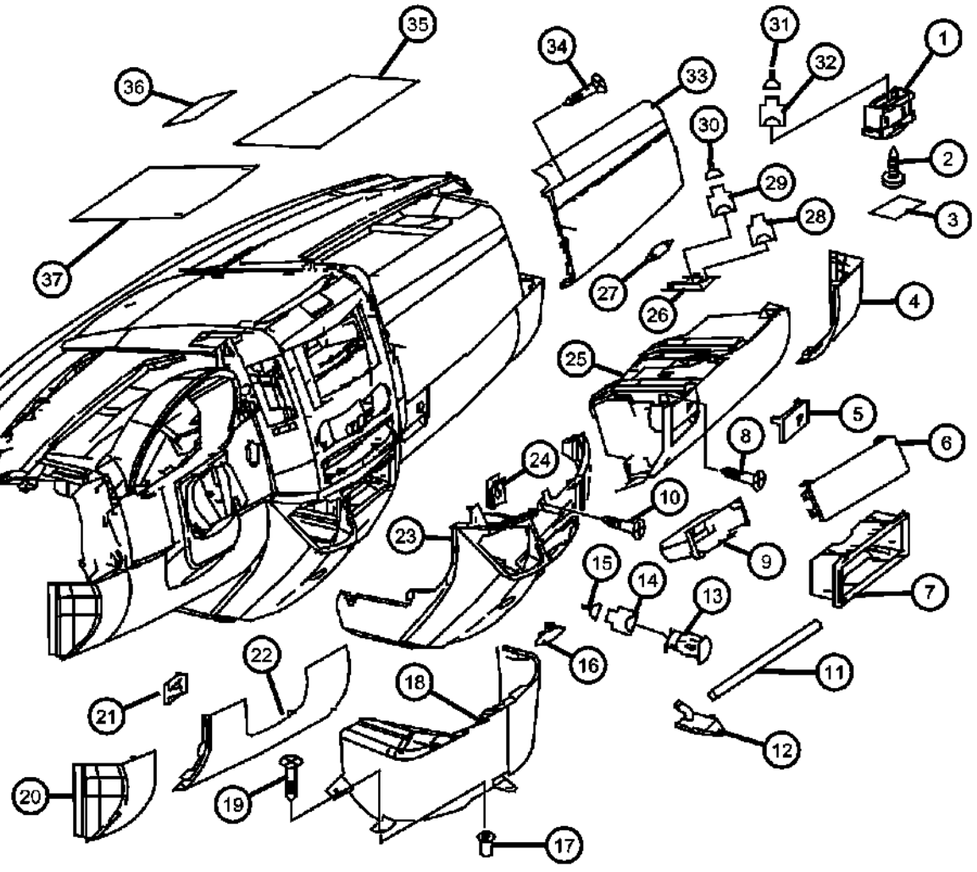

ITEM	PART NUMBER	QTY	LINE	SERIES	BODY	ENGINE	TRANS	TRIM	DESCRIPTION
	68010407AA	1	2, 3, 6, 7	L		EG2, EXM	DGZ		
	68010408AA	1	2, 3, 6, 7	L		EG2, EXM	DGZ		[CXG] Hinged Lid for Center Stack Bin

SPRINTER (VB)

SERIES	LINE	BODY	ENGINE	TRANSMISSION
L = LOWLINE	3 = HD DODGE 2WD 2 = Med. Duty DODGE 2WD	03 = CAB CHASSIS WHEEL BASE 3 05 = CAB CHASSIS WHEEL BASE 5 13 = 119 WB 53 = 119 WB 15 = VAN WHEEL BASE 5 55 = WAGON WHEEL BASE 5 17 = VAN WHEEL BASE 7	EG2 = 3.5L V6 Gas Engine EXM = 3.0L V6 Turbo Diesel Engine	DGZ = 5-Speed Auto W5A380 Transmission

Instrument Panel Bezel & Related Parts
Figure 08A-120

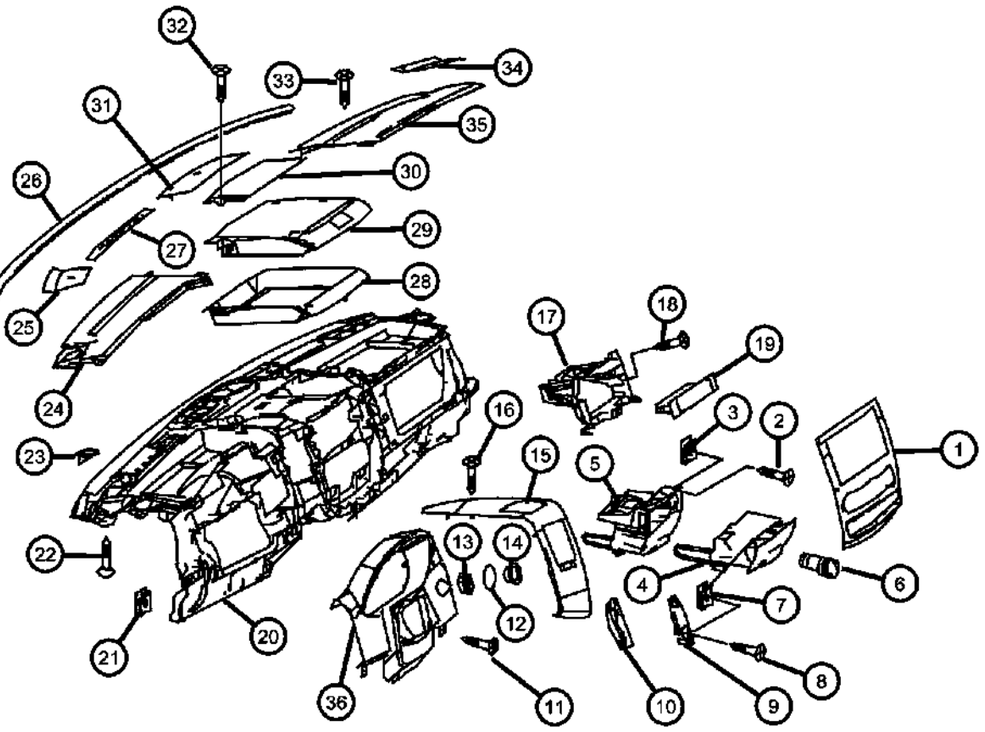

ITEM	PART NUMBER	QTY	LINE	SERIES	BODY	ENGINE	TRANS	TRIM	DESCRIPTION
1	68010405AA	1	2, 3, 6, 7	L		EG2, EXM	DGZ		BEZEL, Instrument Panel, Central Top
2	06104574AA	3	3, 7	L	03, 05	EG2, EXM	DGZ		SCREW, Tapping, Insert Mounting 4.8x16
3									NUT, Spring U Type
	68010366AA	2	2, 3, 6, 7	L	13, 15, 17, 53, 55	EG2, EXM	DGZ		Insert Mounting
		2	3, 7	L	03, 05	EG2, EXM	DGZ		Insert Mounting
4	68004763AA	1	2, 3, 6, 7	L		EG2, EXM	DGZ		ASHTRAY, Instrument panel
5	68004761AA	1	2, 3, 6, 7	L		EG2, EXM	DGZ		ASHTRAY, Instrument panel
6									ELEMENT, Cigar Lighter
	05103679AA	1	3, 7	L	03, 05	EG2, EXM	DGZ		
		1	2, 3, 6, 7	L	13, 15, 17, 53, 55	EG2, EXM	DGZ		
7									NUT, Spring U Type
	68010366AA	3	3, 7	L	03, 05	EG2, EXM	DGZ		Console to Instrument Panel
		3	2, 3, 6, 7	L	13, 15, 17, 53, 55	EG2, EXM	DGZ		Console to Instrument Panel
8									SCREW, Tapping
	06104574AA	3	2, 3, 6, 7	L		EG2, EXM	DGZ		Console to Instrument Panel 4.8x16
		3	3, 7	L	03, 05	EG2, EXM	DGZ		Console to Instrument Panel 4.8x16
9	68004755AA	1	2, 3, 6, 7	L		EG2, EXM	DGZ		BRACKET, Cell Phone
10	68010386AA	1	2, 3, 6, 7	L		EG2, EXM	DGZ		BRACKET
11	06104574AA	7	2, 3, 6, 7	L	13, 15, 17, 53, 55	EG2, EXM	DGZ		SCREW, Tapping
12	68023477AA	1	2, 3, 6, 7	L		EG2, EXM	DGZ		RING
13	68023477AA	1							SPACER, (NOT SERVICED)
14	68007010AA	1	2, 3, 6, 7	L		EG2, EXM	DGZ		RING, Ignition Lock
15									COVER
	68010394AA	1	2, 3, 6, 7	L		EG2, EXM	DGZ		Left,Central
	68010395AA	1	2, 3, 6, 7	L		EG2, EXM	DGZ		Right,Central
16									SCREW, Tapping
	06104574AA	4	2, 3, 6, 7	L		EG2, EXM	DGZ		Mounting Plate Cover 4.8x16
		4	3, 7	L	03, 05	EG2, EXM	DGZ		Mounting Plate Cover 4.8x16
17									BRACKET, Radio

SPRINTER (VB)

SERIES	LINE	BODY	ENGINE	TRANSMISSION
L = LOWLINE	3 = HD DODGE 2WD 2 = Med. Duty DODGE 2WD	03 = CAB CHASSIS WHEEL BASE 3 05 = CAB CHASSIS WHEEL BASE 5 13 = 119 WB 53 = 119 WB 15 = VAN WHEEL BASE 5 55 = WAGON WHEEL BASE 5 17 = VAN WHEEL BASE 7	EG2 = 3.5L V6 Gas Engine EXM = 3.0L V6 Turbo Diesel Engine	DGZ = 5-Speed Auto W5A380 Transmission

AR = use ase required - = Non illustrrated part

Instrument Panel Bezel & Related Parts
Figure 08A-120

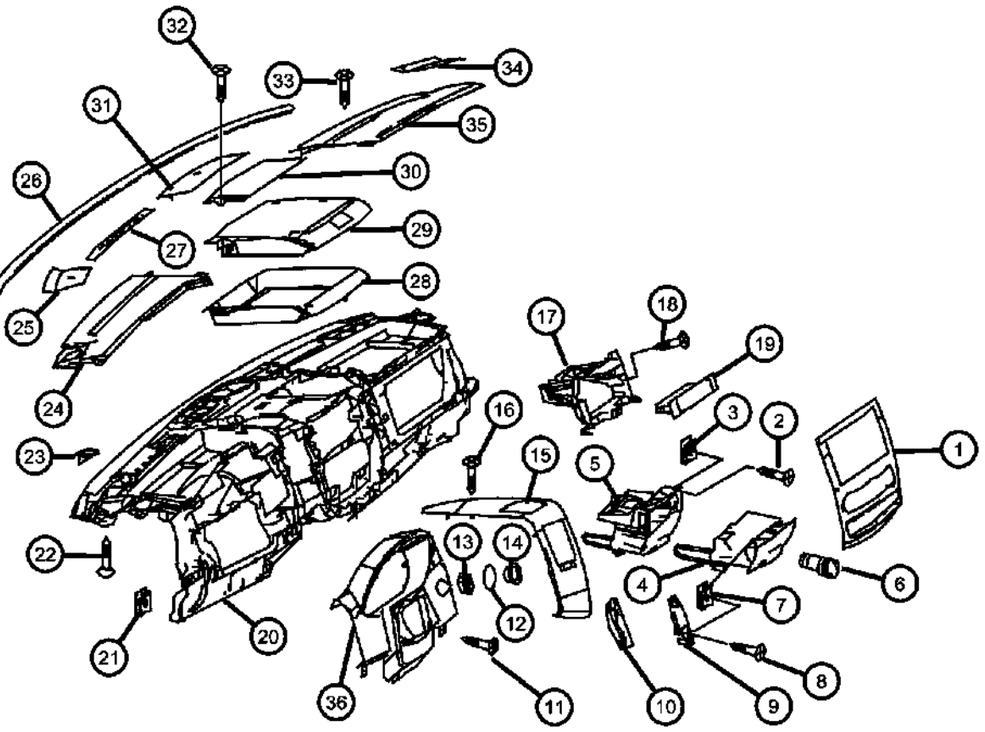

ITEM	PART NUMBER	QTY	LINE	SERIES	BODY	ENGINE	TRANS	TRIM	DESCRIPTION
	68010369AA	1	2, 3, 6, 7	L		EG2, EXM	DGZ		Radio Set
	68004754AA	1	2, 3, 6, 7	L		EG2, EXM	DGZ		Navigation
18									SCREW, Tapping
	06104574AA	2	2, 3, 6, 7	L		EG2, EXM	DGZ		Console Mounting 4.8x16
		2	3, 7	L	03, 05	EG2, EXM	DGZ		Console Mounting 4.8x16
19	68010370AA	1	2, 3, 6, 7	L		EG2, EXM	DGZ		BEZEL, Instrument Panel, Central Console
20	68010364AA	1	2, 3, 6, 7	L		EG2, EXM	DGZ		PANEL, Instrument
21									NUT, Spring U Type
	68010366AA	63	3, 7	L	03, 05	EG2, EXM	DGZ		Instrument Panel to Body
		63	2, 3, 6, 7	L	13, 15, 17, 53, 55	EG2, EXM	DGZ		Instrument Panel to Body
22	06104506AA	1	2, 3, 6, 7	L		EG2, EXM	DGZ		SCREW, Self-Tapping, Instrument Panel to Body 4.8x16
23	68010368AA	1	2, 3, 6, 7	L		EG2, EXM	DGZ		CLIP, Spring
24	68010372AA	1	2, 3, 6, 7	L		EG2, EXM	DGZ		COVER, Instrument Panel, Defroster Left
25	68010374AA	1	2, 3, 6, 7	L		EG2, EXM	DGZ		GRILLE, Speaker, Loud-speaker,Left
26	68010371AA	1	2, 3, 6, 7	L		EG2, EXM	DGZ		SEAL, Windshield
27									GRILLE
	68010380AA	1	2, 3, 6, 7	L		EG2, EXM	DGZ		Defroster, Left
	68010381AA	1	2, 3, 6, 7	L		EG2, EXM	DGZ		Defroster,Right
28	68010376AA	1	2, 3, 6, 7	L		EG2, EXM	DGZ		BIN, Storage, Central Top
29	68010377AA	1	2, 3, 6, 7	L		EG2, EXM	DGZ		BIN, Storage, Central Top
30									COVER, Instrument Panel
	68010412AA	1	2, 3, 6, 7	L	13, 15, 17, 53, 55	EXM, EG2	DGZ		With [XAG]
	68010378AA	1	2, 3, 6, 7	L		EG2, EXM	DGZ		Without [CXG]
31	68010379AA	1	2, 3, 6, 7	L		EG2, EXM	DGZ		COVER, Instrument Panel, Central Loudspeaker
32									SCREW, Tapping
	06104574AA	4	2, 3, 6, 7	L		EG2, EXM	DGZ		Storage Box Fastening 4.8x16
		4	3, 7	L	03, 05	EG2, EXM	DGZ		Storage Box Fastening 4.8x16
33	06104574AA	7	3, 7	L	03, 05	EG2, EXM	DGZ		SCREW, Tapping, Mounting Cover 4.8x16

SPRINTER (VB)

SERIES	LINE	BODY	ENGINE	TRANSMISSION
L = LOWLINE	3 = HD DODGE 2WD 2 = Med. Duty DODGE 2WD	03 = CAB CHASSIS WHEEL BASE 3 05 = CAB CHASSIS WHEEL BASE 5 13 = 119 WB 53 = 119 WB 15 = VAN WHEEL BASE 5 55 = WAGON WHEEL BASE 5 17 = VAN WHEEL BASE 7	EG2 = 3.5L V6 Gas Engine EXM = 3.0L V6 Turbo Diesel Engine	DGZ = 5-Speed Auto W5A380 Transmission

Instrument Panel Bezel & Related Parts
Figure 08A-120

ITEM	PART NUMBER	QTY	LINE	SERIES	BODY	ENGINE	TRANS	TRIM	DESCRIPTION
34	68010375AA	1	2, 3, 6, 7	L		EG2, EXM	DGZ		GRILLE, Speaker, Loud-speaker,Right
35	68010373AA	1	2, 3, 6, 7	L		EG2, EXM	DGZ		COVER, Instrument Panel, Defroster,Right
36	68010383AA	1	2, 3, 6, 7	L		EG2, EXM	DGZ		BEZEL, Cluster

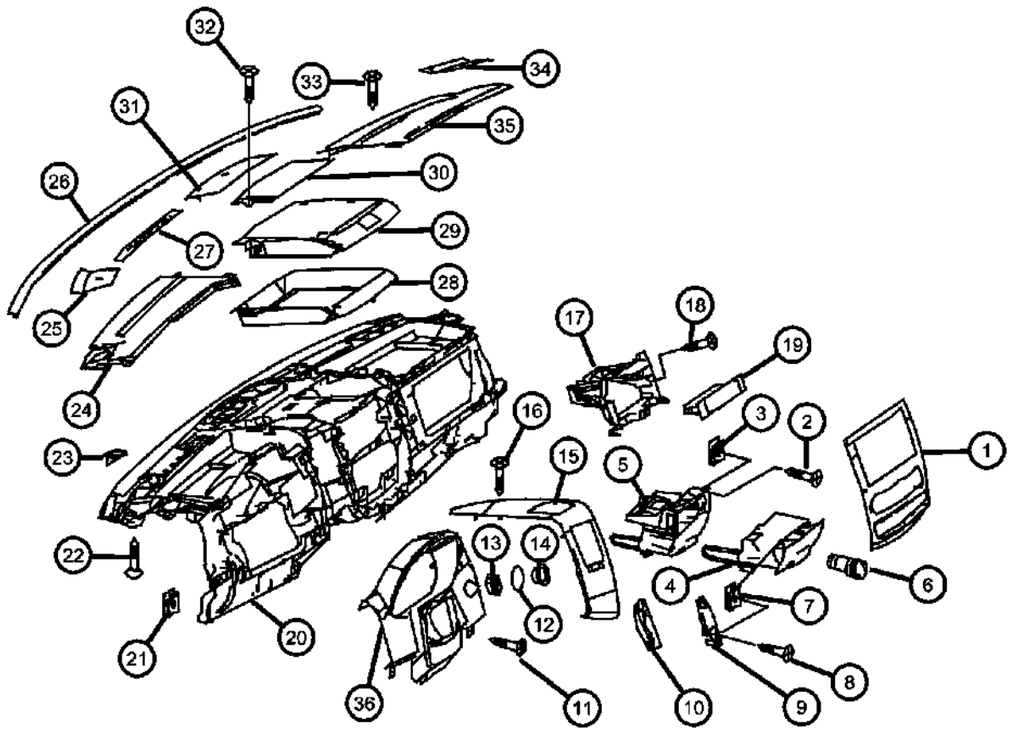

SPRINTER (VB)

SERIES	LINE	BODY	ENGINE	TRANSMISSION
L = LOWLINE	3 = HD DODGE 2WD 2 = Med. Duty DODGE 2WD	03 = CAB CHASSIS WHEEL BASE 3 05 = CAB CHASSIS WHEEL BASE 5 13 = 119 WB 53 = 119 WB 15 = VAN WHEEL BASE 5 55 = WAGON WHEEL BASE 5 17 = VAN WHEEL BASE 7	EG2 = 3.5L V6 Gas Engine EXM = 3.0L V6 Turbo Diesel Engine	DGZ = 5-Speed Auto W5A380 Transmission

Front Passenger Airbag
Figure 08A-125

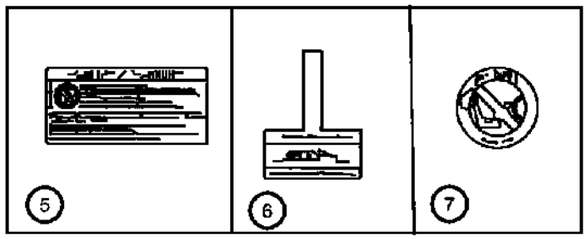

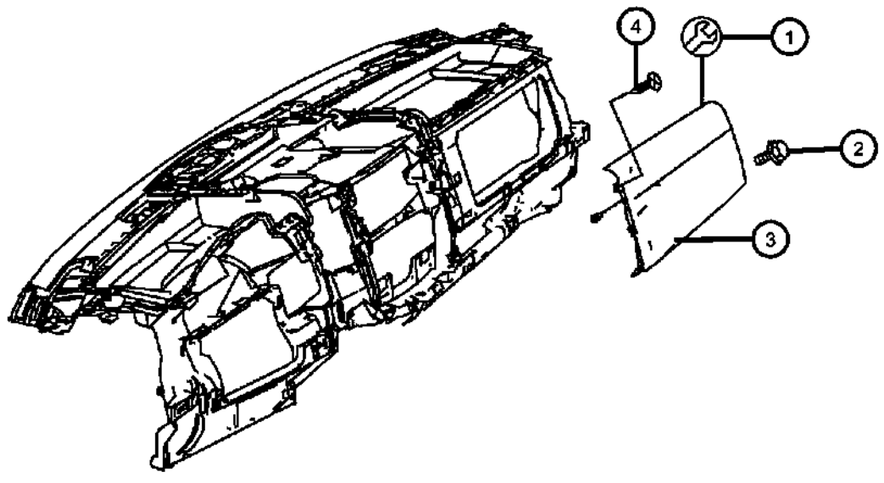

ITEM	PART NUMBER	QTY	LINE	SERIES	BODY	ENGINE	TRANS	TRIM	DESCRIPTION
1	68016726AA	2	2, 3, 6, 7	L		EG2, EXM	DGZ		CONNECTOR, Wiring, Airbag,Passenger Side 2-PIN
2	68010411AA	4	2, 3, 6, 7	L		EG2, EXM	DGZ		SCREW
3	68010410AA	1	2, 3, 6, 7	L		EG2, EXM	DGZ		AIR BAG, Passenger
4	06104574AA	4	2, 3, 6, 7	L		EG2, EXM	DGZ		SCREW, Tapping, 4.8x16
5	05096859AA	2	2, 3, 6, 7	L		EG2, EXM	DGZ		LABEL, Air Bag Warning, German/English
6	05161821AA	1	2, 3, 6, 7	L		EG2, EXM	DGZ		LABEL, Airbag, Stuck to Glove Compartment
7	05096894AA	1	2, 3, 6, 7	L		EG2, EXM	DGZ		LABEL, Airbag

SPRINTER (VB)

SERIES	LINE	BODY	ENGINE	TRANSMISSION
L = LOWLINE	3 = HD DODGE 2WD 2 = Med. Duty DODGE 2WD	03 = CAB CHASSIS WHEEL BASE 3 05 = CAB CHASSIS WHEEL BASE 5 13 = 119 WB 53 = 119 WB 15 = VAN WHEEL BASE 5 55 = WAGON WHEEL BASE 5 17 = VAN WHEEL BASE 7	EG2 = 3.5L V6 Gas Engine EXM = 3.0L V6 Turbo Diesel Engine	DGZ = 5-Speed Auto W5A380 Transmission

Parktronic System (PTS)
Figure 08A-130

ITEM	PART NUMBER	QTY	LINE	SERIES	BODY	ENGINE	TRANS	TRIM	DESCRIPTION
1	68010513AA	1	2, 3, 6, 7	L	13, 15, 17, 53, 55	EG2, EXM	DGZ		DISPLAY, Parking Assist
2	05183532AA	1	2, 3, 6, 7	L	13, 15, 17, 53, 55	EG2, EXM	DGZ		CONNECTOR
3	05133990AA	3	2, 3, 6, 7	L	13, 15, 17, 53, 55	EG2, EXM	DGZ		TERMINAL, Male

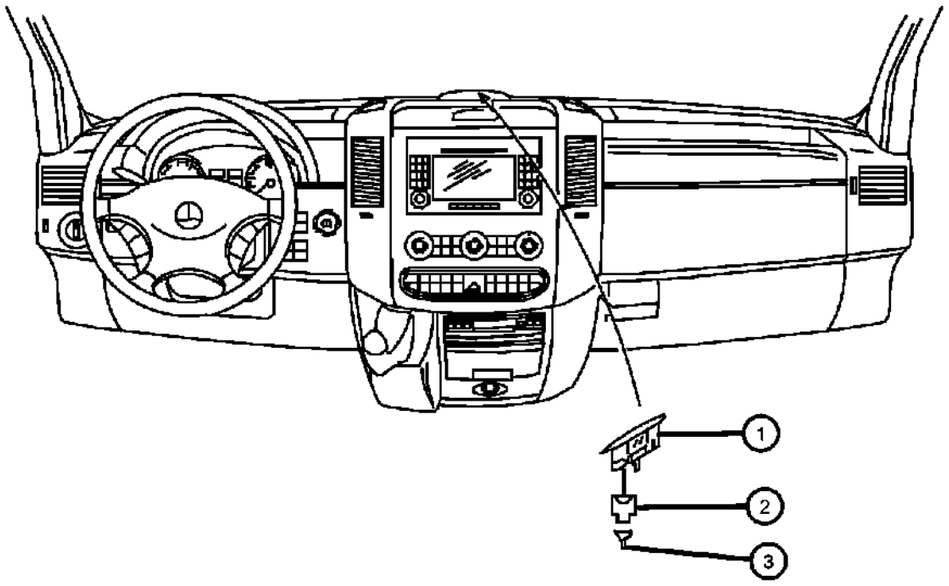

SPRINTER (VB)

SERIES	LINE	BODY	ENGINE	TRANSMISSION
L = LOWLINE	3 = HD DODGE 2WD 2 = Med. Duty DODGE 2WD	03 = CAB CHASSIS WHEEL BASE 3 05 = CAB CHASSIS WHEEL BASE 5 13 = 119 WB 53 = 119 WB 15 = VAN WHEEL BASE 5 55 = WAGON WHEEL BASE 5 17 = VAN WHEEL BASE 7	EG2 = 3.5L V6 Gas Engine EXM = 3.0L V6 Turbo Diesel Engine	DGZ = 5-Speed Auto W5A380 Transmission

Instrument Panel Cluster
Figure 08A-205

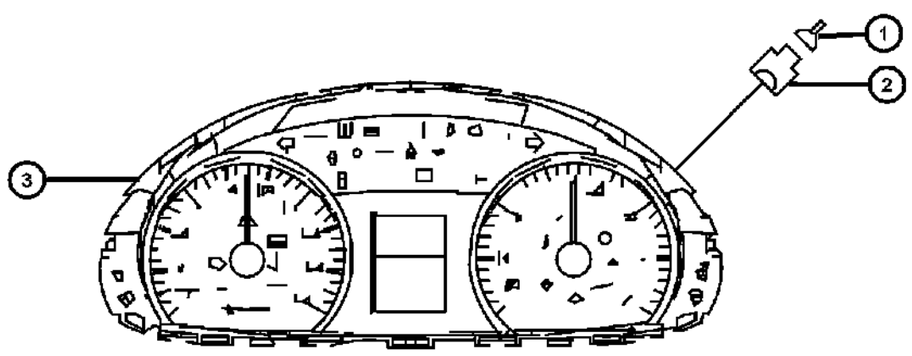

ITEM	PART NUMBER	QTY	LINE	SERIES	BODY	ENGINE	TRANS	TRIM	DESCRIPTION
1									TERMINAL
	05103873AA	3	3, 7	L	03, 05	EG2, EXM	DGZ		
		3	2, 3, 6, 7	L	13, 15, 17, 53, 55	EG2, EXM	DGZ		
2		3							SOCKET, (NOT SERVICED)
3									CLUSTER, Instrument Panel
	68010463AA	1	2, 3, 6, 7	L		EXM	DGZ		With [JAV + 3SL]
	68010464AA	1	2, 3, 6, 7	L		EXM	DGZ		With [3SL]
	68010465AA	1	2, 3, 6, 7	L		EG2	DGZ		With [JAV]
	68010467AA	1	2, 3, 6, 7	L		EG2	DGZ		With [3SL] Without [JAV]
	68019248AA	1	2, 3	L		EXM	DGZ		With [JAV] Without [3SL]
	68019258AA	1	2, 3	L		EXM	DGZ		Without [-3SL And -JAV]

SPRINTER (VB)

SERIES	LINE	BODY	ENGINE	TRANSMISSION
L = LOWLINE	3 = HD DODGE 2WD 2 = Med. Duty DODGE 2WD	03 = CAB CHASSIS WHEEL BASE 3 05 = CAB CHASSIS WHEEL BASE 5 13 = 119 WB 53 = 119 WB 15 = VAN WHEEL BASE 5 55 = WAGON WHEEL BASE 5 17 = VAN WHEEL BASE 7	EG2 = 3.5L V6 Gas Engine EXM = 3.0L V6 Turbo Diesel Engine	DGZ = 5-Speed Auto W5A380 Transmission

Radio
Figure 08A-310

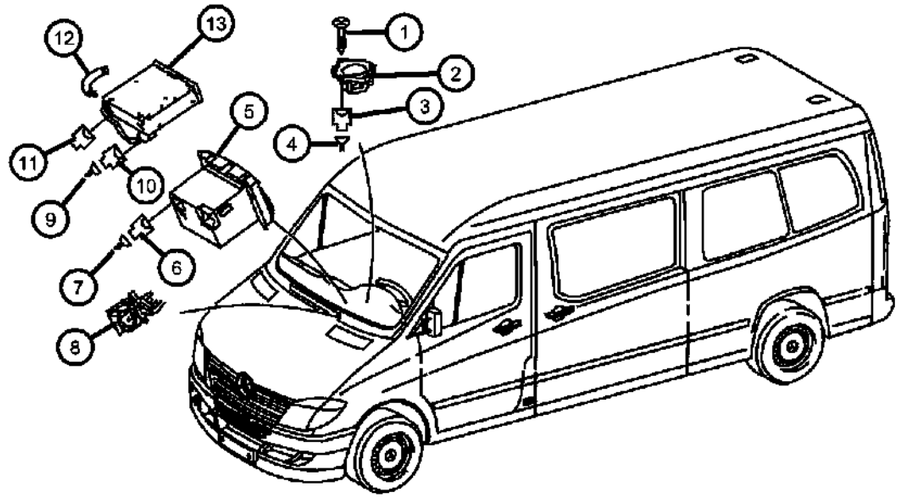

ITEM	PART NUMBER	QTY	LINE	SERIES	BODY	ENGINE	TRANS	TRIM	DESCRIPTION
1	06104574AA	2	2, 3, 6, 7	L		EG2, EXM	DGZ		SCREW, Tapping, Center Fill 4.8x16
2	68010542AA	1	2, 3, 6, 7	L		EG2, EXM	DGZ		SPEAKER, Center
3	05101166AA	1	2, 3, 6, 7	L		EG2, EXM	DGZ		CONNECTOR, Center Fill Speaker 2-PIN;H4/27
4									TERMINAL
	05103873AA	3	3, 7	L	03, 05	EG2, EXM	DGZ		
		3	2, 3, 6, 7	L	13, 15, 17, 53, 55	EG2, EXM	DGZ		
5									RADIO, AM/FM with CD
	68010518AA	1	2, 3, 6, 7	L		EG2, EXM	DGZ		With [RBV]
	68010520AA	1	2, 3, 6, 7	L		EG2, EXM	DGZ		With [RBE]
6	05101166AA	1	2, 3, 6, 7	L		EG2, EXM	DGZ		CONNECTOR, Additional Fan Operating Unit 2-PIN;M4/12
7									TERMINAL
	05103873AA	3	2, 3, 6, 7	L	13, 15, 17, 53, 55	EG2, EXM	DGZ		
		3	3, 7	L	03, 05	EG2, EXM	DGZ		
8	68010529AA	1	2, 3, 6, 7	L		EG2, EXM	DGZ		BRACKET, Operating Unit
9									TERMINAL
	05103873AA	3	3, 7	L	03, 05	EG2, EXM	DGZ		
		3	2, 3, 6, 7	L	13, 15, 17, 53, 55	EG2, EXM	DGZ		
10	05120717AA	1	2, 3, 6, 7	L	13, 15, 17, 53, 55	EG2, EXM	DGZ		CONNECTOR, CD Changer 3-PIN
11	68011188AA	1	2, 3, 6, 7	L		EG2, EXM	DGZ		CONNECTOR, CD Changer Most A2/6
12	68011088AA	1	2, 3, 6, 7	L		EG2, EXM	DGZ		COVER, CD Changer A2/6
13	68010533AA	1	2, 3, 6, 7	L		EG2, EXM	DGZ		PLAYER KIT, CD Changer - 6 Disc

SPRINTER (VB)

SERIES	LINE	BODY	ENGINE	TRANSMISSION
L = LOWLINE	3 = HD DODGE 2WD 2 = Med. Duty DODGE 2WD	03 = CAB CHASSIS WHEEL BASE 3 05 = CAB CHASSIS WHEEL BASE 5 13 = 119 WB 53 = 119 WB 15 = VAN WHEEL BASE 5 55 = WAGON WHEEL BASE 5 17 = VAN WHEEL BASE 7	EG2 = 3.5L V6 Gas Engine EXM = 3.0L V6 Turbo Diesel Engine	DGZ = 5-Speed Auto W5A380 Transmission

AR = use ase required - = Non illustrrated part

<< RETURN TO GROUP INDEX

Antenna
Figure 08A-320

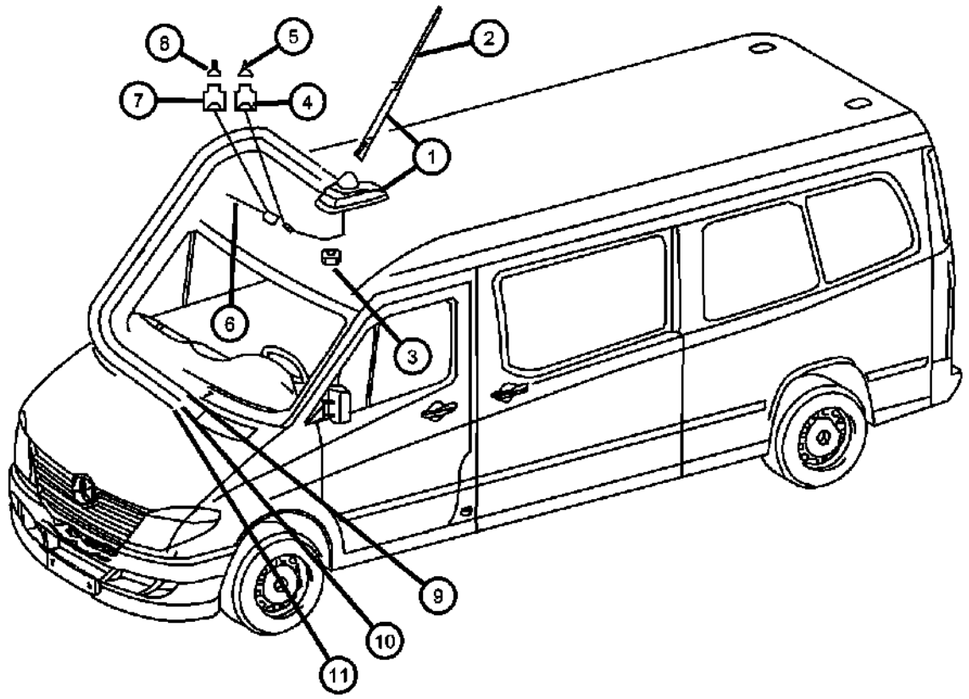

ITEM	PART NUMBER	QTY	LINE	SERIES	BODY	ENGINE	TRANS	TRIM	DESCRIPTION
1									ANTENNA
	68013417AA	1	2, 3, 6, 7	L		EG2, EXM	DGZ		With [RBV And Or RBE + XFV] Mobile Phone System
	68013419AA	1	2, 3, 6, 7	L		EG2, EXM	DGZ		[RBV Or RBE Or RA9] Radio / Mast & Base
	68013420AA	1	2, 3, 6, 7	L		EG2, EXM	DGZ		[RB4 Or RDK] [GPS] Global Positioning System / Mast & Base[GPS] Global Positioning System / Mast & Base
2	68013421AA	1	2, 3, 6, 7	L		EG2, EXM	DGZ		MAST, Antenna
3									NUT
	68004878AA	1	3, 7	L	03, 05	EG2, EXM	DGZ		Antenna Base Mounting / [M6]
		1	2, 3, 6, 7	L	13, 15, 17, 53, 55	EG2, EXM	DGZ		Antenna Base Mounting / [M6]
	68013422AA	1	2, 3, 6, 7	L		EG2, EXM	DGZ		Antenna Base Mounting
4	05120685AA	1	2, 3, 6, 7	L		EG2, EXM	DGZ		INSULATOR, Antenna Amplifier / [1 Pin A2/18]
5	05120734AA	1	2, 3, 6, 7	L		EG2, EXM	DGZ		TERMINAL, Male, [1.0 - 2.5 MM2; A2/18]
6	68016034AA	1	2, 3, 6, 7	L	13, 15, 17, 53, 55	EG2, EXM	DGZ		CABLE, Antenna, Ground Connection Antenna With [MX2 Or MX1]
7	68011322AA	2	2, 3, 6, 7	L		EG2, EXM	DGZ		ISOLATOR, Antenna Amplifier [A2/18]
8	05103871AA	AR	2, 3, 6, 7	L		EG2, EXM	DGZ		TERMINAL, Female, [1.5 - 2.5 MM2; A2/18]
9	68011524AA	1	2, 3, 6, 7	L		EG2, EXM	DGZ		CABLE, Antenna, Operating Unit [3.643 MM]
10	68011558AA	1	3, 6, 7, 2	L		EG2, EXM	DGZ		CABLE, Antenna, Telephone Cable [3.559 MM]
11	68013437AA	1	2, 3, 6, 7	L		EG2, EXM	DGZ		CABLE, Antenna, [GPS] Global Positioning System [3.578 MM]

SPRINTER (VB)

SERIES	LINE	BODY	ENGINE	TRANSMISSION
L = LOWLINE	3 = HD DODGE 2WD 2 = Med. Duty DODGE 2WD	03 = CAB CHASSIS WHEEL BASE 3 05 = CAB CHASSIS WHEEL BASE 5 13 = 119 WB 53 = 119 WB 15 = VAN WHEEL BASE 5 55 = WAGON WHEEL BASE 5 17 = VAN WHEEL BASE 7	EG2 = 3.5L V6 Gas Engine EXM = 3.0L V6 Turbo Diesel Engine	DGZ = 5-Speed Auto W5A380 Transmission

Speakers
Figure 08A-330

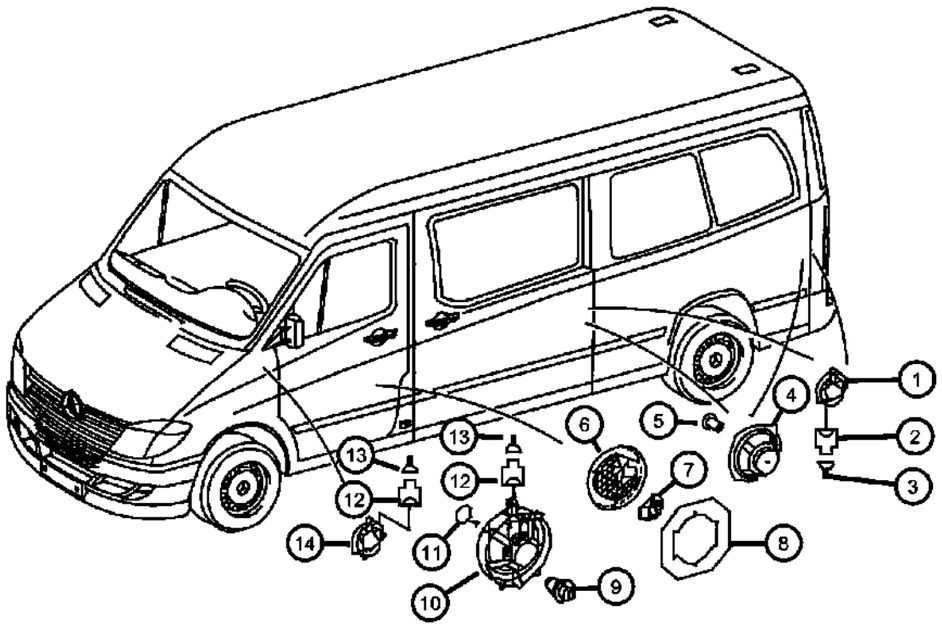

ITEM	PART NUMBER	QTY	LINE	SERIES	BODY	ENGINE	TRANS	TRIM	DESCRIPTION
1	68010541AA	4	2, 3, 6, 7	L		EG2, EXM	DGZ		SPEAKER, Rear
2	05101166AA	1	2, 3, 6, 7	L		EG2, EXM	DGZ		CONNECTOR
3									TERMINAL
	05103873AA	3	3, 7	L	03, 05	EG2, EXM	DGZ		
		3	2, 3, 6, 7	L	13, 15, 17, 53, 55	EG2, EXM	DGZ		
4	68013427AA	4	2, 3, 6, 7	L	53, 55	EG2, EXM	DGZ		SPEAKER, Rear
5	05133554AA	16	2, 3, 6, 7	L	13, 15, 17, 53, 55	EG2, EXM	DGZ		RIVET
6	1HB60XDVAA	4	2, 3, 6, 7	L	53, 55	EG2, EXM	DGZ		GRILLE, Speaker
7	1HB61XDVAA	1	2, 3, 6, 7	L	53, 55	EG2, EXM	DGZ		GRILLE, Speaker
8	68010291AA	1	2, 3, 6, 7	L	13, 15, 17, 53, 55	EG2, EXM	DGZ		REINFORCEMENT
9	68010062AA	8	3, 7	L		EG2, EXM	DGZ		RETAINER
10	68010059AA	2	3, 6, 7, 2	L		EG2, EXM	DGZ		SPEAKER, Front Door
11	68010063AA	8	2, 3, 6, 7	L		EG2, EXM	DGZ		SCREW, SCREW
12	05101166AA	1	2, 3, 6, 7	L		EG2, EXM	DGZ		CONNECTOR
13									TERMINAL
	05103873AA	3	3, 7	L	03, 05	EG2, EXM	DGZ		
		3	2, 3, 6, 7	L	13, 15, 17, 53, 55	EG2, EXM	DGZ		
14	68010541AA	4	2, 3, 6, 7	L		EG2, EXM	DGZ		SPEAKER, Rear
-15	68016759AA	2	2, 3, 6, 7	L		EG2, EXM	DGZ		CONNECTOR, Wiring, Speaker Contact [H4/83 / H4/80]

SPRINTER (VB)

SERIES	LINE	BODY	ENGINE	TRANSMISSION
L = LOWLINE	3 = HD DODGE 2WD 2 = Med. Duty DODGE 2WD	03 = CAB CHASSIS WHEEL BASE 3 05 = CAB CHASSIS WHEEL BASE 5 13 = 119 WB 53 = 119 WB 15 = VAN WHEEL BASE 5 55 = WAGON WHEEL BASE 5 17 = VAN WHEEL BASE 7	EG2 = 3.5L V6 Gas Engine EXM = 3.0L V6 Turbo Diesel Engine	DGZ = 5-Speed Auto W5A380 Transmission

Telecommunication / Car Phone
Figure 08A-340

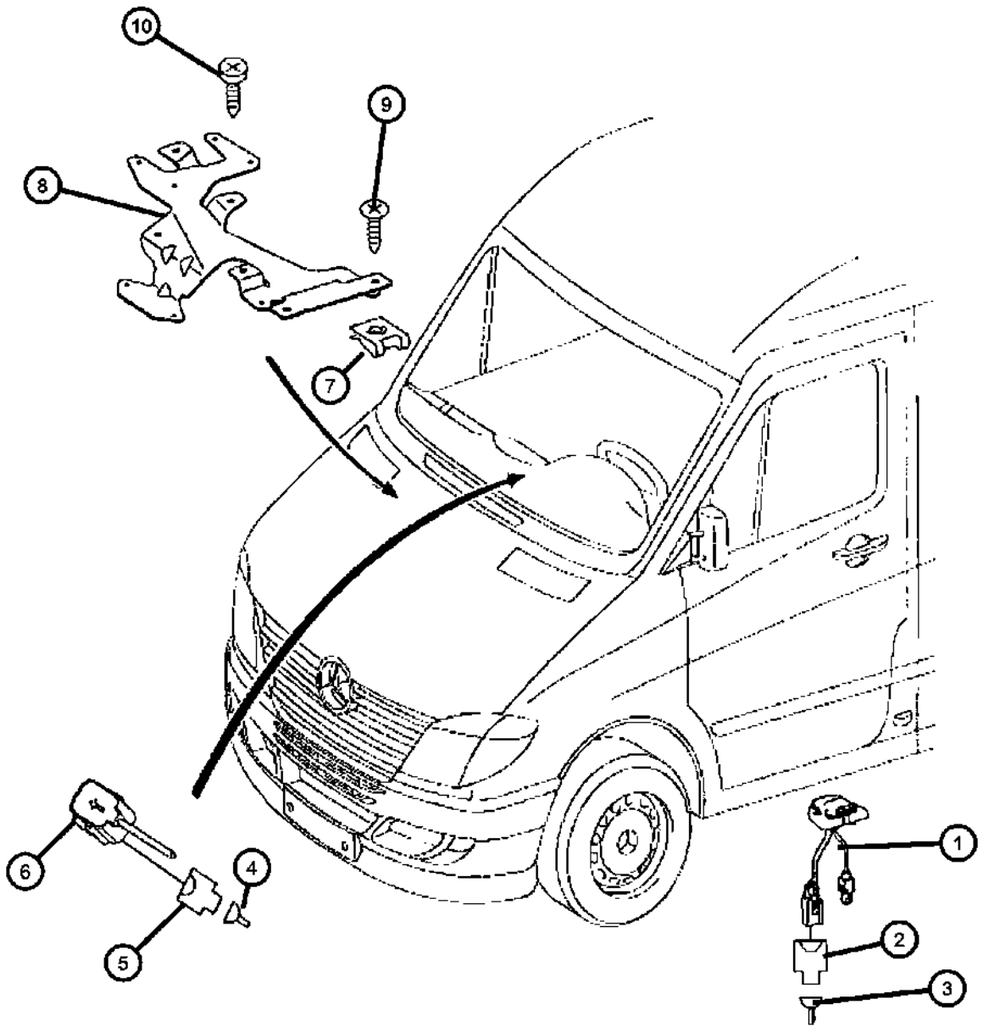

ITEM	PART NUMBER	QTY	LINE	SERIES	BODY	ENGINE	TRANS	TRIM	DESCRIPTION
1									PLATE, Intermediate
	68010539AA	1	3, 7	L	03, 05	EG2, EXM	DGZ		Mobile Phone Pre-Installation
		1	2, 3, 6, 7	L	53, 55, 13, 15, 17	EG2, EXM	DGZ		Mobile Phone Pre-Installation
2	68011378AA	1	7, 2, 3, 6	L		EG2, EXM	DGZ		CONNECTOR, CTEL Bracket 10-PIN;A34/7
3	68016758AA	AR	2, 3, 6, 7	L		EG2, EXM	DGZ		TERMINAL, 0.5 MM2;A34/7
4									TERMINAL
	05103873AA	3	3, 7	L	03, 05	EG2, EXM	DGZ		0.75 MM2 MQS;B25
		3	2, 3, 6, 7	L	13, 15, 17, 53, 55	EG2, EXM	DGZ		0.75 MM2 MQS;B25
5	05101166AA	1	2, 3, 6, 7	L		EG2, EXM	DGZ		CONNECTOR, Microphone Hands-Free System 2-PIN;B25
6	68010540AA	1	6, 7, 2, 3	L		EG2, EXM	DGZ		MICROPHONE, Audio
7									NUT, Spring
	68006573AA	3	3, 7	L	03, 05	EXM, EG2	DGZ		At Bracket
		3	2, 3, 6, 7	L	13, 15, 17, 53, 55	EG2, EXM	DGZ		At Bracket
8									BRACKET
	68010538AA	1	3, 7	L	03, 05	EG2, EXM	DGZ		Control Units
		1	2, 3, 6, 7	L	13, 15, 17, 53, 55	EG2, EXM	DGZ		Control Units
9	06104574AA	3	2, 3, 6, 7	L		EG2, EXM	DGZ		SCREW, Tapping, Bracket Mounting 4.8x16
10	06104566AA	4	2, 3, 6, 7	L	53, 55	EG2, EXM	DGZ		SCREW, Tapping, Plate to Console 4.2x13

SPRINTER (VB)

SERIES	LINE	BODY	ENGINE	TRANSMISSION
L = LOWLINE	3 = HD DODGE 2WD 2 = Med. Duty DODGE 2WD	03 = CAB CHASSIS WHEEL BASE 3 05 = CAB CHASSIS WHEEL BASE 5 13 = 119 WB 53 = 119 WB 15 = VAN WHEEL BASE 5 55 = WAGON WHEEL BASE 5 17 = VAN WHEEL BASE 7	EG2 = 3.5L V6 Gas Engine EXM = 3.0L V6 Turbo Diesel Engine	DGZ = 5-Speed Auto W5A380 Transmission

AR = use ase required - = Non illustrrated part

<< RETURN TO GROUP INDEX

Group - 9

Engine Mounting

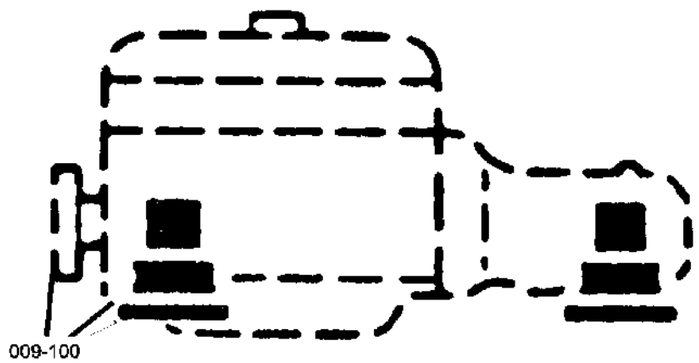

009-100 Engine Mounting 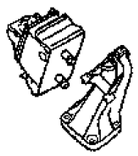			

Group - 9 Engine Mounting

Illustration Title — Group-Fig. No.

Engine Mounting

Engine Mount And Bracket ..... Fig. 9 - 110
Engine Mount And Bracket ..... Fig. 9 - 120
Transmission Mount And Bracket ..... Fig. 9 - 130

Engine Mount And Bracket
Figure 9-110

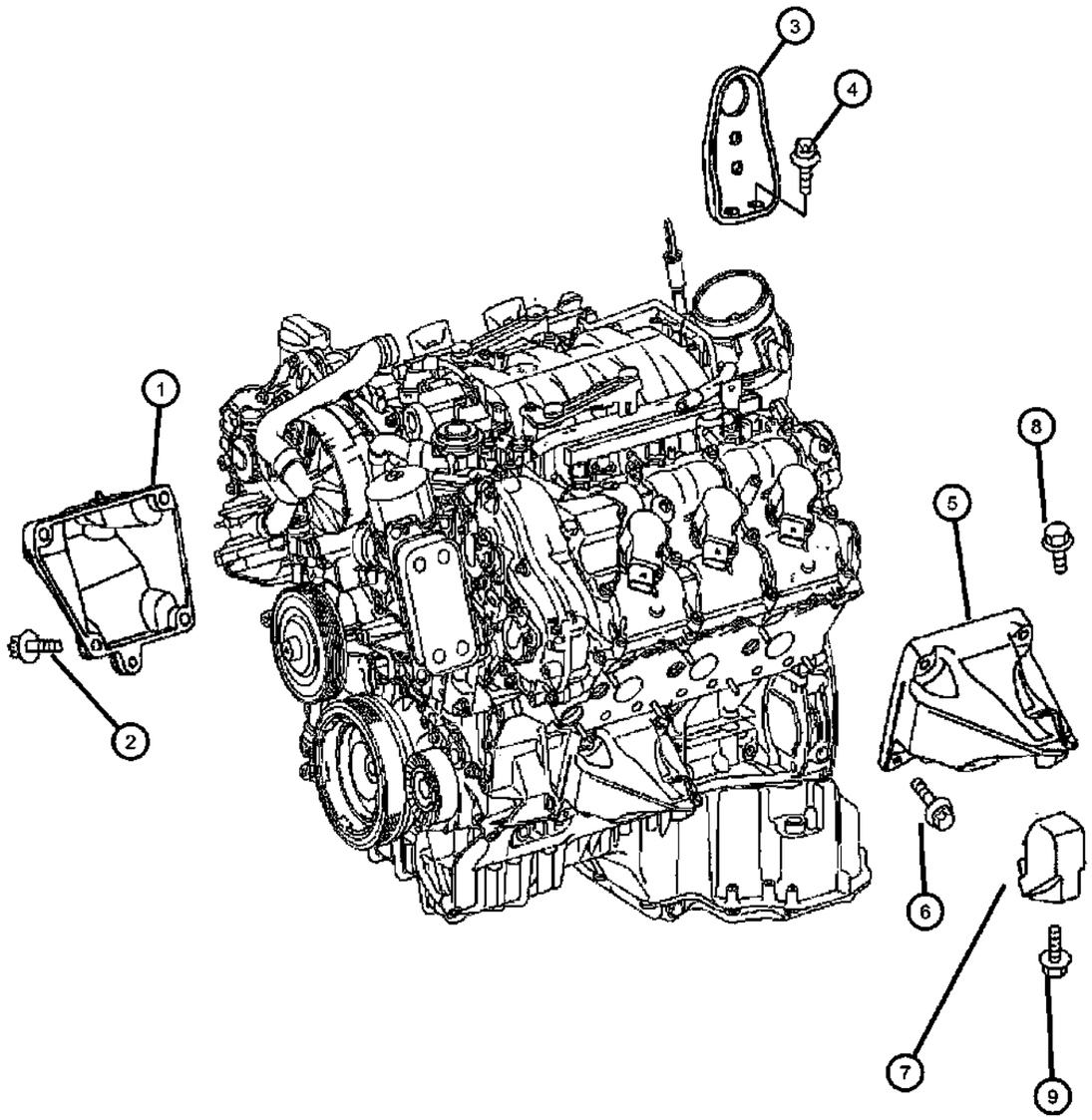

ITEM	PART NUMBER	QTY	LINE	SERIES	BODY	ENGINE	TRANS	TRIM	DESCRIPTION
NOTE:									
Sales Code:									
[DGZ]=5 Speed Automatic Transmission [W5A380]									
[EG2]=3.5L V-6 Gas Engine [Mercedes Benz]									
1									SUPPORT, Engine
	68013869AA	1	2, 6			EG2	DGZ		Right
		1	3, 7			EG2	DGZ		Right
2	05096986AA	4	2, 3, 6, 7			EG2	DGZ		BOLT
3	68013870AA	2	2, 3, 6, 7			EG2	DGZ		EYE, Tow
4	68013871AA	4	2, 3, 6, 7			EG2	DGZ		SCREW
5									SUPPORT, Engine
	68013868AA	1	2, 6			EG2	DGZ		Left
		1	3, 7			EG2	DGZ		Left
6	05096986AA	4	2, 3, 6, 7			EG2	DGZ		BOLT
7	68005194AA	2	2, 3, 6, 7			EG2	DGZ		BRACKET AND INSULATOR, Engine MountingRight & Left
8	06104041AA	2	2, 3, 6, 7			EG2, EXM	DGZ		SCREW, [M10x16], Right And Left, Lower
9	06104223AA	2	3, 7			EG2, EXM	DGZ		BOLT, [M10x65], Right & Left, Upper

SPRINTER (VB)

SERIES	LINE	BODY	ENGINE	TRANSMISSION
L = LOWLINE	3 = HD DODGE 2WD 2 = Med. Duty DODGE 2WD	03 = CAB CHASSIS WHEEL BASE 3 05 = CAB CHASSIS WHEEL BASE 5 13 = 119 WB 53 = 119 WB 15 = VAN WHEEL BASE 5 55 = WAGON WHEEL BASE 5 17 = VAN WHEEL BASE 7	EG2 = 3.5L V6 Gas Engine EXM = 3.0L V6 Turbo Diesel Engine	DGZ = 5-Speed Auto W5A380 Transmission

Engine Mount And Bracket
Figure 9-120

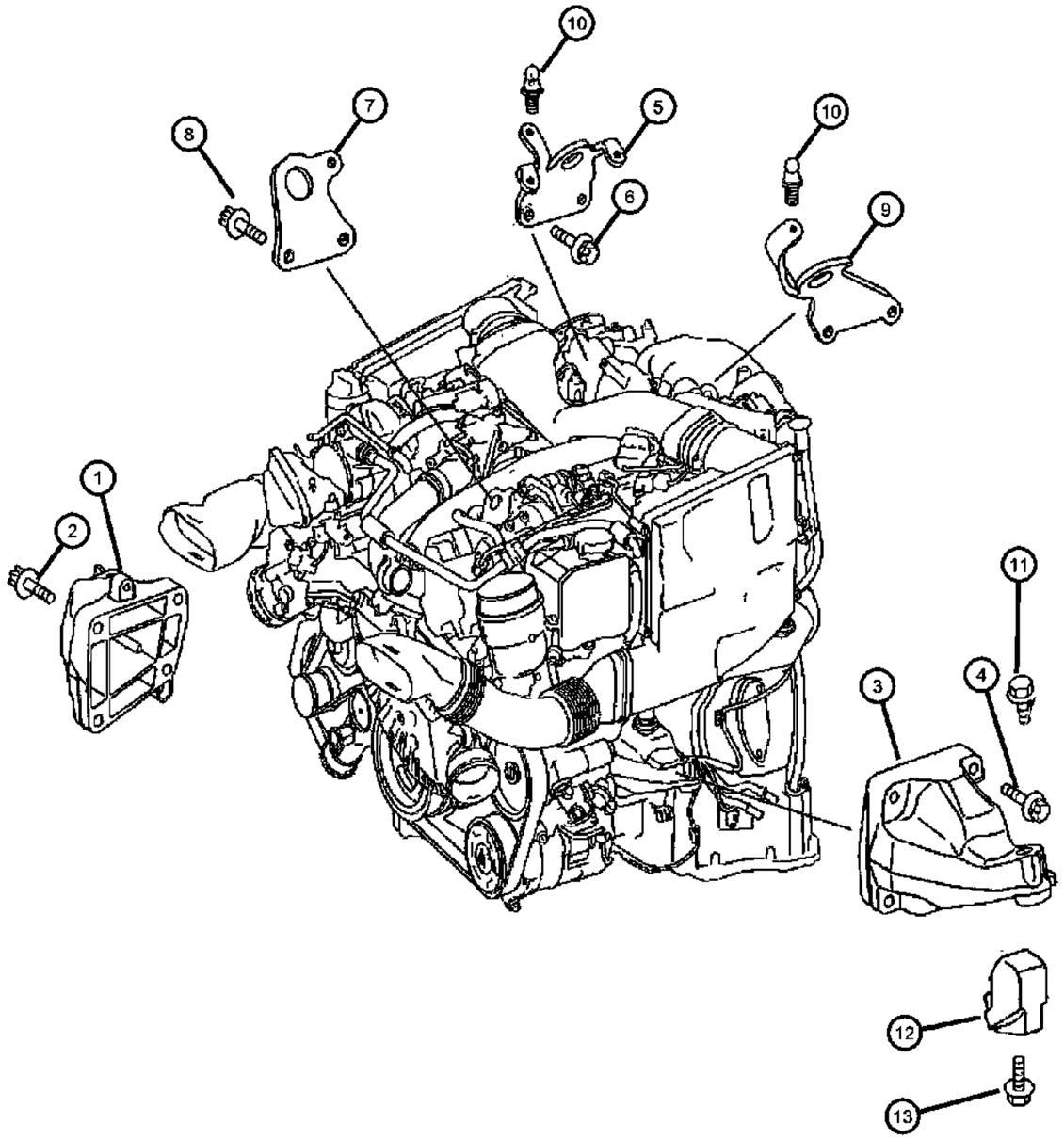

ITEM	PART NUMBER	QTY	LINE	SERIES	BODY	ENGINE	TRANS	TRIM	DESCRIPTION

NOTES:
Sales Code:
[DGZ]=5 Speed Automatic Transmission [W5A380]
[EXM] = 3.0L V6 Turbo Diesel Engine

1	68006041AA	1	2, 3, 6, 7			EXM	DGZ		SUPPORT, Engine
2	06104028AA	1	2, 3, 6, 7			EXM	DGZ		SCREW, [M8x42]
3	68006050AA	1	2, 3, 6, 7			EXM	DGZ		SUPPORT, Engine
4	06104028AA	1	2, 3, 6, 7			EXM	DGZ		SCREW, [M8x45]
5	68006052AA	1	2, 3, 6, 7			EXM	DGZ		RING
6	05073701AA	2	2, 3, 6, 7			EXM	DGZ		SCREW, [M7x20]
7	68006053AA	1	2, 3, 6, 7			EXM	DGZ		RING
8	05073701AA	2	2, 3, 6, 7			EXM	DGZ		SCREW, [M7x20]
9	68003536AA	1	2, 3, 6, 7			EXM	DGZ		BRACKET, Engine Lift
10	05179385AA	6	2, 3, 6, 7			EXM	DGZ		PIN, Locating, Engine Cover
11	06104041AA	2	2, 3, 6, 7			EG2, EXM	DGZ		SCREW, [M10x16], Right or Left, Lower
12	68005193AA	2	2, 3, 6, 7			EXM	DGZ		BRACKET AND INSULATOR, Engine MountingRight & Left
13	06104223AA	2	2, 3, 6, 7			EG2, EXM	DGZ		BOLT, [M10x65], Right or Left, Upper

SPRINTER (VB)

SERIES	LINE	BODY	ENGINE	TRANSMISSION
L = LOWLINE	3 = HD DODGE 2WD 2 = Med. Duty DODGE 2WD	03 = CAB CHASSIS WHEEL BASE 3 05 = CAB CHASSIS WHEEL BASE 5 13 = 119 WB 53 = 119 WB 15 = VAN WHEEL BASE 5 55 = WAGON WHEEL BASE 5 17 = VAN WHEEL BASE 7	EG2 = 3.5L V6 Gas Engine EXM = 3.0L V6 Turbo Diesel Engine	DGZ = 5-Speed Auto W5A380 Transmission

Transmission Mount And Bracket
Figure 9-130

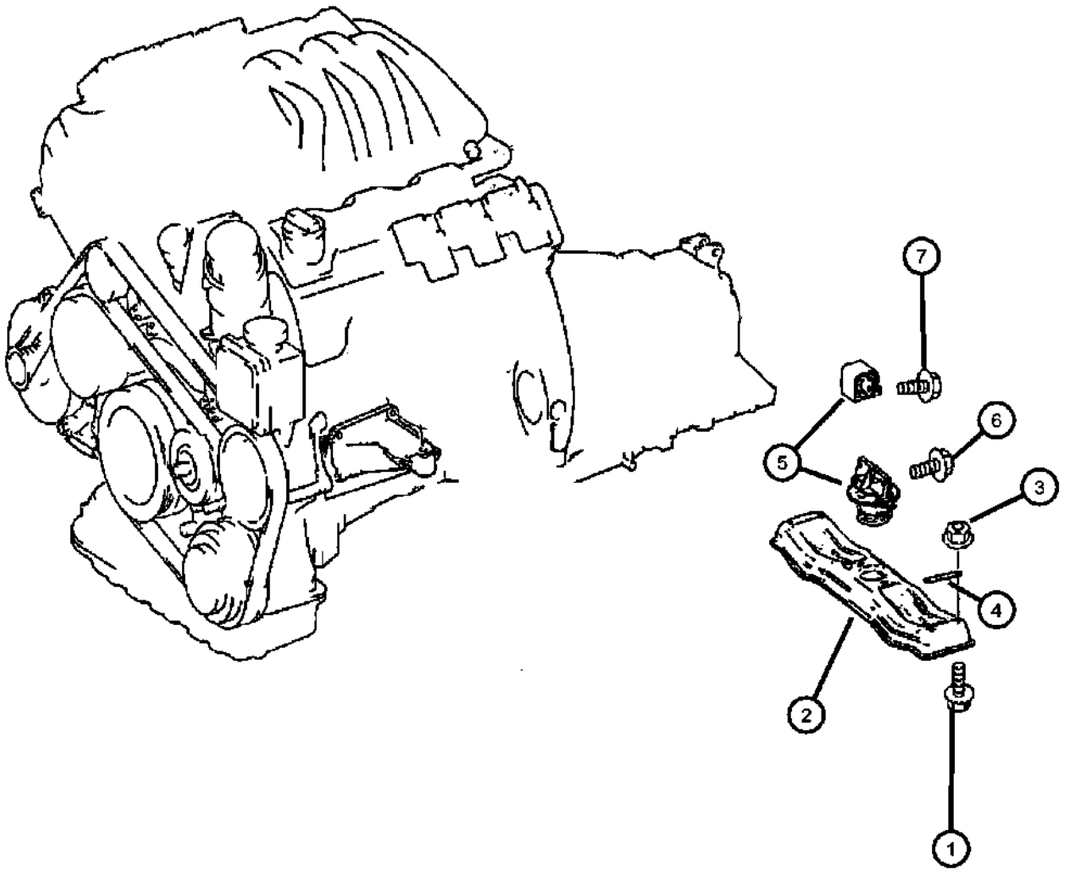

ITEM	PART NUMBER	QTY	LINE	SERIES	BODY	ENGINE	TRANS	TRIM	DESCRIPTION
1	06104222AA	4	2, 3, 6, 7			EG2, EXM	DGZ		BOLT, Hex Flange Head, [M10x60]
2									SUPPORT
	68013724AA	1	3, 7			EG2, EXM	DGZ		
	68013734AA	1	2, 6			EG2, EXM	DGZ		
3	06105170AA	2	2, 3, 6, 7			EG2, EXM	DGZ		NUT
4	68013726AA	2	2, 3, 6, 7			EG2, EXM	DGZ		REINFORCEMENT, Bolt Support Brace
5									RUBBER, RUBBER-MOUNT
	68013684AA	1	3, 7			EG2, EXM	DGZ		
	68013685AA	1	2, 6			EG2, EXM	DGZ		
6	05097692AA	4	2, 6			EG2, EXM	DGZ		SCREW, M8x20, [M8x20]
7									BOLT
	06104215AA	2	3, 7			EG2, EXM	DGZ		[M10x25]
		2	2, 3, 6, 7			EG2, EXM	DGZ		[M10x25]

SPRINTER (VB)

SERIES	LINE	BODY	ENGINE	TRANSMISSION
L = LOWLINE	3 = HD DODGE 2WD 2 = Med. Duty DODGE 2WD	03 = CAB CHASSIS WHEEL BASE 3 05 = CAB CHASSIS WHEEL BASE 5 13 = 119 WB 53 = 119 WB 15 = VAN WHEEL BASE 5 55 = WAGON WHEEL BASE 5 17 = VAN WHEEL BASE 7	EG2 = 3.5L V6 Gas Engine EXM = 3.0L V6 Turbo Diesel Engine	DGZ = 5-Speed Auto W5A380 Transmission

Group - 3.5L

Engine 3.5L Six Cylinder

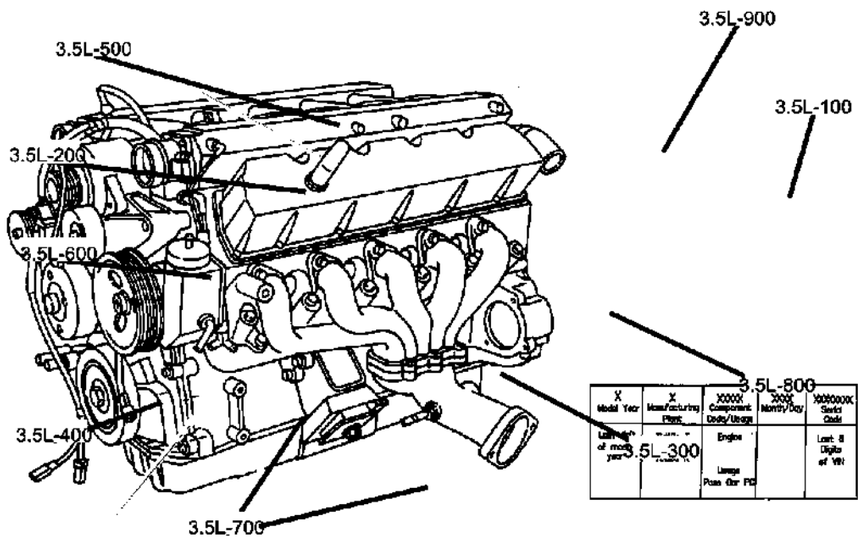

3.5L-100
Engine Identification

X Model Year	X Manufacturing Plant	XXXXX Component Code/Usage	XXXX Month/Day	XXXXXXXX Serial Code
Last digit of model year	Saltillo S Trenton T Toluca K	Engine 3.3L - 3.8L Usage Pass Car PC Truck T		Last 8 Digits of VIN

3.5L-200
Cylinder Head

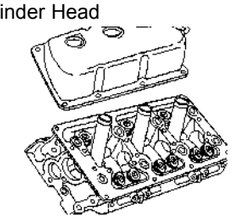

3.5L-300
Cylinder Block

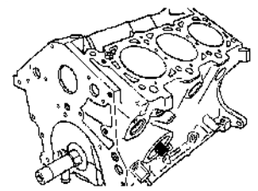

3.5L-400
Crankshaft, Piston and Driveplate

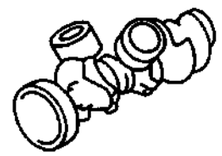

3.5L-500
Camshafts & Valves

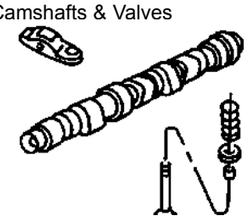

3.5L-600
Timing Belt and Cover

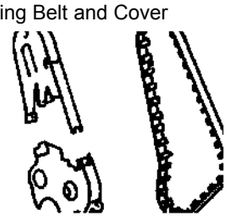

3.5L-700
Engine Oiling

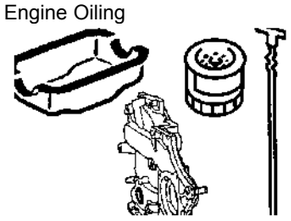

3.5L-800
Manifolds

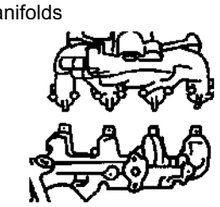

3.5L-900
Crankcase Ventilation

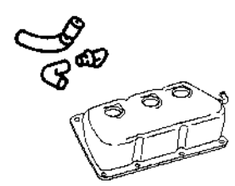

Group - 3.5L Engine 3.5L Six Cylinder

Illustration Title — Group-Fig. No.

Engine Identification
Engine Identification & Engine Assembly ..... Fig. 3.5L - 110

Cylinder Head
Cylinder Head ..... Fig. 3.5L - 210

Cylinder Block
Cylinder Block ..... Fig. 3.5L - 310

Crankshaft, Piston and Driveplate
Crankshaft & Bearings ..... Fig. 3.5L - 410
Piston & Connecting Rod ..... Fig. 3.5L - 420
Balance Shaft ..... Fig. 3.5L - 430

Camshafts & Valves
Camshaft & Camshaft Gears ..... Fig. 3.5L - 510
Intake & Exhaust Valves ..... Fig. 3.5L - 520
Timing Chain & Adjuster ..... Fig. 3.5L - 530
Timing Case ..... Fig. 3.5L - 540

Timing Belt and Cover
Timing Chain & Adjuster ..... Fig. 3.5L - 610

Engine Oiling
Oil Pump ..... Fig. 3.5L - 710
Engine Oil Pan & Engine Oil Level Indicator [EG2] ..... Fig. 3.5L - 720
Oil Filter & Oil Cooler ..... Fig. 3.5L - 730

Manifolds
Intake Manifold ..... Fig. 3.5L - 810
Exhaust Manifold ..... Fig. 3.5L - 820

Crankcase Ventilation
Engine Ventilation ..... Fig. 3.5L - 910

Engine Identification & Engine Assembly
Figure 3.5L-110

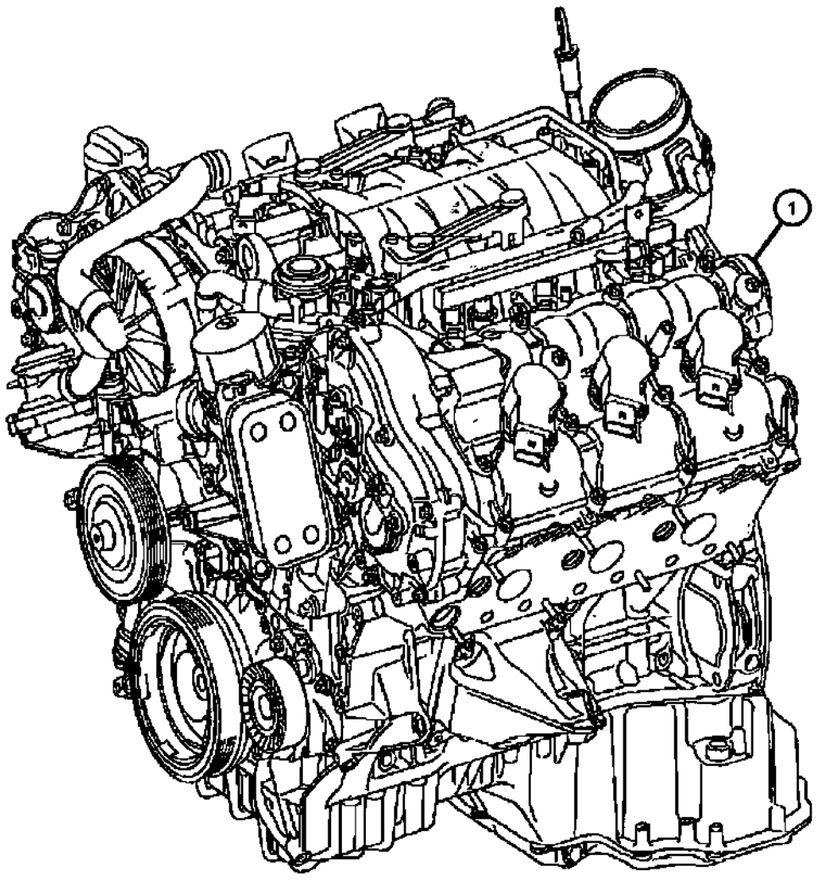

ITEM	PART NUMBER	QTY	LINE	SERIES	BODY	ENGINE	TRANS	TRIM	DESCRIPTION
NOTE:"The New Replacement Engine Will Have A Different Upper, Lower Oil Pan And Vibration Damper. These Parts Must Be Removed From Th									
Sales Codes:									
[DGZ]=5 Speed Automatic Transmission [W5A380]									
[EG2]=3.5L V-6 Gas Engine - [Mercedes Benz]									
1	68013133AA	1	2, 3, 6, 7			EG2	DGZ		ENGINE, Complete, See Note

SPRINTER (VB)

SERIES	LINE	BODY	ENGINE	TRANSMISSION
L = LOWLINE	3 = HD DODGE 2WD 2 = Med. Duty DODGE 2WD	03 = CAB CHASSIS WHEEL BASE 3 05 = CAB CHASSIS WHEEL BASE 5 13 = 119 WB 53 = 119 WB 15 = VAN WHEEL BASE 5 55 = WAGON WHEEL BASE 5 17 = VAN WHEEL BASE 7	EG2 = 3.5L V6 Gas Engine EXM = 3.0L V6 Turbo Diesel Engine	DGZ = 5-Speed Auto W5A380 Transmission

Cylinder Head
Figure 3.5L-210

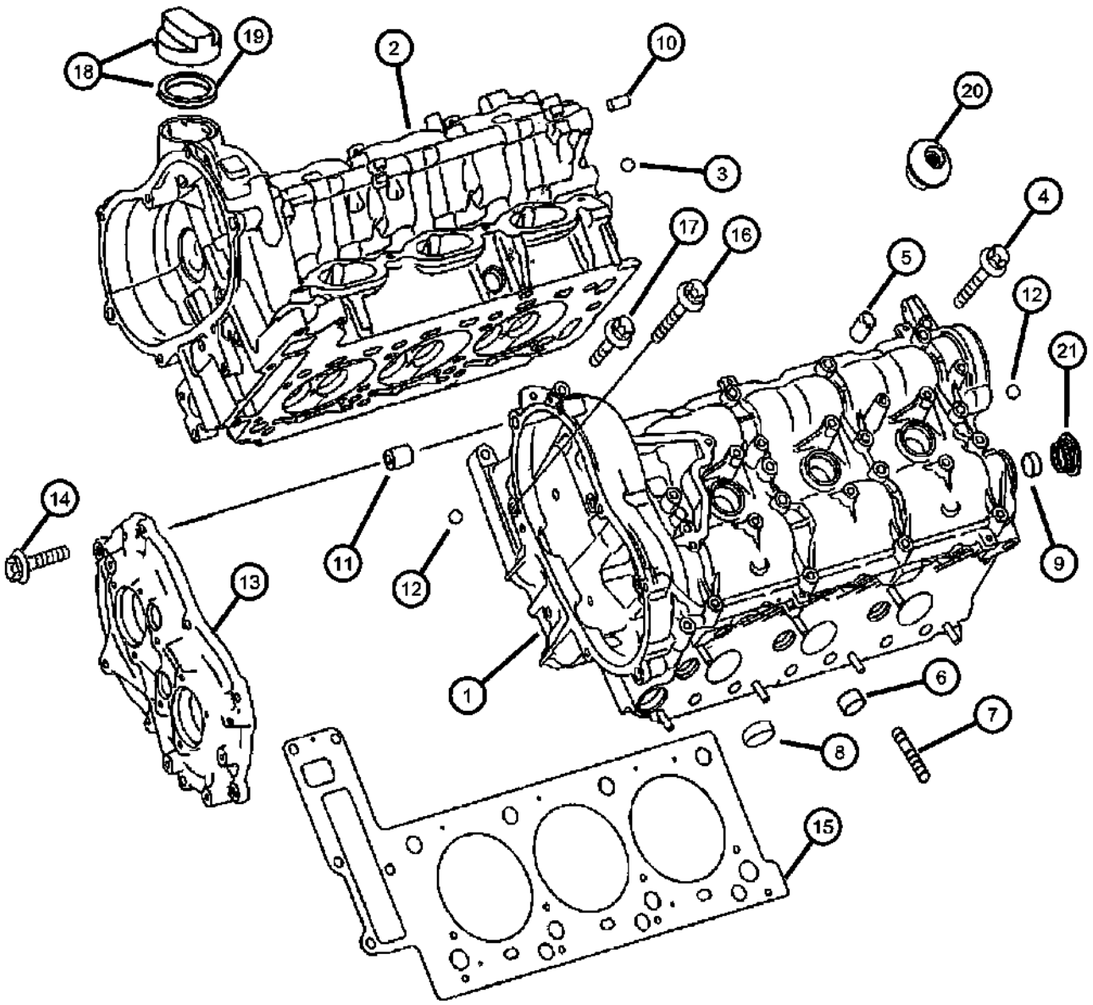

ITEM	PART NUMBER	QTY	LINE	SERIES	BODY	ENGINE	TRANS	TRIM	DESCRIPTION
NOTE:									
Sales Codes:									
[DGZ]=5 Speed Automatic Transmission [W5A380]									
[EG2]=3.5L V-6 Gas Engine - [Mercedes Benz]									
1	68005676AA	1	2, 3, 6, 7			EG2	DGZ		HEAD, Cylinder, Left
2	68005627AA	1	2, 3, 6, 7			EG2	DGZ		HEAD, Cylinder, Right
3	05080045AA	1	2, 3, 6, 7			EG2	DGZ		BALL
4	05073688AB	18	2, 3, 6, 7			EG2	DGZ		BOLT, [M7x40], Right & Left
5	68005643AA	2	2, 3, 6, 7			EG2	DGZ		PIN, Dowel, Valve Cover To Cylinder Head, Right & Left
6	05098815AA	8	2, 3, 6, 7			EG2	DGZ		PLUG, Coolant Core Plug
7	05099276AA	7	2, 3, 6, 7			EG2	DGZ		STUD, Exhaust Manifold To Head, Right & Left
8	05098818AA	1	2, 3, 6, 7			EG2	DGZ		PLUG, Expansion
9	05098815AA	2	2, 3, 6, 7			EG2	DGZ		PLUG
10	68005645AA	2	2, 3, 6, 7			EG2	DGZ		PIN, Dowel
11	05097092AA	2	2, 3, 6, 7			EG2	DGZ		PIN, Dowel
12	05080045AA	2	2, 3, 6, 7			EG2	DGZ		BALL, Oil Duct & Timing Chain Cover
13									COVER, Timing Belt
	68005647AA	1	2, 3, 6, 7			EG2	DGZ		Left
	68005682AA	1	2, 3, 6, 7			EG2	DGZ		Right
14	06104008AA	7	2, 3, 6, 7			EG2	DGZ		SCREW
15									GASKET, Cylinder Head, Left
	68005671AA	1	2, 3, 6, 7			EG2	DGZ		Right
	68005687AA	1	2, 3, 6, 7			EG2	DGZ		Left
16	68005672AA	8	2, 3, 6, 7			EG2	DGZ		BOLT, Cylinder Head To Block
17	68005673AA	2	2, 3, 6, 7			EG2	DGZ		SCREW
18	05175447AA	1	2, 3, 6, 7			EG2	DGZ		CAP, Oil Filler
19	05080088AA	1	2, 3, 6, 7			EG2	DGZ		SEAL, Oil Fill Cap
20	05101527AA	4	2, 3, 6, 7			EG2	DGZ		GROMMET
21	68005669AA	2	2, 3, 6, 7			EG2	DGZ		PLUG, Expansion

SPRINTER (VB)

SERIES	LINE	BODY	ENGINE	TRANSMISSION
L = LOWLINE	3 = HD DODGE 2WD 2 = Med. Duty DODGE 2WD	03 = CAB CHASSIS WHEEL BASE 3 05 = CAB CHASSIS WHEEL BASE 5 13 = 119 WB 53 = 119 WB 15 = VAN WHEEL BASE 5 55 = WAGON WHEEL BASE 5 17 = VAN WHEEL BASE 7	EG2 = 3.5L V6 Gas Engine EXM = 3.0L V6 Turbo Diesel Engine	DGZ = 5-Speed Auto W5A380 Transmission

Cylinder Block
Figure 3.5L-310

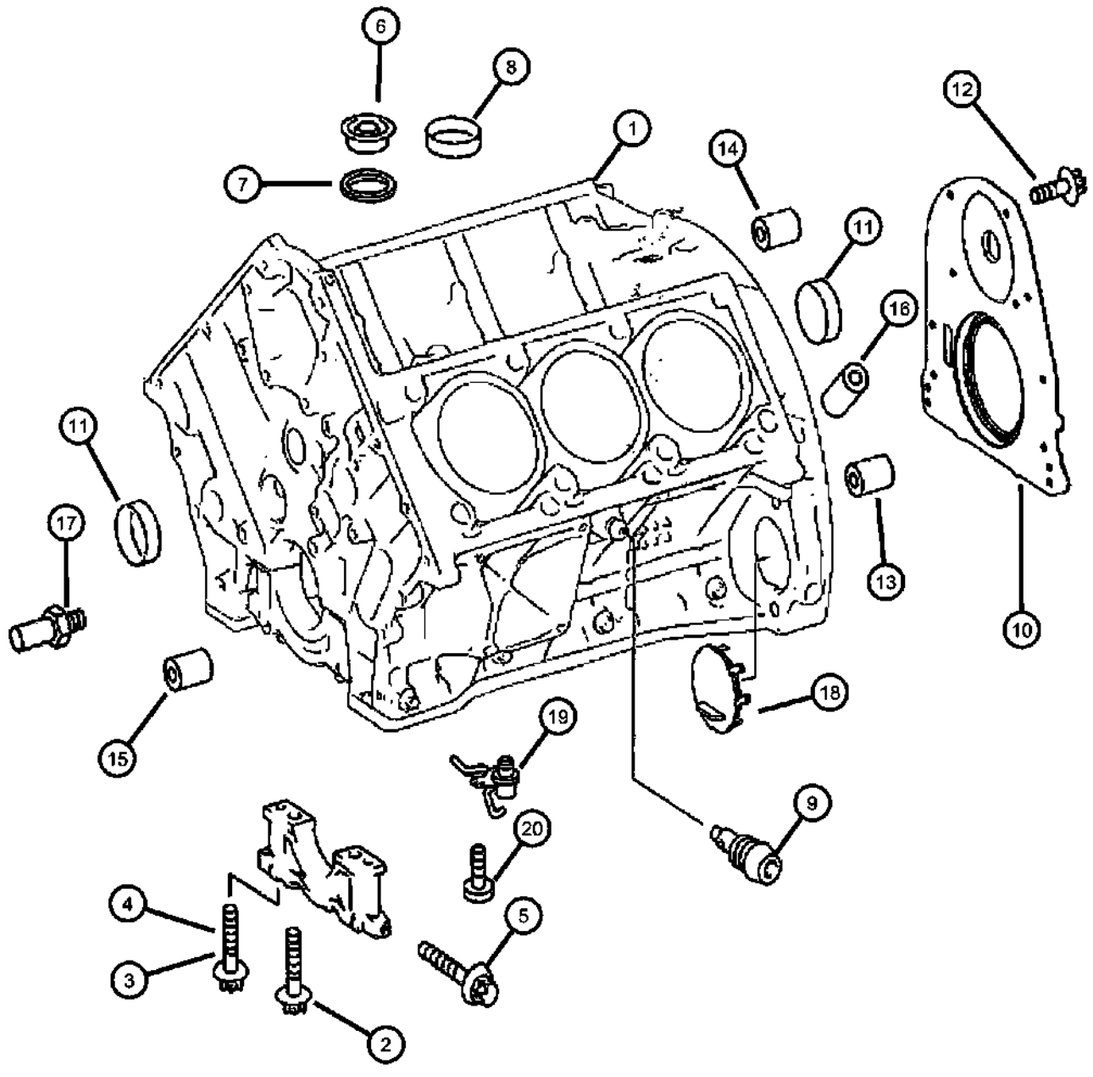

ITEM	PART NUMBER	QTY	LINE	SERIES	BODY	ENGINE	TRANS	TRIM	DESCRIPTION

NOTE:If Engine Block Is Damage Or Short Block Is Needed, Complete Engine Must Be Ordered. Short Block Is Not Serviced.
Sales Codes:
[DGZ]=5 Speed Automatic Transmission [W5A380]
[EG2]=3.5L V-6 Gas Engine - [Mercedes Benz]

1	68005669AA	2							BLOCK, Engine Cylinder, See Note, (NOT SERVICED)
2	05096962AA	8	2, 3, 6, 7			EG2	DGZ		BOLT, Main Bearing Cap, [M10X90 - 8.8]
3	05096961AA	8	2, 3, 6, 7			EG2	DGZ		BOLT, Main Bearing Cap, [M8X75 - 8.8]
4	05098813AA	6	2, 3, 6, 7			EG2	DGZ		BOLT, [M8X40 - 10.9]
5	68005187AA	2	2, 3, 6, 7			EG2	DGZ		BOLT, [M8X70 -10.9]
6	05073837AA	1	2, 3, 6, 7			EG2	DGZ		PLUG, Screw, Cylinder Block
7	05101157AA	1	2, 3, 6, 7			EG2	DGZ		O RING
8	05073860AA	2	2, 3, 6, 7			EG2	DGZ		PLUG, Expansion, Expansion Plug To Oil Passage
9	05097164AA	2	2, 3, 6, 7			EG2	DGZ		PLUG, Drain, Coolant Drain Plug In Block
10	68013857AA	1	2, 3, 6, 7			EG2	DGZ		RETAINER, Crankshaft Rear Oil Seal
11	05098815AA	2	2, 3, 6, 7			EG2	DGZ		PLUG, Rear Block Expansion Plug
12	06104075AA	11	2, 3, 6, 7			EG2	DGZ		BOLT, Cover To Block [M6x12]
13	05099279AA	2	2, 3, 6, 7			EG2	DGZ		DOWEL PIN
14	05097167AA	2	2, 3, 6, 7			EG2	DGZ		DOWEL PIN
15	05097092AA	2	2, 3, 6, 7			EG2	DGZ		PIN, Dowel
16	05097166AA	4	2, 3, 6, 7			EG2	DGZ		PIN, Dowel
17	05098422AA	4	2, 3, 6, 7			EG2	DGZ		PIN, Belt Tensioner
18	68013692AA	1	2, 3, 6, 7			EG2	DGZ		COVER
19	68013867AA	3	2, 3, 6, 7			EG2	DGZ		JET, Piston Oil Cooler
20	68006033AA	3	2, 3, 6, 7			EG2	DGZ		BOLT, [M6x16.5MM]

SPRINTER (VB)

SERIES	LINE	BODY	ENGINE	TRANSMISSION
L = LOWLINE	3 = HD DODGE 2WD 2 = Med. Duty DODGE 2WD	03 = CAB CHASSIS WHEEL BASE 3 05 = CAB CHASSIS WHEEL BASE 5 13 = 119 WB 53 = 119 WB 15 = VAN WHEEL BASE 5 55 = WAGON WHEEL BASE 5 17 = VAN WHEEL BASE 7	EG2 = 3.5L V6 Gas Engine EXM = 3.0L V6 Turbo Diesel Engine	DGZ = 5-Speed Auto W5A380 Transmission

Crankshaft & Bearings
Figure 3.5L-410

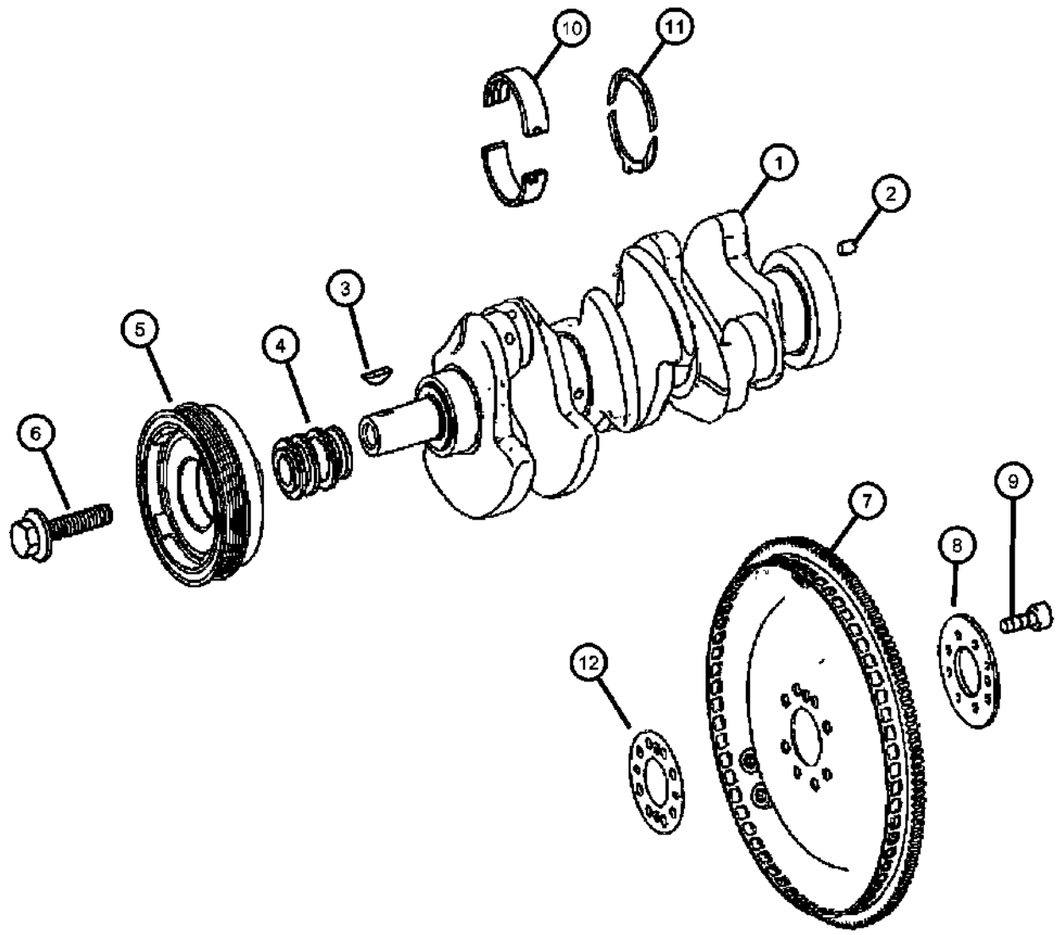

ITEM	PART NUMBER	QTY	LINE	SERIES	BODY	ENGINE	TRANS	TRIM	DESCRIPTION
NOTE:Bearings Only Serviced By Color, Standard Size Only. Please Refer To Service Manual For Additional Information. If Crankshaft Is Damage									
Sales Codes:									
[DGZ]=5 Speed Automatic Transmission [W5A380]									
[EG2]=3.5L V-6 Gas Engine - [Mercedes Benz]									
1	68005554AA	1	2, 3, 6, 7			EG2	DGZ		CRANKSHAFT
2	05080024AA	1	2, 3, 6, 7			EG2	DGZ		DOWEL PIN
3	05101484AA	1	2, 3, 6, 7			EG2	DGZ		KEY, Woodruff
4	68005557AA	1	2, 3, 6, 7			EG2	DGZ		SPROCKET, Crankshaft
5	68005278AA	1	2, 3, 6, 7			EG2	DGZ		DAMPER, Crankshaft
6	05098411AA	1	2, 3, 6, 7			EG2	DGZ		BOLT, Hex Head
7	68005618AA	1	2, 3, 6, 7			EG2	DGZ		FLEX PLATE
8	05139838AA	1	2, 3, 6, 7			EG2	DGZ		PLATE, Flexplate Backing
9	05159260AA	8	2, 3, 6, 7			EG2	DGZ		SCREW, [10x1x18.5]
10									BEARING, Crankshaft
	04862608AA	3	2, 3, 6, 7			EG2	DGZ		Color [Blue]
	04862609AA	3	2, 3, 6, 7			EG2	DGZ		Color [Yellow]
	04862610AA	3	2, 3, 6, 7			EG2	DGZ		Color [Red]
11									THRUST BEARING
	68005567AA	2	2, 3, 6, 7			EG2	DGZ		Upper
	68005569AA	2	2, 3, 6, 7			EG2	DGZ		Lower
12	68005616AA	1	2, 3, 6, 7			EG2	DGZ		PLATE, Flexplate Backing

SPRINTER (VB)

SERIES	LINE	BODY	ENGINE	TRANSMISSION
L = LOWLINE	3 = HD DODGE 2WD 2 = Med. Duty DODGE 2WD	03 = CAB CHASSIS WHEEL BASE 3 05 = CAB CHASSIS WHEEL BASE 5 13 = 119 WB 53 = 119 WB 15 = VAN WHEEL BASE 5 55 = WAGON WHEEL BASE 5 17 = VAN WHEEL BASE 7	EG2 = 3.5L V6 Gas Engine EXM = 3.0L V6 Turbo Diesel Engine	DGZ = 5-Speed Auto W5A380 Transmission

Piston & Connecting Rod
Figure 3.5L-420

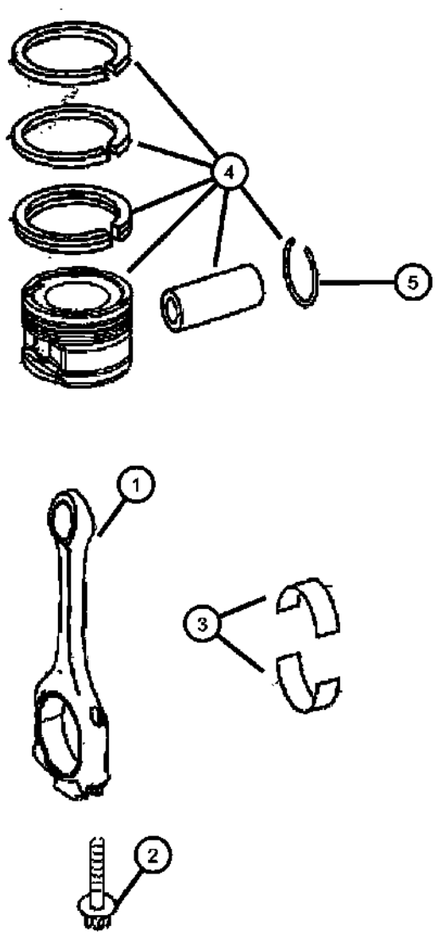

ITEM	PART NUMBER	QTY	LINE	SERIES	BODY	ENGINE	TRANS	TRIM	DESCRIPTION
NOTE:Piston & Rings Are Only Serviced Standard Size. Size Listed In Catalog. If Cylinder Bore Is Larger Than Size Listed For Pistons Service Pa									
Sales Codes:									
[DGZ]=5 Speed Automatic Transmission [W5A380]									
[EG2]=3.5L V-6 Gas Engine - [Mercedes Benz]									
1	68005585AA	6	2, 3, 6, 7			EG2	DGZ		ROD, Connecting
2	68005588AA	12	2, 3, 6, 7			EG2	DGZ		BOLT, Connecting Rod
3	68005594AA	6	2, 3, 6, 7			EG2	DGZ		BEARING KIT, Connecting Rod
4									PISTON, See Note:
	68005595AA	6	2, 3, 6, 7			EG2	DGZ		Cylinder Bore Size [92.9 MM]
	68028234AA	6	2, 3, 6, 7			EG2	DGZ		Cylinder Bore Size [93.0 MM]
5	05098880AA	3	2, 3, 6, 7			EG2	DGZ		RING

SPRINTER (VB)

SERIES	LINE	BODY	ENGINE	TRANSMISSION
L = LOWLINE	3 = HD DODGE 2WD 2 = Med. Duty DODGE 2WD	03 = CAB CHASSIS WHEEL BASE 3 05 = CAB CHASSIS WHEEL BASE 5 13 = 119 WB 53 = 119 WB 15 = VAN WHEEL BASE 5 55 = WAGON WHEEL BASE 5 17 = VAN WHEEL BASE 7	EG2 = 3.5L V6 Gas Engine EXM = 3.0L V6 Turbo Diesel Engine	DGZ = 5-Speed Auto W5A380 Transmission

Balance Shaft
Figure 3.5L-430

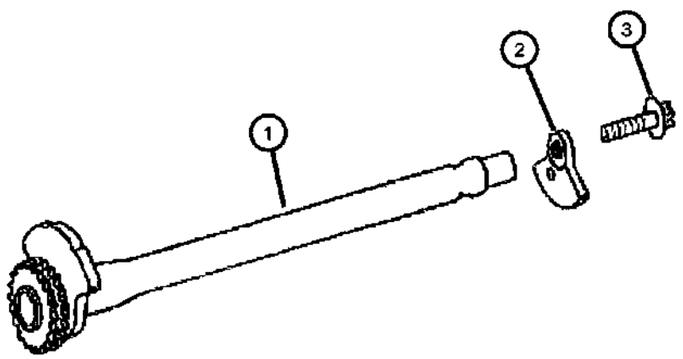

ITEM	PART NUMBER	QTY	LINE	SERIES	BODY	ENGINE	TRANS	TRIM	DESCRIPTION

NOTE:
Sales Codes:
[DGZ]=5 Speed Automatic Transmission [W5A380]
[EG2]=3.5L V-6 Gas Engine - [Mercedes Benz]

	1	68005572AA	1	2, 3, 6, 7			EG2	DGZ	SHAFT, Balance
	2	68005580AA	1	2, 3, 6, 7			EG2	DGZ	COUNTERWEIGHT, Balance shaft
	3	68005581AA	1	2, 3, 6, 7			EG2	DGZ	SCREW

SPRINTER (VB)

SERIES	LINE	BODY	ENGINE	TRANSMISSION
L = LOWLINE	3 = HD DODGE 2WD 2 = Med. Duty DODGE 2WD	03 = CAB CHASSIS WHEEL BASE 3 05 = CAB CHASSIS WHEEL BASE 5 13 = 119 WB 53 = 119 WB 15 = VAN WHEEL BASE 5 55 = WAGON WHEEL BASE 5 17 = VAN WHEEL BASE 7	EG2 = 3.5L V6 Gas Engine EXM = 3.0L V6 Turbo Diesel Engine	DGZ = 5-Speed Auto W5A380 Transmission

Camshaft & Camshaft Gears
Figure 3.5L-510

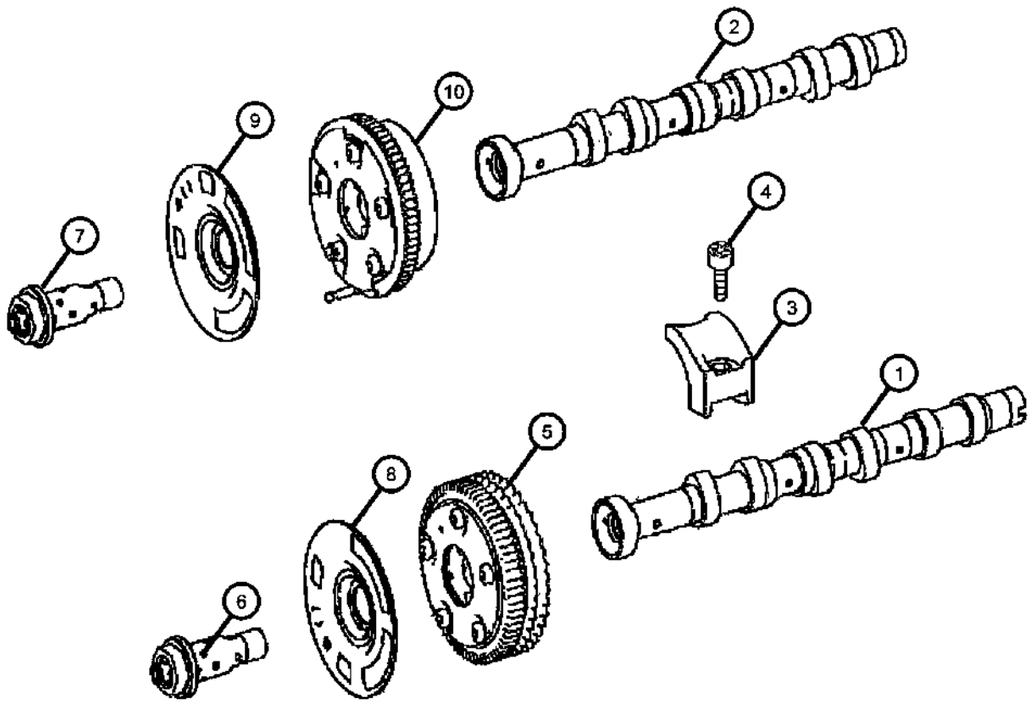

ITEM	PART NUMBER	QTY	LINE	SERIES	BODY	ENGINE	TRANS	TRIM	DESCRIPTION
NOTE:									
Sales Codes:									
[DGZ]=5 Speed Automatic Transmission [W5A380]									
[EG2]=3.5L V-6 Gas Engine - [Mercedes Benz]									
1									CAMSHAFT, Intake
	68005650AA	1	2, 3, 6, 7			EG2	DGZ		Left
	68005683AA	1	2, 3, 6, 7			EG2	DGZ		Right
2									CAMSHAFT, Exhaust
	68005652AA	1	2, 3, 6, 7			EG2	DGZ		Right
	68005685AA	1	2, 3, 6, 7			EG2	DGZ		Left
3	68005654AA	4	2, 3, 6, 7			EG2	DGZ		CAP, Camshaft Bearing
4	05137503AA	2	2, 3, 6, 7			EG2	DGZ		SCREW, [M6x25MM], Right & Left
5									GEAR, Camshaft
	68013890AA	1	2, 3, 6, 7			EG2	DGZ		Intake, Left
	68013899AA	1	2, 3, 6, 7			EG2	DGZ		Intake, Right
6	68013891AA	2	2, 3, 6, 7			EG2	DGZ		VALVEIntake
7	68013895AA	2	2, 3, 6, 7			EG2	DGZ		VALVEExhaust
8									PHASER, Camshaft
	68013900AA	1	2, 3, 6, 7			EG2	DGZ		Intake, Right
	68013892AA	1	2, 3, 6, 7			EG2	DGZ		Intake, Left
9									PHASER, Camshaft
	68013896AA	1	2, 3, 6, 7			EG2	DGZ		Exhaust, Left
	68013901AA	1	2, 3, 6, 7			EG2	DGZ		Exhaust, Right
10	68013893AA	1	2, 3, 6, 7			EG2	DGZ		GEAR, CamshaftExhaust

SPRINTER (VB)

SERIES	LINE	BODY	ENGINE	TRANSMISSION
L = LOWLINE	3 = HD DODGE 2WD 2 = Med. Duty DODGE 2WD	03 = CAB CHASSIS WHEEL BASE 3 05 = CAB CHASSIS WHEEL BASE 5 13 = 119 WB 53 = 119 WB 15 = VAN WHEEL BASE 5 55 = WAGON WHEEL BASE 5 17 = VAN WHEEL BASE 7	EG2 = 3.5L V6 Gas Engine EXM = 3.0L V6 Turbo Diesel Engine	DGZ = 5-Speed Auto W5A380 Transmission

Intake & Exhaust Valves
Figure 3.5L-520

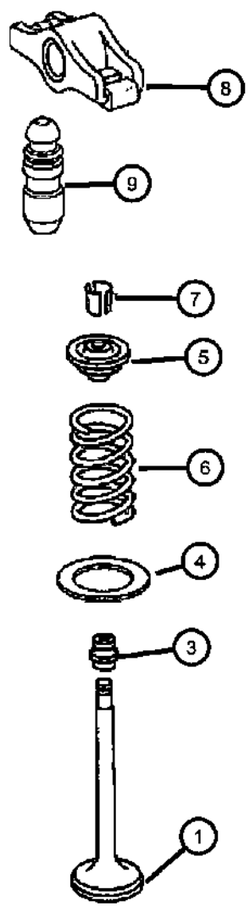

ITEM	PART NUMBER	QTY	LINE	SERIES	BODY	ENGINE	TRANS	TRIM	DESCRIPTION
NOTE: Sales Codes: [DGZ]=5 Speed Automatic Transmission [W5A380] [EG2]=3.5L V-6 Gas Engine - [Mercedes Benz]									
1	68005655AA	6	2, 3, 6, 7			EG2	DGZ		VALVE, Intake, StandardIntake, Right & Left
-2	68005657AA	6	2, 3, 6, 7			EG2	DGZ		VALVE, Exhaust, StandardExhaust, Right & Left
3	05175438AA	6	2, 3, 6, 7			EG2	DGZ		SEAL, Valve GuideIntake And Exhaust
4	68005660AA	12	2, 3, 6, 7			EG2	DGZ		SEAT, Valve Spring
5	68005662AA	12	2, 3, 6, 7			EG2	DGZ		RETAINER, Valve Spring
6	68005663AA	12	2, 3, 6, 7			EG2	DGZ		SPRING, Valve
7	05175399AA	24	2, 3, 6, 7			EG2	DGZ		LOCK, Valve Spring Retainer
8	68005648AA	12	2, 3, 6, 7			EG2	DGZ		ARM, Rocker
9	05175440AA	12	2, 3, 6, 7			EG2	DGZ		ADJUSTER, Valve Lash

SPRINTER (VB)

SERIES	LINE	BODY	ENGINE	TRANSMISSION
L = LOWLINE	3 = HD DODGE 2WD 2 = Med. Duty DODGE 2WD	03 = CAB CHASSIS WHEEL BASE 3 05 = CAB CHASSIS WHEEL BASE 5 13 = 119 WB 53 = 119 WB 15 = VAN WHEEL BASE 5 55 = WAGON WHEEL BASE 5 17 = VAN WHEEL BASE 7	EG2 = 3.5L V6 Gas Engine EXM = 3.0L V6 Turbo Diesel Engine	DGZ = 5-Speed Auto W5A380 Transmission

Timing Chain & Adjuster
Figure 3.5L-530

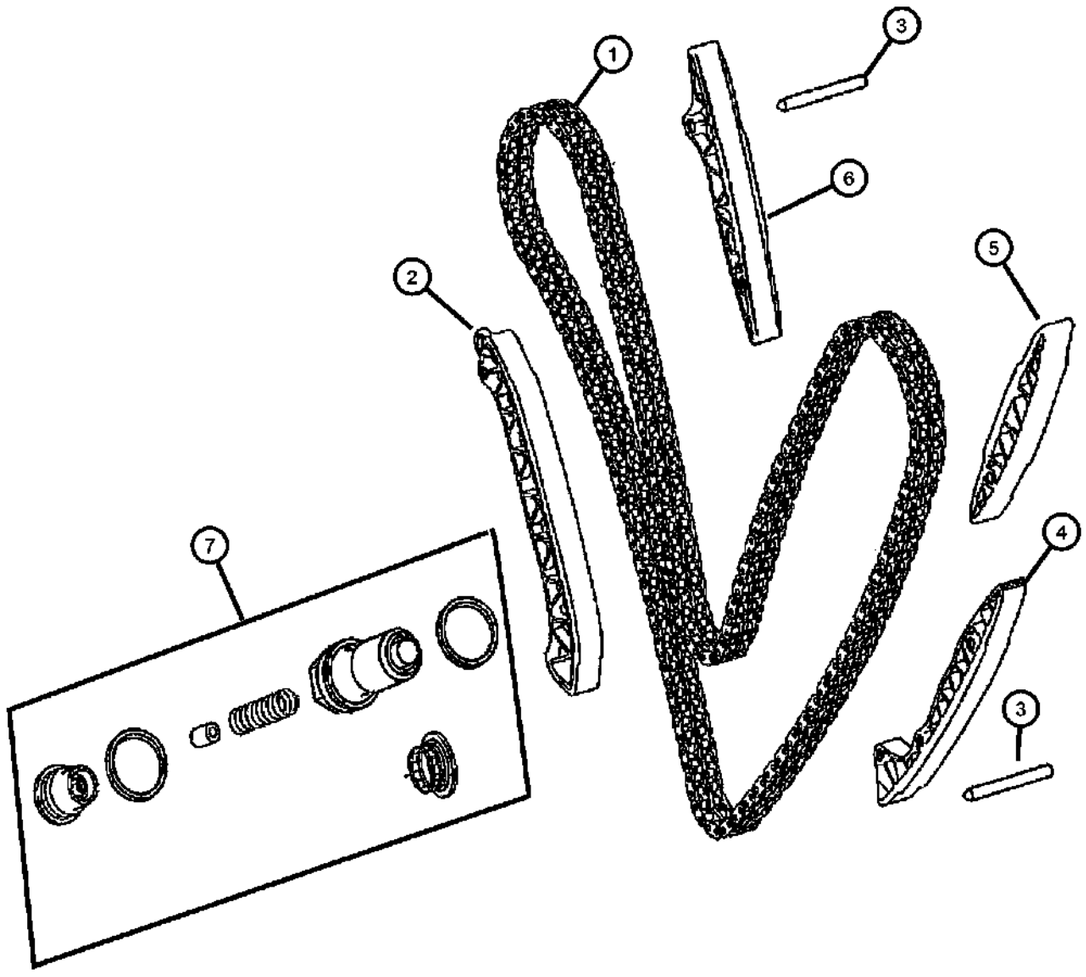

ITEM	PART NUMBER	QTY	LINE	SERIES	BODY	ENGINE	TRANS	TRIM	DESCRIPTION

NOTE:Internal Or Seals Parts ForTensioner Are Not Serviced. Must Replace Tensioner.
Sales Codes:
[DGZ]=5 Speed Automatic Transmission [W5A380]
[EG2]=3.5L V-6 Gas Engine - [Mercedes Benz]

1	68013908AA	1	2, 3, 6, 7			EG2	DGZ	CHAIN, Timing
2	68013902AA	1	2, 3, 6, 7			EG2	DGZ	GUIDE, Timing Chain
3	05098422AA	4	2, 3, 6, 7			EG2	DGZ	PIN, Belt Tensioner, Guide To Cylinder Head
4	68013904AA	1	2, 3, 6, 7			EG2	DGZ	GUIDE, Timing Chain
5	68013906AA	1	2, 3, 6, 7			EG2	DGZ	GUIDE, Timing Chain
6	68013907AA	1	2, 3, 6, 7			EG2	DGZ	GUIDE, Timing Chain
7	68013910AA	1	2, 3, 6, 7			EG2	DGZ	TENSIONER, Chain

SPRINTER (VB)

SERIES	LINE	BODY	ENGINE	TRANSMISSION
L = LOWLINE	3 = HD DODGE 2WD 2 = Med. Duty DODGE 2WD	03 = CAB CHASSIS WHEEL BASE 3 05 = CAB CHASSIS WHEEL BASE 5 13 = 119 WB 53 = 119 WB 15 = VAN WHEEL BASE 5 55 = WAGON WHEEL BASE 5 17 = VAN WHEEL BASE 7	EG2 = 3.5L V6 Gas Engine EXM = 3.0L V6 Turbo Diesel Engine	DGZ = 5-Speed Auto W5A380 Transmission

Timing Case
Figure 3.5L-540



ITEM	PART NUMBER	QTY	LINE	SERIES	BODY	ENGINE	TRANS	TRIM	DESCRIPTION
NOTE:									
Sales Codes:									
[DGZ]=5 Speed Automatic Transmission [W5A380]									
[EG2]=3.5L V-6 Gas Engine - [Mercedes Benz]									
1	68013873AA	1	2, 3, 6, 7			EG2	DGZ		COVER, Timing Case
2	05073675AB	1	2, 3, 6, 7			EG2	DGZ		SEAL, Crankshaft Oil, Front
3	68013874AA	1	2, 3, 6, 7			EG2	DGZ		COVER
4	05096976AA	1	2, 3, 6, 7			EG2	DGZ		SEAL
5	06104463AA	1	2, 3, 6, 7			EG2	DGZ		PLUG
6	06104683AA	2	2, 3, 6, 7			EG2	DGZ		SCREW, [M6x23]
7	68013875AA	1	2, 3, 6, 7			EG2	DGZ		GASKET
8	06104035AA	1	2, 3, 6, 7			EG2	DGZ		BOLT, [M8x90]
-9									SCREW
	06104028AA	3	2, 3, 6, 7			EG2	DGZ		[M8x45]
	06104032AA	6	2, 3, 6, 7			EG2	DGZ		[M8x65]
10	05098920AA	1	2, 3, 6, 7			EG2	DGZ		SEAL
11	68013876AA	1	2, 3, 6, 7			EG2	DGZ		SEAL

SPRINTER (VB)

SERIES	LINE	BODY	ENGINE	TRANSMISSION
L = LOWLINE	3 = HD DODGE 2WD 2 = Med. Duty DODGE 2WD	03 = CAB CHASSIS WHEEL BASE 3 05 = CAB CHASSIS WHEEL BASE 5 13 = 119 WB 53 = 119 WB 15 = VAN WHEEL BASE 5 55 = WAGON WHEEL BASE 5 17 = VAN WHEEL BASE 7	EG2 = 3.5L V6 Gas Engine EXM = 3.0L V6 Turbo Diesel Engine	DGZ = 5-Speed Auto W5A380 Transmission

Timing Chain & Adjuster
Figure 3.5L-610

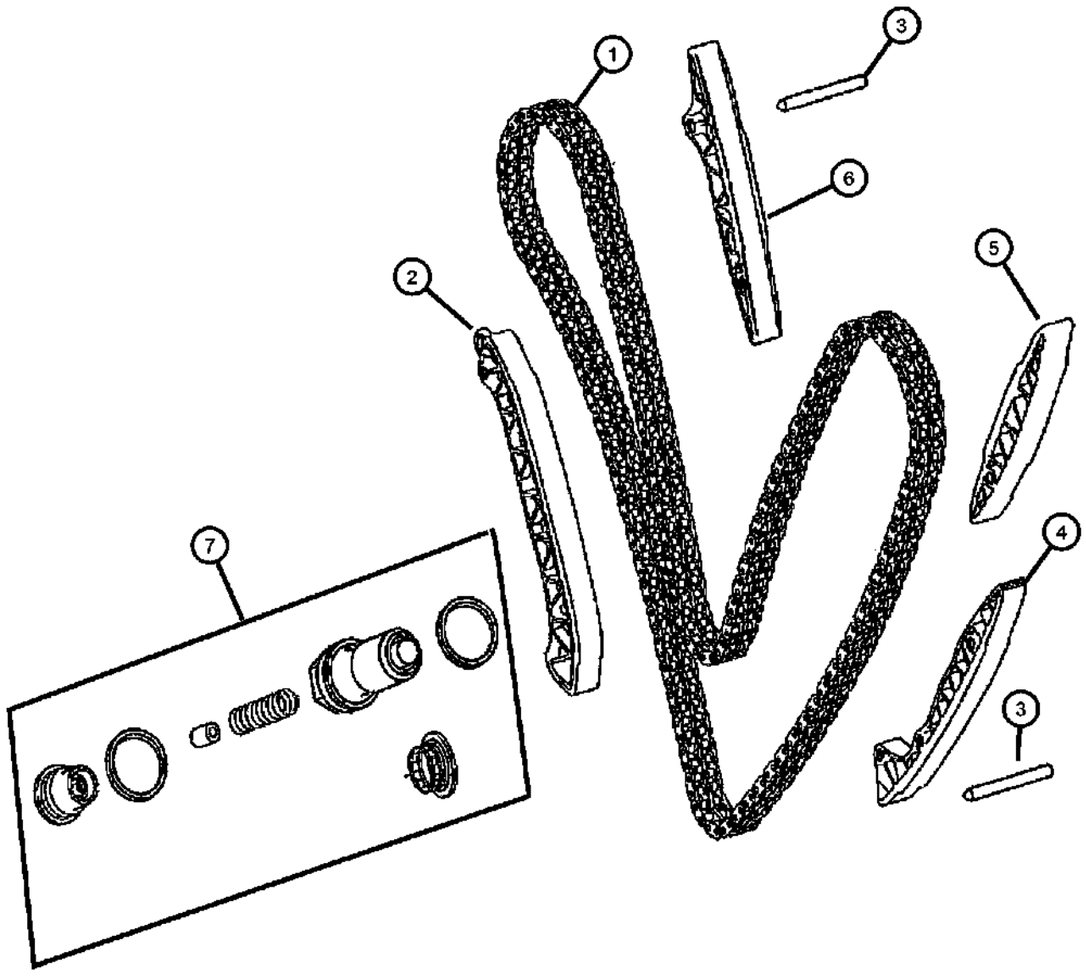

ITEM	PART NUMBER	QTY	LINE	SERIES	BODY	ENGINE	TRANS	TRIM	DESCRIPTION

NOTE:Internal Or Seals Parts ForTensioner Are Not Serviced. Must Replace Tensioner.
Sales Codes:
[DGZ]=5 Speed Automatic Transmission [W5A380]
[EG2]=3.5L V-6 Gas Engine - [Mercedes Benz]

1	68013908AA	1	2, 3, 6, 7	EG2	DGZ		CHAIN, Timing
2	68013902AA	1	2, 3, 6, 7	EG2	DGZ		GUIDE, Timing Chain
3	05098422AA	4	2, 3, 6, 7	EG2	DGZ		PIN, Belt Tensioner, Guide To Cylinder Head
4	68013904AA	1	6, 7, 2, 3	EG2	DGZ		GUIDE, Timing Chain
5	68013906AA	1	2, 3, 6, 7	EG2	DGZ		GUIDE, Timing Chain
6	68013907AA	1	2, 3, 6, 7	EG2	DGZ		GUIDE, Timing Chain
7	68013910AA	1	2, 3, 6, 7	EG2	DGZ		TENSIONER, Chain

SPRINTER (VB)

SERIES	LINE	BODY	ENGINE	TRANSMISSION
L = LOWLINE	3 = HD DODGE 2WD 2 = Med. Duty DODGE 2WD	03 = CAB CHASSIS WHEEL BASE 3 05 = CAB CHASSIS WHEEL BASE 5 13 = 119 WB 53 = 119 WB 15 = VAN WHEEL BASE 5 55 = WAGON WHEEL BASE 5 17 = VAN WHEEL BASE 7	EG2 = 3.5L V6 Gas Engine EXM = 3.0L V6 Turbo Diesel Engine	DGZ = 5-Speed Auto W5A380 Transmission

Oil Pump
Figure 3.5L-710

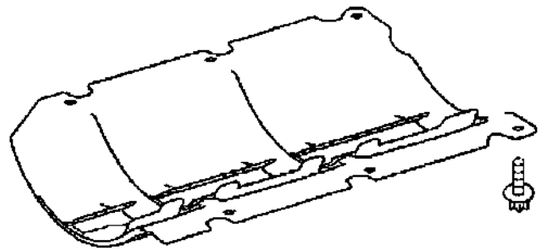

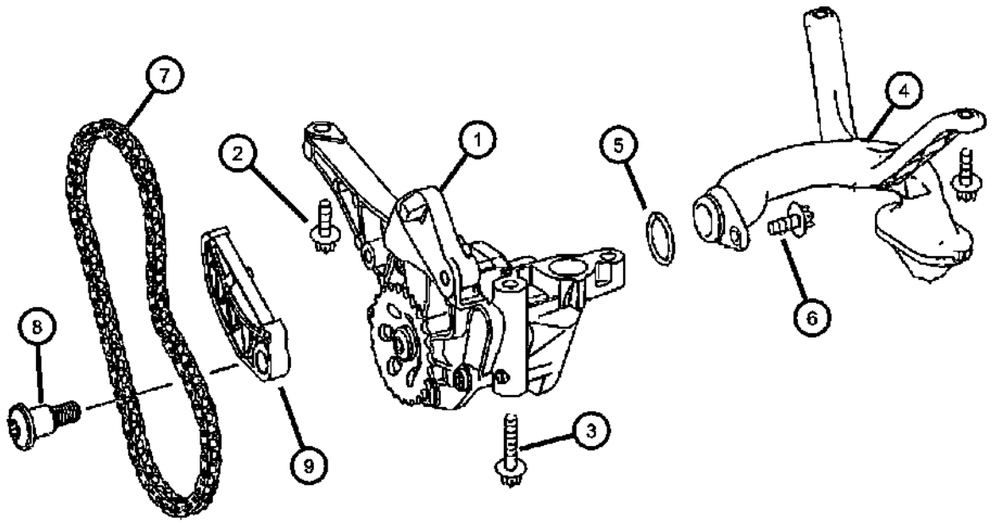

ITEM	PART NUMBER	QTY	LINE	SERIES	BODY	ENGINE	TRANS	TRIM	DESCRIPTION
NOTE:									
Sales Codes:									
[DGZ]=5 Speed Automatic Transmission [W5A380]									
[EG2]=3.5L V-6 Gas Engine - [Mercedes Benz]									
1	68013912AA	1	2, 3, 6, 7			EG2	DGZ		PUMP, Engine Oil
2	05175526AA	2	2, 3, 6, 7			EG2	DGZ		BOLT, Oil Pump To Crankcase
3	06104163AA	1	2, 3, 6, 7			EG2	DGZ		SCREW, Oil Pump To Crankcase
4	68013915AA	1	2, 3, 6, 7			EG2	DGZ		TUBE, Oil Pickup
5	68013916AA	1	2, 3, 6, 7			EG2	DGZ		SEAL, Oil Pick Up Tube, Oil Pickup Tube To Oil Pump
6	06104007AA	2	2, 3, 6, 7			EG2	DGZ		SCREW, Oil Pick Up Tube To Oil Pump
7	68004876AA	1	2, 3, 6, 7			EG2	DGZ		CHAIN, Pump Drive
8	68013918AA	1	2, 3, 6, 7			EG2	DGZ		BOLT
9	68013919AA	1	2, 3, 6, 7			EG2	DGZ		GUIDE, Timing Chain

SPRINTER (VB)

SERIES	LINE	BODY	ENGINE	TRANSMISSION
L = LOWLINE	3 = HD DODGE 2WD 2 = Med. Duty DODGE 2WD	03 = CAB CHASSIS WHEEL BASE 3 05 = CAB CHASSIS WHEEL BASE 5 13 = 119 WB 53 = 119 WB 15 = VAN WHEEL BASE 5 55 = WAGON WHEEL BASE 5 17 = VAN WHEEL BASE 7	EG2 = 3.5L V6 Gas Engine EXM = 3.0L V6 Turbo Diesel Engine	DGZ = 5-Speed Auto W5A380 Transmission

Engine Oil Pan & Engine Oil Level Indicator [EG2]
Figure 3.5L-720

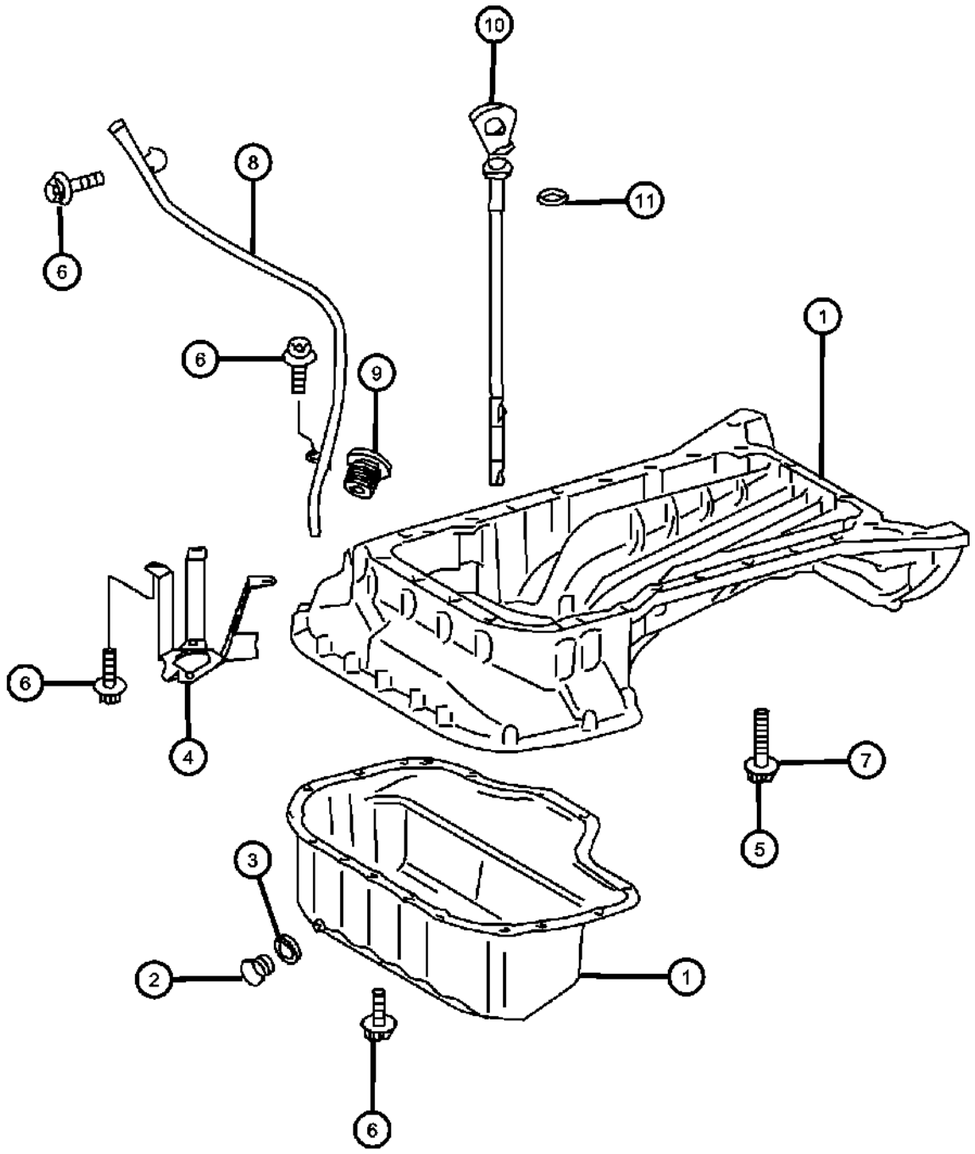

ITEM	PART NUMBER	QTY	LINE	SERIES	BODY	ENGINE	TRANS	TRIM	DESCRIPTION
NOTE:									
Sales Codes:									
[DGZ]=5 Speed Automatic Transmission [W5A380]									
[EG2]=3.5L V-6 Gas Engine - [Mercedes Benz]									
1									PAN, Oil
	68013877AA	1	2, 3, 6, 7			EG2	DGZ		Upper
	68013881AA	1	2, 3, 6, 7			EG2	DGZ		Lower
2	05073945AA	1	2, 3, 6, 7			EG2	DGZ		PLUG, Oil Drain
3	05073946AA	1	2, 3, 6, 7			EG2	DGZ		GASKET, Drain Plug
4	68013878AA	1	2, 3, 6, 7			EG2	DGZ		BRACKET
5	06104025AA	2	2, 3, 6, 7			EG2	DGZ		BOLT, Hex Flange Head, M8x1.25x30, Oil Pan To Cylinder Block, Mounting
6									BOLT
	06104075AA	1	2, 3, 6, 7			EG2	DGZ		Engine Oil Indicator Tube To Cylinder Head [M6x12], Mounting
	06104682AA	1	2, 3, 6, 7			EG2	DGZ		Engine Oil Indicator Tube To Oil Pan [M6x19], Mounting
		3	2, 3, 6, 7			EG2	DGZ		Bracket [M6x19], Mounting
		13	2, 3, 6, 7			EG2	DGZ		Lower Oil Pan To Upper Oil Pan [M6x19], Mounting
7									SCREW
	05073692AA	2	2, 3, 6, 7			EG2	DGZ		Oil Pan To Crankcase Cover Rear, Mounting
	06104007AA	16	3, 6, 7, 2			EG2	DGZ		Oil Pan To Cylinder Block [M6x25], Mounting
		6	2, 3, 6, 7			EG2	DGZ		Oil Pan To Timing Case Cover [M6x25], Mounting
8	68013859AA	1	2, 3, 6, 7			EG2	DGZ		TUBE, Engine Oil Indicator
9	05096486AA	1	2, 3, 6, 7			EG2, EXM	DGZ		SEAL, Engine Oil Indicator tube
10	68013866AA	1	6, 7, 2, 3			EG2	DGZ		INDICATOR, Engine Oil Level
11	05073943AA	1	2, 3, 6, 7			EG2, EXM	DGZ		O RING, Engine Oil Indicator

SPRINTER (VB)

SERIES	LINE	BODY	ENGINE	TRANSMISSION
L = LOWLINE	3 = HD DODGE 2WD 2 = Med. Duty DODGE 2WD	03 = CAB CHASSIS WHEEL BASE 3 05 = CAB CHASSIS WHEEL BASE 5 13 = 119 WB 53 = 119 WB 15 = VAN WHEEL BASE 5 55 = WAGON WHEEL BASE 5 17 = VAN WHEEL BASE 7	EG2 = 3.5L V6 Gas Engine EXM = 3.0L V6 Turbo Diesel Engine	DGZ = 5-Speed Auto W5A380 Transmission

Oil Filter & Oil Cooler
Figure 3.5L-730

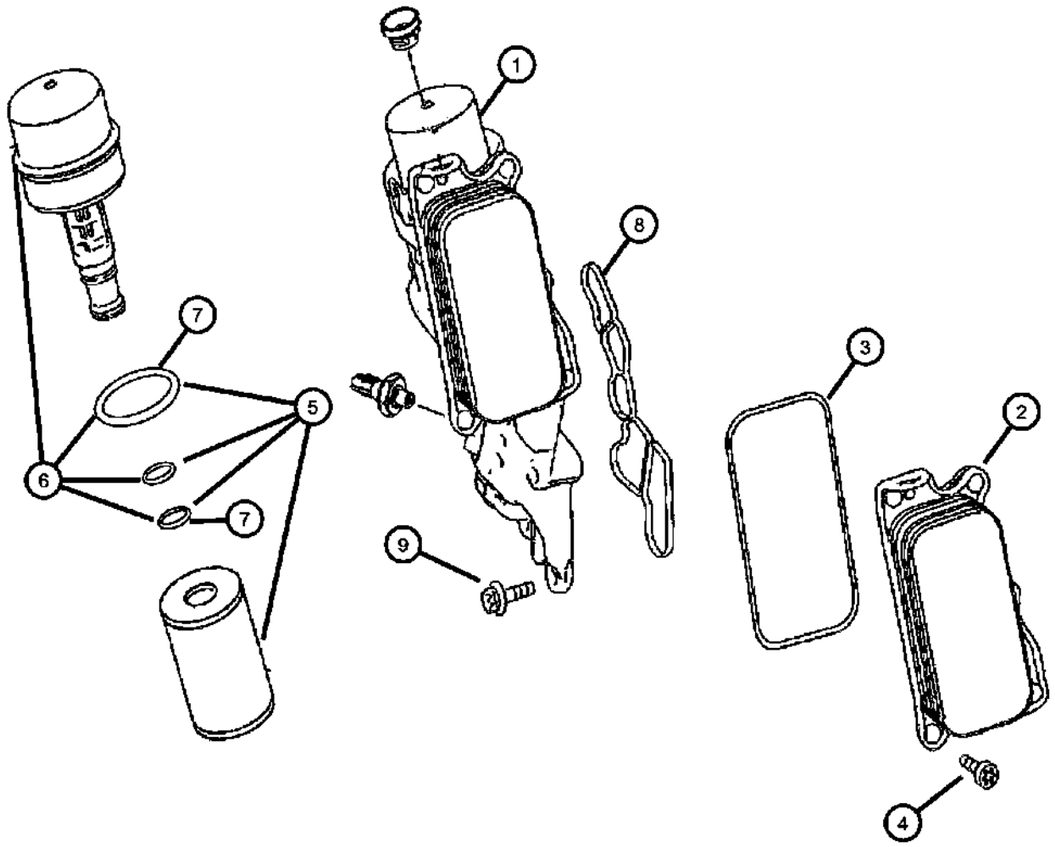

ITEM	PART NUMBER	QTY	LINE	SERIES	BODY	ENGINE	TRANS	TRIM	DESCRIPTION
NOTE:									
Sales Codes:									
[DGZ]=5 Speed Automatic Transmission [W5A380]									
[EG2]=3.5L V-6 Gas Engine - [Mercedes Benz]									
1	68013921AA	1	2, 3, 6, 7			EG2	DGZ		COOLER, Oil, Incluides:Oil Filter, Oil Cooler, Oil Filter / Oil Cooler Adapter To Engine
2	68013923AA	1	2, 3, 6, 7			EG2	DGZ		COOLER, Oil, Oil Cooler Only
3	68013924AA	1	2, 3, 6, 7			EG2	DGZ		GASKET, Oil Cooler
4	06104675AA	5	2, 3, 6, 7			EG2	DGZ		SCREW
5	05102905AB	1	2, 3, 6, 7			EG2	DGZ		FILTER, Engine Oil
6	68013926AA	1	2, 3, 6, 7			EG2	DGZ		CAP AND FILTER ASSEMBLY, OIL, Includes: Cap & Orings
7	05080242AA	1	2, 3, 6, 7			EG2	DGZ		O RING
8	68013928AA	1	2, 3, 6, 7			EG2	DGZ		GASKET, Oil Filter Adapter
9									SCREW
	05073680AA	1	2, 3, 6, 7						Torx Head / Self Taping Thread [29MM] [M8x10.9]
	05137660AA	2	2, 3, 6, 7			EG2, EXM	DGZ		[M8x80]
	06104036AA	2	2, 3, 6, 7			EG2	DGZ		[M8x100]
	06104698AA	1	2, 3, 6, 7			EG2	DGZ		[M8.0x1.25x54.0]

SPRINTER (VB)

SERIES	LINE	BODY	ENGINE	TRANSMISSION
L = LOWLINE	3 = HD DODGE 2WD 2 = Med. Duty DODGE 2WD	03 = CAB CHASSIS WHEEL BASE 3 05 = CAB CHASSIS WHEEL BASE 5 13 = 119 WB 53 = 119 WB 15 = VAN WHEEL BASE 5 55 = WAGON WHEEL BASE 5 17 = VAN WHEEL BASE 7	EG2 = 3.5L V6 Gas Engine EXM = 3.0L V6 Turbo Diesel Engine	DGZ = 5-Speed Auto W5A380 Transmission

Intake Manifold
Figure 3.5L-810

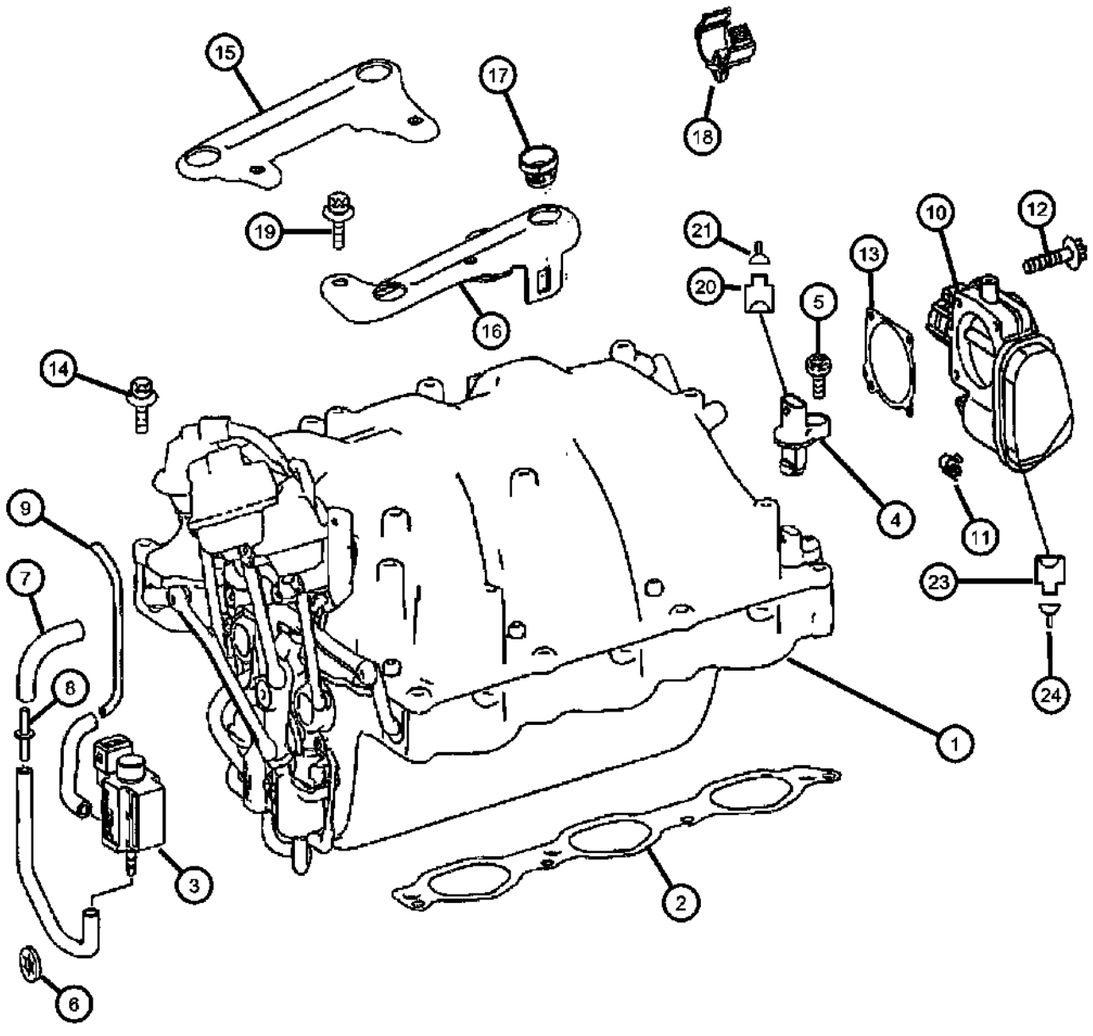

ITEM	PART NUMBER	QTY	LINE	SERIES	BODY	ENGINE	TRANS	TRIM	DESCRIPTION
1	68011680AA	1	2, 3, 6, 7			EG2	DGZ		MANIFOLD, Intake
2	68011683AA	1	2, 3, 6, 7			EG2	DGZ		GASKET, Throttle Body
3	05099823AA	2	2, 3, 6, 7			EG2	DGZ		SOLENOID, Intake Manifold
4	68011686AA	2	2, 3, 6, 7			EG2	DGZ		SOLENOID, Intake Manifold, Intake Manifold [Tumble Flap] Switch
5	06104120AA	2	2, 3, 6, 7			EG2	DGZ		SCREW, Hex Head, M6x12, [M6x12]
6	05102929AA	11	2, 3, 6, 7			EG2	DGZ		PUSH NUT
7	05080390AA	1	2, 3, 6, 7			EG2	DGZ		HOSE, [8x3.5MM]
8	05080337AA	1	2, 3, 6, 7			EG2	DGZ		CONNECTOR, [4MM]
9	05125912AA	0	2, 3, 6, 7			EG2	DGZ		HOSE, Charge Air, [4x0.75MM]
10	05159298AA	1	2, 3, 6, 7			EG2	DGZ		THROTTLE BODY
11	05098164AA	1	2, 3, 6, 7			EG2	DGZ		BRACKET, Hose
12	68011720AA	4	2, 3, 6, 7			EG2	DGZ		SCREW, Throttle Body, [6x35]
13									GASKET
	68011721AA	1	2, 3, 6, 7			EG2	DGZ		Left, Cylinder Head
	68011723AA	1	2, 3, 6, 7			EG2	DGZ		Right, Cylinder Head
14	06104012AA	8	2, 3, 6, 7			EG2	DGZ		SCREW, [M6x50]
15	68011725AA	1	2, 3, 6, 7			EG2	DGZ		BRACKET
16	68011729AA	1	2, 3, 6, 7			EG2	DGZ		BRACKET
17	68005688AA	4	2, 3, 6, 7			EG2	DGZ		INSULATOR
18	68011733AA	1	2, 3, 6, 7			EG2	DGZ		INSULATOR, Wiring
19	06104675AA	4	2, 3, 6, 7			EG2	DGZ		SCREW, Module Bracket To Intake Manifold [M6x14
20	68011285AA	1	2, 3, 6, 7			EG2	DGZ		CONNECTOR
21									TERMINAL
	68011877AA	AR	2, 3, 6, 7			EG2	DGZ		
	68011878AA	AR	2, 3, 6, 7			EG2, EXM	DGZ		[B28/9 B28/10]
-22	68011050AA	AR	2, 3, 6, 7			EG2	DGZ		GASKET, [B28/9 - B28/10]
23	05143912AA	1	2, 3, 6, 7			EG2	DGZ		CONNECTOR, [6 Pin M16/6]
24	05138911AA	AR	2, 3, 6, 7			EG2	DGZ		TERMINAL, [0.5 - 0.75 MM2; M16/6]
-25	05120859AA	99	2, 3, 6, 7			EG2	DGZ		GASKET, [0.9 - 1.3 MMS; M16/6]

SPRINTER (VB)

SERIES	LINE	BODY	ENGINE	TRANSMISSION
L = LOWLINE	3 = HD DODGE 2WD 2 = Med. Duty DODGE 2WD	03 = CAB CHASSIS WHEEL BASE 3 05 = CAB CHASSIS WHEEL BASE 5 13 = 119 WB 53 = 119 WB 15 = VAN WHEEL BASE 5 55 = WAGON WHEEL BASE 5 17 = VAN WHEEL BASE 7	EG2 = 3.5L V6 Gas Engine EXM = 3.0L V6 Turbo Diesel Engine	DGZ = 5-Speed Auto W5A380 Transmission

Intake Manifold
Figure 3.5L-810

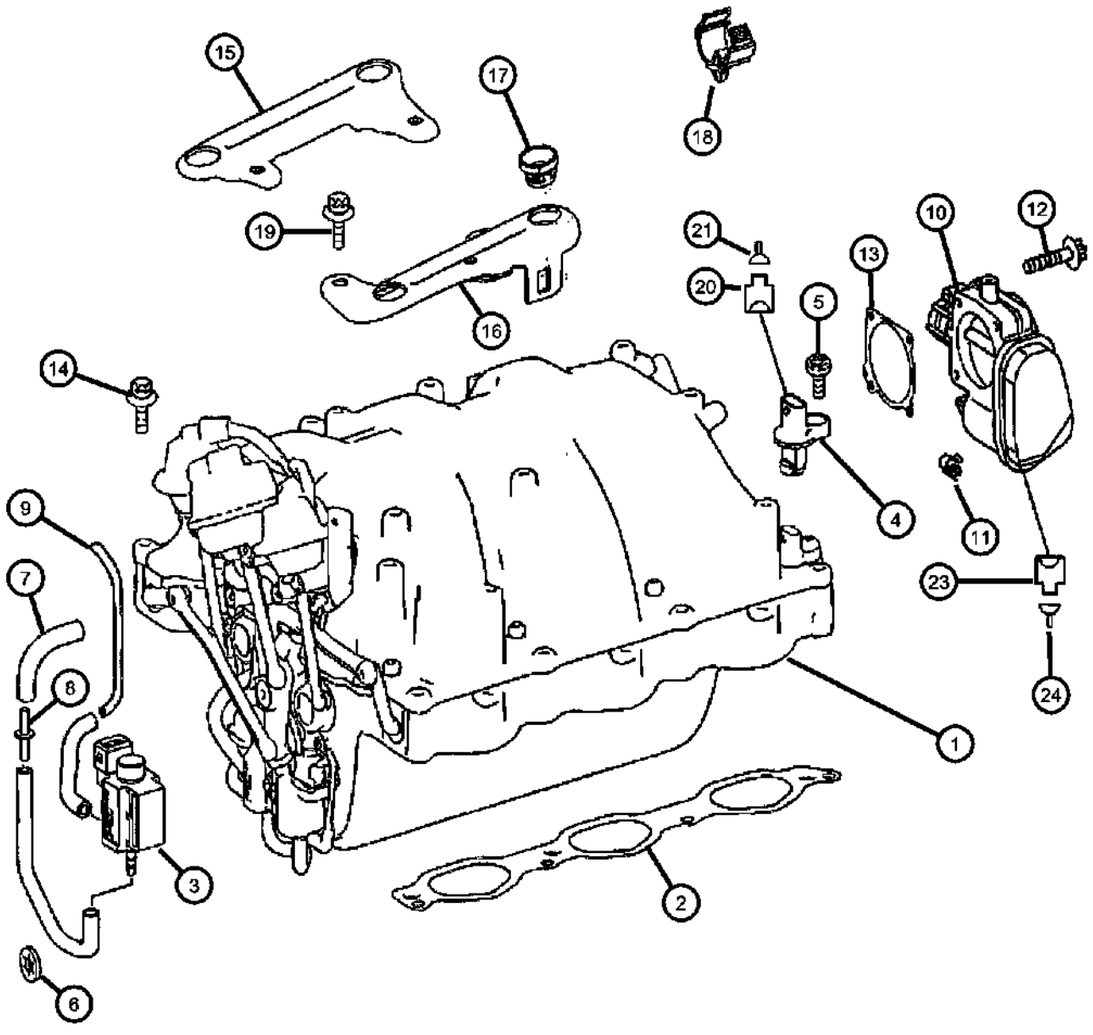

ITEM	PART NUMBER	QTY	LINE	SERIES	BODY	ENGINE	TRANS	TRIM	DESCRIPTION
-26	05135804AA	1	2, 3, 6, 7			EG2, EXM	DGZ		TUBE, Heat Shrink, Green / [0.7 - 2.4 MM2]
-27									TUBING, Heat Shrinkable
	05135848AA	1	2, 3, 6, 7			EG2, EXM	DGZ		Red / [2.0 - 4.0 MM2]
	05135849AA	1	2, 3, 6, 7			EG2, EXM	DGZ		Blue / [3.5 - 8.0 MM2]
	05135850AA	1	2, 3, 6, 7			EG2, EXM	DGZ		Yellow / [7.5 - 12. MM2]
	05135851AA	1	2, 3, 6, 7			EG2, EXM	DGZ		Connector / [0.5 MM2]
	05135852AA	1	2, 3, 6, 7			EG2, EXM	DGZ		Connector / [0.8 MM2]
	05135853AA	1	2, 3, 6, 7			EG2, EXM	DGZ		Connector / [1.3 MM2]
	05135854AA	1	2, 3, 6, 7			EG2, EXM	DGZ		Connector / [2.0 MM2]

SPRINTER (VB)

SERIES	LINE	BODY	ENGINE	TRANSMISSION
L = LOWLINE	3 = HD DODGE 2WD 2 = Med. Duty DODGE 2WD	03 = CAB CHASSIS WHEEL BASE 3 05 = CAB CHASSIS WHEEL BASE 5 13 = 119 WB 53 = 119 WB 15 = VAN WHEEL BASE 5 55 = WAGON WHEEL BASE 5 17 = VAN WHEEL BASE 7	EG2 = 3.5L V6 Gas Engine EXM = 3.0L V6 Turbo Diesel Engine	DGZ = 5-Speed Auto W5A380 Transmission

Exhaust Manifold
Figure 3.5L-820

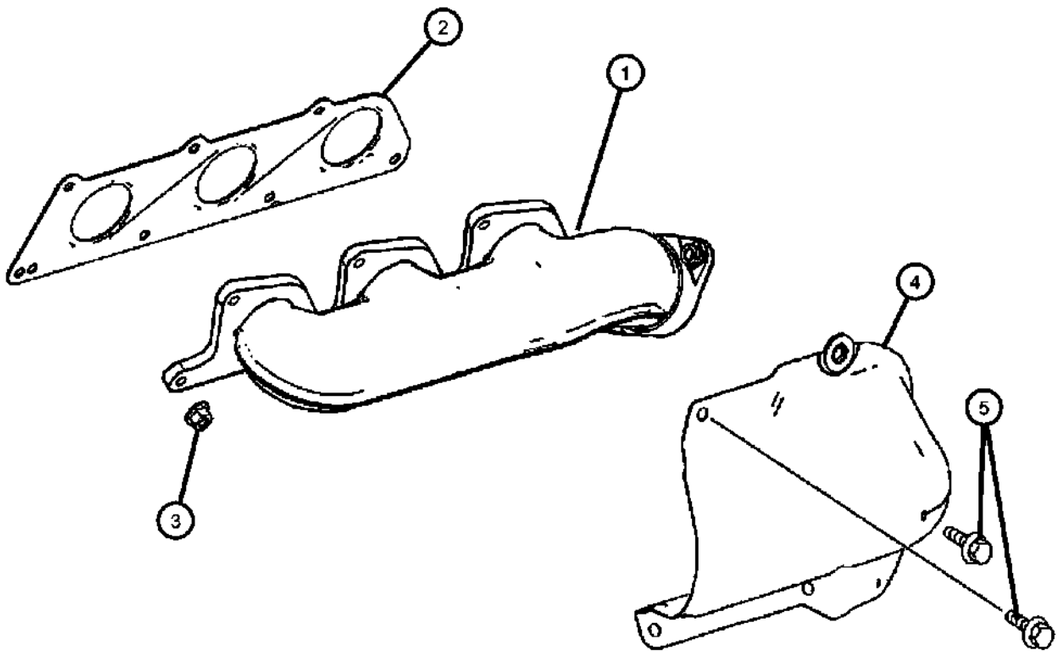

ITEM	PART NUMBER	QTY	LINE	SERIES	BODY	ENGINE	TRANS	TRIM	DESCRIPTION
1									MANIFOLD, Exhaust
	68011745AA	1	2, 3, 6, 7			EG2	DGZ		Right
	68011752AA	1	2, 3, 6, 7			EG2	DGZ		Left
2	68021682AA	2	2, 3, 6, 7			EG2	DGZ		GASKET, Exhaust ManifoldRight & Left
3	06104728AA	7	2, 3, 6, 7			EG2	DGZ		NUT, Exhaust Manifold
4	06104728AA	7							SHIELD, Heat, (NOT SERVICED)
5	06104005AA	3	2, 3, 6, 7			EG2	DGZ		BOLT

SPRINTER (VB)

SERIES	LINE	BODY	ENGINE	TRANSMISSION
L = LOWLINE	3 = HD DODGE 2WD 2 = Med. Duty DODGE 2WD	03 = CAB CHASSIS WHEEL BASE 3 05 = CAB CHASSIS WHEEL BASE 5 13 = 119 WB 53 = 119 WB 15 = VAN WHEEL BASE 5 55 = WAGON WHEEL BASE 5 17 = VAN WHEEL BASE 7	EG2 = 3.5L V6 Gas Engine EXM = 3.0L V6 Turbo Diesel Engine	DGZ = 5-Speed Auto W5A380 Transmission

AR = use ase required - = Non illustrrated part

<< RETURN TO GROUP INDEX

Engine Ventilation
Figure 3.5L-910

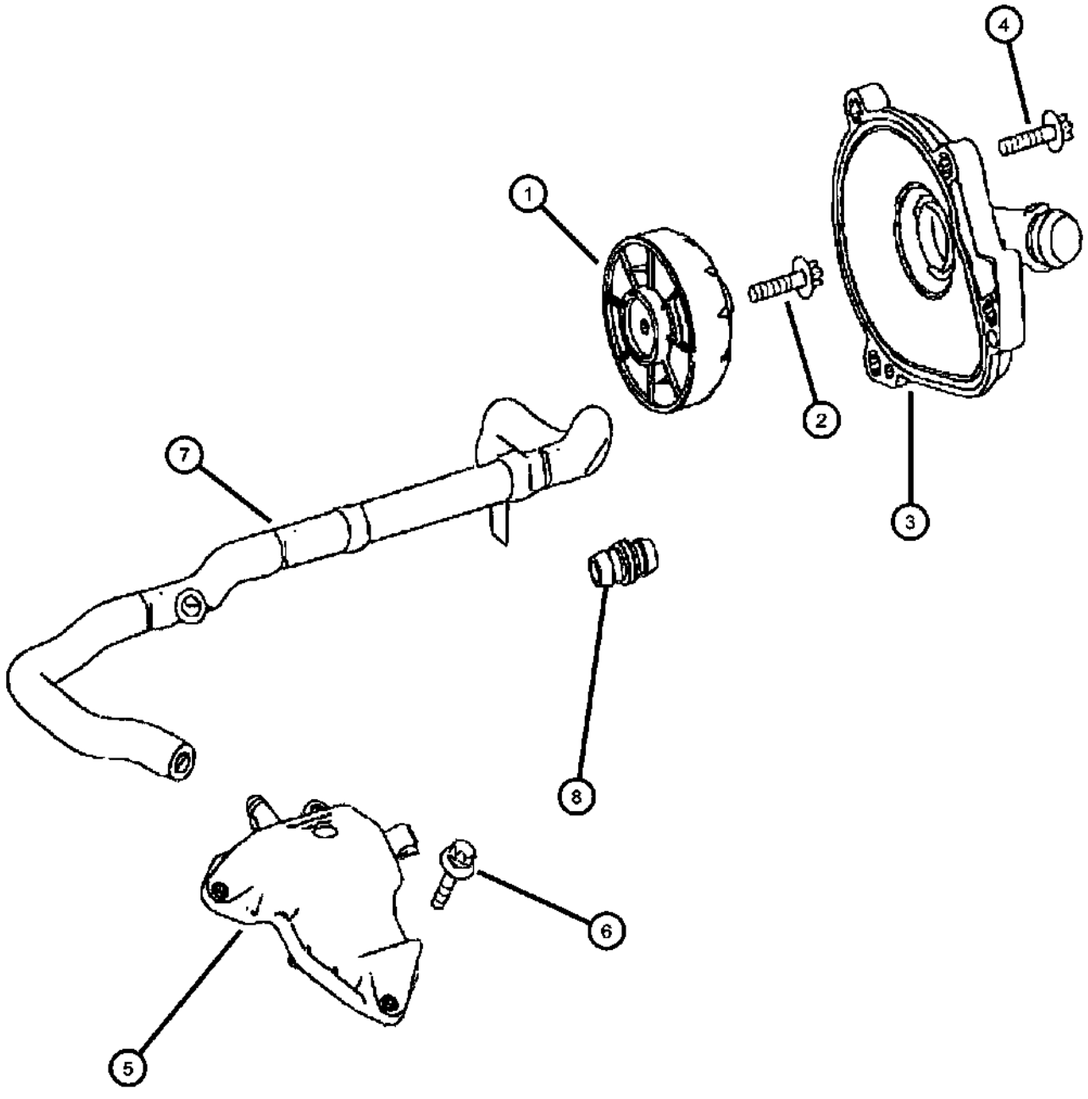

ITEM	PART NUMBER	QTY	LINE	SERIES	BODY	ENGINE	TRANS	TRIM	DESCRIPTION
1	68013305AA	1	2, 3, 6, 7			EG2	DGZ		PAN, Oil
2	68013306AA	1	2, 3, 6, 7			EG2	DGZ		SCREW, [M6x30]
3	68013307AA	1	2, 3, 6, 7			EG2	DGZ		HOUSING
4	06104007AA	4	2, 3, 6, 7			EG2	DGZ		SCREW, [M6x25]
5	68013310AA	1	2, 3, 6, 7			EG2	DGZ		COVER
6	06104005AA	3	2, 3, 6, 7			EG2	DGZ		BOLT
7	68013299AA	1	2, 3, 6, 7			EG2	DGZ		HOSE
8	68013303AA	3	2, 3, 6, 7			EG2	DGZ		CONNECTOR

SPRINTER (VB)

SERIES	LINE	BODY	ENGINE	TRANSMISSION
L = LOWLINE	3 = HD DODGE 2WD 2 = Med. Duty DODGE 2WD	03 = CAB CHASSIS WHEEL BASE 3 05 = CAB CHASSIS WHEEL BASE 5 13 = 119 WB 53 = 119 WB 15 = VAN WHEEL BASE 5 55 = WAGON WHEEL BASE 5 17 = VAN WHEEL BASE 7	EG2 = 3.5L V6 Gas Engine EXM = 3.0L V6 Turbo Diesel Engine	DGZ = 5-Speed Auto W5A380 Transmission

Group - 3.0LD-HO

3.0L Diesel - Mercedes Benz [EXM]

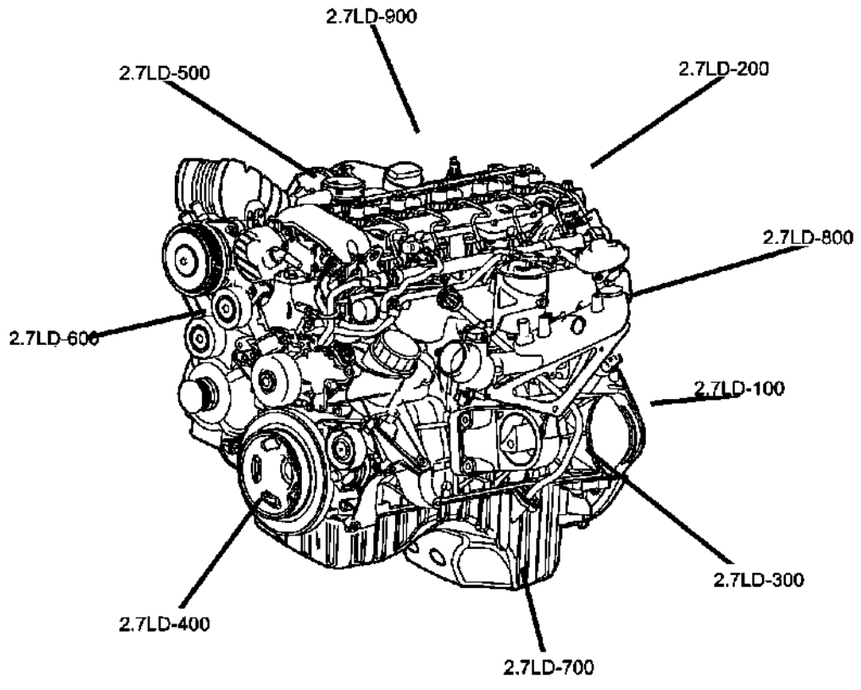

3.0LD-HO-100
Engine Identification

X Model Year	X Manufacturing Plant	XXXXX Component Code/Usage	XXXX Month/Day	XXXXXXXX Serial Code
Last digit of model year	Saltillo S Trenton T Toluca K	Engine 3.3L – 3.8L Usage Pass Car PC Truck T		Last 8 Digits of VIN

3.0LD-HO-200
Cylinder Head

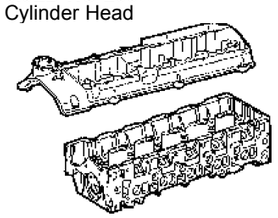

3.0LD-HO-300
Cylinder Block

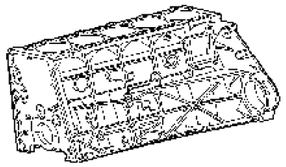

3.0LD-HO-400
Crankshaft, Piston and Drive Plate

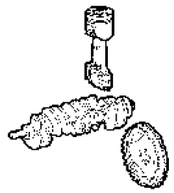

3.0LD-HO-500
Camshafts and Valves

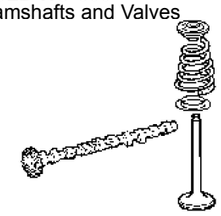

3.0LD-HO-600
Timing Belt and Cover

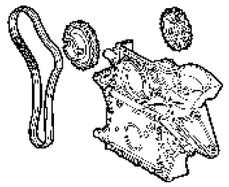

3.0LD-HO-700
Engine Oiling

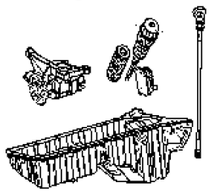

3.0LD-HO-800
Manifolds

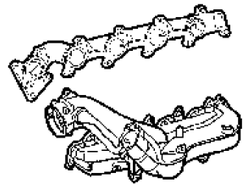

3.0LD-HO-900
Crankcase Ventilation

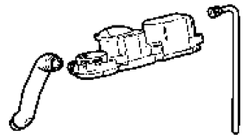

Group - 3.0LD-HO 3.0L Diesel - Mercedes Benz [EXM]

Illustration Title — Group-Fig. No.

Engine Identification
Engine I.D. ..... Fig. 3.0LD-HO - 110

Cylinder Head
Cylinder Head ..... Fig. 3.0LD-HO - 210
Cylinder Head Cover Shields ..... Fig. 3.0LD-HO - 220

Cylinder Block
Cylinder Block ..... Fig. 3.0LD-HO - 310

Crankshaft, Piston and Drive Plate
Crankshaft & Flywheel ..... Fig. 3.0LD-HO - 410
Balance Shaft ..... Fig. 3.0LD-HO - 420
Piston & Connecting Rod ..... Fig. 3.0LD-HO - 430

Camshafts and Valves
Camshaft & Chain Drive ..... Fig. 3.0LD-HO - 510
Valves ..... Fig. 3.0LD-HO - 520

Timing Belt and Cover
Timing Cover ..... Fig. 3.0LD-HO - 610

Engine Oiling
Oil Pan ..... Fig. 3.0LD-HO - 710
Oil Pump ..... Fig. 3.0LD-HO - 720
Oil Filter & Oil Cooler ..... Fig. 3.0LD-HO - 730
Oil Filler Neck & Oil Indicator ..... Fig. 3.0LD-HO - 740

Manifolds
Intake Manifold ..... Fig. 3.0LD-HO - 810
Intake Manifold Crossover ..... Fig. 3.0LD-HO - 820
Exhaust Manifold ..... Fig. 3.0LD-HO - 830
Exhaust Gas Recirculation Cooler ..... Fig. 3.0LD-HO - 840
Turbocharger ..... Fig. 3.0LD-HO - 850

Crankcase Ventilation
Engine Breathing ..... Fig. 3.0LD-HO - 910

Engine I.D.
Figure 3.0LD-HO-110

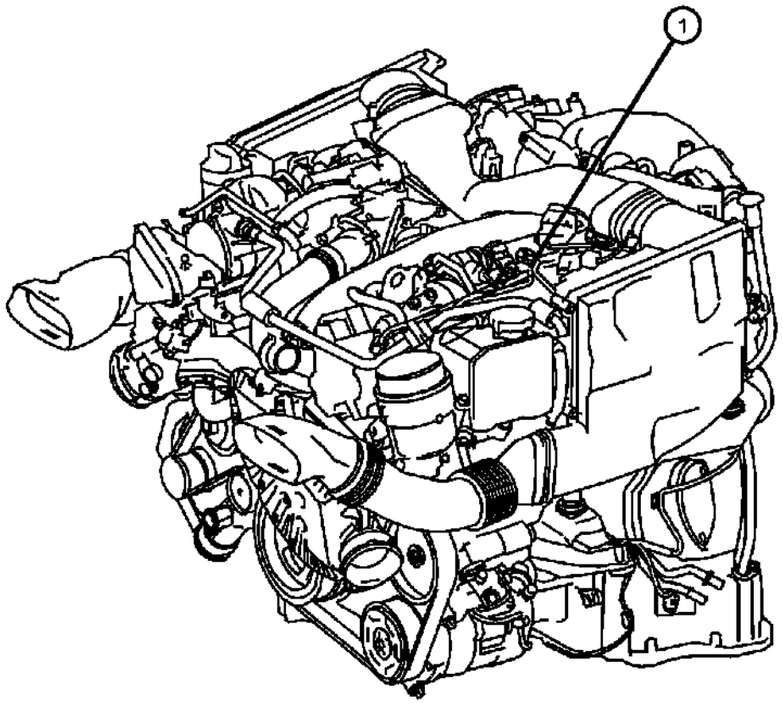

ITEM	PART NUMBER	QTY	LINE	SERIES	BODY	ENGINE	TRANS	TRIM	DESCRIPTION

NOTES:
Sales Code
[EXM] = 3.0L V6 Turbo Diesel Engine

1	68006004AA	1	2, 3, 6, 7			EXM	DGZ		ENGINE, Complete

SPRINTER (VB)

SERIES	LINE	BODY	ENGINE	TRANSMISSION
L = LOWLINE	3 = HD DODGE 2WD 2 = Med. Duty DODGE 2WD	03 = CAB CHASSIS WHEEL BASE 3 05 = CAB CHASSIS WHEEL BASE 5 13 = 119 WB 53 = 119 WB 15 = VAN WHEEL BASE 5 55 = WAGON WHEEL BASE 5 17 = VAN WHEEL BASE 7	EG2 = 3.5L V6 Gas Engine EXM = 3.0L V6 Turbo Diesel Engine	DGZ = 5-Speed Auto W5A380 Transmission

Cylinder Head
Figure 3.0LD-HO-210

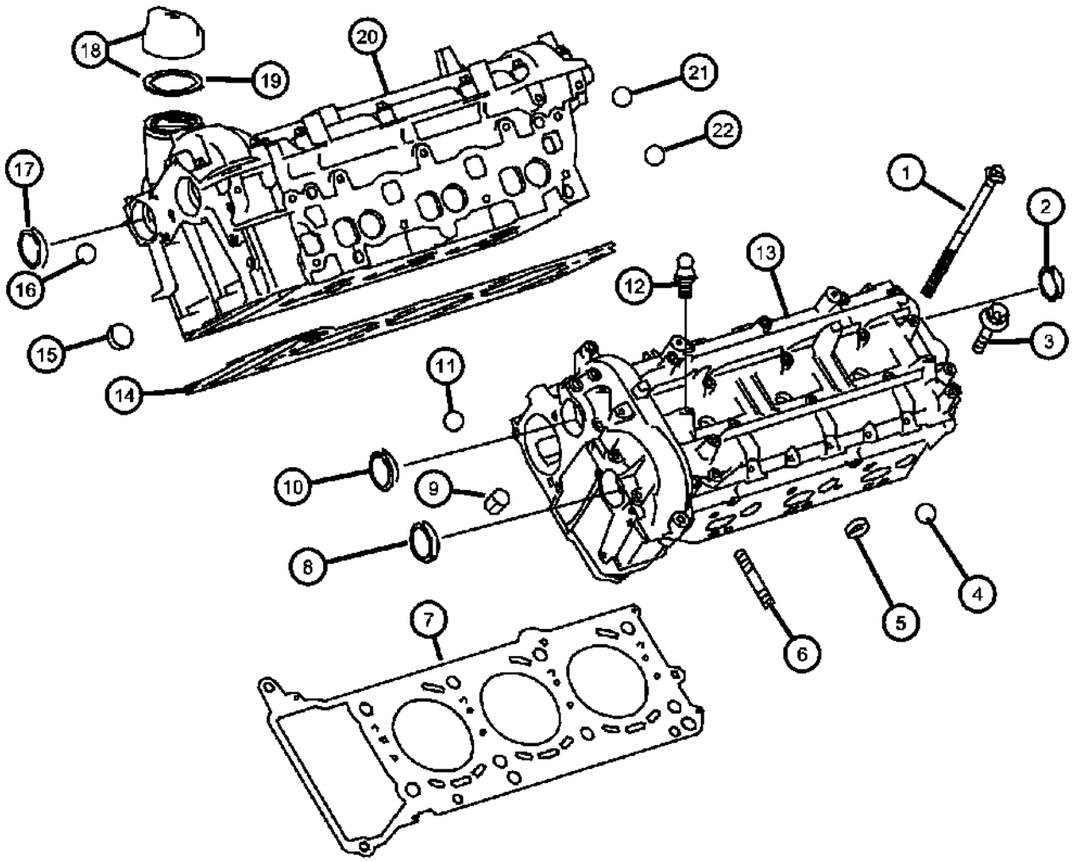

ITEM	PART NUMBER	QTY	LINE	SERIES	BODY	ENGINE	TRANS	TRIM	DESCRIPTION
NOTES:									
Sales Codes:									
[EXM] = 3.0L V6 Turbo Diesel Engine									
1									BOLT
	05096986AA	1	2, 3, 6, 7			EXM	DGZ		M8x35
	05175446AA	8	2, 3, 6, 7			EXM	DGZ		
	06104035AA	4	3, 7			EXM	DGZ		M8x90
		4	2, 3, 6, 7			EXM	DGZ		M8x90
2	05175442AA	1	7, 2, 3, 6			EXM	DGZ		PLUG, Core
3									BOLT
	06104006AA	6	2, 3, 6, 7			EXM	DGZ		Cylinder Head Cover to Cylinder M6x20, Right
		5	2, 3, 6, 7			EXM	DGZ		Cylinder Head Cover to Cylinder M6x20, Left
	06104009AA	23	2, 3, 6, 7			EXM	DGZ		Cylinder Head Cover to Cylinder M6x35, Right
		23	2, 3, 6, 7			EXM	DGZ		Cylinder Head Cover to Cylinder M6x35, Left
4	05138265AA	3	2, 3, 6, 7			EXM	DGZ		BALL, Valve Cooling Bore Outlet Lock
5	05080026AB	3	2, 3, 6, 7			EXM	DGZ		PLUG, CoreRight & Left
6	05080027AA	6	2, 3, 6, 7			EXM	DGZ		STUD, Exhaust Manifold to Cylinder Head, Right & Left
7	05175445AA	1	2, 3, 6, 7			EXM	DGZ		GASKET, Cylinder Head, LeftLeft
8	05175442AA	1	2, 3, 6, 7			EXM	DGZ		PLUG, Core, Camshaft 40 MM
9	05175383AA	4	2, 3, 6, 7			EXM	DGZ		DOWEL PIN, Timing Case to Cylinder Crankcase
10	05175442AA	1	2, 3, 6, 7			EXM	DGZ		PLUG, Core, Camshaft 40MM
11	05175442AA	1							BALL, Serviced with Cylinder Head, (NOT SERVICED)
12	05179385AA	1	2, 3, 6, 7			EXM	DGZ		PIN, Locating, Attachment,Engine Cover
13	05175342AB	1	2, 3, 6, 7			EXM	DGZ		HEAD, CylinderLeft
14	05175444AA	1	2, 3, 6, 7			EXM	DGZ		GASKET, Cylinder Head, LeftRight
15	05080026AB	3	2, 3, 6, 7			EXM	DGZ		PLUG, CoreRight & Left
16	05175317AA	6	2, 3, 6, 7			EXM	DGZ		BALL, Cap,Oil Bore
17	05175442AA	1	2, 3, 6, 7			EXM	DGZ		PLUG, Core, Camshaft 40MM

SPRINTER (VB)

SERIES	LINE	BODY	ENGINE	TRANSMISSION
L = LOWLINE	3 = HD DODGE 2WD 2 = Med. Duty DODGE 2WD	03 = CAB CHASSIS WHEEL BASE 3 05 = CAB CHASSIS WHEEL BASE 5 13 = 119 WB 53 = 119 WB 15 = VAN WHEEL BASE 5 55 = WAGON WHEEL BASE 5 17 = VAN WHEEL BASE 7	EG2 = 3.5L V6 Gas Engine EXM = 3.0L V6 Turbo Diesel Engine	DGZ = 5-Speed Auto W5A380 Transmission

Cylinder Head
Figure 3.0LD-HO-210

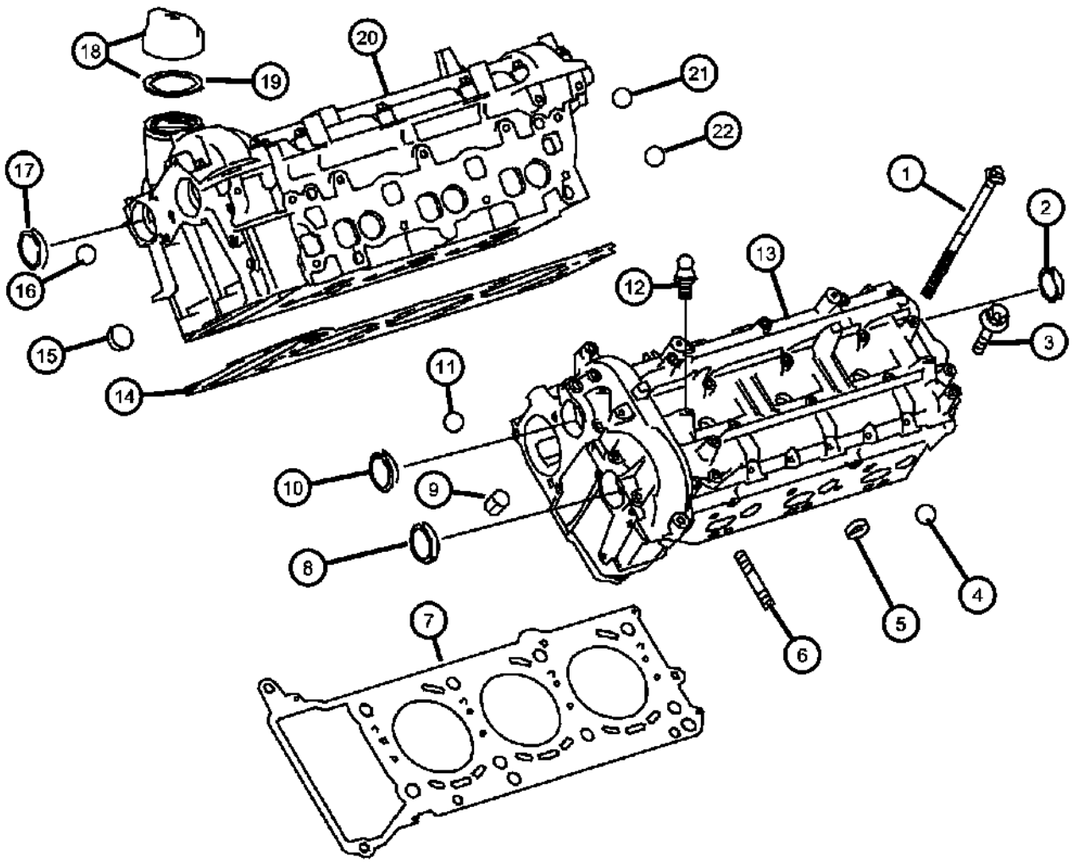

ITEM	PART NUMBER	QTY	LINE	SERIES	BODY	ENGINE	TRANS	TRIM	DESCRIPTION
18	05175447AA	1	2, 3, 6, 7			EXM	DGZ		CAP, Oil Filler, Cylinder Head Cover, Right
19	05080088AA	1	2, 3, 6, 7			EXM	DGZ		SEAL, Oil Fill Cap
20	05175342AB	1	2, 3, 6, 7			EXM	DGZ		HEAD, CylinderRight
21	05175317AA	6	2, 3, 6, 7			EXM	DGZ		BALL, To Plug Oil Return Bore
22	05175317AA	6							BALL, Serviced with Cylinder Head, (NOT SERVICED)

SPRINTER (VB)

SERIES	LINE	BODY	ENGINE	TRANSMISSION
L = LOWLINE	3 = HD DODGE 2WD 2 = Med. Duty DODGE 2WD	03 = CAB CHASSIS WHEEL BASE 3 05 = CAB CHASSIS WHEEL BASE 5 13 = 119 WB 53 = 119 WB 15 = VAN WHEEL BASE 5 55 = WAGON WHEEL BASE 5 17 = VAN WHEEL BASE 7	EG2 = 3.5L V6 Gas Engine EXM = 3.0L V6 Turbo Diesel Engine	DGZ = 5-Speed Auto W5A380 Transmission

Cylinder Head Cover Shields
Figure 3.0LD-HO-220

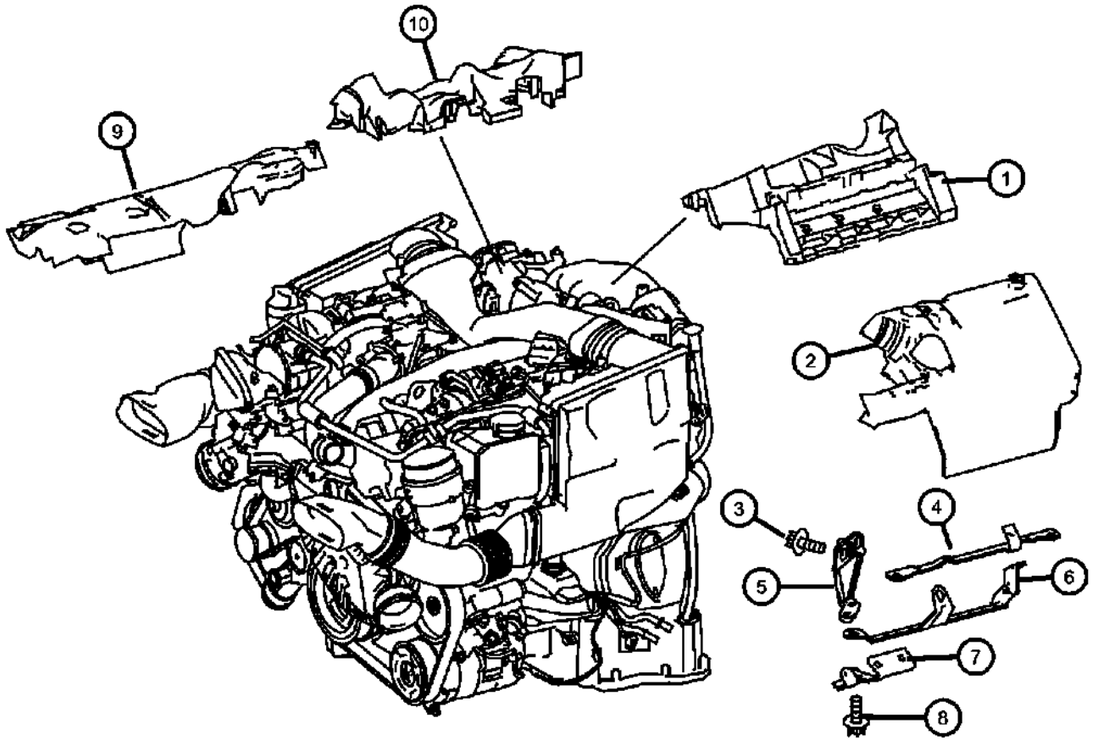

ITEM	PART NUMBER	QTY	LINE	SERIES	BODY	ENGINE	TRANS	TRIM	DESCRIPTION
NOTES:									
Sales Code									
[EXM] = 3.0L V6 Turbo Diesel Engine									
1	68012371AA	1	2, 3, 6, 7			EXM	DGZ		COVER, Left-ZJ9
2	68012372AA	1	2, 3, 6, 7			EXM	DGZ		COVER, Engine, ZJ9
3	06104006AA	2	2, 3, 6, 7			EXM	DGZ		BOLT, Bracket to Cylinder Head Cover M6x20
4	68012387AA	1	2, 3, 6, 7			EXM	DGZ		BRACKET, Engine Covering
5	68012388AA	1	2, 3, 6, 7			EXM	DGZ		BRACKET, Engine Covering
6	68012388AA	1	2, 3, 6, 7			EXM	DGZ		BRACKET, Engine Covering
7	68012390AA	1	2, 3, 6, 7			EXM	DGZ		BRACKET, Engine Covering
8	06104004AA	1	2, 3, 6, 7			EXM	DGZ		BOLT, Bracket to Cylinder Head M6x12
9	68012385AA	1	2, 3, 6, 7			EXM	DGZ		COVER, Engine
10	68012369AA	1	2, 3, 6, 7			EXM	DGZ		COVERRight

SPRINTER (VB)

SERIES	LINE	BODY	ENGINE	TRANSMISSION
L = LOWLINE	3 = HD DODGE 2WD 2 = Med. Duty DODGE 2WD	03 = CAB CHASSIS WHEEL BASE 3 05 = CAB CHASSIS WHEEL BASE 5 13 = 119 WB 53 = 119 WB 15 = VAN WHEEL BASE 5 55 = WAGON WHEEL BASE 5 17 = VAN WHEEL BASE 7	EG2 = 3.5L V6 Gas Engine EXM = 3.0L V6 Turbo Diesel Engine	DGZ = 5-Speed Auto W5A380 Transmission

Cylinder Block
Figure 3.0LD-HO-310

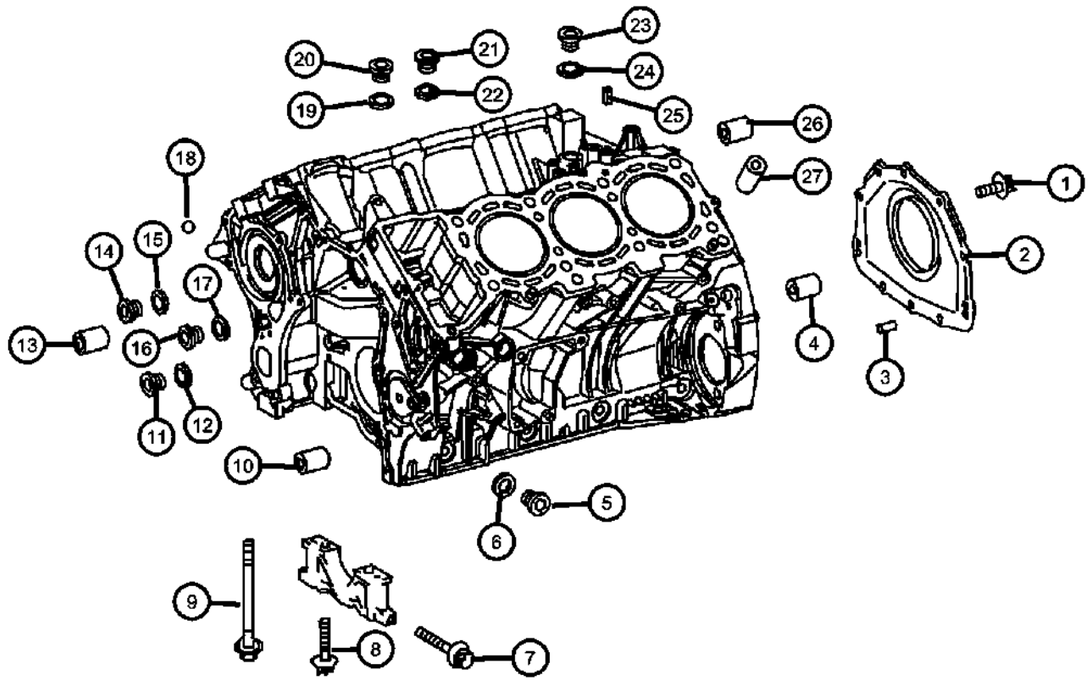

ITEM	PART NUMBER	QTY	LINE	SERIES	BODY	ENGINE	TRANS	TRIM	DESCRIPTION
NOTES:									
Sales Code:									
[EXM] = 3.0L V6 Turbo Diesel Engine									
1	06104006AA	1	2, 3, 6, 7			EXM	DGZ		BOLT, Cover Attachment M6x20
2	68006029AA	1	2, 3, 6, 7			EXM	DGZ		RETAINER AND SEAL, Crankshaft Rear Oil, Cylinder Crankcase
3	05099279AA	2	2, 3, 6, 7			EG2	DGZ		DOWEL PIN
4	05097167AA	2	2, 3, 6, 7			EG2	DGZ		DOWEL PIN, Transmission to Crankcase
5	06104470AA	1	2, 3, 6, 7			EXM	DGZ		PLUG, Pipe, Oil Feed
6	05073866AA	1	2, 3, 6, 7			EXM	DGZ		O RING
7	06104218AA	8	2, 3, 6, 7			EXM	DGZ		BOLT, Crankshaft Bearing Cap to Crankcase,Transverse M10x40
8	05175321AA	13	2, 3, 6, 7			EXM	DGZ		BOLT, Crankshaft Bearing Cap to Cylinder Crankcase
9	05175322AA	3	2, 3, 6, 7			EXM	DGZ		BOLT, Crankshaft Bearing Cap to Cylinder Crankcase
10	05073868AA	4	2, 3, 6, 7			EXM	DGZ		DOWEL PIN, Timing Case to Cylinder Crankcase
11	06104476AA	1	2, 3, 6, 7			EXM	DGZ		PLUG, Pipe, Left Water Supply
12	05133840AA	1	2, 3, 6, 7			EXM	DGZ		O RING
13	68006024AA	1	2, 3, 6, 7			EXM	DGZ		BUSHING
14	06104468AA	1	2, 3, 6, 7			EXM	DGZ		PLUG, Pipe, Water Return
15	05175316AA	1	2, 3, 6, 7			EXM	DGZ		O RING
16	06104470AA	1	2, 3, 6, 7			EXM	DGZ		PLUG, Pipe, Differental Shaft
17	05073866AA	1	2, 3, 6, 7			EXM	DGZ		O RING
18	05175317AA	6	2, 3, 6, 7			EXM	DGZ		BALL, Oil Return Vacuum Pump
19	05133840AA	1	2, 3, 6, 7			EXM	DGZ		O RING
20	06104476AA	1	2, 3, 6, 7			EXM	DGZ		PLUG, Pipe
21	06104472AA	2	2, 3, 6, 7			EXM	DGZ		PLUG, Pipe, Differental Shaft
22	05175309AA	2	2, 3, 6, 7			EXM	DGZ		O RING
23	06104464AA	1	2, 3, 6, 7			EXM	DGZ		PLUG, Pipe, Feed
24	05175317AA	6	2, 3, 6, 7			EXM	DGZ		BALL, Oil Return Vacuum Pump
25	05083930AA	2	2, 3, 6, 7			EXM	DGZ		DOWEL PIN, Turbocharger to Crankcase

SPRINTER (VB)

SERIES	LINE	BODY	ENGINE	TRANSMISSION
L = LOWLINE	3 = HD DODGE 2WD 2 = Med. Duty DODGE 2WD	03 = CAB CHASSIS WHEEL BASE 3 05 = CAB CHASSIS WHEEL BASE 5 13 = 119 WB 53 = 119 WB 15 = VAN WHEEL BASE 5 55 = WAGON WHEEL BASE 5 17 = VAN WHEEL BASE 7	EG2 = 3.5L V6 Gas Engine EXM = 3.0L V6 Turbo Diesel Engine	DGZ = 5-Speed Auto W5A380 Transmission

Cylinder Block
Figure 3.0LD-HO-310

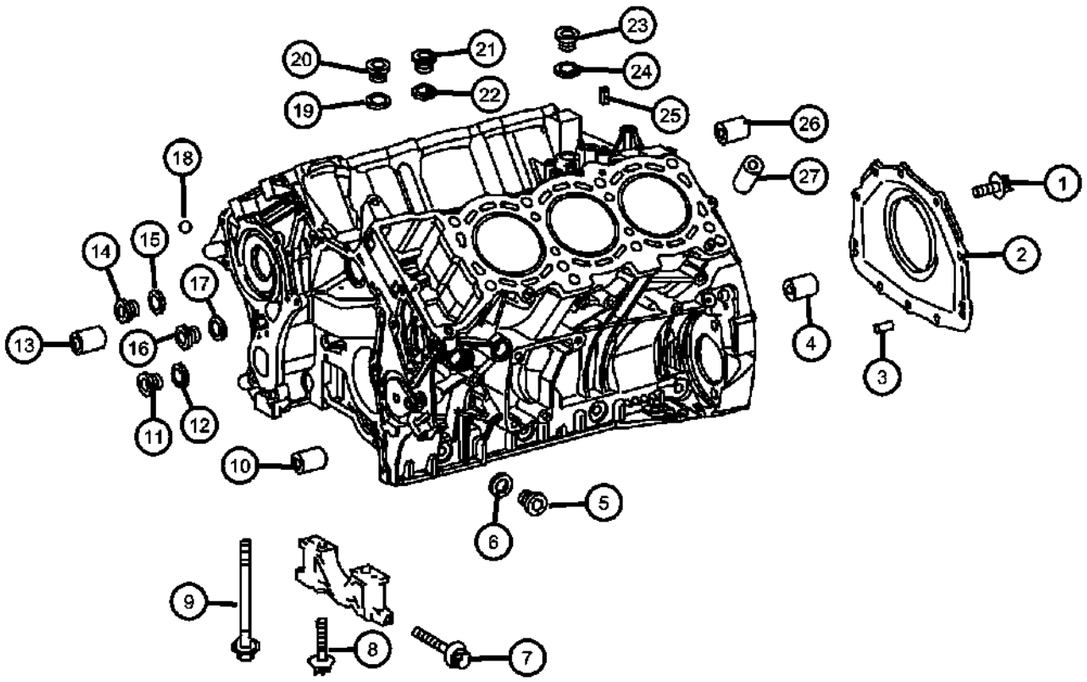

ITEM	PART NUMBER	QTY	LINE	SERIES	BODY	ENGINE	TRANS	TRIM	DESCRIPTION
26	05175323AA	1	2, 3, 6, 7			EXM	DGZ		BUSHING, Crankshaft, Differental Shaft to Crankcase
27	05073868AA	4	2, 3, 6, 7			EXM	DGZ		DOWEL PIN, Cylinder Head to Cylinder Crankcase

SPRINTER (VB)

SERIES	LINE	BODY	ENGINE	TRANSMISSION
L = LOWLINE	3 = HD DODGE 2WD 2 = Med. Duty DODGE 2WD	03 = CAB CHASSIS WHEEL BASE 3 05 = CAB CHASSIS WHEEL BASE 5 13 = 119 WB 53 = 119 WB 15 = VAN WHEEL BASE 5 55 = WAGON WHEEL BASE 5 17 = VAN WHEEL BASE 7	EG2 = 3.5L V6 Gas Engine EXM = 3.0L V6 Turbo Diesel Engine	DGZ = 5-Speed Auto W5A380 Transmission

Crankshaft & Flywheel
Figure 3.0LD-HO-410

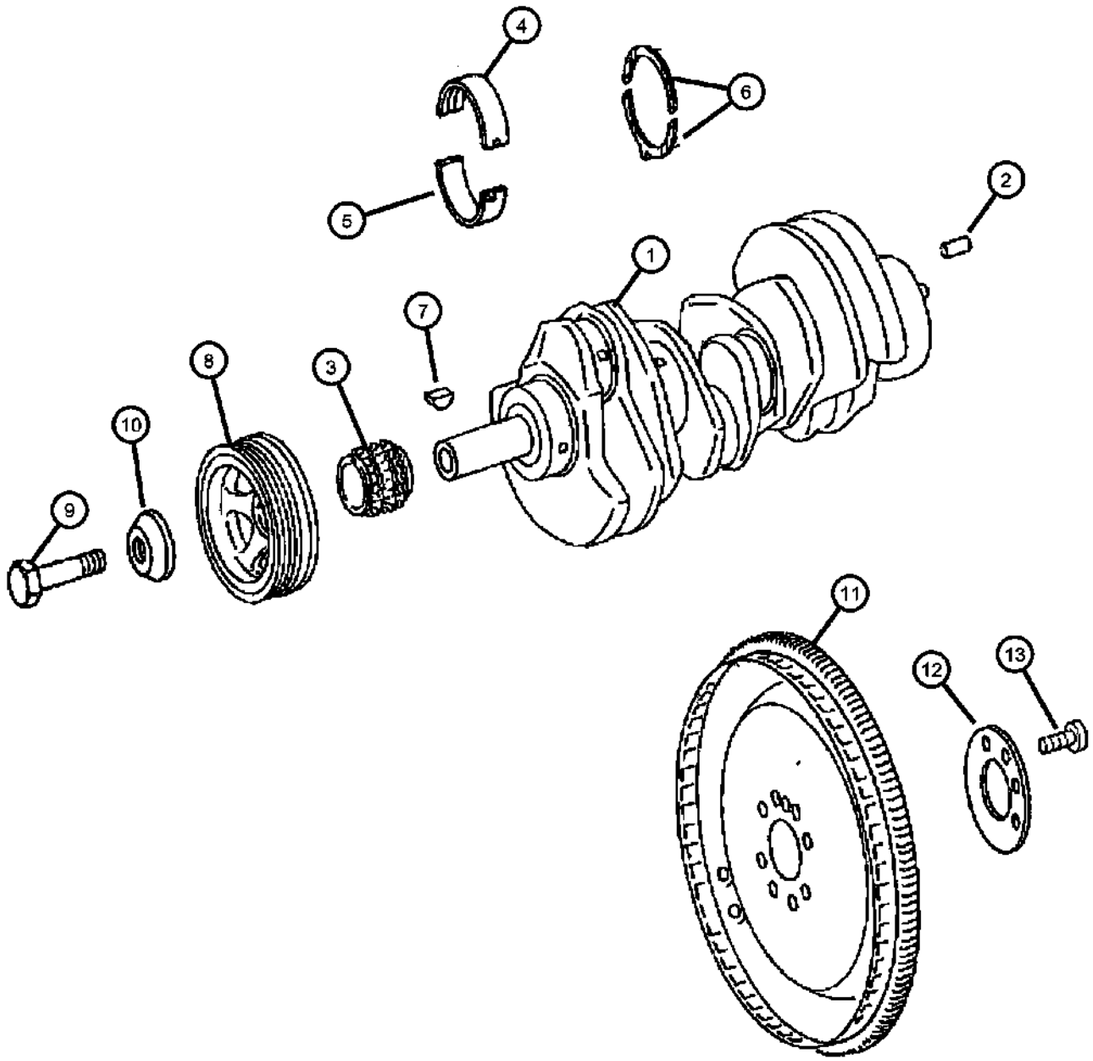

ITEM	PART NUMBER	QTY	LINE	SERIES	BODY	ENGINE	TRANS	TRIM	DESCRIPTION
NOTE:Bearings Only Serviced By Color, Standard Size Only. Over Size Bearings Are Not Serviced. Please Refer To Service Manual For Additiona Sales Code									
[EXM] = 3.0L V6 Turbo Diesel Engine									
1	05179462AA	1	2, 3, 6, 7			EXM	DGZ		CRANKSHAFT AND KEY
2	05080024AA	1	2, 3, 6, 7			EXM	DGZ		DOWEL PIN
3	05175345AA	1	2, 3, 6, 7			EXM	DGZ		GEAR, Crankshaft
4									BEARING, Crankshaft
	05179441AA	4	2, 3, 6, 7			EXM	DGZ		Bearing Color [Blue], Upper, Crank Shaft, Bearing
	05179442AA	4	2, 3, 6, 7			EXM	DGZ		Bearing Color [Yellow], Upper, Crank Shaft, Bearing
	05179443AA	4	2, 3, 6, 7			EXM	DGZ		Bearing Color [Red], Upper, Crank Shaft, Bearing
5									BEARING, Crankshaft
	05179444AA	4	2, 3, 6, 7			EXM	DGZ		Bearing Color [Blue], Lower, Crankshaft, Bearing
	05179445AA	4	2, 3, 6, 7			EXM	DGZ		Bearing Color [Yellow], Lower, Crankshaft, Bearing
	05179446AA	4	2, 3, 6, 7			EXM	DGZ		Bearing Color [Red], Lower, Crankshaft, Bearing
6									THRUST BEARING
	05175357AA	2	2, 3, 6, 7			EXM	DGZ		Standard Size [2.15MM]
	05175358AA	2	2, 3, 6, 7			EXM	DGZ		Standard Size [2.20MM]
7	05101484AB	1	7, 2, 3, 6			EXM	DGZ		KEY, Woodruff
8	68013978AA	1	2, 3, 6, 7			EXM	DGZ		DAMPER, Crankshaft
9	06104301AA	1	2, 3, 6, 7			EXM	DGZ		BOLT
10	05080005AA	1	2, 3, 6, 7			EXM	DGZ		WASHER
11	05175957AA	1	2, 3, 6, 7			EXM	DGZ		FLEX PLATE
12	05139838AA	1	2, 3, 6, 7			EXM	DGZ		PLATE, Flexplate Backing
13	05073700AB	8	2, 3, 6, 7			EXM	DGZ		SCREW

SPRINTER (VB)

SERIES	LINE	BODY	ENGINE	TRANSMISSION
L = LOWLINE	3 = HD DODGE 2WD 2 = Med. Duty DODGE 2WD	03 = CAB CHASSIS WHEEL BASE 3 05 = CAB CHASSIS WHEEL BASE 5 13 = 119 WB 53 = 119 WB 15 = VAN WHEEL BASE 5 55 = WAGON WHEEL BASE 5 17 = VAN WHEEL BASE 7	EG2 = 3.5L V6 Gas Engine EXM = 3.0L V6 Turbo Diesel Engine	DGZ = 5-Speed Auto W5A380 Transmission

Balance Shaft
Figure 3.0LD-HO-420

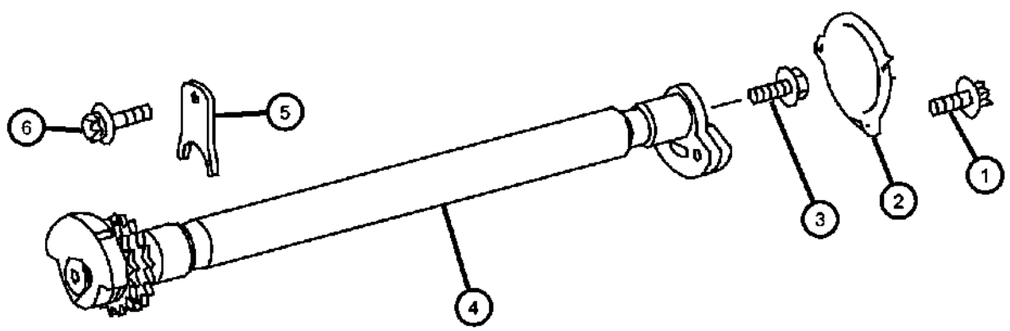

ITEM	PART NUMBER	QTY	LINE	SERIES	BODY	ENGINE	TRANS	TRIM	DESCRIPTION

NOTES:
Sales Code
[EXM] = 3.0L V6 Turbo Diesel Engine

1	06104004AA	3	2, 3, 6, 7			EXM	DGZ		BOLT, Cover Attachment M6x12
2	05175362AB	1	2, 3, 6, 7			EXM	DGZ		COVER, Balance Shaft
3	05102898AA	1	2, 3, 6, 7			EXM	DGZ		SCREW, M8x50
4	05175346AA	1	2, 3, 6, 7			EXM	DGZ		SHAFT, Balance
5	05175360AA	1	2, 3, 6, 7			EXM	DGZ		WASHER
6	06104005AA	1	2, 3, 6, 7			EXM	DGZ		BOLT, M6x16

SPRINTER (VB)

SERIES	LINE	BODY	ENGINE	TRANSMISSION
L = LOWLINE	3 = HD DODGE 2WD 2 = Med. Duty DODGE 2WD	03 = CAB CHASSIS WHEEL BASE 3 05 = CAB CHASSIS WHEEL BASE 5 13 = 119 WB 53 = 119 WB 15 = VAN WHEEL BASE 5 55 = WAGON WHEEL BASE 5 17 = VAN WHEEL BASE 7	EG2 = 3.5L V6 Gas Engine EXM = 3.0L V6 Turbo Diesel Engine	DGZ = 5-Speed Auto W5A380 Transmission

Piston & Connecting Rod
Figure 3.0LD-HO-430

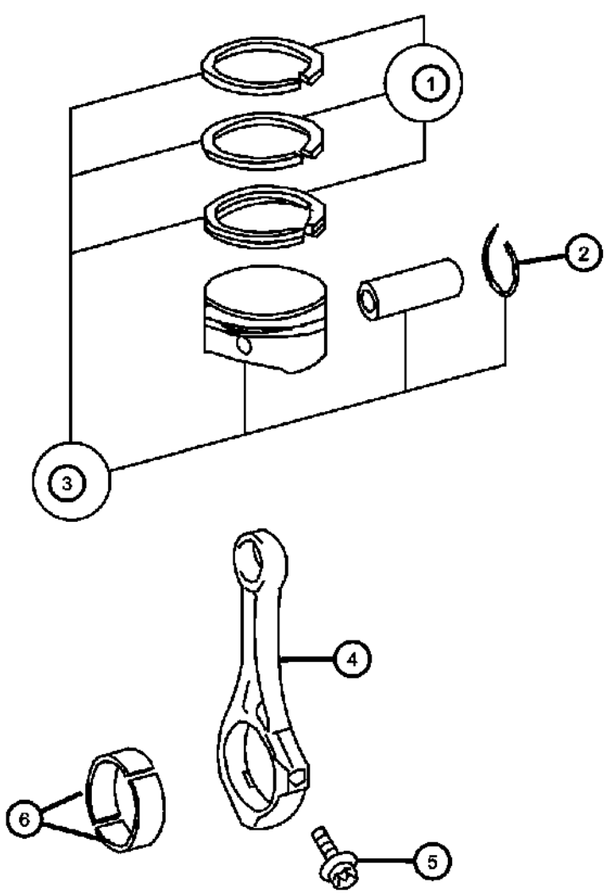

ITEM	PART NUMBER	QTY	LINE	SERIES	BODY	ENGINE	TRANS	TRIM	DESCRIPTION
NOTES:									
Sales Code									
[EXM] = 3.0L V6 Turbo Diesel Engine									
1	05175364AA	3	2, 3, 6, 7			EXM	DGZ		RING, Piston, Parts Kit
2									RING KIT, Piston
	05080034AA	6	2, 3, 6, 7			EXM	DGZ		Din 73130-C30x2.0, Right
		6	2, 3, 6, 7			EXM	DGZ		Din 73130-C30x2.0, Left
3	68013987AA	3	2, 3, 6, 7			EXM	DGZ		PISTON & PIN ASSY, StandardRight
4	68013979AA	6	2, 3, 6, 7			EXM	DGZ		ROD, Connecting
5	05179418AA	12	2, 3, 6, 7			EXM	DGZ		BOLT, Connecting Rod
6	05175363AB	6	2, 3, 6, 7			EXM	DGZ		BEARING, Connecting Rod, STD., Parts Kit

SPRINTER (VB)

SERIES	LINE	BODY	ENGINE	TRANSMISSION
L = LOWLINE	3 = HD DODGE 2WD 2 = Med. Duty DODGE 2WD	03 = CAB CHASSIS WHEEL BASE 3 05 = CAB CHASSIS WHEEL BASE 5 13 = 119 WB 53 = 119 WB 15 = VAN WHEEL BASE 5 55 = WAGON WHEEL BASE 5 17 = VAN WHEEL BASE 7	EG2 = 3.5L V6 Gas Engine EXM = 3.0L V6 Turbo Diesel Engine	DGZ = 5-Speed Auto W5A380 Transmission

Camshaft & Chain Drive
Figure 3.0LD-HO-510

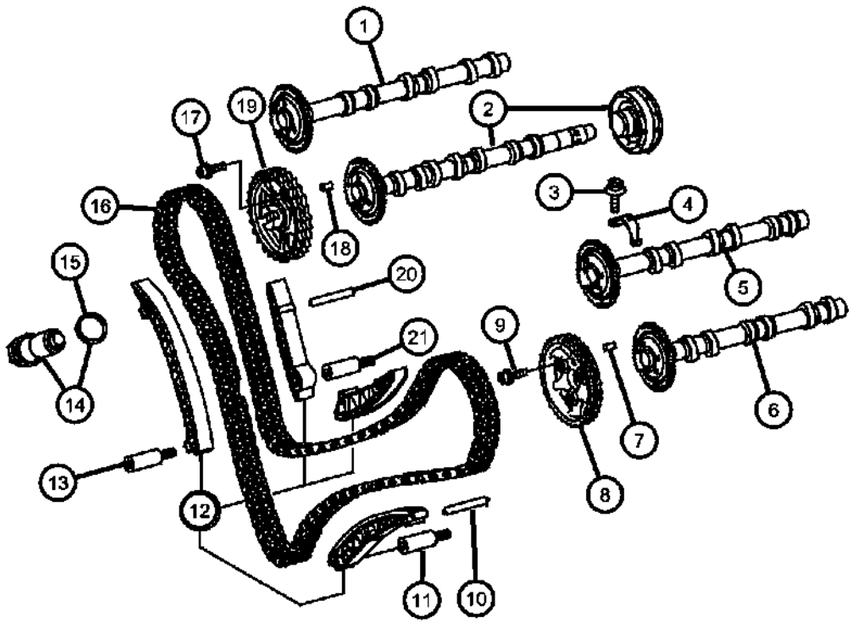

ITEM	PART NUMBER	QTY	LINE	SERIES	BODY	ENGINE	TRANS	TRIM	DESCRIPTION
NOTES:									
Sales Code									
[EXM] = 3.0L V6 Turbo Diesel Engine									
1	68017930AA	1	2, 3, 6, 7			EXM	DGZ		CAMSHAFT, ExhaustRight
2	05175451AA	1	2, 3, 6, 7			EXM			CAMSHAFT, IntakeRight
3	06104075AA	8	2, 3, 6, 7			EXM	DGZ		BOLT, Bracket Mounting M6x12
4	05175448AA	4	2, 3, 6, 7			EXM	DGZ		CAP, Camshaft Bearing
5	05175452AA	1	2, 3, 6, 7			EXM			CAMSHAFT, IntakeLeft
6	05175454AA	1	2, 3, 6, 7			EXM	DGZ		CAMSHAFT, ExhaustLeft
7	05175456AA	1	2, 3, 6, 7			EXM	DGZ		PIN, Dowel
8	05175458AA	1	2, 3, 6, 7			EXM	DGZ		GEAR, Camshaft, Exhaust, Left
9	05073901AA	6	2, 3, 6, 7			EXM	DGZ		BOLT
10	05175460AA	3	2, 3, 6, 7			EXM	DGZ		DOWEL PIN, Sliding Rail to Cylinder Crankcase
11	05175459AA	3	2, 3, 6, 7			EXM	DGZ		DOWEL PIN, Guide Rail to Crankcase Right
12	05175511AA	1	2, 3, 6, 7			EXM	DGZ		GUIDE, Timing Chain, Repair Kit
13	05175459AA	3	2, 3, 6, 7			EXM	DGZ		DOWEL PIN, Sliding Rail to Cylinder Crankcase
14	68017937AA	1	2, 3, 6, 7			EXM	DGZ		TENSIONER, Chain
15	05125905AA	1	2, 3, 6, 7			EXM	DGZ		O RING
16	05175510AA	1	2, 3, 6, 7			EXM	DGZ		CHAIN, Timing
17	05073901AA	6	2, 3, 6, 7			EXM	DGZ		BOLT
18	05175456AA	1	2, 3, 6, 7			EXM	DGZ		PIN, Dowel, Inlet, Right
19	05080110AA	1	2, 3, 6, 7			EXM	DGZ		GEAR, Camshaft, Inlet, Right
20	05175460AA	3	2, 3, 6, 7			EXM	DGZ		DOWEL PIN, Sliding Rail to Cylinder Crankcase
21	05175459AA	3	2, 3, 6, 7			EXM	DGZ		DOWEL PIN, Guide Rail to Crankcase Right

SPRINTER (VB)

SERIES	LINE	BODY	ENGINE	TRANSMISSION
L = LOWLINE	3 = HD DODGE 2WD 2 = Med. Duty DODGE 2WD	03 = CAB CHASSIS WHEEL BASE 3 05 = CAB CHASSIS WHEEL BASE 5 13 = 119 WB 53 = 119 WB 15 = VAN WHEEL BASE 5 55 = WAGON WHEEL BASE 5 17 = VAN WHEEL BASE 7	EG2 = 3.5L V6 Gas Engine EXM = 3.0L V6 Turbo Diesel Engine	DGZ = 5-Speed Auto W5A380 Transmission

Valves
Figure 3.0LD-HO-520

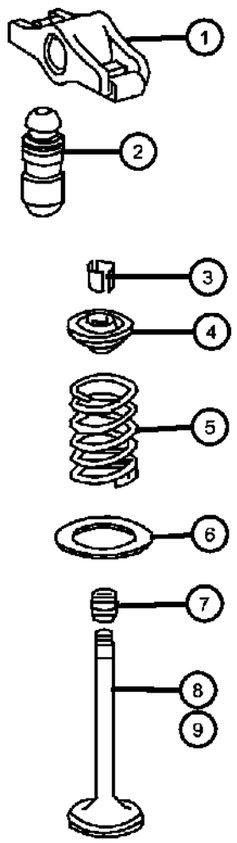

ITEM	PART NUMBER	QTY	LINE	SERIES	BODY	ENGINE	TRANS	TRIM	DESCRIPTION
NOTES: Sales Code [EXM] = 3.0L V6 Turbo Diesel Engine									
1	05175441AA	24	2, 3, 6, 7			EXM	DGZ		ROCKER ARM, Inlet and Exhaust ValveRight & Left
2	05175440AA	24	2, 3, 6, 7			EXM	DGZ		ADJUSTER, Valve Lash
3	05175399AA	24	2, 3, 6, 7			EG2	DGZ		LOCK, Valve Spring RetainerRight & Left
4	05175400AA	24	2, 3, 6, 7			EXM	DGZ		RETAINER, Valve SpringTop
5	05175398AA	6	2, 3, 6, 7			EXM	DGZ		SPRING, Valve, Intake, Right & Left
6	05175401AA	24	2, 3, 6, 7			EXM	DGZ		RETAINER, Valve Spring, Bottom
7	05175438AA	6	2, 3, 6, 7			EG2	DGZ		SEAL, Valve Guide
8	05175396AA	6	2, 3, 6, 7			EXM	DGZ		VALVE, Intake, StandardRight & Left
9	05175397AA	6	2, 3, 6, 7			EXM	DGZ		VALVE, Exhaust, StandardRight & Left

SPRINTER (VB)

SERIES	LINE	BODY	ENGINE	TRANSMISSION
L = LOWLINE	3 = HD DODGE 2WD 2 = Med. Duty DODGE 2WD	03 = CAB CHASSIS WHEEL BASE 3 05 = CAB CHASSIS WHEEL BASE 5 13 = 119 WB 53 = 119 WB 15 = VAN WHEEL BASE 5 55 = WAGON WHEEL BASE 5 17 = VAN WHEEL BASE 7	EG2 = 3.5L V6 Gas Engine EXM = 3.0L V6 Turbo Diesel Engine	DGZ = 5-Speed Auto W5A380 Transmission

Timing Cover
Figure 3.0LD-HO-610

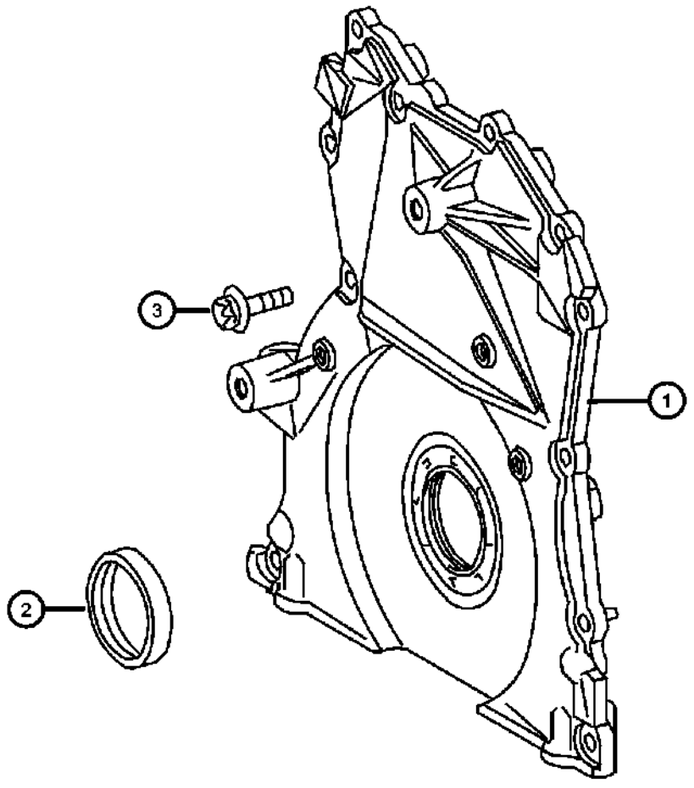

ITEM	PART NUMBER	QTY	LINE	SERIES	BODY	ENGINE	TRANS	TRIM	DESCRIPTION
NOTES:									
Sales Code									
[EXM] =3.0L V6 Turbo Diesel Engine									
1	05175337AA	1	2, 3, 6, 7			EXM	DGZ		COVER, Timing Case
2	05073675AB	1	2, 3, 6, 7			EG2	DGZ		SEAL, Crankshaft Oil, Front, Radial-Lip Type Oil Seal
3	05175338AA	12	2, 3, 6, 7			EXM	DGZ		BOLT, M6x20 MK

SPRINTER (VB)

SERIES	LINE	BODY	ENGINE	TRANSMISSION
L = LOWLINE	3 = HD DODGE 2WD 2 = Med. Duty DODGE 2WD	03 = CAB CHASSIS WHEEL BASE 3 05 = CAB CHASSIS WHEEL BASE 5 13 = 119 WB 53 = 119 WB 15 = VAN WHEEL BASE 5 55 = WAGON WHEEL BASE 5 17 = VAN WHEEL BASE 7	EG2 = 3.5L V6 Gas Engine EXM = 3.0L V6 Turbo Diesel Engine	DGZ = 5-Speed Auto W5A380 Transmission

Oil Pan
Figure 3.0LD-HO-710

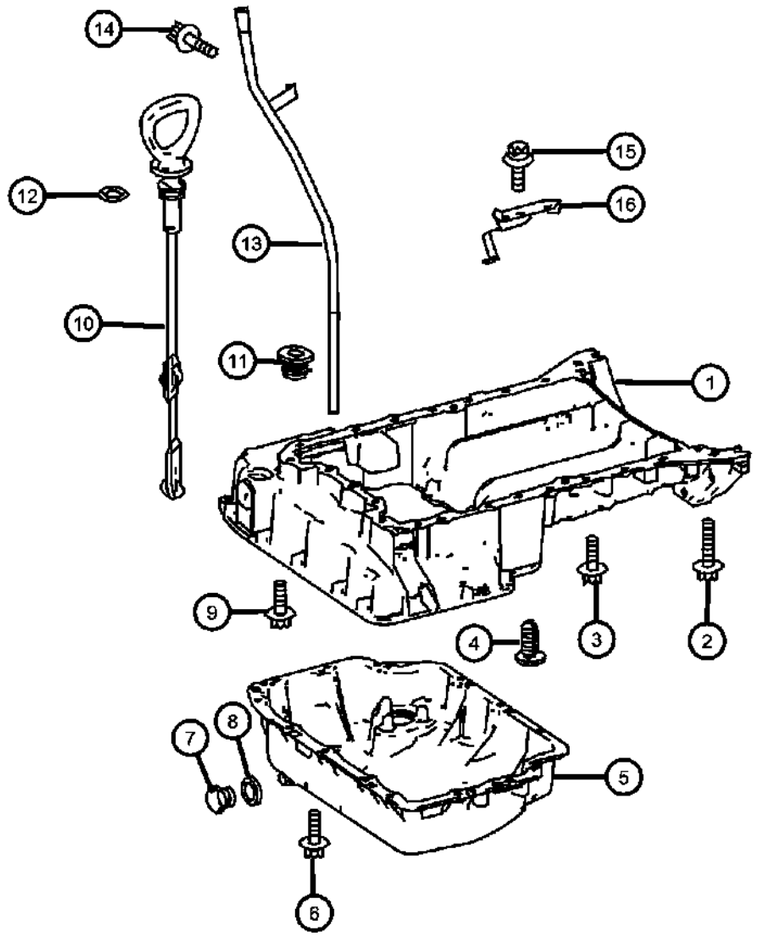

ITEM	PART NUMBER	QTY	LINE	SERIES	BODY	ENGINE	TRANS	TRIM	DESCRIPTION
NOTES:									
Sales Code									
[EXM] = 3.0L V6 Turbo Diesel Engine									
1	68006066AA	1	2, 3, 6, 7			EXM	DGZ		PAN, OilUpper
2									SCREW
	06104024AA	2	3, 7			EG2, EXM	DGZ		Oil Pan to Cylinder Crankcase M8x25
		2	2, 3, 6, 7			EG2, EXM	DGZ		Oil Pan to Cylinder Crankcase M8x25
3	06104009AA	2	2, 3, 6, 7			EG2, EXM	DGZ		BOLT, Bracket to Oil Pan M6x35
4	05175339AA	2	2, 3, 6, 7			EXM	DGZ		BRACKET, Oil Pan
5	68006079AA	1	2, 3, 6, 7			EXM	DGZ		PAN, OilLower
6	68006084AA	14	2, 3, 6, 7			EXM	DGZ		SCREW, Upper Pan to Lower
7	05073945AA	1	2, 3, 6, 7			EG2	DGZ		PLUG, Oil Drain
8	05073946AA	1	2, 3, 6, 7			EXM	DGZ		GASKET, Drain Plug
9	06104684AA	1	2, 3, 6, 7			EXM	DGZ		BOLT, Upper Part of Oil Pan to Crankcase M6x28
10	68006137AA	1	2, 3, 6, 7			EXM	DGZ		INDICATOR, Engine Oil Level
11	05096486AA	1	2, 3, 6, 7			EG2	DGZ		SEAL, Suction Pipe to Oil Pan
12	05073943AA	1	2, 3, 6, 7			EXM	DGZ		O RING
13	68006098AA	1	2, 3, 6, 7			EXM	DGZ		TUBE, Engine Oil Indicator
14	05183964AA	1	2, 3, 6, 7			EXM	DGZ		SCREW, Oil Suction Pipe to Oil Pan M6x10
15	06104681AA	2	2, 3, 6, 7			EXM	DGZ		SCREW, Bracket to Cylinder Head Cover M6x15
16	68006148AA	1	2, 3, 6, 7			EXM	DGZ		BRACKET

SPRINTER (VB)

SERIES	LINE	BODY	ENGINE	TRANSMISSION
L = LOWLINE	3 = HD DODGE 2WD 2 = Med. Duty DODGE 2WD	03 = CAB CHASSIS WHEEL BASE 3 05 = CAB CHASSIS WHEEL BASE 5 13 = 119 WB 53 = 119 WB 15 = VAN WHEEL BASE 5 55 = WAGON WHEEL BASE 5 17 = VAN WHEEL BASE 7	EG2 = 3.5L V6 Gas Engine EXM = 3.0L V6 Turbo Diesel Engine	DGZ = 5-Speed Auto W5A380 Transmission

Oil Pump
Figure 3.0LD-HO-720

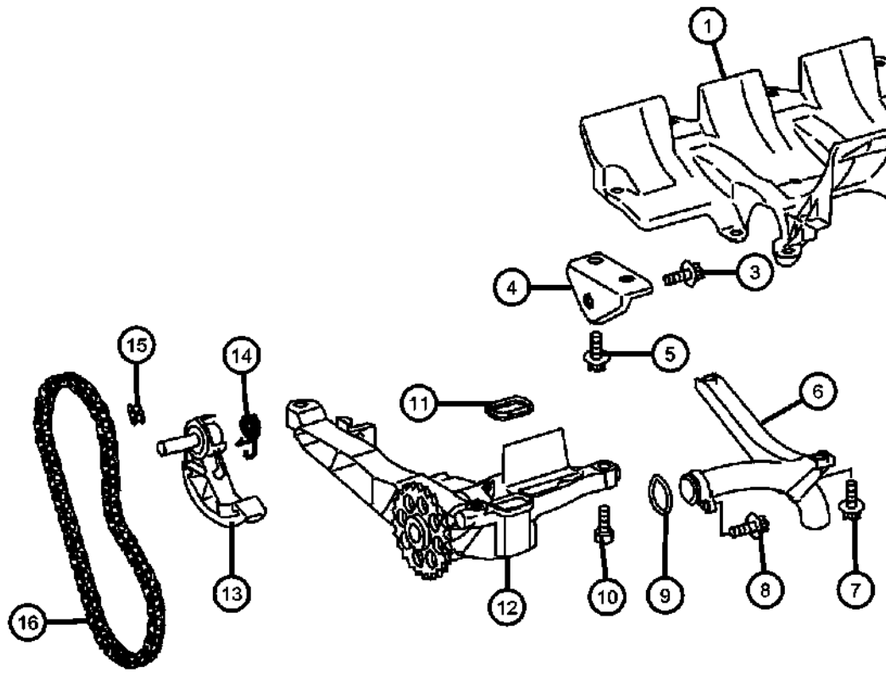

ITEM	PART NUMBER	QTY	LINE	SERIES	BODY	ENGINE	TRANS	TRIM	DESCRIPTION

NOTES:
Sales Code
[EXM] = 3.0L V6 Turbo Diesel Engine

1	68017821AA	1	2, 3, 6, 7			EXM	DGZ		SLINGER, Oil
2	06104682AA	7	2, 3, 6, 7			EXM	DGZ		BOLT, M6x19
3	06104004AA	2	2, 3, 6, 7			EXM	DGZ		BOLT, Bracket to Oil Pump M6x12
4	05175528AA	1	2, 3, 6, 7			EXM	DGZ		BRACKET, At Oil Pump
5	06104682AA	1	2, 3, 6, 7			EXM	DGZ		BOLT, Bracket to Oil Pump M6x19
6	68014037AA	1	2, 3, 6, 7			EXM	DGZ		TUBE, Oil Pickup
7	06104682AA	2	2, 3, 6, 7			EXM	DGZ		BOLT, Intake Manifold to Cylinder Crankcase M6x19
8	06104682AA	1	2, 3, 6, 7			EXM	DGZ		BOLT, Suction Pipe to Oil Pump M6x19
9	05175523AA	1	2, 3, 6, 7			EXM	DGZ		O RING
10	05175526AA	3	2, 3, 6, 7			EXM	DGZ		BOLT, Oil Pump on Crankcase
11	05175527AA	1	2, 3, 6, 7			EXM	DGZ		GASKET, Oil Pump
12	05179493AA	1	2, 3, 6, 7			EXM	DGZ		PUMP, Engine Oil
13	05175524AA	1	2, 3, 6, 7			EXM	DGZ		GUIDE, Timing Chain, Suction Basket to Oil Pump Housing
14	05175525AA	1	2, 3, 6, 7			EXM	DGZ		SPRING, At Clamp
15	05080129AA	1	2, 3, 6, 7			EXM	DGZ		LINK, Chain
16	05080128AA	1	2, 3, 6, 7			EXM	DGZ		CHAIN, Oil Pump Drive

SPRINTER (VB)

SERIES	LINE	BODY	ENGINE	TRANSMISSION
L = LOWLINE	3 = HD DODGE 2WD 2 = Med. Duty DODGE 2WD	03 = CAB CHASSIS WHEEL BASE 3 05 = CAB CHASSIS WHEEL BASE 5 13 = 119 WB 53 = 119 WB 15 = VAN WHEEL BASE 5 55 = WAGON WHEEL BASE 5 17 = VAN WHEEL BASE 7	EG2 = 3.5L V6 Gas Engine EXM = 3.0L V6 Turbo Diesel Engine	DGZ = 5-Speed Auto W5A380 Transmission

Oil Filter & Oil Cooler
Figure 3.0LD-HO-730

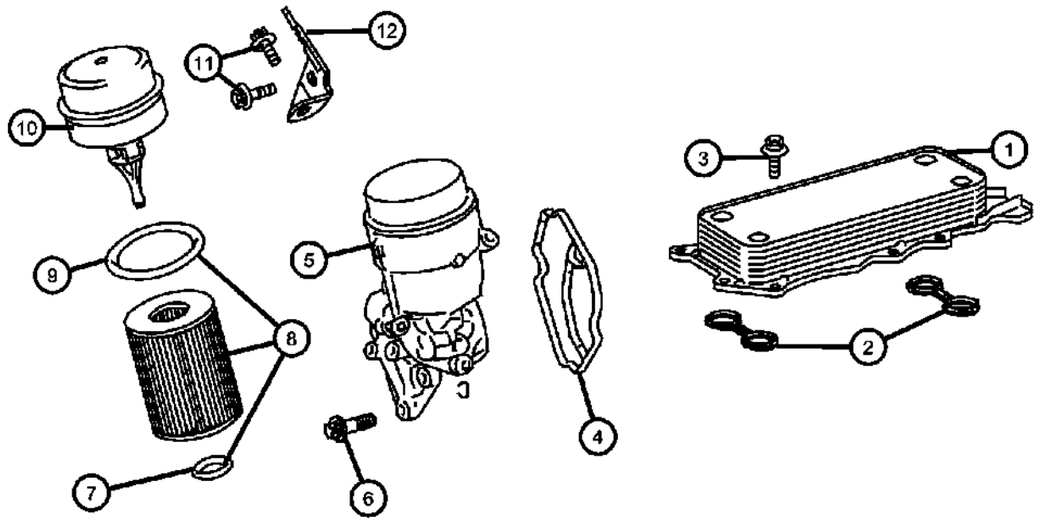

ITEM	PART NUMBER	QTY	LINE	SERIES	BODY	ENGINE	TRANS	TRIM	DESCRIPTION
NOTES: Sales Code [EXM] = 3.0L V6 Turbo Diesel Engine									
1	05179360AB	1	7, 2, 3, 6			EXM	DGZ		COOLER, Oil
2	05175579AA	2	2, 3, 6, 7			EXM	DGZ		GASKET, Oil Cooler to Cylinder Crankcase
3	05170732AA	10	2, 3, 6, 7			EXM	DGZ		SCREW, Oil Cooler to Cylinder Crankcase
4	05175574AA	1	2, 3, 6, 7			EXM	DGZ		GASKET, Oil Filter Housing, Oil Filter to Cylinder Crankcase
5	05175569AA	1	2, 3, 6, 7			EXM	DGZ		HOUSING, Oil Filter
6	05175577AA	4	2, 3, 6, 7			EXM	DGZ		BOLT, Oil Filter to Cylinder Crankcase M7x25 MK
7	05175573AA	1	2, 3, 6, 7			EXM	DGZ		O RING, Rod
8	05175571AA	1	2, 3, 6, 7			EXM	DGZ		FILTER, Engine Oil
9	05175572AA	1	2, 3, 6, 7			EXM	DGZ		O RING, On Cover
10	05175570AA	1	2, 3, 6, 7			EXM	DGZ		CAP, Oil Filter Housing
11	06104681AA	1	2, 3, 6, 7			EXM	DGZ		SCREW, Bracket to Oil Filter M6x15
12	05175847AA	1	2, 3, 6, 7			EXM	DGZ		BRACKET, Oil Filter to Cylinder Head
-13	05175847AA	1	2, 3, 6, 7			EXM	DGZ		BRACKET, Oil Filter To Cylinder Head

SPRINTER (VB)

SERIES	LINE	BODY	ENGINE	TRANSMISSION
L = LOWLINE	3 = HD DODGE 2WD 2 = Med. Duty DODGE 2WD	03 = CAB CHASSIS WHEEL BASE 3 05 = CAB CHASSIS WHEEL BASE 5 13 = 119 WB 53 = 119 WB 15 = VAN WHEEL BASE 5 55 = WAGON WHEEL BASE 5 17 = VAN WHEEL BASE 7	EG2 = 3.5L V6 Gas Engine EXM = 3.0L V6 Turbo Diesel Engine	DGZ = 5-Speed Auto W5A380 Transmission

Oil Filler Neck & Oil Indicator
Figure 3.0LD-HO-740

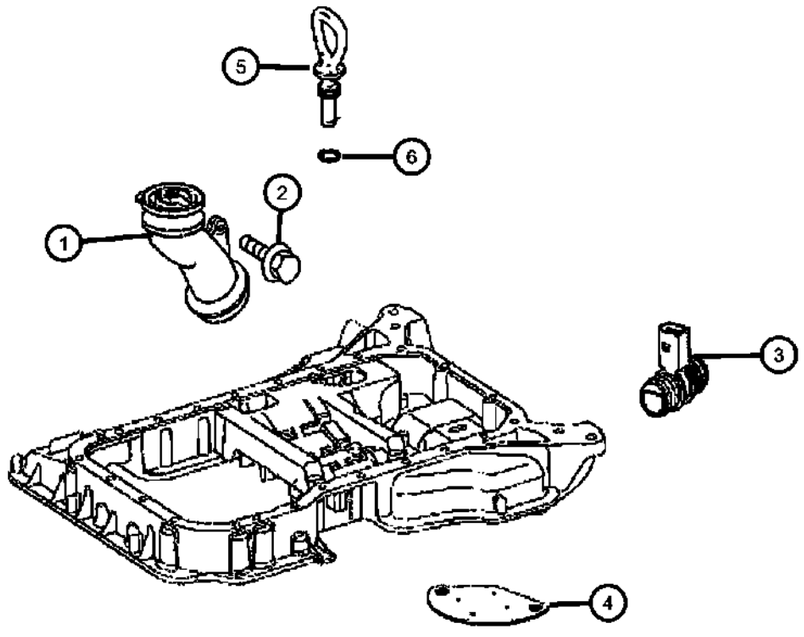

ITEM	PART NUMBER	QTY	LINE	SERIES	BODY	ENGINE	TRANS	TRIM	DESCRIPTION
1	68012402AA	1	2, 3, 6, 7			EXM	DGZ		HOUSING, Oil Fill
2	06104004AA	1	2, 3, 6, 7			EXM	DGZ		BOLT, [M6x16]
3	05117289AA	1	2, 3, 6, 7			EXM	DGZ		TUBE, Crankcase Vent Valve, Crankcase Breathing
4	05175810AA	1	2, 3, 6, 7			EXM	DGZ		COVER, Access Cover Crankcase
5	68006137AA	1	2, 3, 6, 7			EXM	DGZ		INDICATOR, Engine Oil Level
6	05073943AA	1	2, 3, 6, 7			EG2, EXM	DGZ		O RING

SPRINTER (VB)

SERIES	LINE	BODY	ENGINE	TRANSMISSION
L = LOWLINE	3 = HD DODGE 2WD 2 = Med. Duty DODGE 2WD	03 = CAB CHASSIS WHEEL BASE 3 05 = CAB CHASSIS WHEEL BASE 5 13 = 119 WB 53 = 119 WB 15 = VAN WHEEL BASE 5 55 = WAGON WHEEL BASE 5 17 = VAN WHEEL BASE 7	EG2 = 3.5L V6 Gas Engine EXM = 3.0L V6 Turbo Diesel Engine	DGZ = 5-Speed Auto W5A380 Transmission

Intake Manifold
Figure 3.0LD-HO-810

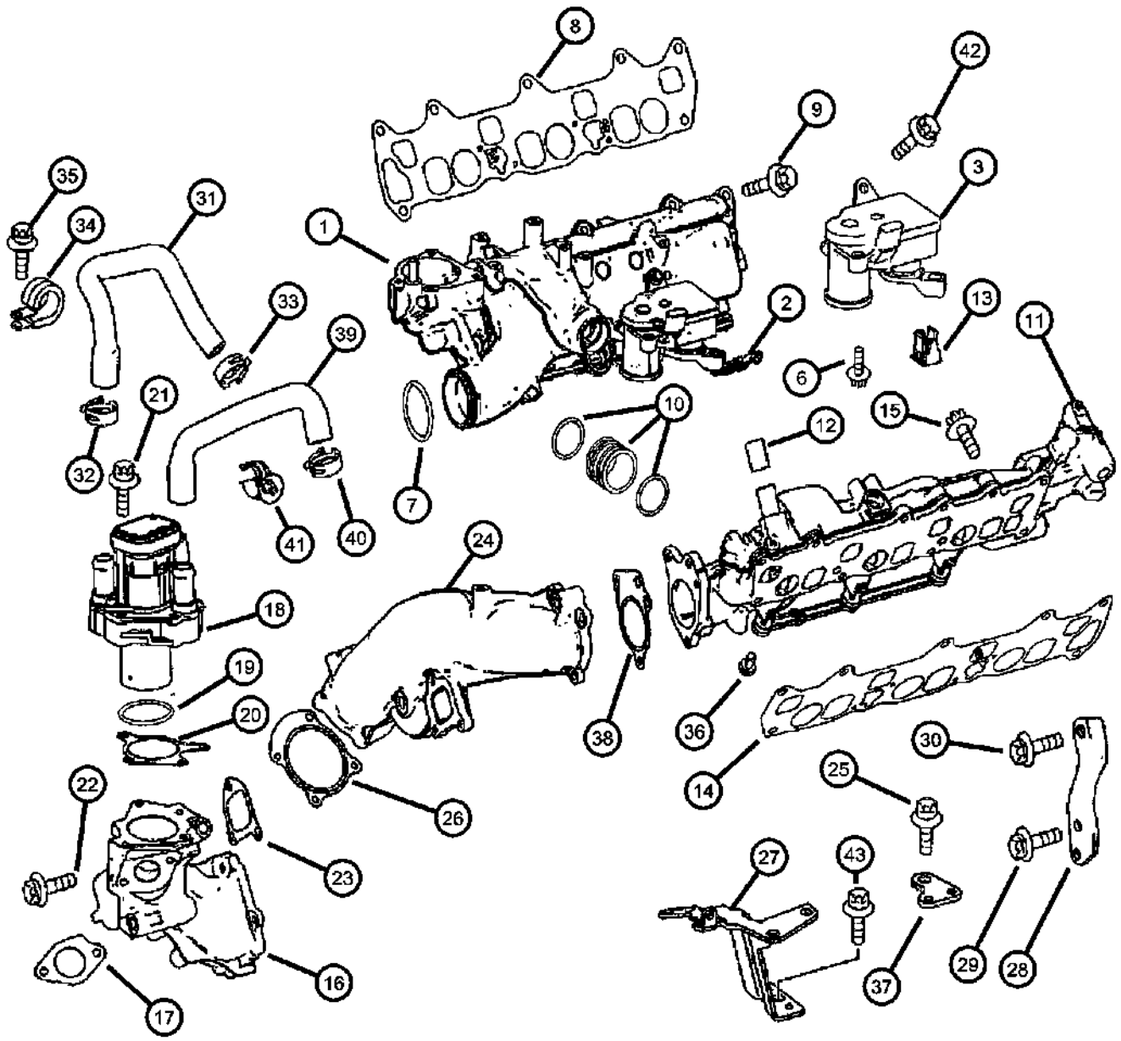

ITEM	PART NUMBER	QTY	LINE	SERIES	BODY	ENGINE	TRANS	TRIM	DESCRIPTION
NOTE:									
Sales Codes:									
[DGZ]=5 Speed Automatic Transmission [W5A380] - [Mercedes Benz]									
[EXM]=3.0L Turbo Diesel V-6 Engine									
1	68012303AA	1	2, 3, 6, 7			EXM	DGZ		MANIFOLD, IntakeRight
2	68001951AA	3	2, 3, 6, 7			EXM	DGZ		CLIP, Swirl Actuator
3	05175643AB	1	2, 3, 6, 7			EXM	DGZ		MOTOR
-4	68011814AA	1	2, 3, 6, 7			EXM	DGZ		CONNECTOR, [4 Pin] Connector For Setting Motor
-5	68011878AA	AR	2, 3, 6, 7			EG2, EXM	DGZ		TERMINAL, [0.22 - 0.5 MM2]
6	68012305AA	2	2, 3, 6, 7			EXM	DGZ		SCREW, [M6x12]
7	05175644AA	1	2, 3, 6, 7			EXM	DGZ		O RING
8	05175645AA	1	2, 3, 6, 7			EXM	DGZ		GASKET
9									BOLT
	05073688AB	2	2, 3, 6, 7			EXM	DGZ		Braket Mounting [M7x40]
	05073702AA	5	2, 3, 6, 7			EXM	DGZ		Charge Air Distributor Line To Head
	05125741AA	1	2, 3, 6, 7			EXM	DGZ		[M7x100]
	05175646AA	2	2, 3, 6, 7			EXM	DGZ		[M7x70]
10	05175668AA	1	2, 3, 6, 7			EXM	DGZ		SLEEVE, Insert
11	68012310AA	1	2, 3, 6, 7			EXM	DGZ		MANIFOLD, IntakeLeft
12	68028882AA	1	2, 3, 6, 7			EXM	DGZ		CONNECTOR
13	05175673AA	3	2, 3, 6, 7			EXM	DGZ		INSERT
14	05175645AA	1	2, 3, 6, 7			EXM	DGZ		GASKET
15									BOLT
	05073688AB	4	2, 3, 6, 7			EXM	DGZ		[M7X40]
	05073702AA	3	2, 3, 6, 7			EXM	DGZ		
	05175646AA	3	2, 3, 6, 7			EXM	DGZ		[M7x70]
16	68014081AA	1	2, 3, 6, 7			EXM	DGZ		HOUSING, Exhaust Gas Resirculation Valve
17	05175695AA	1	2, 3, 6, 7			EXM	DGZ		GASKET
18	68014083AA	1	2, 3, 6, 7			EXM	DGZ		VALVE, EGR
19	68001387AA	1	2, 3, 6, 7			EXM	DGZ		GASKET, EGR Valve, Exhaust Gas Recirculation Valve O-Ring
20	68014085AA	1	2, 3, 6, 7			EXM	DGZ		GASKET, Valve To Housing

SPRINTER (VB)

SERIES	LINE	BODY	ENGINE	TRANSMISSION
L = LOWLINE	3 = HD DODGE 2WD 2 = Med. Duty DODGE 2WD	03 = CAB CHASSIS WHEEL BASE 3 05 = CAB CHASSIS WHEEL BASE 5 13 = 119 WB 53 = 119 WB 15 = VAN WHEEL BASE 5 55 = WAGON WHEEL BASE 5 17 = VAN WHEEL BASE 7	EG2 = 3.5L V6 Gas Engine EXM = 3.0L V6 Turbo Diesel Engine	DGZ = 5-Speed Auto W5A380 Transmission

Intake Manifold
Figure 3.0LD-HO-810

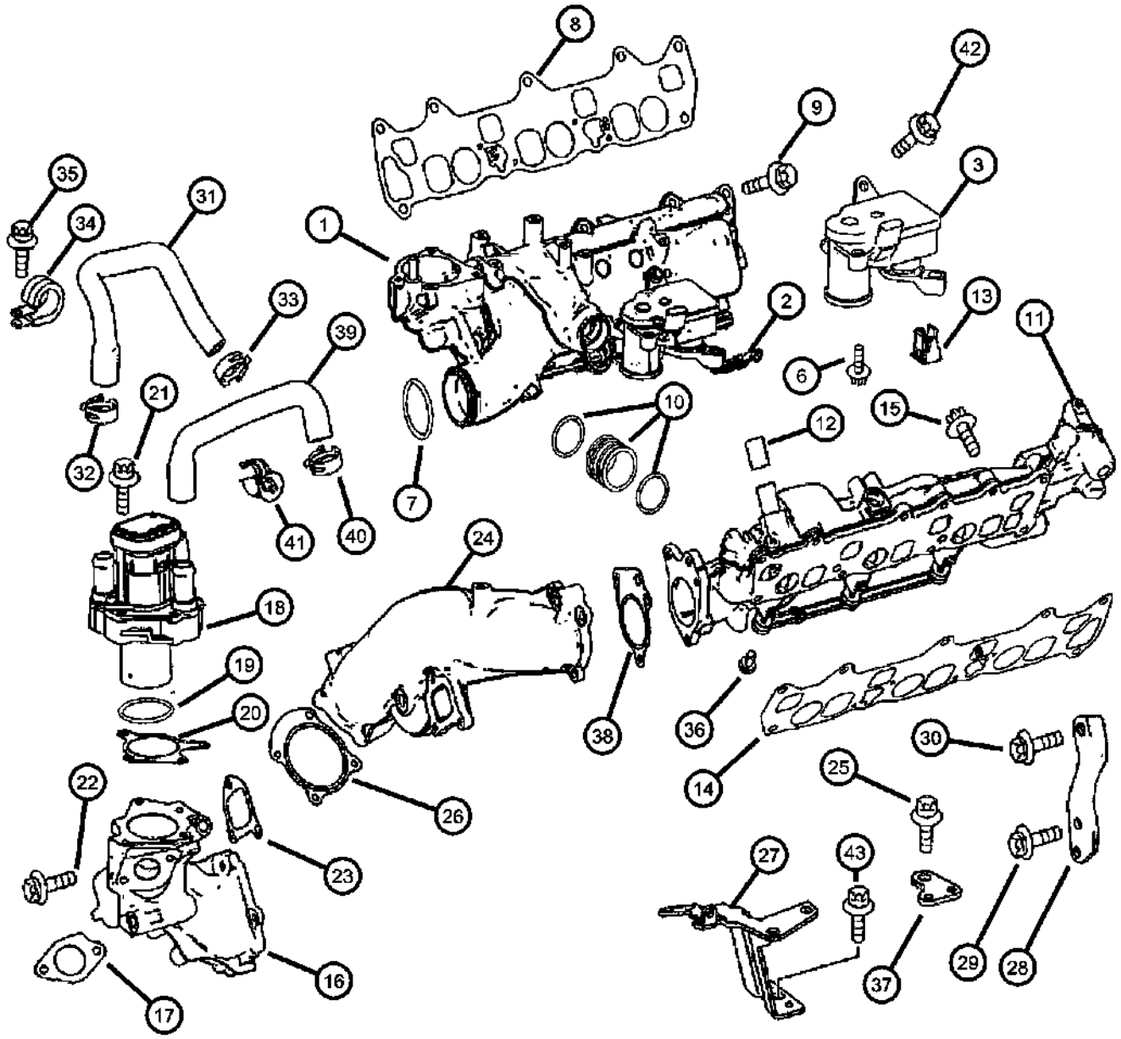

ITEM	PART NUMBER	QTY	LINE	SERIES	BODY	ENGINE	TRANS	TRIM	DESCRIPTION
21									SCREW
	06104010AA	4	2, 3, 6, 7			EXM	DGZ		Valve To Housing [M6x40]
	06104683AA	2	2, 3, 6, 7			EXM	DGZ		Valve To Distribution Line [M6x23]
22	06104008AA	3	2, 3, 6, 7			EXM	DGZ		SCREW, Valve Body To Charge Air Cross Pipe [M6x30]
23	68014086AA	1	2, 3, 6, 7			EXM	DGZ		GASKET
24	68012320AA	1	2, 3, 6, 7			EXM	DGZ		MANIFOLD, Intake
25	06104032AA	1	2, 3, 6, 7			EXM	DGZ		SCREW, [M8x65]
26	68012326AA	1	2, 3, 6, 7			EXM	DGZ		GASKET
27	68012327AA	1	2, 3, 6, 7			EXM	DGZ		BRACKET
28	68014087AA	1	2, 3, 6, 7			EXM	DGZ		BRACKET
29	06104006AA	2	2, 3, 6, 7			EXM	DGZ		BOLT, [M6x20]
30	06104028AA	1	2, 3, 6, 7			EXM	DGZ		SCREW, [M8x45]
31	68014088AA	1	2, 3, 6, 7			EXM	DGZ		HOSE
32	06104804AA	1	2, 3, 6, 7			EXM	DGZ		CLAMP
33	68004905AA	1	2, 3, 6, 7			EG2, EXM	DGZ		CLAMP
34	05132913AA	1	2, 3, 6, 7			EXM	DGZ		CLAMP
35	06104005AA	1	3, 7			EXM	DGZ		BOLT, [M6x16]
36	68001951AA	3	2, 3, 6, 7			EXM	DGZ		CLIP, Swirl Actuator
37	68012324AA	1	2, 3, 6, 7			EXM	DGZ		BRACKET, Air Duct
38	68012321AA	1	2, 3, 6, 7			EXM	DGZ		GASKET
39	68014091AA	1	6, 7, 2, 3			EXM	DGZ		HOSE, HOSE
40	68004905AA	1	2, 3, 6, 7			EG2, EXM	DGZ		CLAMP
41	68014090AA	1	2, 3, 6, 7			EXM	DGZ		CLIP, CLIP
42	06104683AA	3	2, 3, 6, 7			EXM	DGZ		SCREW, [M6x23]
43	06104004AA	1	2, 3, 6, 7			EXM	DGZ		BOLT, [M6x12]

SPRINTER (VB)

SERIES	LINE	BODY	ENGINE	TRANSMISSION
L = LOWLINE	3 = HD DODGE 2WD 2 = Med. Duty DODGE 2WD	03 = CAB CHASSIS WHEEL BASE 3 05 = CAB CHASSIS WHEEL BASE 5 13 = 119 WB 53 = 119 WB 15 = VAN WHEEL BASE 5 55 = WAGON WHEEL BASE 5 17 = VAN WHEEL BASE 7	EG2 = 3.5L V6 Gas Engine EXM = 3.0L V6 Turbo Diesel Engine	DGZ = 5-Speed Auto W5A380 Transmission

AR = use ase required - = Non illustrrated part

<< RETURN TO GROUP INDEX

Intake Manifold Crossover
Figure 3.0LD-HO-820

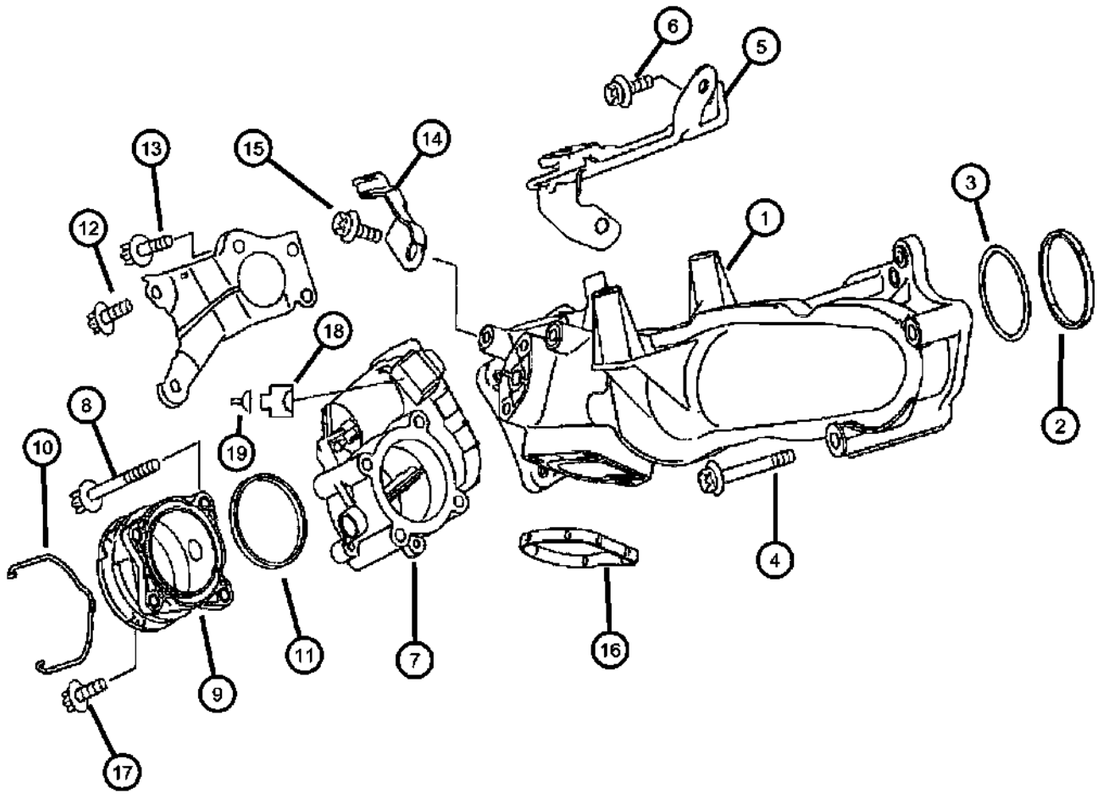

ITEM	PART NUMBER	QTY	LINE	SERIES	BODY	ENGINE	TRANS	TRIM	DESCRIPTION
NOTE:									
Sales Codes:									
[DGZ]=5 Speed Automatic Transmission [W5A380] - [Mercedes Benz]									
[EXM]=3.0L Turbo Diesel V-6 Engine									
1	68012320AA	1	2, 3, 6, 7			EXM	DGZ		MANIFOLD, Intake, Crossover Pipe
2	05175710AA	1	2, 3, 6, 7			EXM	DGZ		O RING
3	68012321AA	1	2, 3, 6, 7			EXM	DGZ		GASKET
4									SCREW
	06104018AA	1	2, 3, 6, 7			EXM	DGZ		[M6x90]
	06104188AA	1	2, 3, 6, 7			EXM	DGZ		[M6x55]
5	68012324AA	1	2, 3, 6, 7			EXM	DGZ		BRACKET, Air Duct
6	06104032AA	1	2, 3, 6, 7			EXM	DGZ		SCREW, [M8x65]
7	68012325AA	1	2, 3, 6, 7			EXM	DGZ		THROTTLE BODY, Service Manual Name [EGR] Airflow Valve
8									SCREW
	05175723AA	3	7, 2, 3, 6			EXM	DGZ		[M5x80]
	05175726AA	1	2, 3, 6, 7			EXM	DGZ		[M5x90]
9	05175728AA	1	2, 3, 6, 7			EXM	DGZ		FLANGE, Intake throttle
10	05080315AA	1	2, 3, 6, 7			EXM	DGZ		SPRING
11	05175729AA	1	2, 3, 6, 7			EXM	DGZ		GASKET
12	06104683AA	3	3, 7			EXM	DGZ		SCREW, [M6x23]
13	06104005AA	2	2, 3, 6, 7			EXM	DGZ		BOLT, [M6x16]
14	68012389AA	1	2, 3, 6, 7			EXM	DGZ		BRACKET
15	06104004AA	1	2, 3, 6, 7			EXM	DGZ		BOLT, [M6x12]
16	05175712AA	1	2, 3, 6, 7			EXM	DGZ		GASKET
17	06104683AA	3	2, 3, 6, 7			EXM	DGZ		SCREW, [M6x23]
18	05143912AA	1	2, 3, 6, 7			EXM	DGZ		CONNECTOR
19	05138911AA	AR	2, 3, 6, 7			EXM	DGZ		TERMINAL, [.05-.075 MM]
-20	05138038AA	1	2, 3, 6, 7						PLUG, [S33] Connector
-21	05120860AA	1	2, 3, 6, 7			EG2, EXM	DGZ		GASKET, [1.6-1.9MM / MM2] [S33] Connector

SPRINTER (VB)

SERIES	LINE	BODY	ENGINE	TRANSMISSION
L = LOWLINE	3 = HD DODGE 2WD 2 = Med. Duty DODGE 2WD	03 = CAB CHASSIS WHEEL BASE 3 05 = CAB CHASSIS WHEEL BASE 5 13 = 119 WB 53 = 119 WB 15 = VAN WHEEL BASE 5 55 = WAGON WHEEL BASE 5 17 = VAN WHEEL BASE 7	EG2 = 3.5L V6 Gas Engine EXM = 3.0L V6 Turbo Diesel Engine	DGZ = 5-Speed Auto W5A380 Transmission

AR = use ase required - = Non illustrrated part

<< RETURN TO GROUP INDEX

Exhaust Manifold
Figure 3.0LD-HO-830

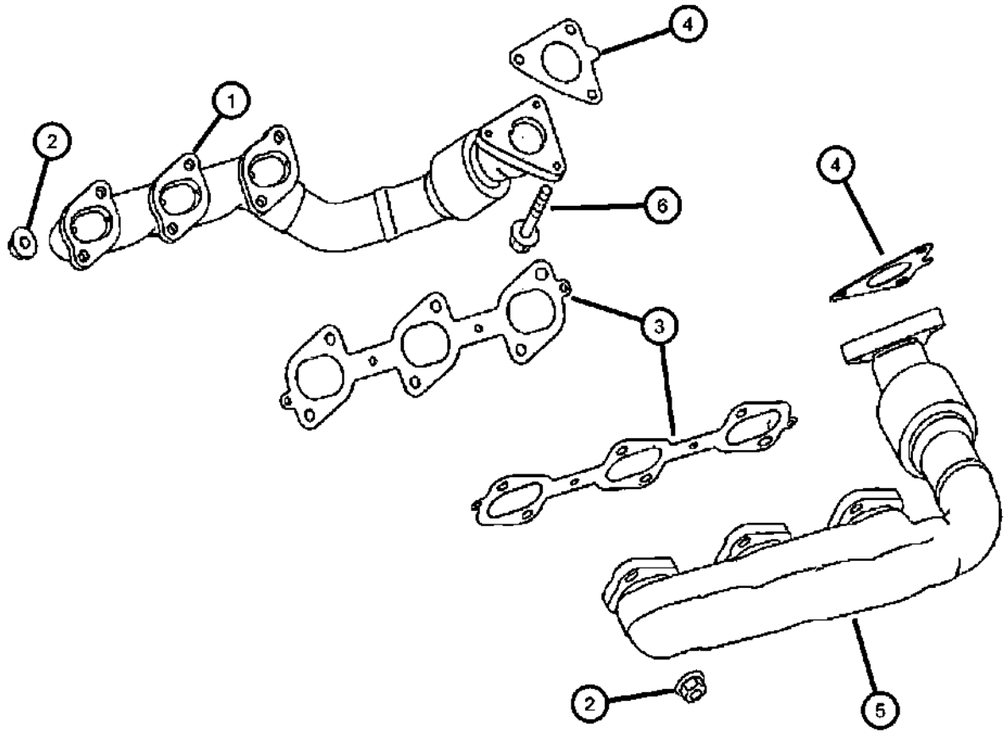

ITEM	PART NUMBER	QTY	LINE	SERIES	BODY	ENGINE	TRANS	TRIM	DESCRIPTION

NOTE:
Sales Codes:
[DGZ]=5 Speed Automatic Transmission [W5A380] - [Mercedes Benz]
[EXM]=3.0L Turbo Diesel V-6 Engine

1	05175746AA	1	2, 3, 6, 7			EXM	DGZ		MANIFOLD, ExhaustRight
2	06104729AA	6	2, 3, 6, 7			EXM	DGZ		NUT
3	05175748AA	2	2, 3, 6, 7			EXM	DGZ		GASKET, Exhaust ManifoldRight & Left
4	05175751AA	1	2, 3, 6, 7			EXM	DGZ		GASKET, Exhaust manifold, To exhaust collector
5	05175747AA	1	2, 3, 6, 7			EXM	DGZ		MANIFOLD, ExhaustLeft
6	05073720AC	3	2, 3, 6, 7			EXM	DGZ		SCREW

SPRINTER (VB)

SERIES	LINE	BODY	ENGINE	TRANSMISSION
L = LOWLINE	3 = HD DODGE 2WD 2 = Med. Duty DODGE 2WD	03 = CAB CHASSIS WHEEL BASE 3 05 = CAB CHASSIS WHEEL BASE 5 13 = 119 WB 53 = 119 WB 15 = VAN WHEEL BASE 5 55 = WAGON WHEEL BASE 5 17 = VAN WHEEL BASE 7	EG2 = 3.5L V6 Gas Engine EXM = 3.0L V6 Turbo Diesel Engine	DGZ = 5-Speed Auto W5A380 Transmission

Exhaust Gas Recirculation Cooler
Figure 3.0LD-HO-840

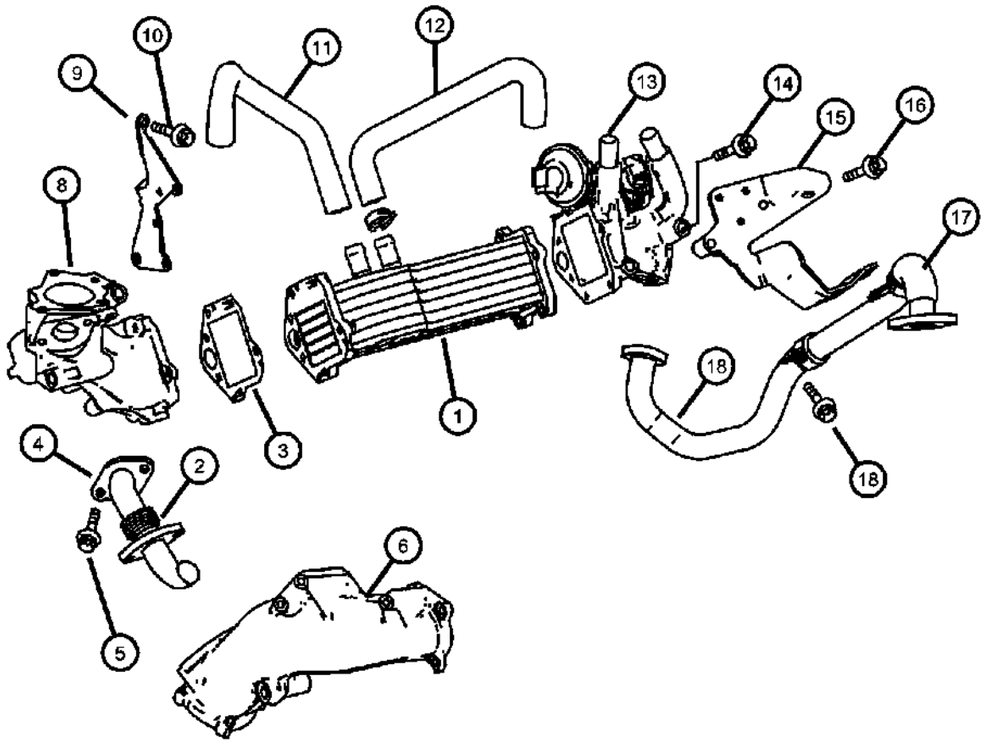

ITEM	PART NUMBER	QTY	LINE	SERIES	BODY	ENGINE	TRANS	TRIM	DESCRIPTION
NOTES:									
Sales Code									
[EXM] = 3.0L V6 Turbo Diesel Engine									
1	68014095AA	1	2, 3, 6, 7			EXM	DGZ		COOLER
2	68012322AA	1	2, 3, 6, 7			EXM	DGZ		TUBE
3	68014096AA	1	2, 3, 6, 7			EXM	DGZ		GASKET
4	05175695AA	1	2, 3, 6, 7			EXM	DGZ		GASKET
5	06104682AA	2	2, 3, 6, 7			EXM	DGZ		BOLT, [M6x19]
6	68012320AA	1	2, 3, 6, 7			EXM	DGZ		MANIFOLD, Intake, Transverse Tube Charge Air Pipe
-7	68012326AA	1	2, 3, 6, 7			EXM	DGZ		GASKET
8	68014081AA	1	2, 3, 6, 7			EXM	DGZ		HOUSING
9	68014098AA	1	2, 3, 6, 7			EXM	DGZ		BRACKET
10	05137660AA	2	2, 3, 6, 7			EXM	DGZ		SCREW
11	68014092AA	1	2, 3, 6, 7			EXM	DGZ		HOSE
12	68014093AA	1	2, 3, 6, 7			EXM	DGZ		HOSE
13	68014099AA	1	2, 3, 6, 7			EXM	DGZ		VALVE
14	06104036AA	2	2, 3, 6, 7			EXM	DGZ		SCREW
15	68014097AA	1	2, 3, 6, 7			EXM	DGZ		BRACKET
16	06104005AA	3	2, 3, 6, 7			EXM	DGZ		BOLT
17	68014094AA	1	2, 3, 6, 7			EXM	DGZ		TUBE
18	06104004AA	2	2, 3, 6, 7			EXM	DGZ		BOLT

SPRINTER (VB)

SERIES	LINE	BODY	ENGINE	TRANSMISSION
L = LOWLINE	3 = HD DODGE 2WD 2 = Med. Duty DODGE 2WD	03 = CAB CHASSIS WHEEL BASE 3 05 = CAB CHASSIS WHEEL BASE 5 13 = 119 WB 53 = 119 WB 15 = VAN WHEEL BASE 5 55 = WAGON WHEEL BASE 5 17 = VAN WHEEL BASE 7	EG2 = 3.5L V6 Gas Engine EXM = 3.0L V6 Turbo Diesel Engine	DGZ = 5-Speed Auto W5A380 Transmission

Turbocharger
Figure 3.0LD-HO-850

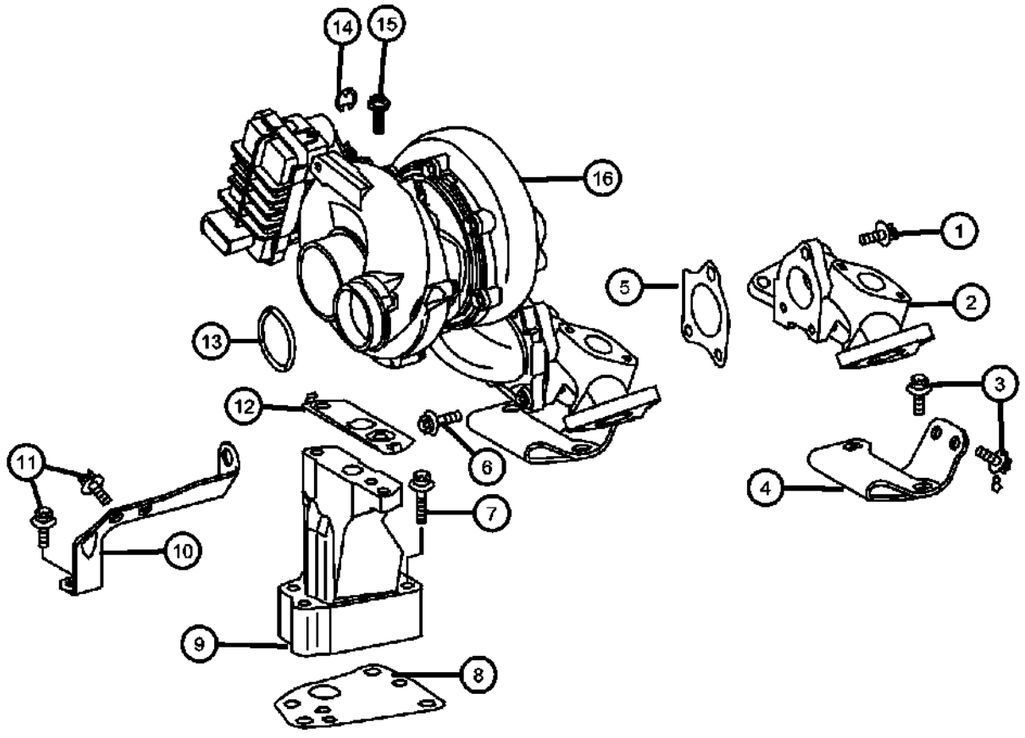

ITEM	PART NUMBER	QTY	LINE	SERIES	BODY	ENGINE	TRANS	TRIM	DESCRIPTION
NOTES:									
Sales Code									
[EXM] = 3.0L V6 Turbo Diesel Engine									
1	05073720AC	3	2, 3, 6, 7			EXM	DGZ		SCREW, Turbocharger to Exhaust Manifold
2	68004669AA	1	2, 3, 6, 7			EXM	DGZ		MANIFOLD
3	05073720AC	2	3, 6, 7, 2			EXM	DGZ		SCREW, Support Brace to Collector
4	68012295AA	1	2, 3, 6, 7			EXM	DGZ		BRACKET
5	05175629AA	1	2, 3, 6, 7			EXM	DGZ		GASKET, Turbocharger
6	05073720AC	2	2, 3, 6, 7			EXM	DGZ		SCREW, Bracket Mounting
7	05133207AA	4	2, 3, 6, 7			EXM	DGZ		BOLT, Support to Cylinder Crankcase M8x55
8	05175632AA	1	2, 3, 6, 7			EXM	DGZ		GASKET, Turbocharger
9	05175627AA	1	2, 3, 6, 7			EXM	DGZ		BRACKET, Turbo Charger
10	68012302AA	1	2, 3, 6, 7			EXM	DGZ		BRACKET
11	06104005AA	4	2, 3, 6, 7			EXM	DGZ		BOLT, Stay to Charge Air Distributor Line M6x16
12	05175630AA	1	2, 3, 6, 7			EXM	DGZ		GASKET, Turbocharger, Stay to Cylinder Head
13	05175626AA	1	2, 3, 6, 7			EXM	DGZ		O RING
14	05183127AA	2	2, 3, 6, 7			EXM	DGZ		RETAINING RING
15	05073710AA	2	2, 3, 6, 7			EXM	DGZ		SCREW, Turbocharger on Support
16	68019589AA	1	2, 3, 6, 7			EXM	DGZ		TURBOCHARGER

SPRINTER (VB)

SERIES	LINE	BODY	ENGINE	TRANSMISSION
L = LOWLINE	3 = HD DODGE 2WD 2 = Med. Duty DODGE 2WD	03 = CAB CHASSIS WHEEL BASE 3 05 = CAB CHASSIS WHEEL BASE 5 13 = 119 WB 53 = 119 WB 15 = VAN WHEEL BASE 5 55 = WAGON WHEEL BASE 5 17 = VAN WHEEL BASE 7	EG2 = 3.5L V6 Gas Engine EXM = 3.0L V6 Turbo Diesel Engine	DGZ = 5-Speed Auto W5A380 Transmission

Engine Breathing
Figure 3.0LD-HO-910

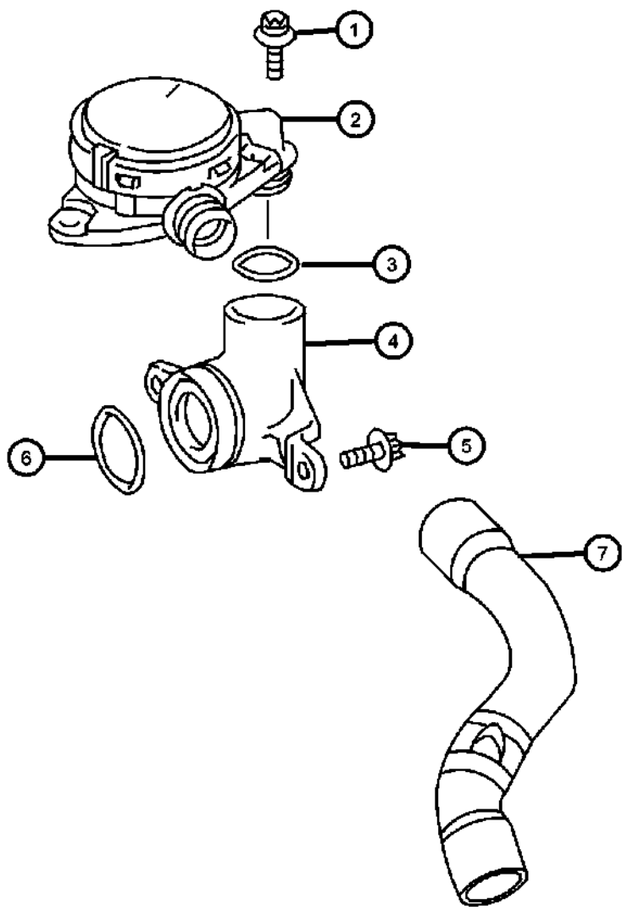

ITEM	PART NUMBER	QTY	LINE	SERIES	BODY	ENGINE	TRANS	TRIM	DESCRIPTION
NOTES:									
Sales Code:									
[EXM] = 3.0L V6 Turbo Diesel Engine									
1	06104682AA	3	2, 3, 6, 7			EXM	DGZ		BOLT, Valve to Cylinder Head Cover M6x19
2	68014022AA	1	2, 3, 6, 7			EXM	DGZ		VALVE, PCV, Pressure Control Valve-ZJ9
3	05175515AA	1	2, 3, 6, 7			EXM	DGZ		O RING
4	05175512AA	1	2, 3, 6, 7			EXM	DGZ		COVER
5	06104005AA	2	2, 3, 6, 7			EXM	DGZ		BOLT, Cover at Cylinder Head M6x16
6	05175513AA	1	2, 3, 6, 7			EXM	DGZ		O RING
7	68014024AA	1	2, 3, 6, 7			EXM	DGZ		HOSE, Pressure Valve to Intake Pipe

SPRINTER (VB)

SERIES	LINE	BODY	ENGINE	TRANSMISSION
L = LOWLINE	3 = HD DODGE 2WD 2 = Med. Duty DODGE 2WD	03 = CAB CHASSIS WHEEL BASE 3 05 = CAB CHASSIS WHEEL BASE 5 13 = 119 WB 53 = 119 WB 15 = VAN WHEEL BASE 5 55 = WAGON WHEEL BASE 5 17 = VAN WHEEL BASE 7	EG2 = 3.5L V6 Gas Engine EXM = 3.0L V6 Turbo Diesel Engine	DGZ = 5-Speed Auto W5A380 Transmission

Group - 11

Exhaust

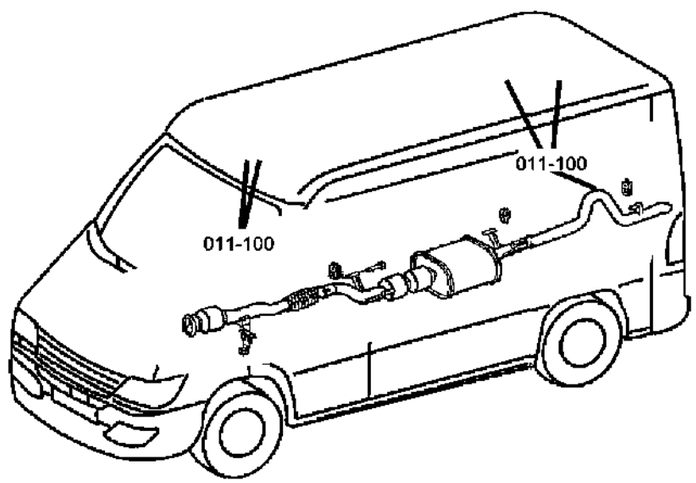

Illustration Title — Group-Fig. No.

Exhaust System
Exhaust System / Van / Wagon ..... Fig. 11 - 105
Exhaust System / Van / Wagon ..... Fig. 11 - 115
Exhaust System / Cab Chassis ..... Fig. 11 - 120
Exhaust System / Cab Chassis ..... Fig. 11 - 125

Heat Shields
Heat Shields ..... Fig. 11 - 210

011-100 Exhaust System 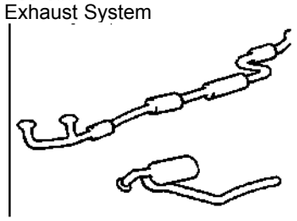	**011-200** Heat Shields 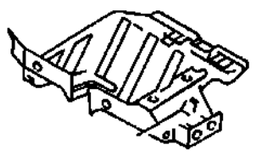		

Exhaust System / Van / Wagon
Figure 11-105

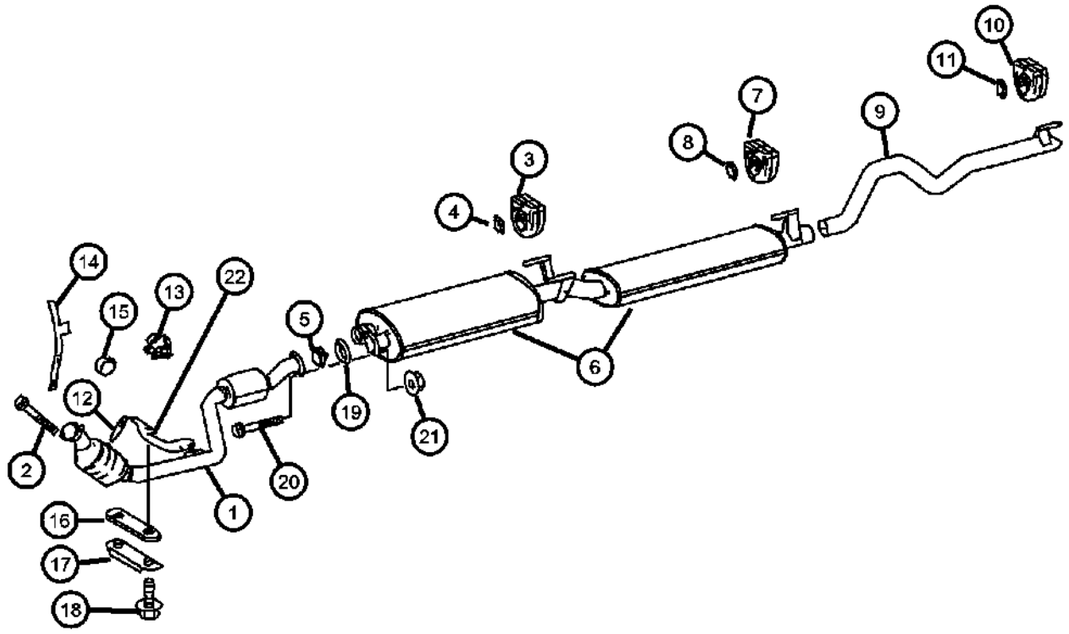

ITEM	PART NUMBER	QTY	LINE	SERIES	BODY	ENGINE	TRANS	TRIM	DESCRIPTION
1									EXHAUST
	68011980AA	1	2, 3, 6, 7	L		EG2	DGZ		Left
	68011987AA	1	2, 3, 6, 7	L		EG2	DGZ		Right
2	05096743AA	4	2, 6	L	13, 15, 17, 53, 55	EG2	DGZ		SCREW, Converter to Manifold, Exhaust To Exhaust Manifold
3	05104109AA	4	2, 6	L	13, 15, 17, 53, 55	EG2	DGZ		INSULATOR, Exhaust
4	05134656AA	2	2, 6	L	13, 15, 17, 53, 55	EG2	DGZ		BOLT, M8, Lock Nut
5									SEAL, Exhaust
	68012078AA	1	2, 3	L		EG2	DGZ		Muffler Intake, Left
	68028791AA	1	2, 3, 6, 7	L		EG2	DGZ		Muffler Intake, Right
6	68012005AA	1	2, 6	L	13, 15, 17, 53, 55	EG2	DGZ		MUFFLER, Exhaust
7	05104109AA	1	2, 6	L	13, 15, 17, 53, 55	EG2	DGZ		INSULATOR, Exhaust
8	05134656AA	1	2, 6	L	53, 55, 13, 15, 17	EG2	DGZ		BOLT, M8, Lock Nut
9									TAILPIPE, Exhaust
	68012013AA	1	2, 6	L	15, 17, 55	EG2	DGZ		
	68012016AA	1	2, 6	L	13, 53	EG2	DGZ		
10	05104109AA	1	2, 6	L	13, 15, 17, 53, 55	EG2	DGZ		INSULATOR, Exhaust
11	05134656AA	1	2, 6	L	13, 15, 17, 53, 55	EG2	DGZ		BOLT, M8, Lock Nut
12									SENSOR, Oxygen
	05135667AA	1	2, 6	L	13, 15, 17, 53, 55	EG2	DGZ		Up Stream, Left
	68012050AA	1	2, 3, 6, 7	L		EG2	DGZ		Up Stream, Right
	68012058AA	2	2, 3, 6, 7	L		EG2	DGZ		Downstream
13	68012056AA	4	2, 3, 6, 7	L		EG2	DGZ		CLAMP, Oxygen Sensor Clip
14									BRACKET
	68012059AA	1	2, 3, 6, 7	L		EG2	DGZ		Oxygen Sensor Bracket At Transmission, Left
	68012060AA	1	2, 3, 6, 7	L		EG2	DGZ		Oxygen Sensor Bracket At Transmission, Right
15	68011872AA	3	2, 3, 6, 7	L		EG2	DGZ		CLIP, Oxygen Sensor Clip
16	68012076AA	2	2, 3, 6, 7	L		EG2, EXM	DGZ		BRACKET, Base To Transmission

SPRINTER (VB)

SERIES	LINE	BODY	ENGINE	TRANSMISSION
L = LOWLINE	3 = HD DODGE 2WD 2 = Med. Duty DODGE 2WD	03 = CAB CHASSIS WHEEL BASE 3 05 = CAB CHASSIS WHEEL BASE 5 13 = 119 WB 53 = 119 WB 15 = VAN WHEEL BASE 5 55 = WAGON WHEEL BASE 5 17 = VAN WHEEL BASE 7	EG2 = 3.5L V6 Gas Engine EXM = 3.0L V6 Turbo Diesel Engine	DGZ = 5-Speed Auto W5A380 Transmission

Exhaust System / Van / Wagon
Figure 11-105

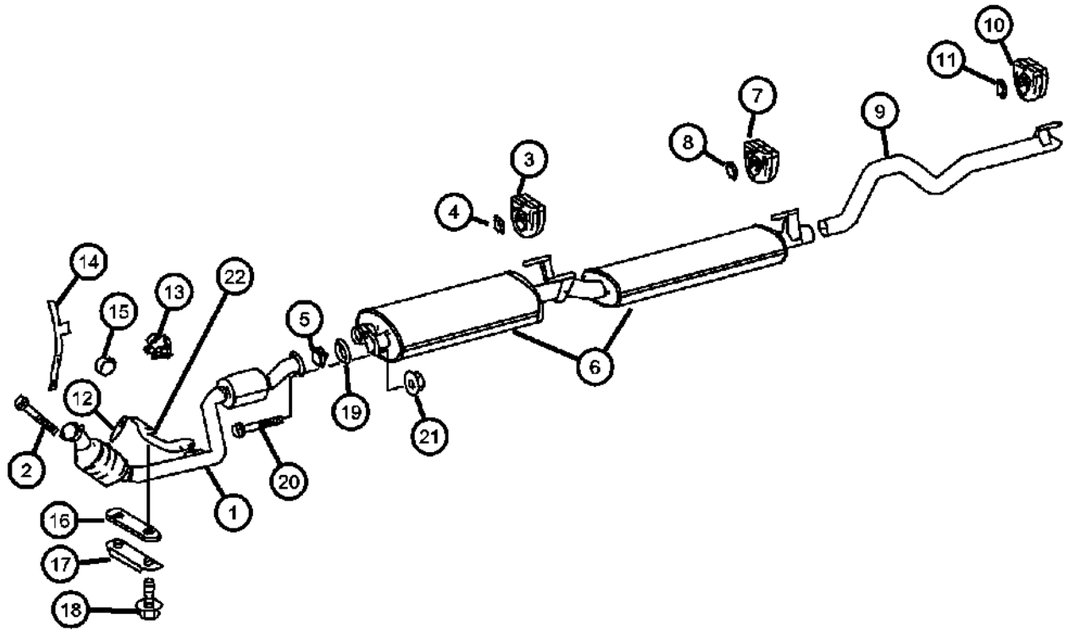

ITEM	PART NUMBER	QTY	LINE	SERIES	BODY	ENGINE	TRANS	TRIM	DESCRIPTION
17	68012077AA	1	2, 3, 6, 7	L		EG2, EXM	DGZ		BRACKET
18	06104025AA	2	2, 3, 6, 7	L	13, 15, 17, 53, 55	EG2, EXM	DGZ		SCREW, Hex Flange Head, M8X1.25X30.0
19	68012079AA	1	2, 3, 6, 7	L		EG2	DGZ		FLANGE, Exhaust Pipe
20	05125722AA	3	2, 3, 6, 7	L		EG2	DGZ		SCREW, SCREW, Flange To Exhaust Muffler
21	05126237AA	3	2, 3, 6, 7	L	03, 05, 13, 15, 17	EG2, EXM	DGZ		NUT, Hex, Flange To Exhaust Muffler
22									BRACKET
	68012082AA	1	2, 3, 6, 7	L		EG2	DGZ		Exhaust Pipe To Transmission, Left
	68012083AA	1	2, 3, 6, 7	L		EG2	DGZ		Exhaust Pipe To Transmission, Right

SPRINTER (VB)

SERIES	LINE	BODY	ENGINE	TRANSMISSION
L = LOWLINE	3 = HD DODGE 2WD 2 = Med. Duty DODGE 2WD	03 = CAB CHASSIS WHEEL BASE 3 05 = CAB CHASSIS WHEEL BASE 5 13 = 119 WB 53 = 119 WB 15 = VAN WHEEL BASE 5 55 = WAGON WHEEL BASE 5 17 = VAN WHEEL BASE 7	EG2 = 3.5L V6 Gas Engine EXM = 3.0L V6 Turbo Diesel Engine	DGZ = 5-Speed Auto W5A380 Transmission

Exhaust System / Van / Wagon
Figure 11-115

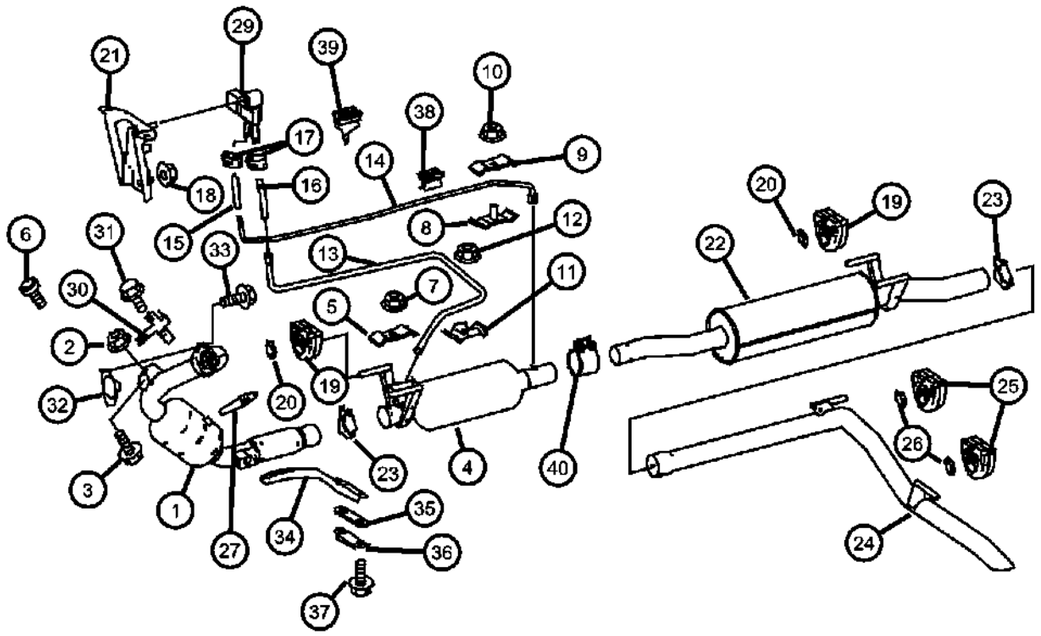

ITEM	PART NUMBER	QTY	LINE	SERIES	BODY	ENGINE	TRANS	TRIM	DESCRIPTION
1	68011935AA	1	2, 3, 6, 7	L	13, 15, 17, 53, 55	EXM	DGZ		EXHAUST
2	06104709AA	2	2, 3, 6, 7	L	13, 15, 17, 53, 55	EG2, EXM	DGZ		NUT, Hex Flange, M8x1.25, Exhaust To Cylinder Head
3	05073723AB	1	2, 3, 6, 7	L	13, 15, 17, 53, 55	EXM	DGZ		SCREW, Exhaust To Cylinder Head
4	68011959AA	1	2, 3, 6, 7	L		EXM	DGZ		FILTER ASSY, DIESEL PARTICULATE
5	68011970AA	2	2, 3, 6, 7	L	17, 53, 55, 13, 15	EXM	DGZ		BRACKET, Exhaust
6	06104005AA	3	2, 3, 6, 7	L	13, 15, 17, 53, 55	EXM	DGZ		BOLT, 6 Lobe External Head, M6X1.00X16.00, Bracket To Cylinder Head
7	68004878AA	2	2, 3, 6, 7	L	13, 15, 17, 53, 55	EG2, EXM	DGZ		NUT
8	68011971AA	1	2, 3, 6, 7	L		EXM	DGZ		BRACKET, Hose
9	68011970AA	2	2, 3, 6, 7	L	13, 15, 17, 53, 55	EXM	DGZ		BRACKET, Exhaust
10	68004878AA	2	2, 3, 6, 7	L	13, 15, 17, 53, 55	EG2, EXM	DGZ		NUT
11	68011972AA	1	2, 3, 6, 7	L		EXM	DGZ		BRACKET, Hose
12	68004878AA	2	2, 3, 6, 7	L	13, 15, 17, 53, 55	EG2, EXM	DGZ		NUT
13	68011973AA	1	2, 3, 6, 7	L		EXM	DGZ		HOSE, Delivery Line To Particulate Filter
14	68005200AA	1	2, 3, 6, 7	L		EXM	DGZ		HOSE, Delivery Line To Particulate Filter
15	68011975AA	1	2, 3, 6, 7	L		EXM	DGZ		HOSE
16	68011976AA	1	2, 3, 6, 7	L		EXM	DGZ		HOSE
17	05080439AB	2	2, 3, 6, 7	L	13, 15, 17, 53, 55	EXM	DGZ		CLAMP
18	68004878AA	2	2, 3, 6, 7	L	13, 15, 17, 53, 55	EG2, EXM	DGZ		NUT
19	05104109AA	4	3, 7	L	13, 15, 17, 53, 55	EXM	DGZ		INSULATOR, Exhaust
20	05134656AA	4	3, 7	L	53, 55, 13, 15, 17	EXM	DGZ		BOLT, M8, Lock Nut
21	68011977AA	1	2, 3, 6, 7	L	13, 15, 17, 53, 55	EXM	DGZ		BRACKET, Exhaust
22									MUFFLER, Exhaust
	68011992AA	1	2, 3, 6, 7	L		EXM	DGZ		With [NEP]
	68011993AA	1	2, 3, 6, 7	L	13, 15, 17, 53, 55	EXM	DGZ		

SPRINTER (VB)

SERIES	LINE	BODY	ENGINE	TRANSMISSION
L = LOWLINE	3 = HD DODGE 2WD 2 = Med. Duty DODGE 2WD	03 = CAB CHASSIS WHEEL BASE 3 05 = CAB CHASSIS WHEEL BASE 5 13 = 119 WB 53 = 119 WB 15 = VAN WHEEL BASE 5 55 = WAGON WHEEL BASE 5 17 = VAN WHEEL BASE 7	EG2 = 3.5L V6 Gas Engine EXM = 3.0L V6 Turbo Diesel Engine	DGZ = 5-Speed Auto W5A380 Transmission

Exhaust System / Van / Wagon
Figure 11-115

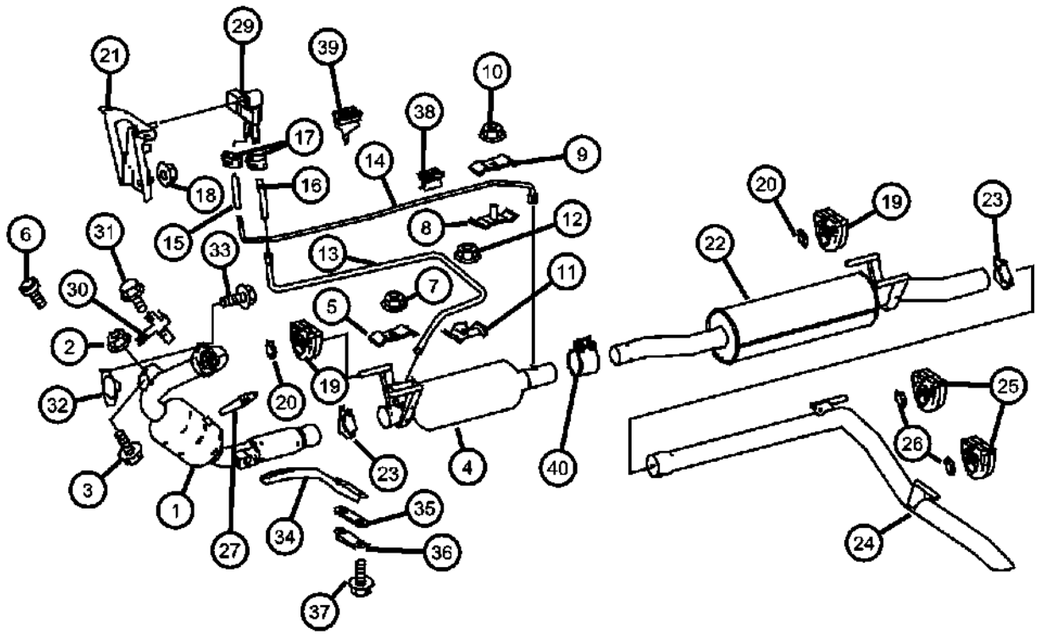

ITEM	PART NUMBER	QTY	LINE	SERIES	BODY	ENGINE	TRANS	TRIM	DESCRIPTION
23	68012004AA	1	2, 3, 6, 7	L		EXM	DGZ		CLAMP
24									TAILPIPE, Exhaust
	68012012AA	1	2, 6	L	15, 17, 55	EXM	DGZ		
	68012015AA	1	2, 6	L	13, 53	EXM	DGZ		
	68012018AA	1	3, 7	L	15	EXM	DGZ		
	68012022AA	1	3, 7	L	13	EXM	DGZ		
	68012024AA	1	3, 7	L	17	EXM	DGZ		
25	05104109AA	4	3, 7	L	13, 15, 53, 55, 17	EXM	DGZ		INSULATOR, Exhaust
26									BOLT, M8
	05134656AA	1	2, 3, 6, 7	L	13, 53	EXM	DGZ		Lock Nut
		2	2, 3, 6, 7	L	15, 17, 55	EXM	DGZ		Lock Nut
27	05135667AA	1	2, 3, 6, 7	L		EXM	DGZ		SENSOR, Oxygen, Upstream
-28									SENSOR, Temperature
	68012051AA	1	2, 3, 6, 7	L		EXM	DGZ		Diesel Oxidation Catalytic Converter
	68012052AA	1	2, 3, 6, 7	L		EXM	DGZ		Oxygen Sensor Upstream Particulate Filter
29	68012053AA	1	2, 3, 6, 7	L		EXM	DGZ		SENSOR, Pressure
30	68012057AA	1	2, 3, 6, 7	L		EXM	DGZ		BRACKET, Oxygen Sensor To Oil Pan
31	06104681AA	2	2, 3, 6, 7	L		EXM	DGZ		SCREW
32	68012070AA	1	2, 3, 6, 7	L	13, 15, 17, 53, 55	EXM	DGZ		SEAL
33	68012071AA	3	2, 3, 6, 7	L		EXM	DGZ		SCREW, From Turbocharger To Exhaust Muffler
34	68012072AA	1	2, 3, 6, 7	L		EXM	DGZ		BRACKET
35	68012076AA	2	2, 3, 6, 7	L		EG2, EXM	DGZ		BRACKET
36	68012077AA	1	2, 3, 6, 7	L		EG2, EXM	DGZ		BRACKET
37	06104025AA	2	2, 3, 6, 7	L		EXM	DGZ		SCREW, Hex Flange Head, M8X1.25X30.0
38	05159403AA	1	2, 3, 6, 7	L		EG2, EXM	DGZ		BRACKET
39	68013413AA	1	2, 3, 6, 7	L		EG2, EXM	DGZ		CLIP, Retainer
40									CLAMP, Exhaust

SPRINTER (VB)

SERIES	LINE	BODY	ENGINE	TRANSMISSION
L = LOWLINE	3 = HD DODGE 2WD 2 = Med. Duty DODGE 2WD	03 = CAB CHASSIS WHEEL BASE 3 05 = CAB CHASSIS WHEEL BASE 5 13 = 119 WB 53 = 119 WB 15 = VAN WHEEL BASE 5 55 = WAGON WHEEL BASE 5 17 = VAN WHEEL BASE 7	EG2 = 3.5L V6 Gas Engine EXM = 3.0L V6 Turbo Diesel Engine	DGZ = 5-Speed Auto W5A380 Transmission

Exhaust System / Van / Wagon
Figure 11-115

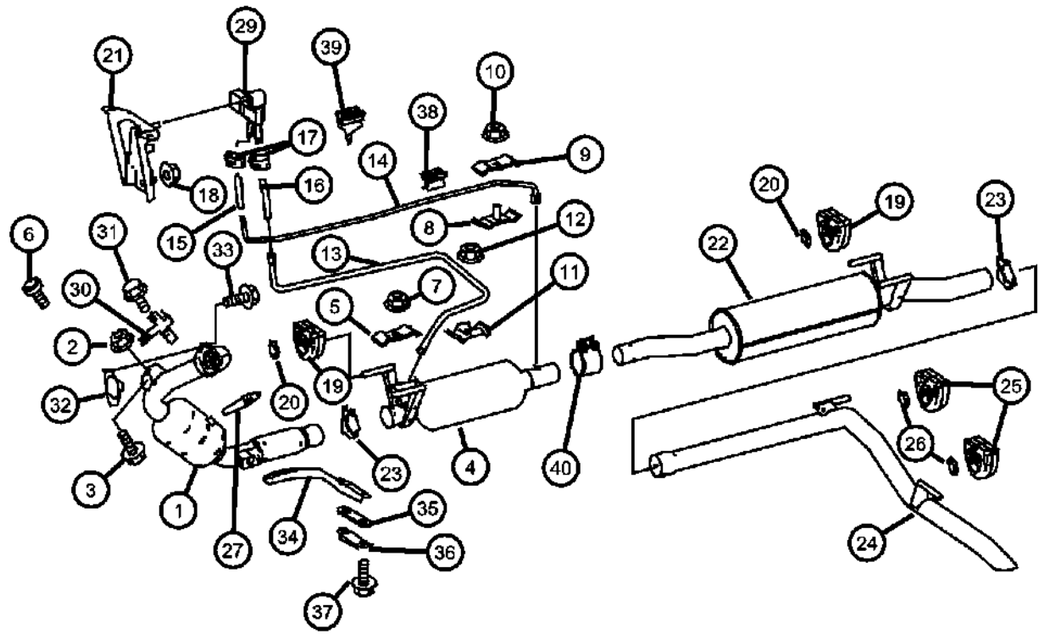

ITEM	PART NUMBER	QTY	LINE	SERIES	BODY	ENGINE	TRANS	TRIM	DESCRIPTION
	68012081AA	1	2, 3, 6, 7	L	13, 15, 17, 53, 55	EXM	DGZ		
	68012084AA	1	2, 3, 6, 7	L		EXM	DGZ		

SPRINTER (VB)

SERIES	LINE	BODY	ENGINE	TRANSMISSION
L = LOWLINE	3 = HD DODGE 2WD 2 = Med. Duty DODGE 2WD	03 = CAB CHASSIS WHEEL BASE 3 05 = CAB CHASSIS WHEEL BASE 5 13 = 119 WB 53 = 119 WB 15 = VAN WHEEL BASE 5 55 = WAGON WHEEL BASE 5 17 = VAN WHEEL BASE 7	EG2 = 3.5L V6 Gas Engine EXM = 3.0L V6 Turbo Diesel Engine	DGZ = 5-Speed Auto W5A380 Transmission

Exhaust System / Cab Chassis
Figure 11-120

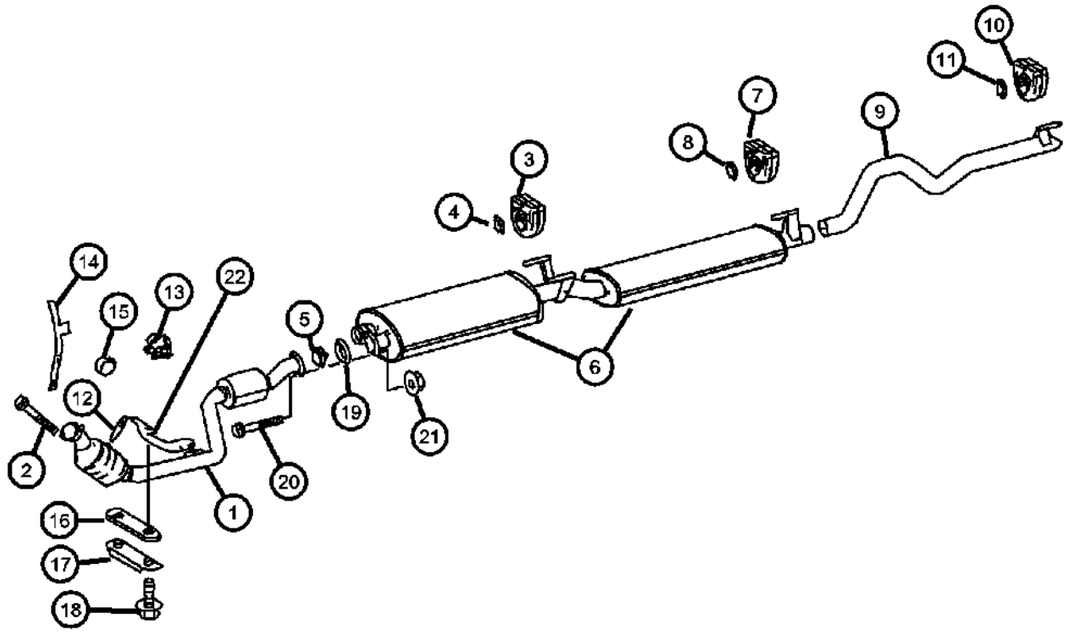

ITEM	PART NUMBER	QTY	LINE	SERIES	BODY	ENGINE	TRANS	TRIM	DESCRIPTION
1									EXHAUST
	68011980AA	1	2, 3, 6, 7	L		EG2	DGZ		Left
	68011987AA	1	2, 3, 6, 7	L		EG2	DGZ		Right
2	05096743AA	2	3, 7	L	03, 05	EG2	DGZ		SCREW, Converter to Manifold, Exhaust To Exhaust Manifold
3	05104109AA	4	3, 7	L	03, 05	EG2	DGZ		INSULATOR, Exhaust
4	05134656AA	2	3, 7	L	03, 05	EG2	DGZ		BOLT, M8, Lock Nut
5									SEAL, Exhaust
	68012078AA	1	2, 3	L		EG2	DGZ		Muffler Intake, Left
	68028791AA	1	2, 3, 6, 7	L		EG2	DGZ		Muffler Intake, Right
6	68012005AA	1	3, 7	L	03, 05	EG2	DGZ		MUFFLER, Exhaust
7	05104109AA	1	3, 7	L	03, 05	EG2	DGZ		INSULATOR, Exhaust
8	05134656AA	2	3, 7	L	03, 05	EG2	DGZ		BOLT, M8, Lock Nut
9	68029190AA	1	3	L	05	EG2	DGZ		TAILPIPE, Exhaust
10	05104109AA	1	3, 7	L	03, 05	EG2	DGZ		INSULATOR, Exhaust
11	05134656AA	2	3, 7	L	03, 05	EG2	DGZ		BOLT, M8
12									SENSOR, Oxygen
	68012050AA	1	2, 3, 6, 7	L		EG2	DGZ		Up Stream, Right
	68012058AA	2	2, 3, 6, 7	L		EG2	DGZ		Downstream,
13	68012056AA	4	2, 3, 6, 7	L		EG2	DGZ		CLAMP, Oxygen Sensor Clip
14									BRACKET
	68012059AA	1	2, 3, 6, 7	L		EG2	DGZ		Oxygen Sensor Bracket At Transmission, Left
	68012060AA	1	2, 3, 6, 7	L		EG2	DGZ		Oxygen Sensor Bracket At Transmission, Right
15	68011872AA	3	2, 3, 6, 7	L		EG2	DGZ		CLIP, Oxygen Sensor Clip
16	68012076AA	2	2, 3, 6, 7	L		EG2, EXM	DGZ		BRACKET, Base To Transmission
17	68012077AA	1	2, 3, 6, 7	L		EG2, EXM	DGZ		BRACKET
18	06104025AA	2	3, 7	L	03, 05	EG2, EXM	DGZ		SCREW, Hex Flange Head, M8X1.25X30.0
19	68012079AA	1	2, 3, 6, 7	L		EG2	DGZ		FLANGE, Exhaust Pipe
20	05125722AA	3	2, 3, 6, 7	L		EG2	DGZ		SCREW, SCREW, Flange To Exhaust Muffler
21	05126237AA	3	2, 3, 6, 7	L	03, 05, 13, 15, 17	EG2, EXM	DGZ		NUT, Hex, Flange To Exhaust Muffler
22									BRACKET

SPRINTER (VB)

SERIES	LINE	BODY	ENGINE	TRANSMISSION
L = LOWLINE	3 = HD DODGE 2WD 2 = Med. Duty DODGE 2WD	03 = CAB CHASSIS WHEEL BASE 3 05 = CAB CHASSIS WHEEL BASE 5 13 = 119 WB 53 = 119 WB 15 = VAN WHEEL BASE 5 55 = WAGON WHEEL BASE 5 17 = VAN WHEEL BASE 7	EG2 = 3.5L V6 Gas Engine EXM = 3.0L V6 Turbo Diesel Engine	DGZ = 5-Speed Auto W5A380 Transmission

Exhaust System / Cab Chassis
Figure 11-120

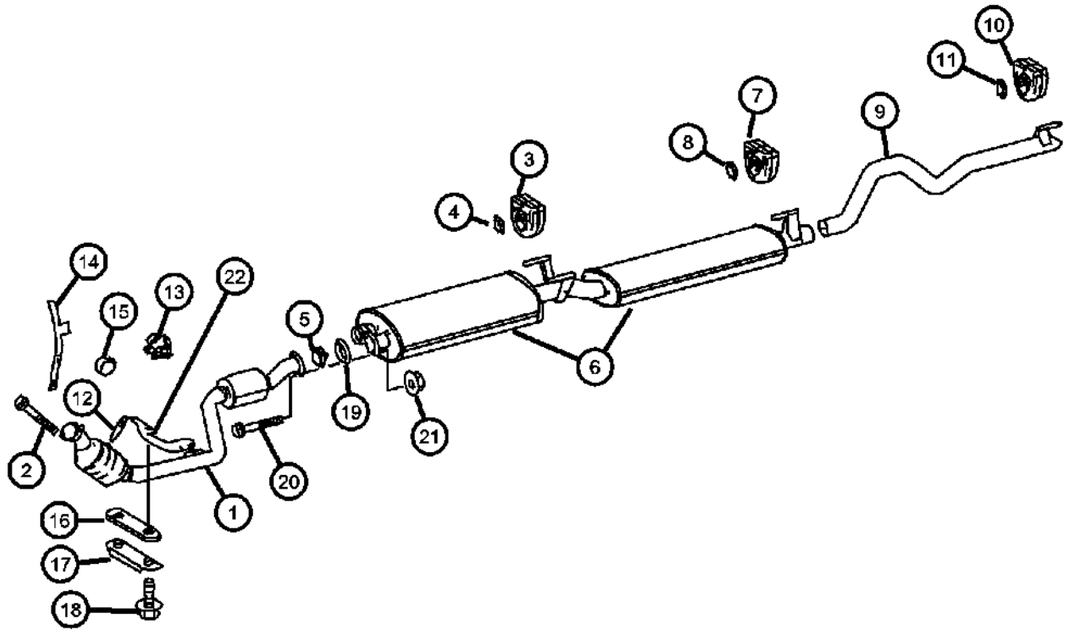

ITEM	PART NUMBER	QTY	LINE	SERIES	BODY	ENGINE	TRANS	TRIM	DESCRIPTION
	68012082AA	1	2, 3, 6, 7	L		EG2	DGZ		Exhaust Pipe To Transmission, Left
	68012083AA	1	2, 3, 6, 7	L		EG2	DGZ		Exhaust Pipe To Transmission, Right

SPRINTER (VB)

SERIES	LINE	BODY	ENGINE	TRANSMISSION
L = LOWLINE	3 = HD DODGE 2WD 2 = Med. Duty DODGE 2WD	03 = CAB CHASSIS WHEEL BASE 3 05 = CAB CHASSIS WHEEL BASE 5 13 = 119 WB 53 = 119 WB 15 = VAN WHEEL BASE 5 55 = WAGON WHEEL BASE 5 17 = VAN WHEEL BASE 7	EG2 = 3.5L V6 Gas Engine EXM = 3.0L V6 Turbo Diesel Engine	DGZ = 5-Speed Auto W5A380 Transmission

Exhaust System / Cab Chassis
Figure 11-125

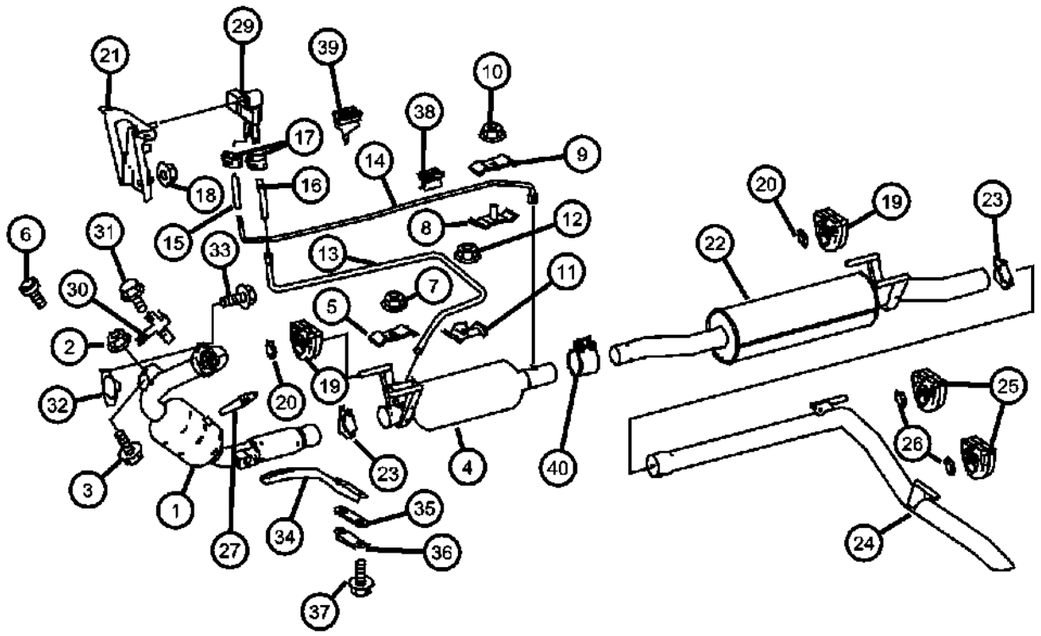

ITEM	PART NUMBER	QTY	LINE	SERIES	BODY	ENGINE	TRANS	TRIM	DESCRIPTION
1	68011935AA	1	3, 7	L	03, 05	EXM	DGZ		EXHAUST
2	06104709AA	1	3, 7	L	03, 05	EXM	DGZ		NUT, Hex Flange, M8x1.25, Exhaust To Cylinder Head
3	05073723AB	1	3, 7	L	03, 05	EXM	DGZ		SCREW, Exhaust To Cylinder Head
4	68011959AA	1	2, 3, 6, 7	L		EXM	DGZ		FILTER ASSY, DIESEL PARTICULATE
5	68011970AA	2	3, 7	L	03, 05	EXM	DGZ		BRACKET, Exhaust
6	06104005AA	1	3, 7	L	03, 05	EXM	DGZ		BOLT, 6 Lobe External Head, M6X1.00X16.00, Bracket To Cylinder Head
7	68004878AA	2	3, 7	L	03, 05	EG2, EXM	DGZ		NUT
8	68011971AA	1	2, 3, 6, 7	L		EXM	DGZ		BRACKET, Hose
9	68011970AA	2	3, 7	L	03, 05	EXM	DGZ		BRACKET, Exhaust
10	68004878AA	2	3, 7	L	03, 05	EG2, EXM	DGZ		NUT
11	68011972AA	1	2, 3, 6, 7	L		EXM	DGZ		BRACKET, Hose
12	68004878AA	2	3, 7	L	03, 05	EG2, EXM	DGZ		NUT
13	68011973AA	1	2, 3, 6, 7	L		EXM	DGZ		HOSE, Delivery Line To Particulate Filter
14	68005200AA	1	2, 3, 6, 7	L		EXM	DGZ		HOSE, Delivery Line To Particulate Filter
15	68011975AA	1	2, 3, 6, 7	L		EXM	DGZ		HOSE
16	68011976AA	1	2, 3, 6, 7	L		EXM	DGZ		HOSE
17	05080439AB	2	2, 3, 6, 7	L		EXM	DGZ		CLAMP
18	68004878AA	2	3, 7	L	03, 05	EG2, EXM	DGZ		NUT
19	05104109AA	4	3, 7	L	03, 05	EXM	DGZ		INSULATOR, Exhaust
20	05134656AA	4	3, 7	L	03, 05	EXM	DGZ		BOLT, M8
21	68011977AA	1	7, 3	L	03, 05	EXM	DGZ		BRACKET, Exhaust
22									MUFFLER, Exhaust
	68011992AA	1	2, 3, 6, 7	L		EXM	DGZ		With [NEP]
	68011993AA	1	3, 7	L	03, 05	EXM	DGZ		
23	68012004AA	1	2, 3, 6, 7	L		EXM	DGZ		CLAMP
24									TAILPIPE, Exhaust
	68029189AA	1	3, 7	L	05	EXM	DGZ		
	68012102AA	1	3, 7	L	03	EXM	DGZ		
25	05104109AA	4	3, 7	L	03, 05	EXM	DGZ		INSULATOR, Exhaust

SPRINTER (VB)

SERIES	LINE	BODY	ENGINE	TRANSMISSION
L = LOWLINE	3 = HD DODGE 2WD 2 = Med. Duty DODGE 2WD	03 = CAB CHASSIS WHEEL BASE 3 05 = CAB CHASSIS WHEEL BASE 5 13 = 119 WB 53 = 119 WB 15 = VAN WHEEL BASE 5 55 = WAGON WHEEL BASE 5 17 = VAN WHEEL BASE 7	EG2 = 3.5L V6 Gas Engine EXM = 3.0L V6 Turbo Diesel Engine	DGZ = 5-Speed Auto W5A380 Transmission

Exhaust System / Cab Chassis
Figure 11-125

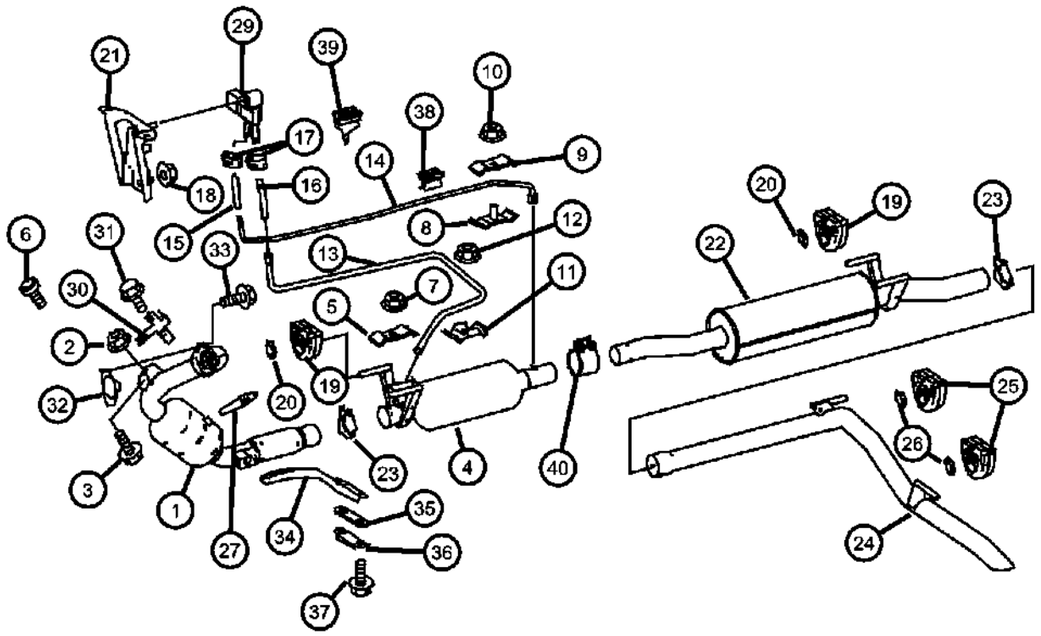

ITEM	PART NUMBER	QTY	LINE	SERIES	BODY	ENGINE	TRANS	TRIM	DESCRIPTION
26	05134656AA	4	3, 7	L	03, 05	EXM	DGZ		BOLT, M8
27	05135667AA	1	2, 3, 6, 7	L		EXM	DGZ		SENSOR, Oxygen, Upstream
-28									SENSOR, Temperature
	68012051AA	1	2, 3, 6, 7	L		EXM	DGZ		Diesel Oxidation Catalytic Converter
	68012052AA	1	2, 3, 6, 7	L		EXM	DGZ		
29	68012053AA	1	2, 3, 6, 7	L		EXM	DGZ		SENSOR, Pressure
30	68012057AA	1	2, 3, 6, 7	L		EXM	DGZ		BRACKET, Oxygen Sensor To Oil Pan
31	06104681AA	2	2, 3, 6, 7	L		EXM	DGZ		SCREW
32	68012070AA	1	3, 7	L	03, 05	EXM	DGZ		SEAL
33	68012071AA	3	2, 3, 6, 7	L		EXM	DGZ		SCREW, From Turbocharger To Exhaust Muffler
34	68012072AA	1	2, 3, 6, 7	L		EXM	DGZ		BRACKET
35	68012076AA	2	2, 3, 6, 7	L		EG2, EXM	DGZ		BRACKET
36	68012077AA	1	2, 3, 6, 7	L		EG2, EXM	DGZ		BRACKET
37	06104025AA	2	2, 3, 6, 7	L		EXM	DGZ		SCREW, Hex Flange Head, M8X1.25X30.0
38	05159403AA	1	2, 3, 6, 7	L		EG2, EXM	DGZ		BRACKET
39	68013413AA	1	2, 3, 6, 7	L		EG2, EXM	DGZ		CLIP, Retainer
40									CLAMP, Exhaust
	68012081AA	1	3, 7	L	03, 05	EXM	DGZ		
	68012084AA	1	2, 3, 6, 7	L		EXM	DGZ		

SPRINTER (VB)

SERIES	LINE	BODY	ENGINE	TRANSMISSION
L = LOWLINE	3 = HD DODGE 2WD 2 = Med. Duty DODGE 2WD	03 = CAB CHASSIS WHEEL BASE 3 05 = CAB CHASSIS WHEEL BASE 5 13 = 119 WB 53 = 119 WB 15 = VAN WHEEL BASE 5 55 = WAGON WHEEL BASE 5 17 = VAN WHEEL BASE 7	EG2 = 3.5L V6 Gas Engine EXM = 3.0L V6 Turbo Diesel Engine	DGZ = 5-Speed Auto W5A380 Transmission

Heat Shields
Figure 11-210

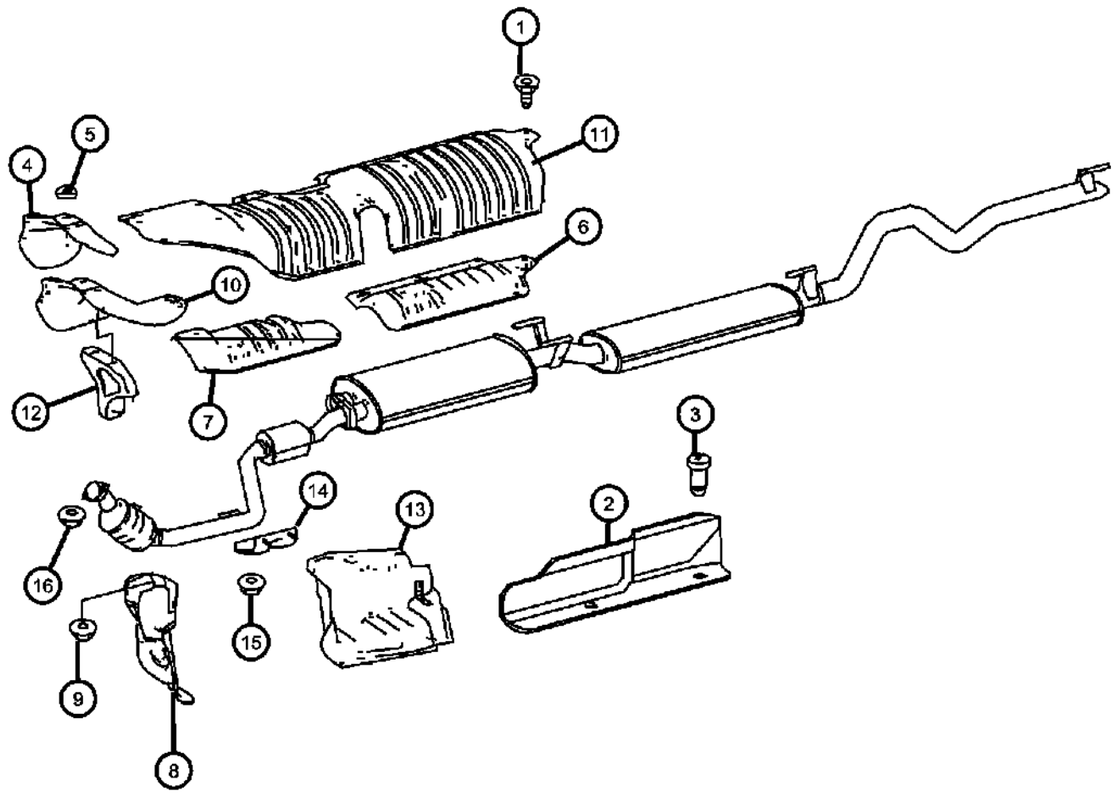

ITEM	PART NUMBER	QTY	LINE	SERIES	BODY	ENGINE	TRANS	TRIM	DESCRIPTION
1									SCREW
	06104681AA	1	2, 3, 6, 7	L		EG2	DGZ		
		1	2, 3, 6, 7	L		EXM	DGZ		
2	68004815AA	1	2, 3, 6, 7	L		EG2	DGZ		SHIELD, Heat
3	06104675AA	5	2, 3, 6, 7	L		EG2	DGZ		SCREW
4	68012061AA	1	2, 3, 6, 7	L		EXM	DGZ		SHIELD, Heat
5	68004747AA	2	2, 3, 6, 7	L		EG2, EXM	DGZ		WASHER, Spring
6	68012062AA	1	2, 3, 6, 7	L		EXM	DGZ		SHIELD, Heat, Protective Plate Main Muffler
7	68005202AA	1	2, 3, 6, 7	L		EXM	DGZ		SHIELD, Heat, Protective Plate Particulate Filter
8	68004744AA	1	2, 3, 6, 7	L		EXM	DGZ		PLATE, Protective Plate Fuel Tank
9									NUT
	68004878AA	2	3, 7	L	03, 05	EG2, EXM	DGZ		
		2	2, 3, 6, 7	L	13, 15, 17, 53, 55	EG2, EXM	DGZ		
10									SHIELD, Heat
	68012064AA	1	2, 3, 6, 7	L		EG2	DGZ		Right
	68012065AA	1	2, 3, 6, 7	L		EG2	DGZ		Left
11	68005203AA	1	2, 3, 6, 7	L		EG2	DGZ		SHIELD, Heat, Protective Plate Main Muffler
12	68012066AA	1	2, 3, 6, 7	L		EG2	DGZ		BRACKET, Heat Shield
13	68005204AA	1	2, 3, 6, 7	L		EG2	DGZ		SHIELD, Heat, Battery Protective Plate
14	68012067AA	1	2, 3, 6, 7	L		EG2	DGZ		BRACKET, Battery
15									NUT
	68004878AA	2	3, 7	L	03, 05	EG2, EXM	DGZ		
		2	2, 3, 6, 7	L	13, 15, 17, 53, 55	EG2, EXM	DGZ		
16	68012080AA	1	2, 3, 6, 7	L		EG2	DGZ		NUT

SPRINTER (VB)

SERIES	LINE	BODY	ENGINE	TRANSMISSION
L = LOWLINE	3 = HD DODGE 2WD 2 = Med. Duty DODGE 2WD	03 = CAB CHASSIS WHEEL BASE 3 05 = CAB CHASSIS WHEEL BASE 5 13 = 119 WB 53 = 119 WB 15 = VAN WHEEL BASE 5 55 = WAGON WHEEL BASE 5 17 = VAN WHEEL BASE 7	EG2 = 3.5L V6 Gas Engine EXM = 3.0L V6 Turbo Diesel Engine	DGZ = 5-Speed Auto W5A380 Transmission

Group - 13

Frames and Bumpers

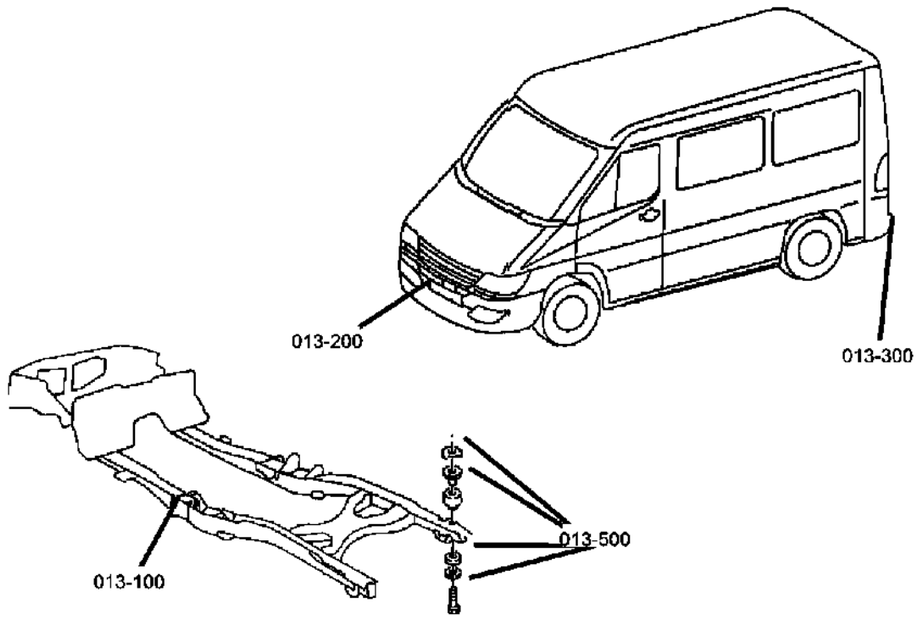

013-100
Frames



013-200
Front Bumper and Fascia

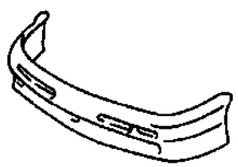

013-300
Rear Bumper and Fascia



013-600
Trailer Tow

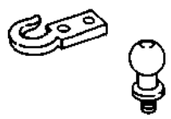

Group - 13 Frames and Bumpers

Illustration Title — Group-Fig. No.

Frames
Attaching Parts, Frame ..... Fig. 13 - 150

Front Bumper and Fascia
Front Fascia ..... Fig. 13 - 205

Rear Bumper and Fascia
Rear Bumper & Rear Back Up Sensors ..... Fig. 13 - 305

Trailer Tow
Rear Cross Member and Tow Hook ..... Fig. 13 - 605
Rear Trailer Hitch ..... Fig. 13 - 610

Attaching Parts, Frame
Figure 13-150

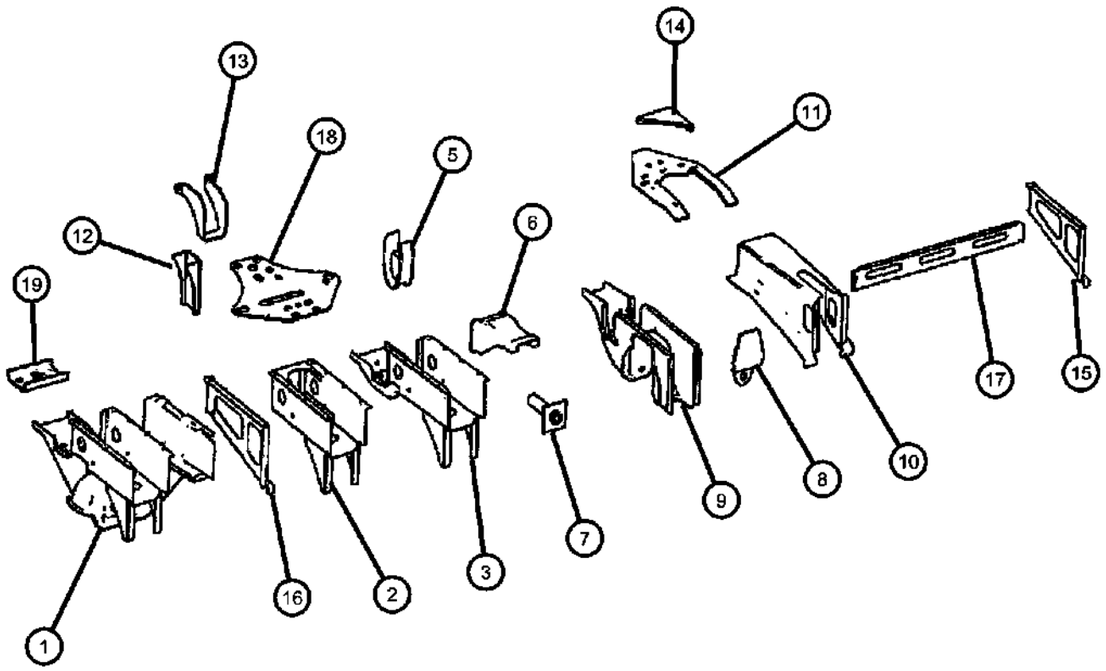

ITEM	PART NUMBER	QTY	LINE	SERIES	BODY	ENGINE	TRANS	TRIM	DESCRIPTION
1									BRACKET, Crossmember
	68007839AA	1	2, 6	L	15, 17, 55				Left
	68007843AA	1	2, 6	L	13, 53				Left
	68007868AA	1	2, 6	L	15, 17, 55				Right
	68007871AA	1	2, 6	L	13, 53				Right
2									BRACKET, Crossmember
	68007840AA	2	3, 7	L	15, 17				
	68007844AA	2	3, 7	L	13				
3									BRACKET, Crossmember
	68007879AA	1	2, 3, 6, 7	L	15, 17, 55				Left
	68007882AA	1	2, 3, 6, 7	L	15, 17, 55				Right
-4									BRACKET, Hose
	68007392AA	2	2, 3, 6, 7	L	13, 15, 17, 53, 55				
		1	3, 7	L	03, 05				
5	68007885AA	2	2, 6	L	13, 15, 17, 53, 55				BRACKET, Jack
6	68009792AA	2	2, 3, 6, 7	L	53, 55				SUPPORT
7	68007402AA	2	2, 6	L	13, 15, 17, 53, 55				REINFORCEMENT
8	68007894AA	4	3, 7	L	13, 15, 17				BRACKET
9	68007813AA	2	2, 6	L	13, 15, 17, 53, 55				SUPPORT, Rear Spring
10	68007902AA	2	3, 7	L	13, 15, 17				SUPPORT, Rear Spring
11	68007904AA	2	3, 7	L	13, 15, 17				PLATE
12	68007599AA	1	3, 7	L	03, 05, 13, 15, 17				BRACKET, Spring
13	68007602AA	1	3, 7	L	03, 05, 13, 15, 17				SUPPORT
14	68007905AA	2	3, 7	L	17, 13, 15				REINFORCEMENT
15	68007909AA	2	2, 3, 6, 7	L	15, 17, 55				BRACE
16	68007911AA	2	2, 3, 6, 7	L	15, 17, 55				BRACE
17	68007912AA	2	3, 7	L	17				REINFORCEMENT
18									REINFORCEMENT
	68007913AA	1	3, 7	L	13, 15, 17				Left
	68007914AA	1	3, 7	L	13, 15, 17				Right

SPRINTER (VB)

SERIES	LINE	BODY	ENGINE	TRANSMISSION
L = LOWLINE	3 = HD DODGE 2WD 2 = Med. Duty DODGE 2WD	03 = CAB CHASSIS WHEEL BASE 3 05 = CAB CHASSIS WHEEL BASE 5 13 = 119 WB 53 = 119 WB 15 = VAN WHEEL BASE 5 55 = WAGON WHEEL BASE 5 17 = VAN WHEEL BASE 7	EG2 = 3.5L V6 Gas Engine EXM = 3.0L V6 Turbo Diesel Engine	DGZ = 5-Speed Auto W5A380 Transmission

AR = use ase required - = Non illustrrated part

<< RETURN TO GROUP INDEX

Attaching Parts, Frame
Figure 13-150

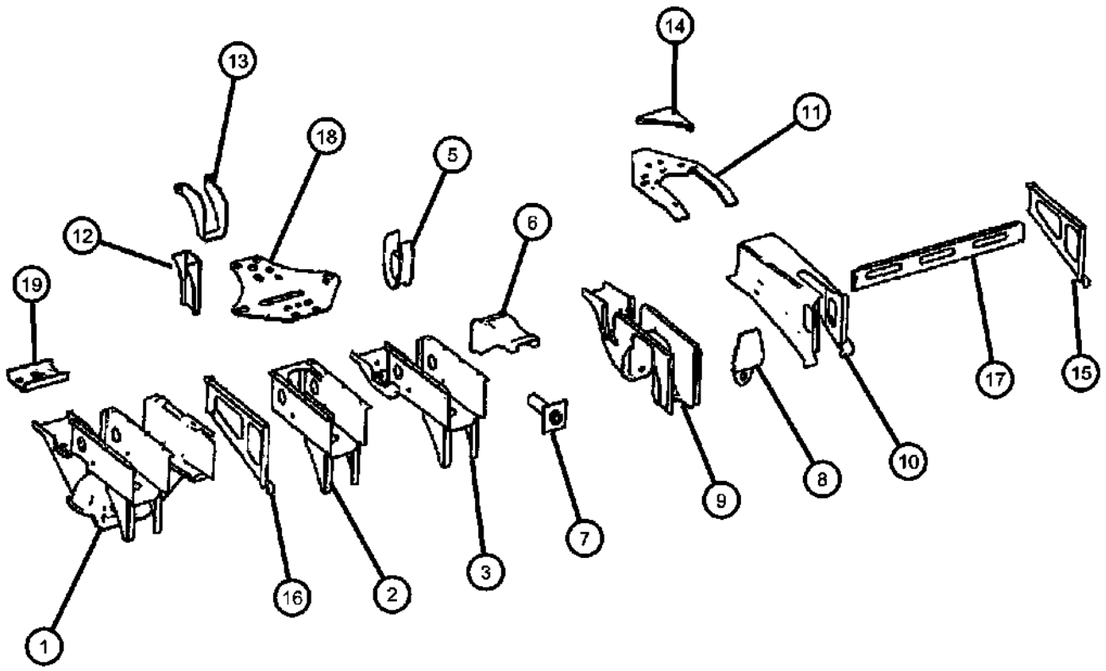

ITEM	PART NUMBER	QTY	LINE	SERIES	BODY	ENGINE	TRANS	TRIM	DESCRIPTION
19									BRACKET
	68007609AA	1	3, 7	L	03, 05				
		1	3, 7	L	13, 53				

SPRINTER (VB)

SERIES	LINE	BODY	ENGINE	TRANSMISSION
L = LOWLINE	3 = HD DODGE 2WD 2 = Med. Duty DODGE 2WD	03 = CAB CHASSIS WHEEL BASE 3 05 = CAB CHASSIS WHEEL BASE 5 13 = 119 WB 53 = 119 WB 15 = VAN WHEEL BASE 5 55 = WAGON WHEEL BASE 5 17 = VAN WHEEL BASE 7	EG2 = 3.5L V6 Gas Engine EXM = 3.0L V6 Turbo Diesel Engine	DGZ = 5-Speed Auto W5A380 Transmission

Front Fascia
Figure 13-205

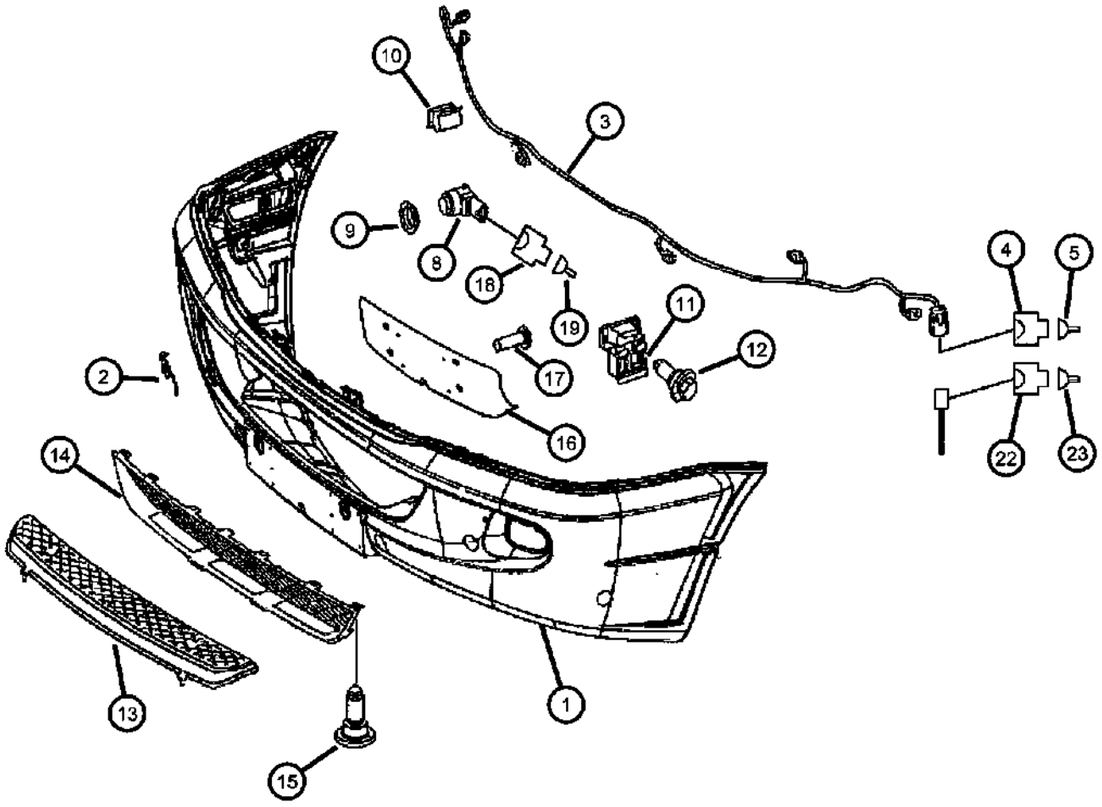

ITEM	PART NUMBER	QTY	LINE	SERIES	BODY	ENGINE	TRANS	TRIM	DESCRIPTION
1									FASCIA, Front
	1GY39XDVAA	1	2, 3, 6, 7	L	13, 15, 17, 53, 55				Gray, With Parksense [XAG] and Fog Lamps [LNJ]
	1GY39P01AA	1	2, 3, 6, 7	L	13, 15, 17, 53, 55				White, With Parksense [XAG] and Fog Lamps [LNJ]
	1GY40XDVAA	1	2, 3, 6, 7	L					Gray, With Fog Lamps [LNJ] Without Parksense [XAG]
	1GY40P01AA	1	2, 3, 6, 7	L					White, With Fog Lamps [LNJ] Without Parksense [XAG]
	1GY41XDVAA	1	2, 3, 6, 7	L	13, 15, 17, 53, 55				Gray, With Parksense [XAG] Without Fog Lamps [LNJ]
	1GY41P01AA	1	2, 3, 6, 7	L	13, 15, 17, 53, 55				White, With Parksense [XAG] Without Fog Lamps [LNJ]
	1VB09P01AA	1	2, 3, 6, 7	L					White, Without Parksense [XAG] Without Fog Lamps [LNJ]
	1VB09XDVAA	1	2, 3, 6, 7	L					Gray, Without Parksense [XAG] Without Fog Lamps [LNJ]
2									COVER, Tow Eye
	1HQ50P01AA	1	2, 3, 6, 7	L					White
	1HQ50XD-VAA	1	2, 3, 6, 7	L					Gray
3	68010558AA	1	2, 3, 6, 7	L	13, 15, 17, 53, 55				WIRING, Parksense
4	68011283AA	1	2, 3, 6, 7	L					CONNECTOR
5	05133353AA	AR	2, 3, 6, 7	L					TERMINAL
-6	05103663AA	AR	2, 3, 6, 7	L					GROMMET
-7									PLUG
	05138038AA	1	2, 3, 6, 7	L	03, 05, 13, 15, 17				
		1	2, 3, 6, 7	L	53, 55, 57				
8	68010557AA	6	2, 3, 6, 7	L	13, 15, 17, 53, 55				SENSOR, Park Assist
9	05120375AA	6	2, 3, 6, 7	L	13, 15, 17, 53, 55				SPACER, Sensor
10	68010560AA	6	2, 3, 6, 7	L	13, 15, 17, 53, 55				CLIP
11									BRACKET, Front Bumper
	68010550AA	1	3, 7	L	03, 05				Right
		1	2, 3, 6, 7	L	13, 15, 17, 53, 55				Right
	68010551AA	1	3, 7	L	03, 05				Left

SPRINTER (VB)

SERIES	LINE	BODY	ENGINE	TRANSMISSION
L = LOWLINE	3 = HD DODGE 2WD 2 = Med. Duty DODGE 2WD	03 = CAB CHASSIS WHEEL BASE 3 05 = CAB CHASSIS WHEEL BASE 5 13 = 119 WB 53 = 119 WB 15 = VAN WHEEL BASE 5 55 = WAGON WHEEL BASE 5 17 = VAN WHEEL BASE 7	EG2 = 3.5L V6 Gas Engine EXM = 3.0L V6 Turbo Diesel Engine	DGZ = 5-Speed Auto W5A380 Transmission

AR = use ase required - = Non illustrrated part

<< RETURN TO GROUP INDEX

Front Fascia
Figure 13-205

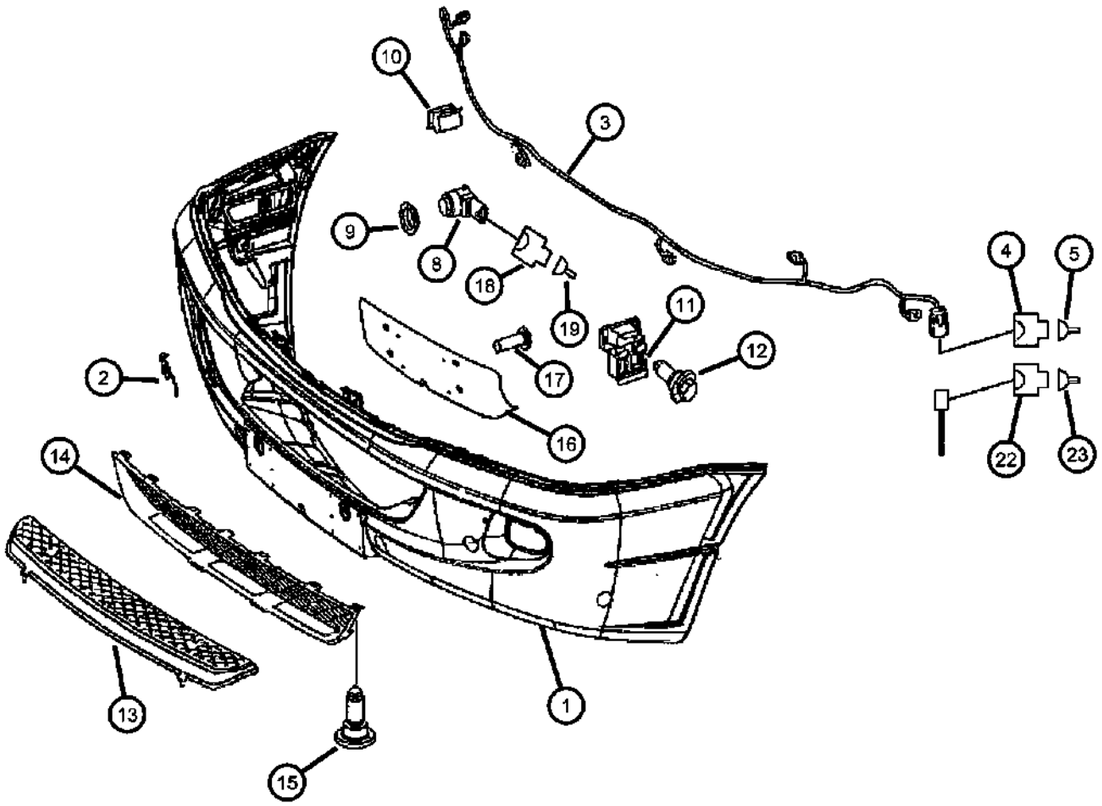

ITEM	PART NUMBER	QTY	LINE	SERIES	BODY	ENGINE	TRANS	TRIM	DESCRIPTION
		1	2, 3, 6, 7	L	13, 15, 17, 53, 55				Left
12									SCREW
	05103728AA	2	3, 7	L	03, 05				
		2	2, 3, 6, 7	L	13, 15, 17, 53, 55				
13	1HA76XDVAA	1	2, 3, 6, 7	L					PLATE
14	1HA77DX9AA	1	2, 3, 6, 7	L					GRILLE, Fascia
15									BOLT, Hex Head
	68010553AA	4	3, 7	L	03, 05				Side Guide At Front Module
		2	2, 3, 6, 7	L	13, 15, 17, 53, 55				Step Plate at Support
		4	2, 3, 6, 7	L	13, 15, 17, 53, 55				Side Guide At Front Module
		2	3, 7	L	03, 05				Step Plate at Support
16									BRACKET, License Plate
	68010554AA	1	3, 7	L	03, 05				
		1	2, 3, 6, 7	L	13, 15, 17, 53, 55				
17	68010555AA	4	2, 3, 6, 7	L					SCREW, License Plate Molding to Bumper
18	68011244AA	1	2, 3, 6, 7	L					CONNECTOR, Parksense Sensor
19	68011878AA	AR	2, 3, 6, 7	L					TERMINAL
-20	68011050AA	AR	2, 3, 6, 7	L					GASKET
-21	68011051AA	AR	2, 3, 6, 7	L					GASKET
22	68011377AA	1	2, 3, 6, 7	L					CONNECTOR
23	68011882AA	AR	2, 3, 6, 7	L					CONNECTOR

SPRINTER (VB)

SERIES	LINE	BODY	ENGINE	TRANSMISSION
L = LOWLINE	3 = HD DODGE 2WD 2 = Med. Duty DODGE 2WD	03 = CAB CHASSIS WHEEL BASE 3 05 = CAB CHASSIS WHEEL BASE 5 13 = 119 WB 53 = 119 WB 15 = VAN WHEEL BASE 5 55 = WAGON WHEEL BASE 5 17 = VAN WHEEL BASE 7	EG2 = 3.5L V6 Gas Engine EXM = 3.0L V6 Turbo Diesel Engine	DGZ = 5-Speed Auto W5A380 Transmission

Rear Bumper & Rear Back Up Sensors
Figure 13-305

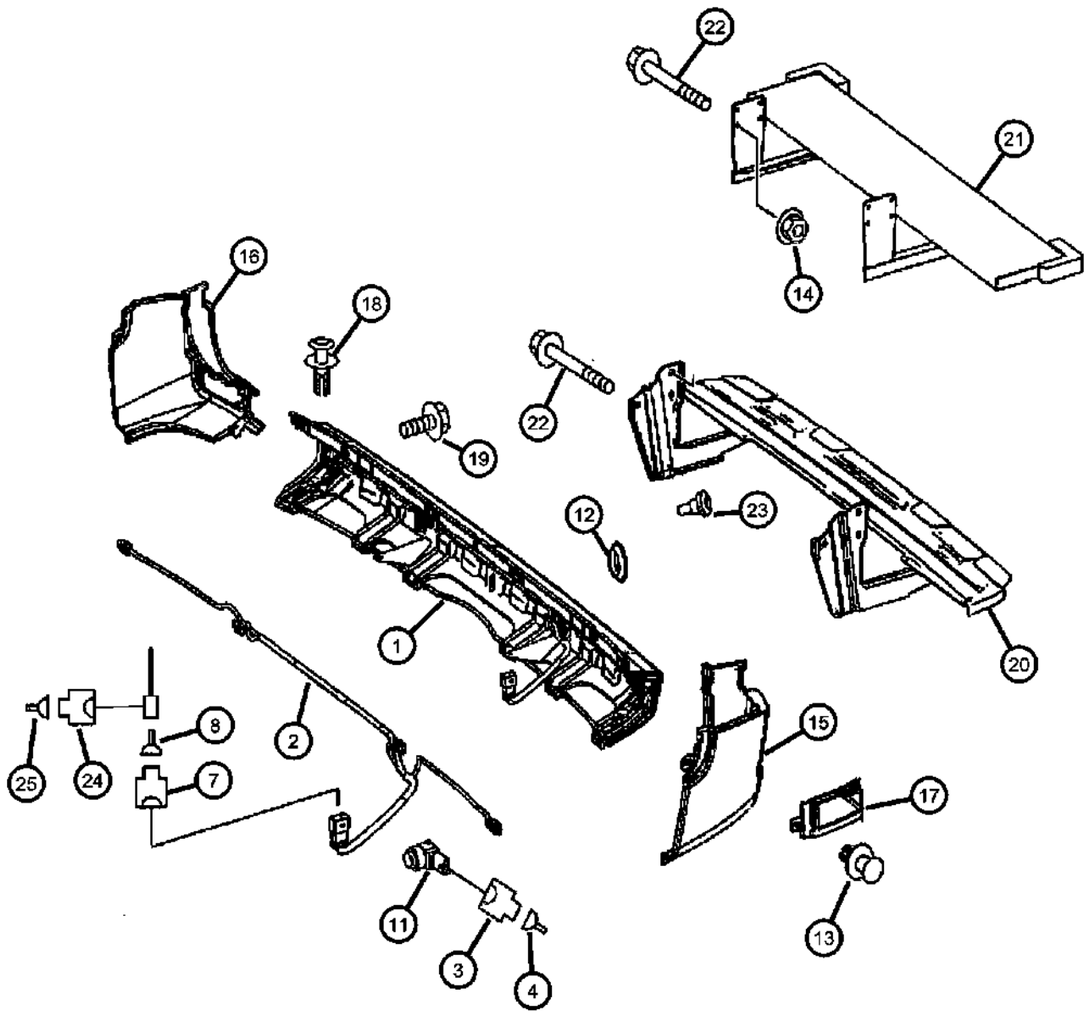

ITEM	PART NUMBER	QTY	LINE	SERIES	BODY	ENGINE	TRANS	TRIM	DESCRIPTION
1									FASCIA, Rear
	1HA78P01AA	1	2, 3, 6, 7	L	13, 15, 17, 53, 55				White, Without Parksense [XAG] or Step Pad [MBZ]
	1HA78XDVAA	1	2, 3, 6, 7	L	13, 15, 17, 53, 55				Gray, Without Parksense [XAG] or Step Pad [MBZ]
	1HA79XDVAA	1	2, 3, 6, 7	L	13, 15, 17, 53, 55				Gray, With Parksense [XAG] and Step Pad [MBZ]
	1HA80XDVAA	1	2, 3, 6, 7	L	13, 15, 17, 53, 55				Gray, With Parksense [XAG] Without Step Pad [MBZ]
	1HA81XDVAA	1	2, 3, 6, 7	L	13, 15, 17, 53, 55				Gray, With Step Pad [MBZ], Without Parksense [XAG]
	1HA80P01AA	1	2, 3, 6, 7	L	13, 15, 17, 53, 55				White, With Parksense [XAG] Without Step Pad [MBZ]
2									WIRING
	68010567AA	1	2, 3, 6, 7	L	13, 15, 17, 53, 55				With Parksense [XAG] Without Step Pad [MBZ]
	68010568AA	1	2, 3, 6, 7	L	13, 15, 17, 53, 55				With Parksense [XAG] and Step Pad [MBZ]
3	68011244AA	2	2, 3, 6, 7	L					CONNECTOR, Parksense
4	68013248AA	AR	2, 3, 6, 7	L					TERMINAL
-5	05161599AA	AR	2, 3, 6, 7	L					SEAL, Wiring
-6	05138031AA	1	2, 3, 6, 7	L					GASKET
7	68011283AA	1	2, 3, 6, 7	L					CONNECTOR
8	05133353AA	AR	2, 3, 6, 7	L					TERMINAL
-9	05103663AA	AR	2, 3, 6, 7	L					GROMMET
-10	05120865AA	1	2, 3, 6, 7	L					SEAL, Wiring
11	68010557AA	4	2, 3, 6, 7	L	13, 15, 17, 53, 55				SENSOR, Park Assist
12	05120375AA	4	2, 3, 6, 7	L	13, 15, 17, 53, 55				SPACER, Sensor
13	1AR96DX9AA	3	2, 3, 6, 7	L	13, 15, 17, 53, 55				RIVET, Plastic
14	06105171AA	8	2, 3, 6, 7	L	13, 15, 17, 53, 55				NUT
15									COVER, Fascia, Left
	1VB08P01AA	1	2, 3, 6, 7	L					White
	1VB08XDVAA	1	2, 3, 6, 7	L					Gray
16									COVER, Fascia
	1HA83P01AA	1	2, 3, 6, 7	L	13, 15, 17, 53, 55				White

SPRINTER (VB)

SERIES	LINE	BODY	ENGINE	TRANSMISSION
L = LOWLINE	3 = HD DODGE 2WD 2 = Med. Duty DODGE 2WD	03 = CAB CHASSIS WHEEL BASE 3 05 = CAB CHASSIS WHEEL BASE 5 13 = 119 WB 53 = 119 WB 15 = VAN WHEEL BASE 5 55 = WAGON WHEEL BASE 5 17 = VAN WHEEL BASE 7	EG2 = 3.5L V6 Gas Engine EXM = 3.0L V6 Turbo Diesel Engine	DGZ = 5-Speed Auto W5A380 Transmission

AR = use ase required - = Non illustrrated part

Rear Bumper & Rear Back Up Sensors
Figure 13-305

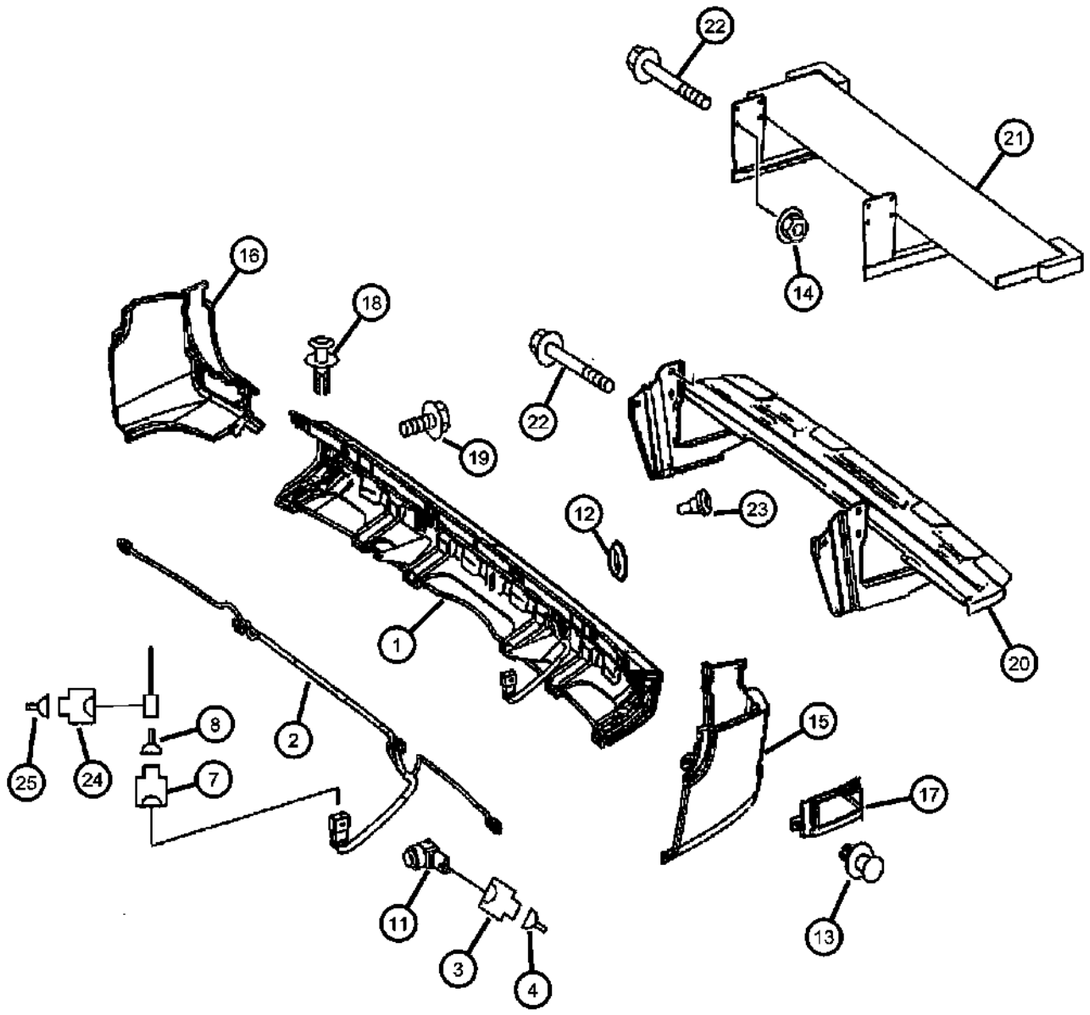

ITEM	PART NUMBER	QTY	LINE	SERIES	BODY	ENGINE	TRANS	TRIM	DESCRIPTION
	1HA83XDVAA	1	2, 3, 6, 7	L	13, 15, 17, 53, 55				Gray
17									COVER, Fascia
	1HA82P01AA	1	2, 3, 6, 7	L	13, 15, 17, 53, 55				White, Left
	1HA84P01AA	1	2, 3, 6, 7	L	13, 15, 17, 53, 55				White, Right
	1HA84XDVAA	1	2, 3, 6, 7	L	13, 15, 17, 53, 55				Gray, Right
	1HA82XDVAA	1	2, 3, 6, 7	L	13, 15, 17, 53, 55				Gray, Left
18	1AR96DX9AA	1	2, 3, 6, 7	L	13, 15, 17, 53, 55				RIVET, Plastic, Cover to Body
19	1AR96DX9AA	1							SCREW, (NOT SERVICED)
20	68012541AA	1	2, 3, 6, 7	L	13, 15, 17, 53, 55				RUNNING BOARD, NONE, SPRINTER
21									RUNNING BOARD, NONE, SPRINTER
	68012557AA	1	2, 3, 6, 7	L	13, 15, 17, 53, 55				Wide Metal Rear Step [MKB
	68012558AA	1	2, 3, 6, 7	L	13, 15, 17, 53, 55				Higher Wide Metal Rear Step [MKK]
22	06104245AA	6	2, 3, 6, 7	L	13, 15, 17, 53, 55				SCREW, Step to Side Member
23	68010571AA	7	2, 3, 6, 7	L					SCREW
24	68011377AA	1	2, 3, 6, 7	L					CONNECTOR, Parksense
25	68011882AA	AR	2, 3, 6, 7	L					TERMINAL
-26	05103663AA	AR	2, 3, 6, 7	L					GROMMET
-27	05120865AA	1	2, 3, 6, 7	L					SEAL, Wiring

SPRINTER (VB)

SERIES	LINE	BODY	ENGINE	TRANSMISSION
L = LOWLINE	3 = HD DODGE 2WD 2 = Med. Duty DODGE 2WD	03 = CAB CHASSIS WHEEL BASE 3 05 = CAB CHASSIS WHEEL BASE 5 13 = 119 WB 53 = 119 WB 15 = VAN WHEEL BASE 5 55 = WAGON WHEEL BASE 5 17 = VAN WHEEL BASE 7	EG2 = 3.5L V6 Gas Engine EXM = 3.0L V6 Turbo Diesel Engine	DGZ = 5-Speed Auto W5A380 Transmission

AR = use ase required - = Non illustrrated part

<< RETURN TO GROUP INDEX

Rear Cross Member and Tow Hook
Figure 13-605

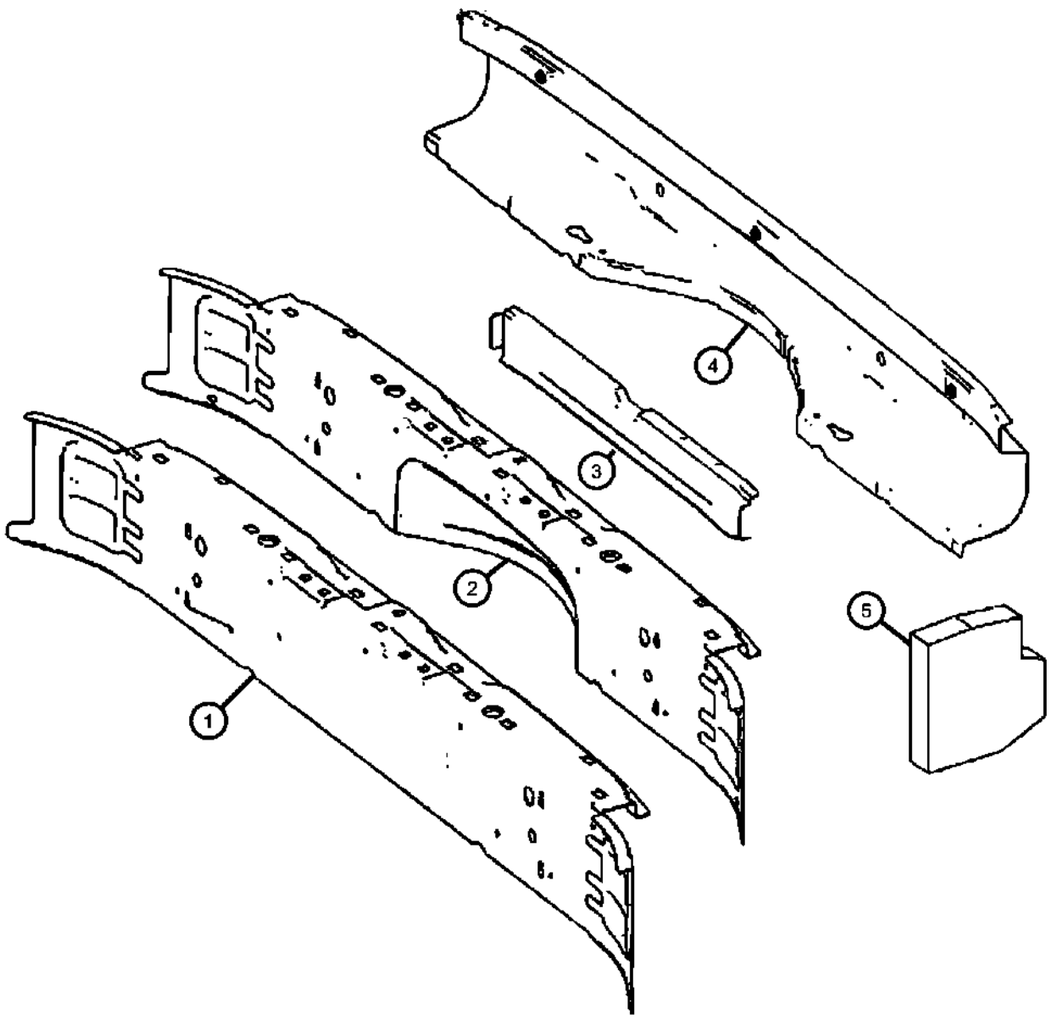

ITEM	PART NUMBER	QTY	LINE	SERIES	BODY	ENGINE	TRANS	TRIM	DESCRIPTION
1	68007823AA	1	2, 3, 6, 7	L	13, 15, 17, 53, 55				REINFORCEMENT, Bumper
2	68007822AA	1	2, 3, 6, 7	L	13, 15, 53, 55				REINFORCEMENT, Rear Bumper
3	68007838AA	2	3, 7	L	13, 15, 17, 53, 55				REINFORCEMENT, Bumper
4	68007833AA	1	2, 3, 6, 7	L	13, 15, 17, 53, 55				REINFORCEMENT, Rear Bumper
5	68007831AA	2	2, 3, 6, 7	L	13, 15, 17, 53, 55				SEAL

SPRINTER (VB)

SERIES	LINE	BODY	ENGINE	TRANSMISSION
L = LOWLINE	3 = HD DODGE 2WD 2 = Med. Duty DODGE 2WD	03 = CAB CHASSIS WHEEL BASE 3 05 = CAB CHASSIS WHEEL BASE 5 13 = 119 WB 53 = 119 WB 15 = VAN WHEEL BASE 5 55 = WAGON WHEEL BASE 5 17 = VAN WHEEL BASE 7	EG2 = 3.5L V6 Gas Engine EXM = 3.0L V6 Turbo Diesel Engine	DGZ = 5-Speed Auto W5A380 Transmission

Rear Trailer Hitch
Figure 13-610

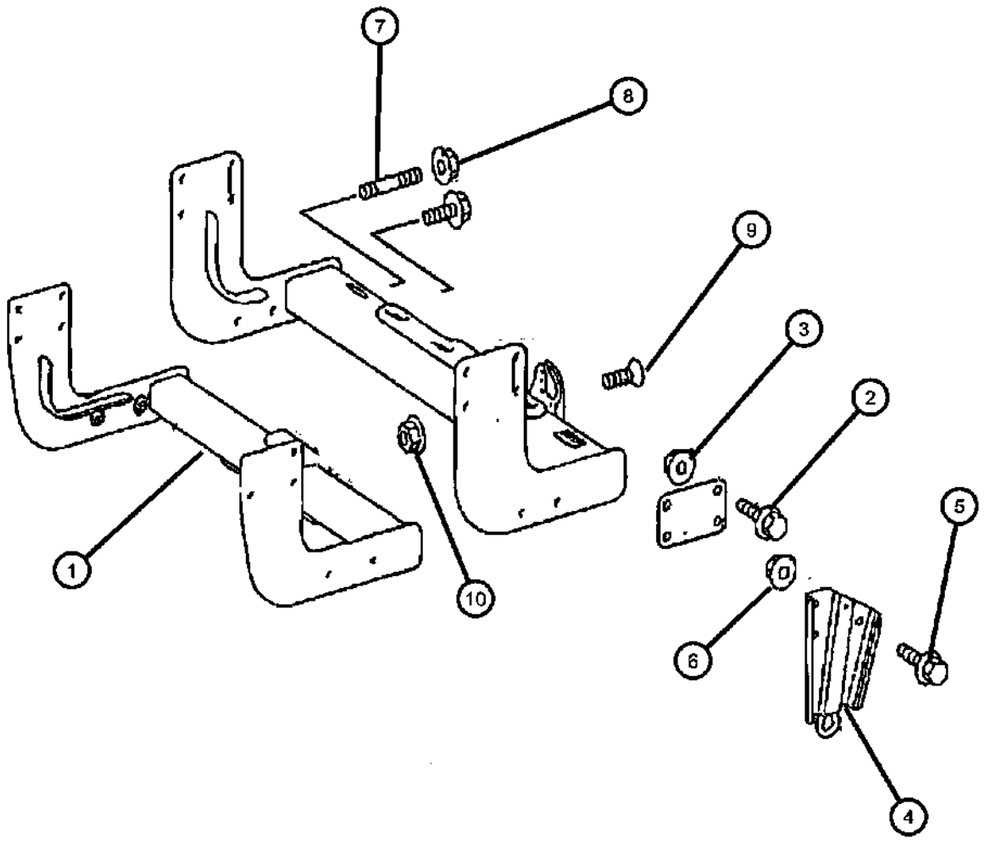

ITEM	PART NUMBER	QTY	LINE	SERIES	BODY	ENGINE	TRANS	TRIM	DESCRIPTION
Note: Parts shown in illustration without reference numbers are not serviced at this time.									
1									HITCH, Trailer
	68012499AA	1	2, 6	L					
	68012504AA	1	3, 7	L	15, 17				
	68012505AA	1	3, 7	L	13				
	68012569AA	1	3, 7	L	03, 05				
2									SCREW
	06104245AA	8	2, 3, 6, 7	L	13, 15, 17, 53, 55				
		8	3, 7	L	03, 05				
3									NUT
	06105171AA	8	2, 3, 6, 7	L	55, 13, 15, 17, 53				
		8	3, 7	L	03, 05				
4	68012511AA	2	2, 3, 6, 7	L					HOOK, Tow
5	06104245AA	3	2, 3, 6, 7	L	13, 15, 17, 53, 55				SCREW
6	06105171AA	3	2, 3, 6, 7	L	13, 15, 17, 53, 55				NUT
7									SCREW
	05128448AA	1	3, 7	L	15, 17				
		1	2, 6	L					
8	06105170AA	4	3, 7	L	03, 05				NUT
9									SCREW
	05125745AA	1	3, 7	L	15, 17				
		1	2, 6	L					
10	06105170AA	2	2, 3, 6, 7	L					NUT

SPRINTER (VB)

SERIES	LINE	BODY	ENGINE	TRANSMISSION
L = LOWLINE	3 = HD DODGE 2WD 2 = Med. Duty DODGE 2WD	03 = CAB CHASSIS WHEEL BASE 3 05 = CAB CHASSIS WHEEL BASE 5 13 = 119 WB 53 = 119 WB 15 = VAN WHEEL BASE 5 55 = WAGON WHEEL BASE 5 17 = VAN WHEEL BASE 7	EG2 = 3.5L V6 Gas Engine EXM = 3.0L V6 Turbo Diesel Engine	DGZ = 5-Speed Auto W5A380 Transmission

Group - 14

Fuel

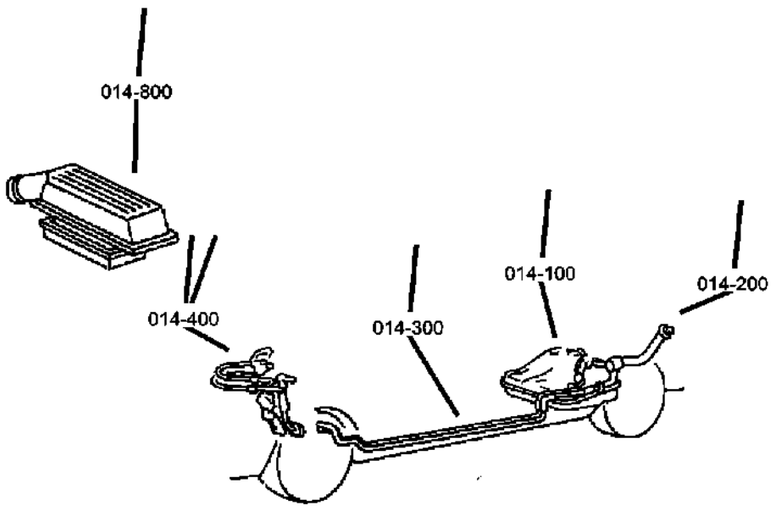

014-100 Tank, Fuel 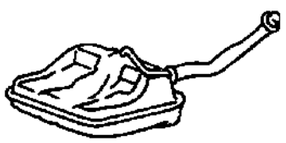	**014-1100** Accelerator Pedal 	**014-200** Fuel Tank Filler Tube 	**014-300** Fuel Lines 
014-400 Fuel Rail 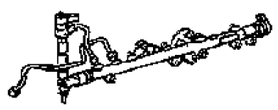	**014-500** Fuel Pump and Sending Unit 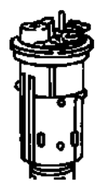	**014-600** Fuel Injection Pump & Turbo Charger 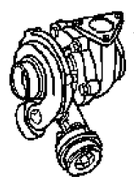	**014-800** Air Cleaner 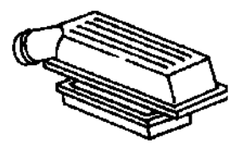

Group - 14 Fuel

Illustration Title — Group-Fig. No.

Tank, Fuel
Fuel Tank ..... Fig. 14 - 110

Fuel Tank Filler Tube
Fuel Tank Filler Tube ..... Fig. 14 - 210

Fuel Lines
Fuel Lines - Gas ..... Fig. 14 - 310
Fuel Lines - Diesel ..... Fig. 14 - 320
Fuel Line - Tank to Heating ..... Fig. 14 - 330
Fuel Filter & Fuel Return Lines ..... Fig. 14 - 340
Fuel Filter & Service Sensor ..... Fig. 14 - 350

Fuel Rail
Fuel Rail ..... Fig. 14 - 410
Fuel Rail ..... Fig. 14 - 420

Fuel Pump and Sending Unit
Fuel Pump & Sending Unit ..... Fig. 14 - 510
Fuel Pump & Sending Unit ..... Fig. 14 - 520

Fuel Injection Pump & Turbo Charger
High Pressure Pump ..... Fig. 14 - 610
Turbocharger ..... Fig. 14 - 620

Air Cleaner
Air Cleaner ..... Fig. 14 - 810

Accelerator Pedal
Accelerator Pedal ..... Fig. 14 - 1110

Fuel Tank
Figure 14-110

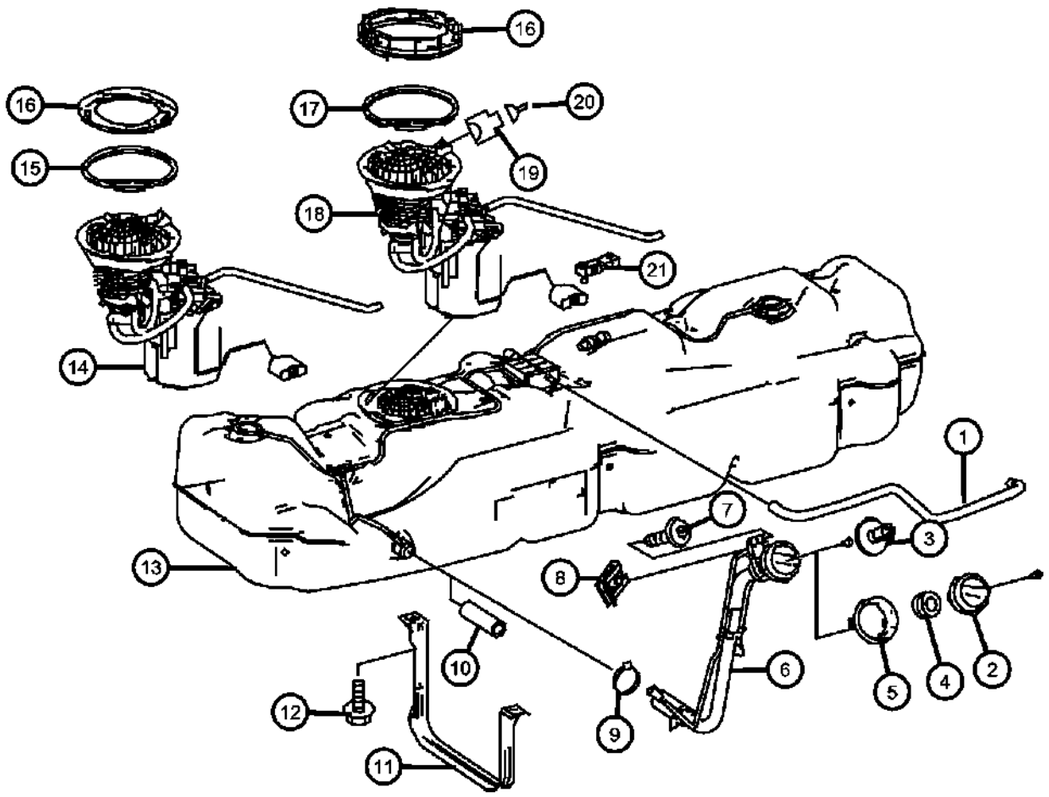

ITEM	PART NUMBER	QTY	LINE	SERIES	BODY	ENGINE	TRANS	TRIM	DESCRIPTION
Note: Fuel Filler neck Is Not Serviced For The Diesel Engine. Must Order Fuel Tank.									
1	68013509AA	1	2, 3, 6, 7	L		EXM	DGZ		HOSE, Breather Line
2									CAP, Fuel Filler
	68013500AA	1	2, 3, 6, 7	L		EG2	DGZ		
	68017092AA	1	2, 3, 6, 7	L		EXM	DGZ		
3									RIVET, Fuel Cap Tether
	05102963AA	1	2, 3, 6, 7	L	13, 15, 17, 53, 55	EG2, EXM	DGZ		5.2MM
		1	3, 7	L	03, 05	EG2, EXM	DGZ		5.2MM
4	05133408AA	1	2, 3, 6, 7	L		EXM	DGZ		GROMMET, Chassis Wiring, Breather Line 26x25x15
5	68013502AA	1	2, 3, 6, 7	L		EXM	DGZ		SEAL, Fuel Cap
6	68013499AA	1	2, 3, 6, 7	L		EG2	DGZ		TUBE, Fuel Filler, See Note:
7	06104120AA	1	2, 3, 6, 7	L		EG2, EXM	DGZ		SCREW, Hex Head, M6x12
8	68013488AA	1	2, 3, 6, 7	L		EXM	DGZ		NUT, Filler Pipe to Frame
9	05133494AA	1	3, 6, 7, 2	L		EG2	DGZ		CLAMP, Filler Pipe to Fuel Tank 25-40x13-SW8-W3
10	68013512AA	1	2, 3, 6, 7	L		EXM	DGZ		HOSE, Breather Line
11	68013514AA	1	2, 3, 6, 7	L		EG2, EXM	DGZ		STRAP, Fuel Tank
12	06104042AA	4	2, 3, 6, 7	L		EG2, EXM	DGZ		SCREW, Attachment Strap
13									TANK, Fuel
	68013485AA	1	2, 3, 6, 7	L		EXM	DGZ		
	68013486AA	1	2, 3, 6, 7	L		EG2	DGZ		
	68034449AA	1	3	L	05	EG2	DGZ		With [XFZ+AMG%AMK]
14	68013489AA	1	2, 3, 6, 7	L		EG2	DGZ		MODULE KIT, Fuel Pump/Level Unit
15	68013493AA	1	2, 3, 6, 7	L		EG2	DGZ		O RING
16	68013492AA	1	2, 3, 6, 7	L		EG2	DGZ		RING, Lock, Fuel Module
17	68013492AA	1							RING, (NOT SERVICED)
18	68013490AA	1	2, 3, 6, 7	L		EXM	DGZ		MODULE, Fuel Tank - Diesel
19	05135758AA	1	2, 3, 6, 7	L		EG2, EXM	DGZ		CONNECTOR, Female
20									TERMINAL
	05103877AA	AR	2, 3, 6, 7	L		EG2	DGZ		1.5-2.5MM2;M3/5

SPRINTER (VB)

SERIES	LINE	BODY	ENGINE	TRANSMISSION
L = LOWLINE	3 = HD DODGE 2WD 2 = Med. Duty DODGE 2WD	03 = CAB CHASSIS WHEEL BASE 3 05 = CAB CHASSIS WHEEL BASE 5 13 = 119 WB 53 = 119 WB 15 = VAN WHEEL BASE 5 55 = WAGON WHEEL BASE 5 17 = VAN WHEEL BASE 7	EG2 = 3.5L V6 Gas Engine EXM = 3.0L V6 Turbo Diesel Engine	DGZ = 5-Speed Auto W5A380 Transmission

AR = use ase required - = Non illustrrated part

<< RETURN TO GROUP INDEX

Fuel Tank
Figure 14-110

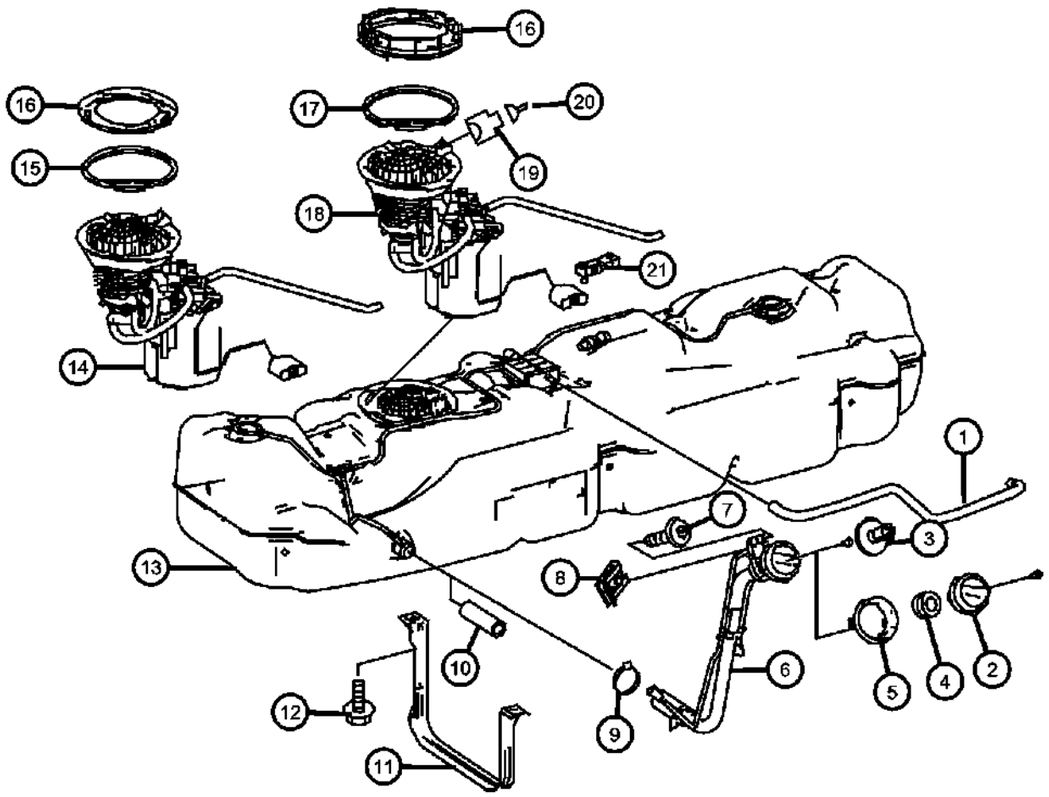

ITEM	PART NUMBER	QTY	LINE	SERIES	BODY	ENGINE	TRANS	TRIM	DESCRIPTION
	05133353AA	AR	2, 3, 6, 7	L		EG2	DGZ		0.5-1.0MM2;M3/5
21	68013498AA	1	2, 3, 6, 7	L		EG2	DGZ		SENSOR, Pressure, OBD 2

SPRINTER (VB)

SERIES	LINE	BODY	ENGINE	TRANSMISSION
L = LOWLINE	3 = HD DODGE 2WD 2 = Med. Duty DODGE 2WD	03 = CAB CHASSIS WHEEL BASE 3 05 = CAB CHASSIS WHEEL BASE 5 13 = 119 WB 53 = 119 WB 15 = VAN WHEEL BASE 5 55 = WAGON WHEEL BASE 5 17 = VAN WHEEL BASE 7	EG2 = 3.5L V6 Gas Engine EXM = 3.0L V6 Turbo Diesel Engine	DGZ = 5-Speed Auto W5A380 Transmission

AR = use ase required - = Non illustrrated part

<< RETURN TO GROUP INDEX

Fuel Tank Filler Tube
Figure 14-210

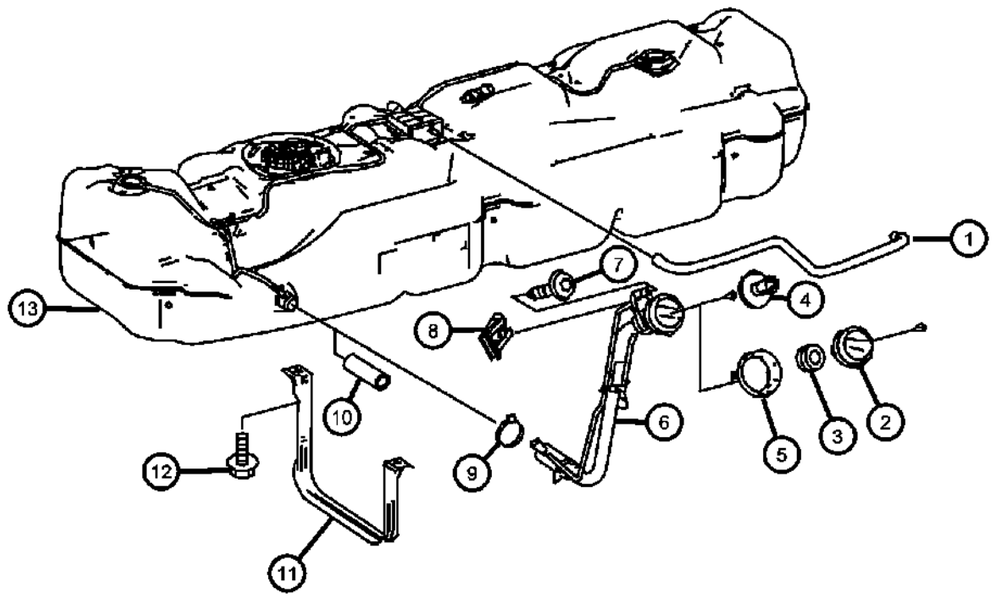

ITEM	PART NUMBER	QTY	LINE	SERIES	BODY	ENGINE	TRANS	TRIM	DESCRIPTION
Note:Fuel Filler Tube For Diesel Model Is Only Serviced With Compete Fuel Tank. For Fuel Tank Part Number Please See Illustration [510] Group [									
1	68013509AA	1	2, 3, 6, 7	L		EXM	DGZ		HOSE, Breather Line
2									CAP, Fuel Filler
	68013500AA	1	2, 3, 6, 7	L		EG2	DGZ		
	68017092AA	1	2, 3, 6, 7	L		EXM	DGZ		
3									RIVET, Fuel Cap Tether
	05102963AA	1	2, 3, 6, 7	L	13, 15, 17, 53, 55	EG2, EXM	DGZ		5.2MM
		1	3, 7	L	03, 05	EG2, EXM	DGZ		5.2MM
4	05133408AA	1	2, 3, 6, 7	L		EXM	DGZ		GROMMET, Chassis Wiring, Breather Line 26x25x15
5	68013502AA	1	2, 3, 6, 7	L		EXM	DGZ		SEAL, Fuel Cap
6	68013499AA	1	2, 3, 6, 7	L		EG2	DGZ		TUBE, Fuel Filler, See Note:
7	06104120AA	1	2, 3, 6, 7	L		EG2, EXM	DGZ		SCREW, Hex Head, M6x12
8	68013488AA	1	7, 2, 3, 6	L		EXM	DGZ		NUT, Filler Pipe to Frame
9									CLAMP
	05132913AA	1	2, 3, 6, 7	L		EXM	DGZ		Filler Pipe to Fuel Tank 25-40x13-SW8-W3
	05133494AA	1	2, 3, 6, 7	L		EG2	DGZ		Filler Pipe to Fuel Tank 25-40x13-SW8-W3
10	68013512AA	1	2, 3, 6, 7	L		EXM	DGZ		HOSE, Breather Line
11	68013514AA	1	2, 3, 6, 7	L		EG2, EXM	DGZ		STRAP, Fuel Tank
12	06104042AA	4	2, 3, 6, 7	L		EG2, EXM	DGZ		SCREW, Attachment Strap
13									TANK, Fuel
	68013485AA	1	2, 3, 6, 7	L		EXM	DGZ		
	68013486AA	1	2, 3, 6, 7	L		EG2	DGZ		

SPRINTER (VB)

SERIES	LINE	BODY	ENGINE	TRANSMISSION
L = LOWLINE	3 = HD DODGE 2WD 2 = Med. Duty DODGE 2WD	03 = CAB CHASSIS WHEEL BASE 3 05 = CAB CHASSIS WHEEL BASE 5 13 = 119 WB 53 = 119 WB 15 = VAN WHEEL BASE 5 55 = WAGON WHEEL BASE 5 17 = VAN WHEEL BASE 7	EG2 = 3.5L V6 Gas Engine EXM = 3.0L V6 Turbo Diesel Engine	DGZ = 5-Speed Auto W5A380 Transmission

Fuel Lines - Gas
Figure 14-310

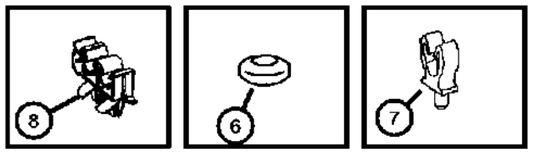

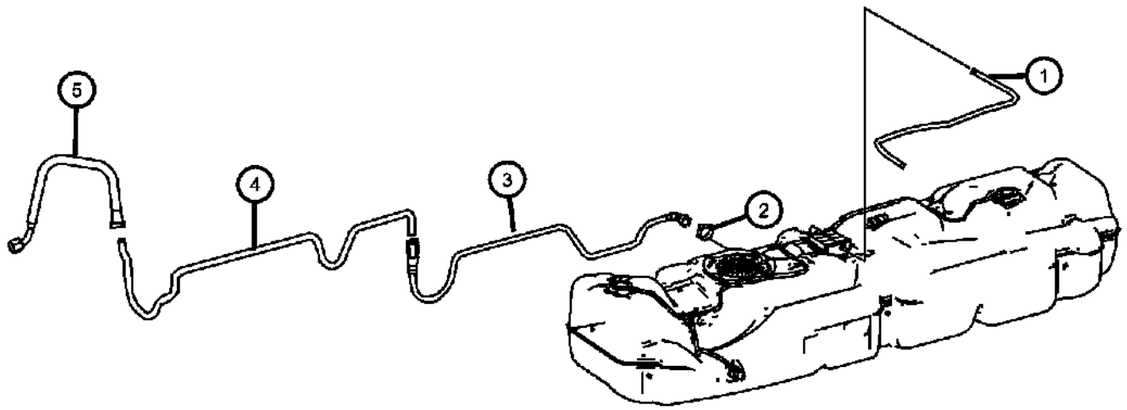

ITEM	PART NUMBER	QTY	LINE	SERIES	BODY	ENGINE	TRANS	TRIM	DESCRIPTION
1	68013506AA	1	2, 3, 6, 7	L		EG2	DGZ		TUBE, Fuel
2	06104819AA	2	2, 3, 6, 7	L		EXM	DGZ		TIE STRAP, 11.5MM
3	68013495AA	1	2, 3, 6, 7	L		EG2	DGZ		TUBE, Fuel Supply
4	68013531AA	1	2, 3, 6, 7	L		EG2	DGZ		TUBE, Fuel Supply
5									TUBE, Fuel Supply
	68013532AA	1	2, 3, 6, 7	L		EG2	DGZ		Up To Chassis Build Date [08/31/2006]
	68017801AA	1	2, 3, 6, 7	L		EG2	DGZ		After Chassis Build Date [08/31/2006]
6	68013507AA	1	2, 3, 6, 7	L		EG2	DGZ		GROMMET, Chafe Protection to Console,B-Pillar
7	68013516AA	1	2, 3, 6, 7	L	13, 15, 17, 53, 55	EG2	DGZ		RETAINER
8	68013508AA	2	2, 3, 6, 7	L		EG2, EXM	DGZ		RETAINER

SPRINTER (VB)

SERIES	LINE	BODY	ENGINE	TRANSMISSION
L = LOWLINE	3 = HD DODGE 2WD 2 = Med. Duty DODGE 2WD	03 = CAB CHASSIS WHEEL BASE 3 05 = CAB CHASSIS WHEEL BASE 5 13 = 119 WB 53 = 119 WB 15 = VAN WHEEL BASE 5 55 = WAGON WHEEL BASE 5 17 = VAN WHEEL BASE 7	EG2 = 3.5L V6 Gas Engine EXM = 3.0L V6 Turbo Diesel Engine	DGZ = 5-Speed Auto W5A380 Transmission

Fuel Lines - Diesel
Figure 14-320

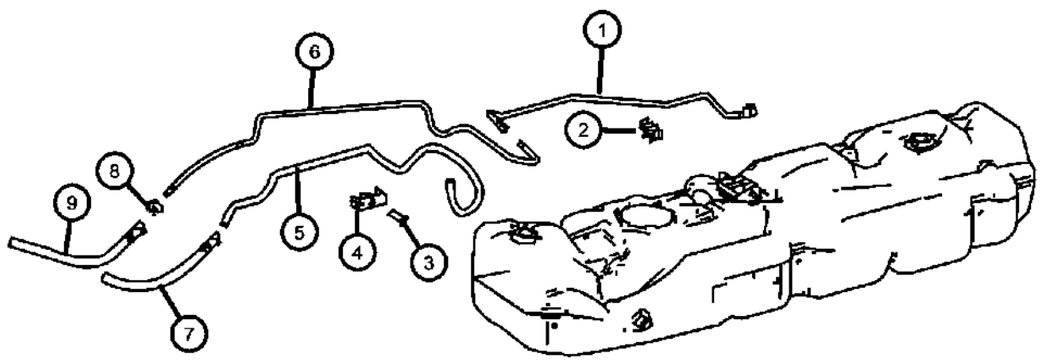

ITEM	PART NUMBER	QTY	LINE	SERIES	BODY	ENGINE	TRANS	TRIM	DESCRIPTION
1	68013494AA	1	2, 3, 6, 7	L		EXM	DGZ		TUBE, Fuel Supply
2	68013508AA	2	2, 3, 6, 7	L		EG2	DGZ		RETAINER, Fuel Line to Fuel Tank
3									BOLT, Hex Head
	05133748AA	2	3, 7	L	03, 05	EXM	DGZ		M6x20
		2	2, 3, 6, 7	L	13, 15, 17, 53, 55	EXM	DGZ		M6x20
4	05137250AA	4	2, 3, 6, 7	L		EXM	DGZ		CLIP, Feed Line to Return Line
5	68013527AA	1	2, 3, 6, 7	L		EXM	DGZ		TUBE, Fuel Return Line
6	68013525AA	1	2, 3, 6, 7	L		EXM	DGZ		TUBE, Fuel Supply
7	68013528AA	1	2, 3, 6, 7	L		EXM	DGZ		TUBE, Fuel Return Line
8	68013529AA	1	2, 3, 6, 7	L		EXM	DGZ		CLAMP, Hose
9	68013526AA	1	2, 3, 6, 7	L		EXM	DGZ		TUBE, Fuel Supply

SPRINTER (VB)

SERIES	LINE	BODY	ENGINE	TRANSMISSION
L = LOWLINE	3 = HD DODGE 2WD 2 = Med. Duty DODGE 2WD	03 = CAB CHASSIS WHEEL BASE 3 05 = CAB CHASSIS WHEEL BASE 5 13 = 119 WB 53 = 119 WB 15 = VAN WHEEL BASE 5 55 = WAGON WHEEL BASE 5 17 = VAN WHEEL BASE 7	EG2 = 3.5L V6 Gas Engine EXM = 3.0L V6 Turbo Diesel Engine	DGZ = 5-Speed Auto W5A380 Transmission

Fuel Line - Tank to Heating
Figure 14-330

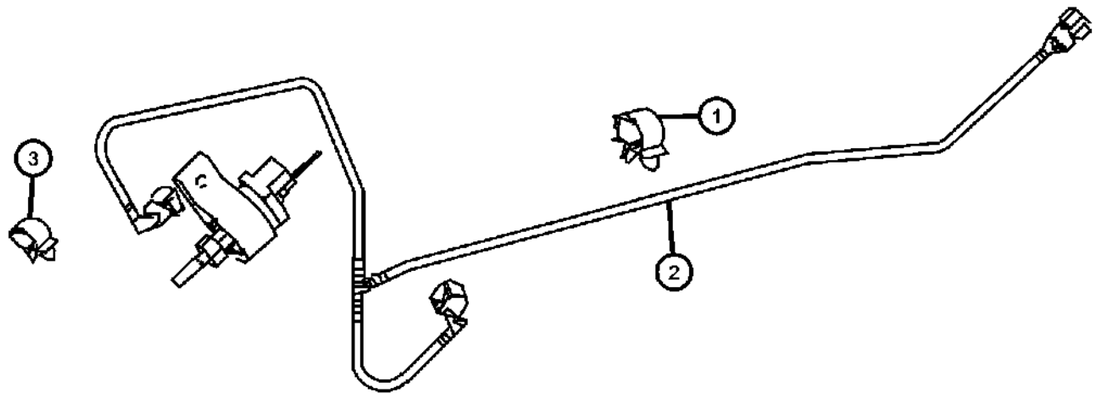

ITEM	PART NUMBER	QTY	LINE	SERIES	BODY	ENGINE	TRANS	TRIM	DESCRIPTION
1	05103736AA	2	2, 3, 6, 7	L	15, 17, 53, 55, 13	EG2, EXM	DGZ		CLAMP, 6.5x12.8MM
2									TUBE, Fuel
	68012825AA	1	2, 3, 6, 7	L	13, 15, 17, 53, 55	EXM	DGZ		With [XG3]
	68012826AA	1	2, 3, 6, 7	L	13, 15, 17, 53, 55	EXM	DGZ		With [3JV And Or HDB]
3	05103736AA	2	2, 3, 6, 7	L	13, 15, 17, 53, 55	EG2, EXM	DGZ		CLAMP, 6.5x12.8MM

SPRINTER (VB)

SERIES	LINE	BODY	ENGINE	TRANSMISSION
L = LOWLINE	3 = HD DODGE 2WD 2 = Med. Duty DODGE 2WD	03 = CAB CHASSIS WHEEL BASE 3 05 = CAB CHASSIS WHEEL BASE 5 13 = 119 WB 53 = 119 WB 15 = VAN WHEEL BASE 5 55 = WAGON WHEEL BASE 5 17 = VAN WHEEL BASE 7	EG2 = 3.5L V6 Gas Engine EXM = 3.0L V6 Turbo Diesel Engine	DGZ = 5-Speed Auto W5A380 Transmission

Fuel Filter & Fuel Return Lines
Figure 14-340

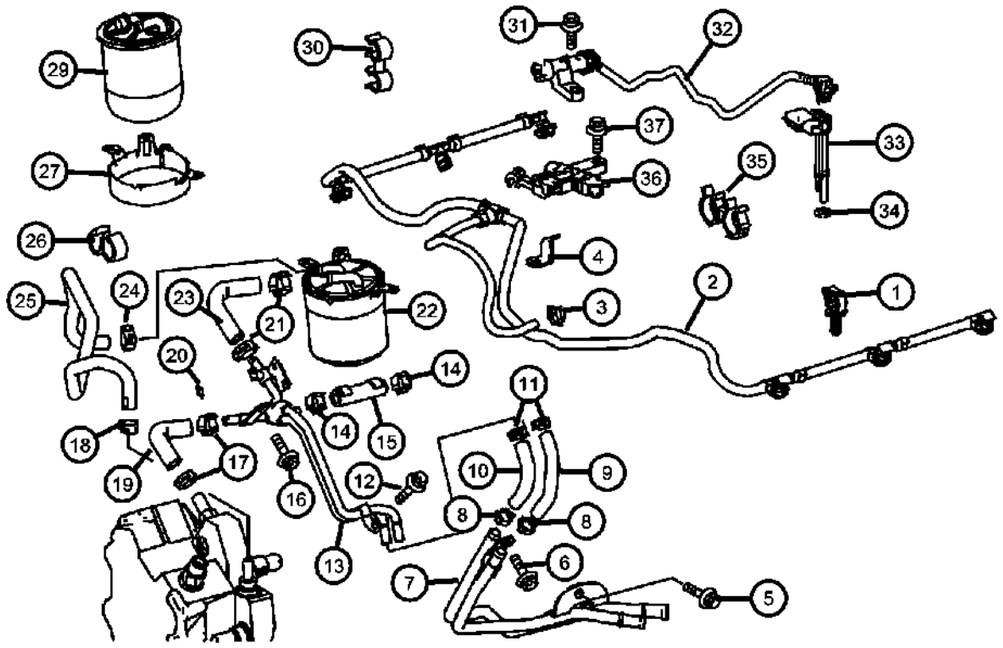

ITEM	PART NUMBER	QTY	LINE	SERIES	BODY	ENGINE	TRANS	TRIM	DESCRIPTION
1	68005721AA	1	2, 3, 6, 7	L		EXM	DGZ		RETAINER
2	68005720AA	1	2, 3, 6, 7	L		EXM	DGZ		TUBE, Fuel Return
3									CLAMP
	05080439AB	1	3, 7	L	03, 05	EG2	DGZ		
		1	2, 6	L	13, 15, 17, 53, 55	EG2	DGZ		
		1	2, 3, 6, 7	L		EXM	DGZ		
4	05175596AA	1	2, 3, 6, 7	L		EXM	DGZ		BRACKET
5	06104085AA	1	2, 3, 6, 7	L		EXM	DGZ		SCREW
6									BOLT
	06104005AA	1	3, 7	L	03, 05	EXM	DGZ		M6x16
		1	2, 3, 6, 7	L	13, 15, 17, 53, 55	EXM	DGZ		M6x16
		3	2, 3, 6, 7	L		EG2	DGZ		M6x16
7	68005709AA	1	2, 3, 6, 7	L		EXM	DGZ		TUBE, Fuel
8	05126026AA	2	2, 3, 6, 7	L		EXM	DGZ		CLAMP, Hose
9	68005702AA	1	2, 3, 6, 7	L		EXM	DGZ		TUBE, Fuel
10	05175592AB	1	2, 3, 6, 7	L		EXM	DGZ		TUBE, Fuel
11	05126026AA	2	6, 7, 2, 3	L		EXM	DGZ		CLAMP, Hose
12									SCREW
	06104681AA	1	3, 7	L	03, 05	EG2, EXM	DGZ		M6x15
		1	2, 6	L	13, 15, 17, 53, 55	EG2, EXM	DGZ		M6x15
13	68005713AA	1	2, 3, 6, 7	L		EXM	DGZ		TUBE, Fuel
14									CLAMP
	05080439AB	1	3, 7	L	03, 05	EG2	DGZ		12.5-13.5/8MM
		1	2, 6	L	13, 15, 17, 53, 55	EG2	DGZ		12.5-13.5/8MM
		1	2, 3, 6, 7	L		EXM	DGZ		12.5-13.5/8MM
15	68005707AA	1	2, 3, 6, 7	L		EXM	DGZ		HOSE, Fuel
16									BOLT
	06104004AA	1	3, 7	L	03, 05	EXM	DGZ		M6x12
		1	2, 3, 6, 7	L	13, 15, 17, 53, 55	EXM	DGZ		M6x12
		1	2, 3, 6, 7	L		EG2	DGZ		M6x12

SPRINTER (VB)

SERIES	LINE	BODY	ENGINE	TRANSMISSION
L = LOWLINE	3 = HD DODGE 2WD 2 = Med. Duty DODGE 2WD	03 = CAB CHASSIS WHEEL BASE 3 05 = CAB CHASSIS WHEEL BASE 5 13 = 119 WB 53 = 119 WB 15 = VAN WHEEL BASE 5 55 = WAGON WHEEL BASE 5 17 = VAN WHEEL BASE 7	EG2 = 3.5L V6 Gas Engine EXM = 3.0L V6 Turbo Diesel Engine	DGZ = 5-Speed Auto W5A380 Transmission

Fuel Filter & Fuel Return Lines
Figure 14-340

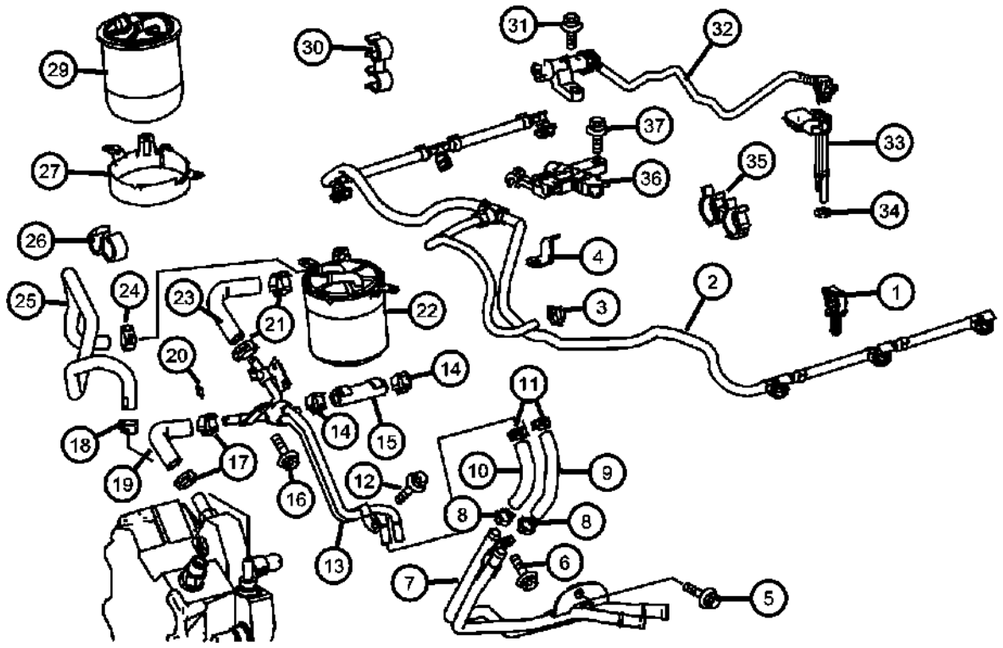

ITEM	PART NUMBER	QTY	LINE	SERIES	BODY	ENGINE	TRANS	TRIM	DESCRIPTION
17	05126026AA	2	2, 3, 6, 7	L		EXM	DGZ		CLAMP, Hose
18									CLAMP
	05080439AB	1	3, 7	L	03, 05	EG2	DGZ		12.5-13.5/8MM
		1	2, 6	L	13, 15, 17, 53, 55	EG2	DGZ		12.5-13.5/8MM
		1	2, 3, 6, 7	L		EXM	DGZ		12.5-13.5/8MM
19									HOSE, Fuel
	68025119AA	1	2, 3, 6, 7	L	55, 13, 15, 17, 53	EXM	DGZ		High Pressure Pump to Fuel Line
		1	3, 7	L	03, 05	EXM	DGZ		High Pressure Pump to Fuel Line
20	68005701AA	1	2, 3, 6, 7	L		EXM	DGZ		CLAMP
21	05126026AA	2	7, 2, 3, 6	L		EXM	DGZ		CLAMP, Hose
22	05175429AB	1	2, 3, 6, 7	L		EXM	DGZ		FILTER, Fuel
23	68005715AA	1	2, 3, 6, 7	L		EXM	DGZ		HOSE, Fuel, Separation Point for Filter
24									CLAMP
	05080439AB	1	3, 7	L	03, 05	EG2	DGZ		
		1	2, 6	L	13, 15, 17, 53, 55	EG2	DGZ		
		1	2, 3, 6, 7	L		EXM	DGZ		
25	68005717AA	1	2, 3, 6, 7	L		EXM	DGZ		HOSE, Fuel, At Injection Pump
26	05170616AA	1	2, 3, 6, 7	L		EXM	DGZ		CLAMP
27	68005729AA	1	2, 3, 6, 7	L		EXM	DGZ		BRACKET, Fuel Filter
-28	68021057AA	1	2, 3, 6, 7	L		EXM	DGZ		BRACKET, Holder
29	05175429AB	1	2, 3, 6, 7	L		EXM	DGZ		FILTER, Fuel
30	68005734AA	2	2, 3, 6, 7	L		EXM	DGZ		CLAMP, CLAMP
31	06104006AA	1	2, 3, 6, 7	L		EXM	DGZ		BOLT, M6x20
32	68021058AA	1	2, 3, 6, 7	L		EXM	DGZ		HOSE, Fuel
33	05117542AA	1	2, 3, 6, 7	L		EXM	DGZ		SENSOR, Fuel/Water, Water Level
34	05138876AA	1	2, 3, 6, 7	L		EXM	DGZ		O RING
35	05127508AA	1	2, 3, 6, 7	L		EXM	DGZ		CLAMP, Hose, 14-16MM
36	05175595AA	1	2, 3, 6, 7	L		EXM	DGZ		BRACKET
37									SCREW

SPRINTER (VB)

SERIES	LINE	BODY	ENGINE	TRANSMISSION
L = LOWLINE	3 = HD DODGE 2WD 2 = Med. Duty DODGE 2WD	03 = CAB CHASSIS WHEEL BASE 3 05 = CAB CHASSIS WHEEL BASE 5 13 = 119 WB 53 = 119 WB 15 = VAN WHEEL BASE 5 55 = WAGON WHEEL BASE 5 17 = VAN WHEEL BASE 7	EG2 = 3.5L V6 Gas Engine EXM = 3.0L V6 Turbo Diesel Engine	DGZ = 5-Speed Auto W5A380 Transmission

Fuel Filter & Fuel Return Lines
Figure 14-340

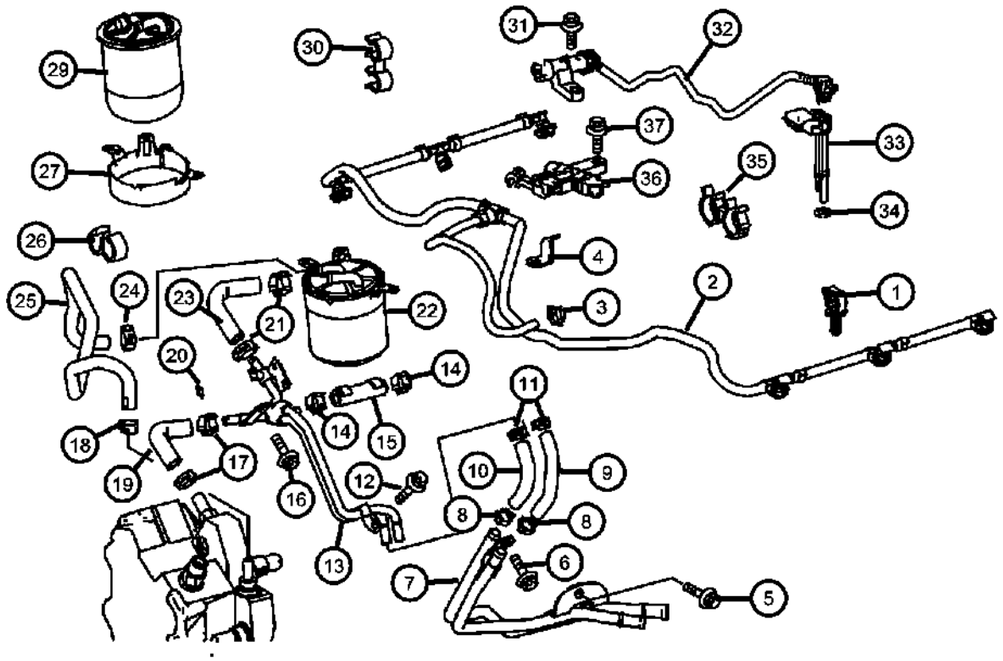

ITEM	PART NUMBER	QTY	LINE	SERIES	BODY	ENGINE	TRANS	TRIM	DESCRIPTION
	06104683AA	2	2, 3, 6, 7	L		EG2	DGZ		M6x23
		2	2, 3, 6, 7	L		EXM	DGZ		M6x23

SPRINTER (VB)

SERIES	LINE	BODY	ENGINE	TRANSMISSION
L = LOWLINE	3 = HD DODGE 2WD 2 = Med. Duty DODGE 2WD	03 = CAB CHASSIS WHEEL BASE 3 05 = CAB CHASSIS WHEEL BASE 5 13 = 119 WB 53 = 119 WB 15 = VAN WHEEL BASE 5 55 = WAGON WHEEL BASE 5 17 = VAN WHEEL BASE 7	EG2 = 3.5L V6 Gas Engine EXM = 3.0L V6 Turbo Diesel Engine	DGZ = 5-Speed Auto W5A380 Transmission

Fuel Filter & Service Sensor
Figure 14-350

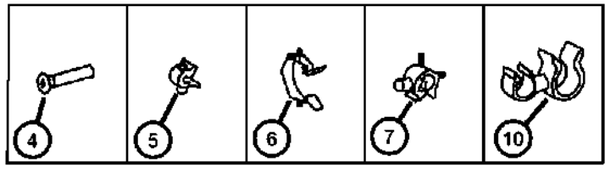

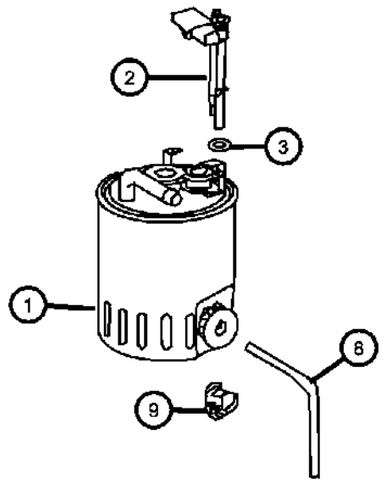

ITEM	PART NUMBER	QTY	LINE	SERIES	BODY	ENGINE	TRANS	TRIM	DESCRIPTION
1	05175429AA	1	2, 3, 6, 7	L		EXM	DGZ		FILTER, Fuel
2	05117542AA	1	2, 3, 6, 7	L		EXM	DGZ		SENSOR, Fuel/Water
3	05179861AA	2	2, 3, 6, 7	L		EXM	DGZ		O RING
4	05073900AA	1	2, 3, 6, 7	L		EXM	DGZ		SCREW, To Fuel Filter
5	05080431AB	1	2, 6	L	53, 55	EG2, EXM	DGZ		CLAMP, Hose To Fuel Filter [11 MM]
6	06104925AA	1	2, 3, 6, 7	L		EXM	DGZ		CLAMP, To Fuel Filter [38 MM]
7									CLIP, Retaining
	06104924AA	1	3, 7	L	03, 05	EXM	DGZ		Drain Hose [11 MM]
		1	6, 7, 2, 3	L	13, 15, 17, 53, 55	EXM	DGZ		Drain Hose [11 MM]
8									HOSE
	05138943AA	1	2, 3, 6, 7	L	13, 15, 17, 53, 55	EXM	DGZ		
		1	3, 7	L	03, 05	EXM	DGZ		
9	68020907AA	2	2, 3, 6, 7	L		EXM	DGZ		CLIP, Drain Hose [18 x 14 MM]
10	68020908AA	1	2, 3, 6, 7	L		EXM	DGZ		BRACKET

SPRINTER (VB)

SERIES	LINE	BODY	ENGINE	TRANSMISSION
L = LOWLINE	3 = HD DODGE 2WD 2 = Med. Duty DODGE 2WD	03 = CAB CHASSIS WHEEL BASE 3 05 = CAB CHASSIS WHEEL BASE 5 13 = 119 WB 53 = 119 WB 15 = VAN WHEEL BASE 5 55 = WAGON WHEEL BASE 5 17 = VAN WHEEL BASE 7	EG2 = 3.5L V6 Gas Engine EXM = 3.0L V6 Turbo Diesel Engine	DGZ = 5-Speed Auto W5A380 Transmission

Fuel Rail
Figure 14-410

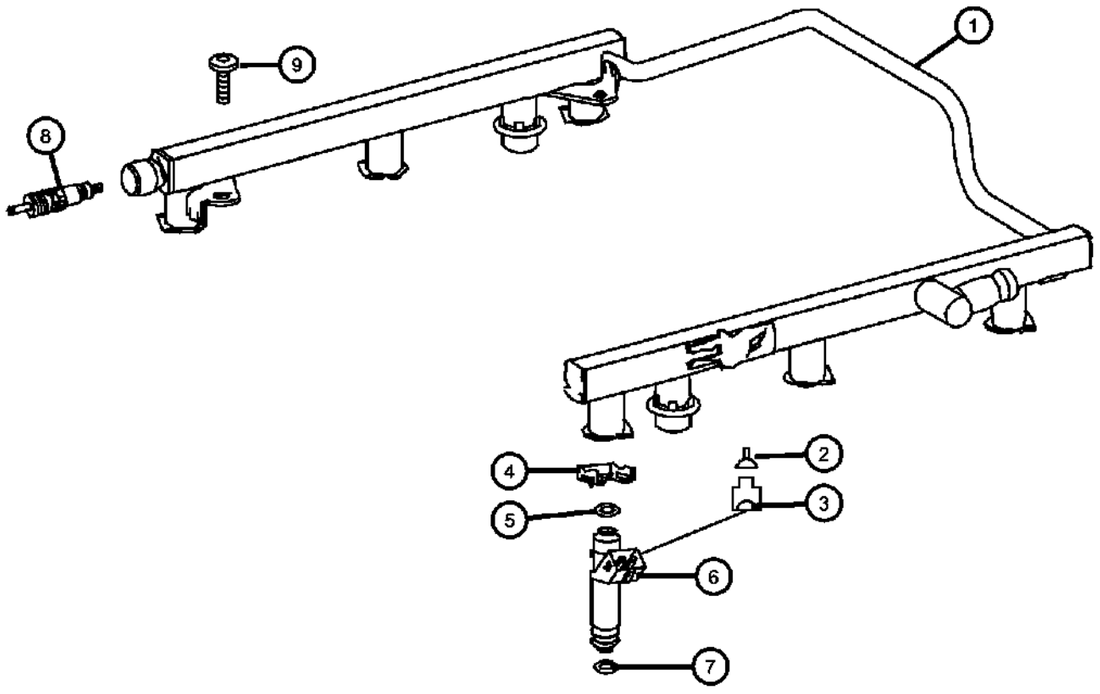

ITEM	PART NUMBER	QTY	LINE	SERIES	BODY	ENGINE	TRANS	TRIM	DESCRIPTION
1	68011691AA	1	2, 3, 6, 7	L		EG2	DGZ		RAIL, Fuel
2	68011877AA	AR	2, 3, 6, 7	L		EG2	DGZ		TERMINAL
3	68011801AA	6	2, 3, 6, 7	L		EG2	DGZ		CONNECTOR
4	05097191AA	6	2, 3, 6, 7	L		EG2	DGZ		CLIP, Fuel Injector
5	05101151AA	6	2, 3, 6, 7	L		EG2	DGZ		O RING, Fuel Injector
6	68011710AA	6	2, 3, 6, 7	L		EG2	DGZ		INJECTOR, Fuel
7	68011714AA	6	2, 3, 6, 7	L		EG2	DGZ		O RING, Fuel Injector
8	05101486AA	1	2, 3, 6, 7	L		EG2	DGZ		VALVE
9									SCREW
	06104681AA	4	3, 7	L	03, 05	EG2	DGZ		Fuel Distributor to Intake Manifold M6x15
		4	2, 6	L	13, 15, 17, 53, 55	EG2	DGZ		Fuel Distributor to Intake Manifold M6x15

SPRINTER (VB)

SERIES	LINE	BODY	ENGINE	TRANSMISSION
L = LOWLINE	3 = HD DODGE 2WD 2 = Med. Duty DODGE 2WD	03 = CAB CHASSIS WHEEL BASE 3 05 = CAB CHASSIS WHEEL BASE 5 13 = 119 WB 53 = 119 WB 15 = VAN WHEEL BASE 5 55 = WAGON WHEEL BASE 5 17 = VAN WHEEL BASE 7	EG2 = 3.5L V6 Gas Engine EXM = 3.0L V6 Turbo Diesel Engine	DGZ = 5-Speed Auto W5A380 Transmission

Fuel Rail
Figure 14-420

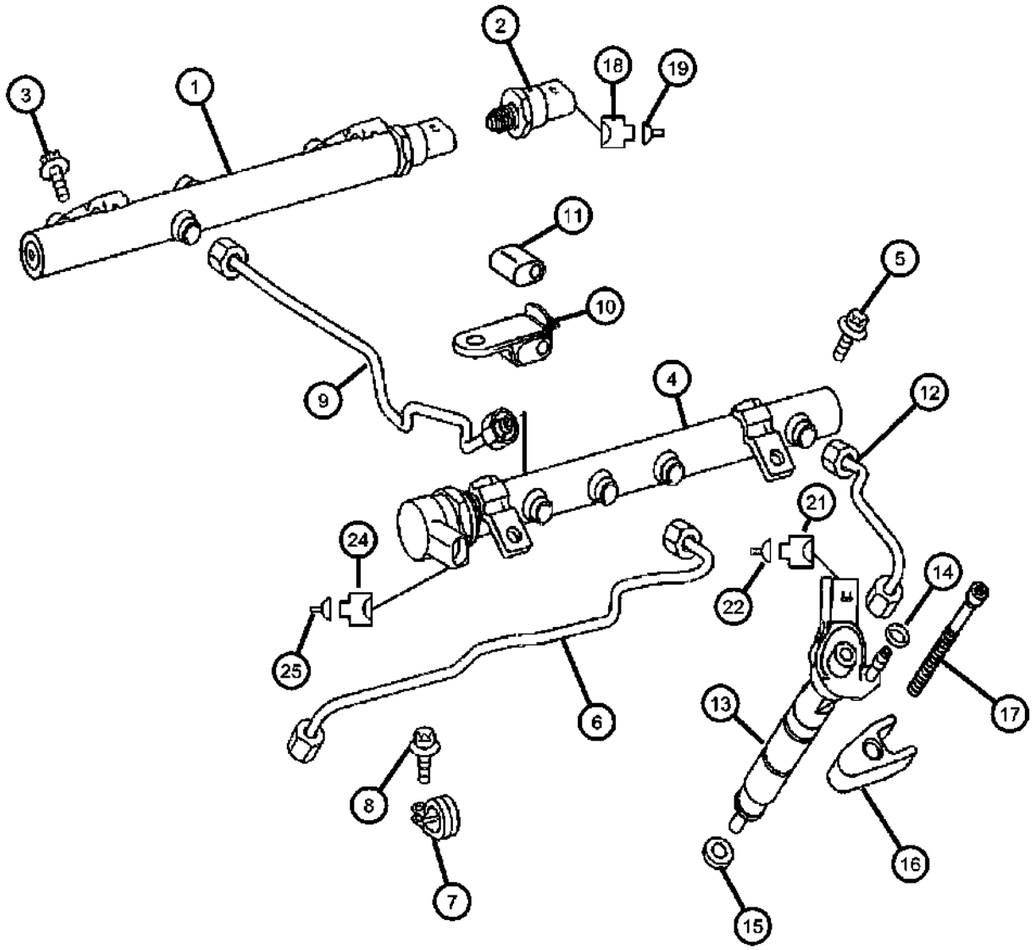

ITEM	PART NUMBER	QTY	LINE	SERIES	BODY	ENGINE	TRANS	TRIM	DESCRIPTION
1	68014064AA	1	2, 3, 6, 7	L		EXM	DGZ		DISTRIBUTOR, FuelRight
2	68014067AA	1	2, 3, 6, 7	L		EXM	DGZ		SENDING UNIT, Fuel
3	05073701AA	2	2, 3, 6, 7	L		EXM	DGZ		SCREW, Fuel Rail To Head [M7x20]
4	68014068AA	1	2, 3, 6, 7	L		EXM	DGZ		DISTRIBUTOR, FuelLeft
5	05073701AA	2	2, 3, 6, 7	L		EXM	DGZ		SCREW, Fuel Rail To Cylinder Head [M7x20]
6	05175612AA	1	2, 3, 6, 7	L		EXM	DGZ		TUBE, Fuel Injector Supply, From High Pressure Pump To Fuel Rail
7	05126113AA	1	2, 3, 6, 7	L		EXM	DGZ		CLAMP, Delivery Line To Cylinfder Cover
8	06104682AA	1	2, 3, 6, 7	L		EXM	DGZ		BOLT, Delivery Line To Cylinder Head Cover [6x19]
9	05175618AA	1	2, 3, 6, 7	L		EXM	DGZ		TUBE, Crossover Fuel Line
10	05080296AA	2	2, 3, 6, 7	L		EXM	DGZ		BRACKET, Tube, Delivery Line To Cylinder Cover
11	05080297AA	2	2, 3, 6, 7	L		EXM	DGZ		SHIM, Rubber Insert
12	05175619AA	3	2, 3, 6, 7	L		EXM	DGZ		TUBERight & Left
13									INJECTOR, Fuel
	68014079AA	6	2, 3, 6, 7	L		EXM	DGZ		Up To Engine Assembly Number [40346214] / Engine Assembly Built Date [01/02/2007]
	68028404AA	6	2, 3, 6, 7	L		EXM	DGZ		Arter Engine Assemly Number [40346214] / Engine Assembly Built Date [01/02/2007]
14	68014080AA	6	2, 3, 6, 7	L		EXM	DGZ		O RING, Injector To Leak Line
15	05080301AA	3	2, 3, 6, 7	L		EXM	DGZ		O RING, Fuel Injector
16	05175620AA	6	2, 3, 6, 7	L		EXM	DGZ		BRACKET, Fuel Line
17	68001053AA	3	2, 3, 6, 7	L		EXM	DGZ		SCREW, Injector To Cylinder Head [M6x79], Right & Left
18	05120759AA	1	2, 3, 6, 7	L		EG2, EXM	DGZ		CONNECTOR, [3 Pin / B4/7 - B4/6]
19	05133353AA	AR	2, 3, 6, 7	L		EXM	DGZ		TERMINAL, [0.25 - 0.5 MM2; B4/7 B4/6]
-20	05103661AA	1	2, 3, 6, 7	L		EG2, EXM	DGZ		GASKET, [0.5 - 1.0 MM2; B4/7; B4/6]
21	05103931AA	6	2, 3, 6, 7	L		EXM	DGZ		CONNECTOR, Fuel Injector Connector [2 Pin; Y76/1 - Y76/6; Y110/1 - Y110/6]
22	05133353AA	AR	2, 3, 6, 7	L		EXM	DGZ		TERMINAL, Fuel Injector Connector [MM2; Y76/1 - Y76/6; Y110/1 - Y110/6]

SPRINTER (VB)

SERIES	LINE	BODY	ENGINE	TRANSMISSION
L = LOWLINE	3 = HD DODGE 2WD 2 = Med. Duty DODGE 2WD	03 = CAB CHASSIS WHEEL BASE 3 05 = CAB CHASSIS WHEEL BASE 5 13 = 119 WB 53 = 119 WB 15 = VAN WHEEL BASE 5 55 = WAGON WHEEL BASE 5 17 = VAN WHEEL BASE 7	EG2 = 3.5L V6 Gas Engine EXM = 3.0L V6 Turbo Diesel Engine	DGZ = 5-Speed Auto W5A380 Transmission

Fuel Rail
Figure 14-420

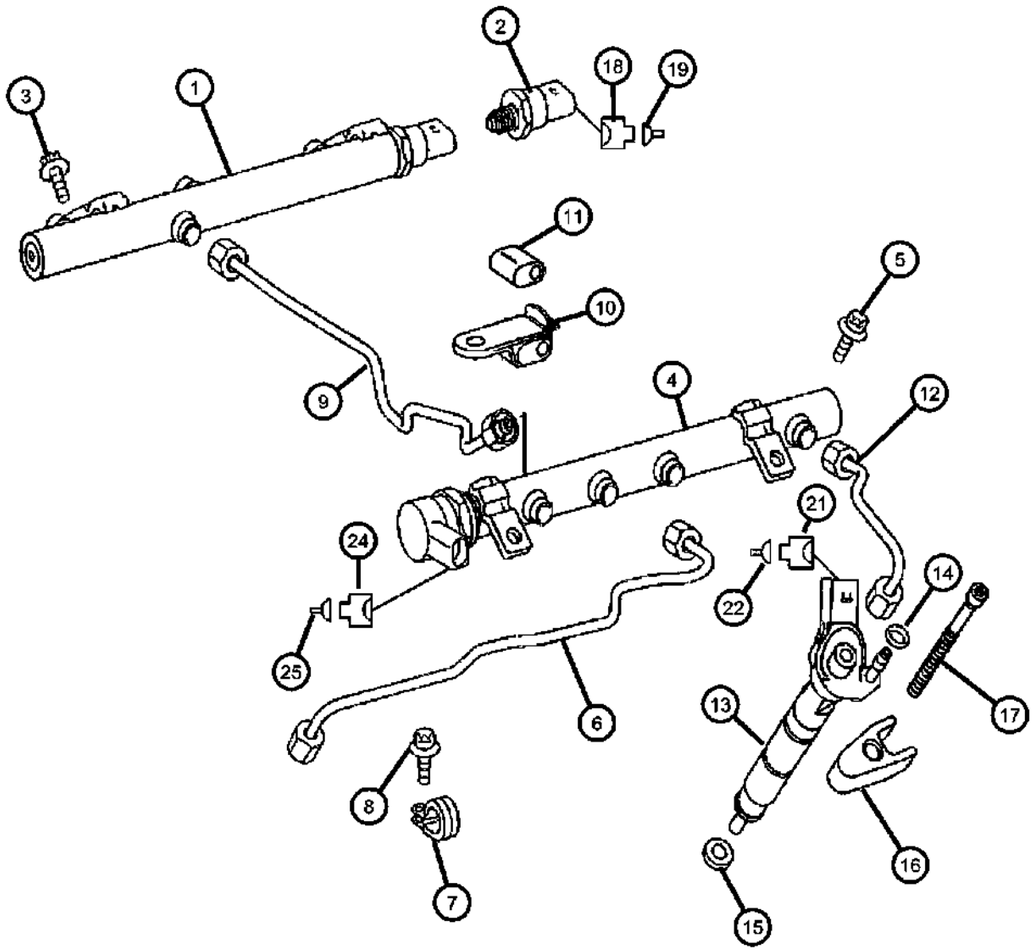

ITEM	PART NUMBER	QTY	LINE	SERIES	BODY	ENGINE	TRANS	TRIM	DESCRIPTION
-23	05103661AA	1	2, 3, 6, 7	L		EG2, EXM	DGZ		GASKET, Connector Gasket [MM;Y76/1 - Y76/6; Y110/1 - Y110/6]
24	05135841AA	1	2, 6, 7	L		EXM	DGZ		CONNECTOR, [2Pin; B; Y74]
25	05133353AA	AR	2, 3, 6, 7	L		EXM	DGZ		TERMINAL, Pressure Valve [.05 - 1.0; MM2; Y74]
-26	05103661AA	1	2, 3, 6, 7	L		EG2, EXM	DGZ		GASKET, Pressure Valve [.05 - 1.0; MM2; Y74]

SPRINTER (VB)

SERIES	LINE	BODY	ENGINE	TRANSMISSION
L = LOWLINE	3 = HD DODGE 2WD 2 = Med. Duty DODGE 2WD	03 = CAB CHASSIS WHEEL BASE 3 05 = CAB CHASSIS WHEEL BASE 5 13 = 119 WB 53 = 119 WB 15 = VAN WHEEL BASE 5 55 = WAGON WHEEL BASE 5 17 = VAN WHEEL BASE 7	EG2 = 3.5L V6 Gas Engine EXM = 3.0L V6 Turbo Diesel Engine	DGZ = 5-Speed Auto W5A380 Transmission

AR = use ase required - = Non illustrrated part

<< RETURN TO GROUP INDEX

Fuel Pump & Sending Unit
Figure 14-510

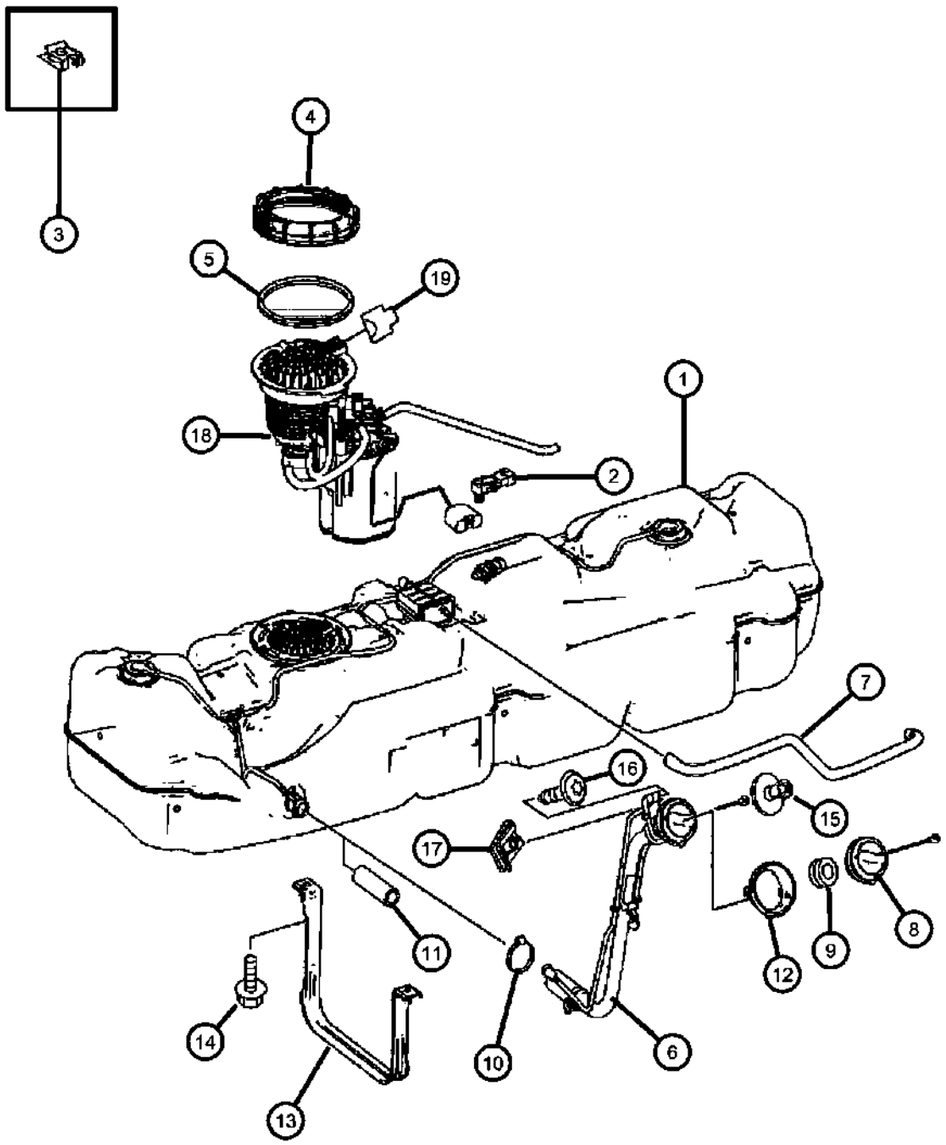

ITEM	PART NUMBER	QTY	LINE	SERIES	BODY	ENGINE	TRANS	TRIM	DESCRIPTION
Note:Fuel Filler Tube For Diesel Model Is Only Serviced With Compete Fuel Tank.									
1	68013485AA	1	2, 3, 6, 7	L		EXM	DGZ		TANK, Fuel
2	68013498AA	1	2, 6	L	13, 15, 17, 53, 55	EG2, EXM	DGZ		SENSOR, Pressure
3	68013488AA	1	2, 3, 6, 7	L		EXM	DGZ		NUT
4	68017088AA	1	2, 3, 6, 7	L		EXM	DGZ		RING, Lock, Fuel Module
5									SEAL
	68017089AA	1	3, 7	L	03, 05	EXM	DGZ		
		1	2, 3, 6, 7	L	13, 15, 17, 53, 55	EXM	DGZ		
6		1							TUBE, Fuel Filler, (NOT SERVICED)
7	68013509AA	1	2, 3, 6, 7	L		EXM	DGZ		HOSE, Vent Line
8	68017092AA	1	2, 3, 6, 7	L		EXM	DGZ		CAP, Fuel Filler
9	05133408AA	1	2, 3, 6, 7	L		EXM	DGZ		GROMMET, Chassis Wiring
10	05133408AA	1							CLAMP, (NOT SERVICED)
11	68013512AA	1	3, 6, 7, 2	L		EXM	DGZ		HOSE, Filler Tube Breather Line
12	68013502AA	1	2, 3, 6, 7	L		EXM	DGZ		SEAL, Fuel Cap
13									STRAP, Fuel Tank
	68013514AA	1	2, 3, 6, 7	L		EG2, EXM	DGZ		Front
	68013515AA	2	2, 3, 6, 7	L		EG2, EXM	DGZ		Rear
14	06104042AA	4	2, 3, 6, 7	L		EG2, EXM	DGZ		SCREW
15									RIVET, Fuel Cap Tether
	05102963AA	1	2, 3, 6, 7	L	13, 15, 17, 53, 55	EG2, EXM	DGZ		
		1	3, 7	L	03, 05	EG2, EXM	DGZ		
16	06104515AA	1	6, 7, 2, 3	L		EG2, EXM	DGZ		SCREW, Fuel Filler Tube Mounting
17	68013488AA	1	2, 3, 6, 7	L		EXM	DGZ		NUT
18									MODULE, Fuel Tank - Diesel
	68013490AA	1	2, 3, 6, 7	L		EXM	DGZ		With [HDB] / Auxiliary Heater
	68013491AA	1	2, 3, 6, 7	L		EXM	DGZ		
19	05135758AA	1	2, 3, 6, 7	L		EG2, EXM	DGZ		CONNECTOR, Female, [4 Pin / M3,5]
-20	05133353AA	AR	2, 3, 6, 7	L		EXM	DGZ		TERMINAL, [0.5 - 1.0 MM2; M3/5]

SPRINTER (VB)

SERIES	LINE	BODY	ENGINE	TRANSMISSION
L = LOWLINE	3 = HD DODGE 2WD 2 = Med. Duty DODGE 2WD	03 = CAB CHASSIS WHEEL BASE 3 05 = CAB CHASSIS WHEEL BASE 5 13 = 119 WB 53 = 119 WB 15 = VAN WHEEL BASE 5 55 = WAGON WHEEL BASE 5 17 = VAN WHEEL BASE 7	EG2 = 3.5L V6 Gas Engine EXM = 3.0L V6 Turbo Diesel Engine	DGZ = 5-Speed Auto W5A380 Transmission

AR = use ase required - = Non illustrrated part

<< RETURN TO GROUP INDEX

Fuel Pump & Sending Unit
Figure 14-520

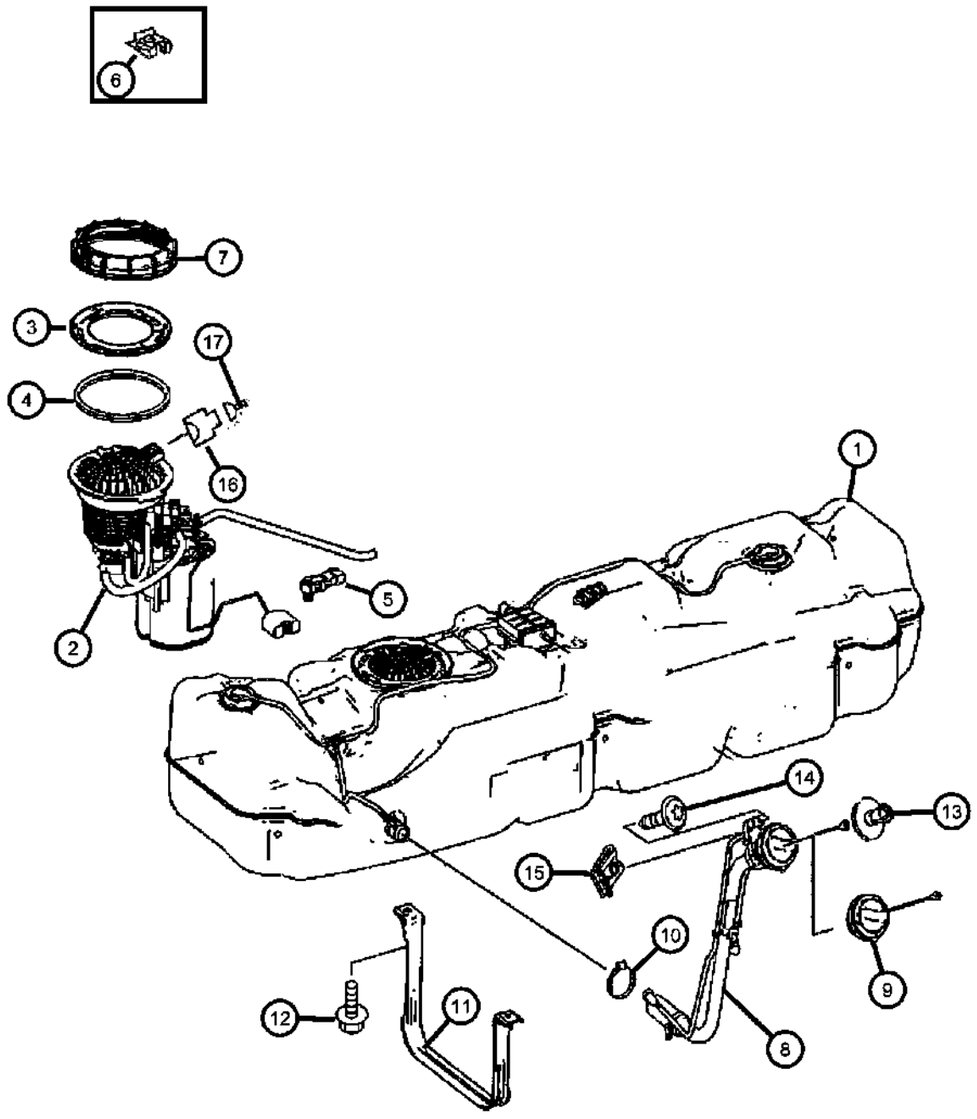

ITEM	PART NUMBER	QTY	LINE	SERIES	BODY	ENGINE	TRANS	TRIM	DESCRIPTION
1	68013486AA	1	2, 3, 6, 7	L		EG2	DGZ		TANK, Fuel
2	68013489AA	1	2, 3, 6, 7	L		EG2	DGZ		MODULE KIT, Fuel Pump/Level Unit
3	68013492AA	1	2, 3, 6, 7	L		EG2	DGZ		RING, Lock, Fuel Module
4	68013493AA	1	2, 3, 6, 7	L		EG2	DGZ		O RING
5	68013498AA	1	2, 3, 6, 7	L		EG2	DGZ		SENSOR, Pressure, [OBD2]
6	68013488AA	1	2, 3, 6, 7	L		EG2			NUT
7									RING, Lock, Fuel Module
	68013492AA	1	2, 6	L	13, 15, 17, 53, 55	EG2	DGZ		
		1	3, 7	L	03, 05	EG2	DGZ		
8	68013499AA	1	2, 3, 6, 7	L		EG2	DGZ		TUBE, Fuel Filler
9	68013500AA	1	2, 3, 6, 7	L		EG2	DGZ		CAP, Fuel Filler
10	05133494AA	1	2, 3, 6, 7	L		EG2	DGZ		CLAMP
11									STRAP, Fuel Tank
	68013515AA	2	2, 3, 6, 7	L		EG2, EXM	DGZ		Front
	68013514AA	1	2, 3, 6, 7	L		EG2, EXM	DGZ		Rear
12	06104042AA	4	2, 3, 6, 7	L		EG2, EXM	DGZ		SCREW
13									RIVET, Fuel Cap Tether
	05102963AA	1	2, 3, 6, 7	L	13, 15, 17, 53, 55	EG2, EXM	DGZ		
		1	3, 7	L	03, 05	EG2, EXM	DGZ		
14	06104515AA	1	2, 3, 6, 7	L		EG2, EXM	DGZ		SCREW, Fuel Filler Tube Mounting
15	68013488AA	1	2, 3, 6, 7	L		EG2			NUT
16	05135758AA	1	2, 3, 6, 7	L		EG2, EXM	DGZ		CONNECTOR, Female
17									TERMINAL
	05103877AA	AR	2, 3, 6, 7	L		EG2	DGZ		[1.5 - 2.5; MM2; M3/5]
	05133353AA	AR	2, 3, 6, 7	L		EG2	DGZ		[0.5 - 1.0 MM2; M3/5]
-18	05103663AA	AR	2, 3, 6, 7	L		EG2	DGZ		GROMMET, [0.25 - 2.5 MM2; M3/5]
-19	05120865AA	1	2, 3, 6, 7	L		EG2, EXM	DGZ		GASKET, Dummy Plug [M3/5]

SPRINTER (VB)

SERIES	LINE	BODY	ENGINE	TRANSMISSION
L = LOWLINE	3 = HD DODGE 2WD 2 = Med. Duty DODGE 2WD	03 = CAB CHASSIS WHEEL BASE 3 05 = CAB CHASSIS WHEEL BASE 5 13 = 119 WB 53 = 119 WB 15 = VAN WHEEL BASE 5 55 = WAGON WHEEL BASE 5 17 = VAN WHEEL BASE 7	EG2 = 3.5L V6 Gas Engine EXM = 3.0L V6 Turbo Diesel Engine	DGZ = 5-Speed Auto W5A380 Transmission

AR = use ase required - = Non illustrrated part

<< RETURN TO GROUP INDEX

High Pressure Pump
Figure 14-610

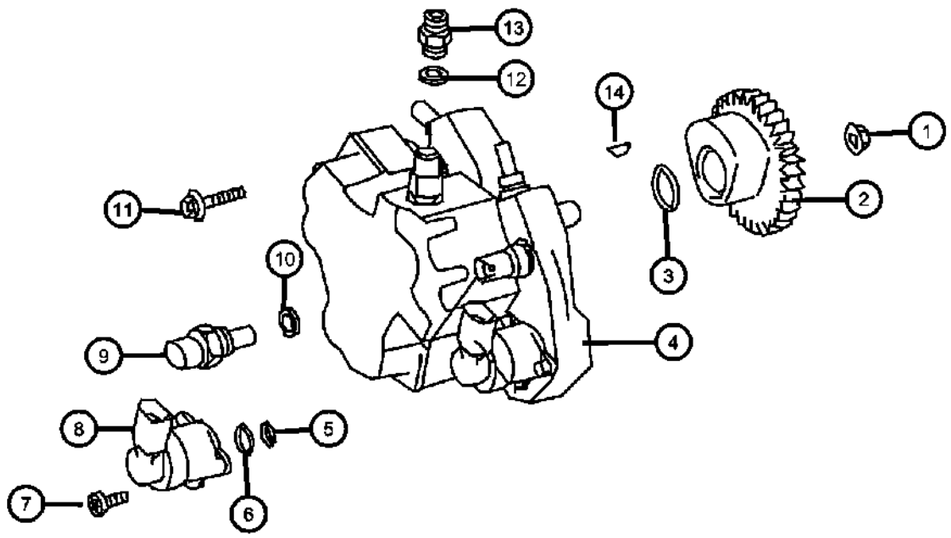

ITEM	PART NUMBER	QTY	LINE	SERIES	BODY	ENGINE	TRANS	TRIM	DESCRIPTION
1	06104719AA	1	2, 3, 6, 7	L		EXM	DGZ		NUT, M14x1.5
2	05175601AA	1	2, 3, 6, 7	L		EXM	DGZ		GEAR, Injection Pump
3	68014061AA	1	2, 3, 6, 7	L		EXM	DGZ		GASKET
4	68014060AA	1	2, 3, 6, 7	L		EXM	DGZ		PUMP
5	05142116AA	1	2, 3, 6, 7	L		EXM	DGZ		GASKET, Injection Pump
6	05142117AA	1	2, 3, 6, 7	L		EXM	DGZ		GASKET, Injection Pump
7	05175770AA	3	2, 3, 6, 7	L		EXM	DGZ		SCREW, Valve to Housing
8	68014062AA	1	2, 3, 6, 7	L		EXM	DGZ		VALVE, Flow Control
9	05103534AA	1	2, 3, 6, 7	L		EXM	DGZ		SENDING UNIT, Temperature Gauge
10	05179226AA	1	2, 3, 6, 7	L		EXM	DGZ		GASKET
11	68014063AA	3	2, 3, 6, 7	L		EXM	DGZ		SCREW, Injection Pump to Cylinder Head
12	05175769AA	1	2, 3, 6, 7	L		EXM	DGZ		O RING
13	05175768AA	1	2, 3, 6, 7	L		EXM	DGZ		CONNECTOR, Fuel Line
14	05175602AA	1	2, 3, 6, 7	L		EXM	DGZ		KEY, Woodruff, Drive Gear to Injection Pump

SPRINTER (VB)

SERIES	LINE	BODY	ENGINE	TRANSMISSION
L = LOWLINE	3 = HD DODGE 2WD 2 = Med. Duty DODGE 2WD	03 = CAB CHASSIS WHEEL BASE 3 05 = CAB CHASSIS WHEEL BASE 5 13 = 119 WB 53 = 119 WB 15 = VAN WHEEL BASE 5 55 = WAGON WHEEL BASE 5 17 = VAN WHEEL BASE 7	EG2 = 3.5L V6 Gas Engine EXM = 3.0L V6 Turbo Diesel Engine	DGZ = 5-Speed Auto W5A380 Transmission

Turbocharger
Figure 14-620

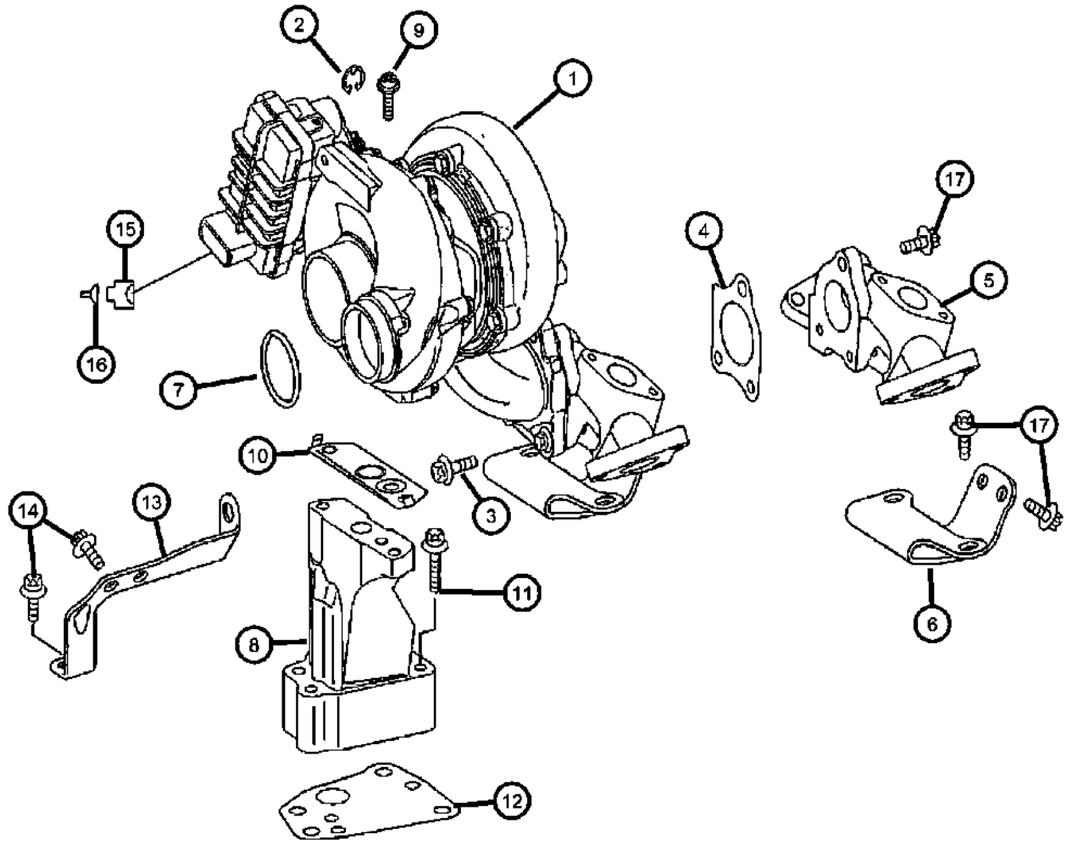

ITEM	PART NUMBER	QTY	LINE	SERIES	BODY	ENGINE	TRANS	TRIM	DESCRIPTION
1	68004666AA	1	2, 6, 7, 3	L		EXM	DGZ		TURBOCHARGER
2	05183127AA	2	2, 3, 6, 7	L		EXM	DGZ		RETAINING RING
3	05073720AB	3	2, 3, 6, 7	L		EXM	DGZ		BOLT, Turbocharger To Exhaust Manafold
4	05175629AA	1	2, 3, 6, 7	L		EXM	DGZ		GASKET, Turbocharger, Turbocharger To Support
5	68004669AA	1	2, 3, 6, 7	L		EXM	DGZ		MANIFOLD, Collector Pipe
6	68012295AA	1	2, 3, 6, 7	L		EXM	DGZ		BRACKET
7	05175626AA	1	2, 3, 6, 7	L		EXM	DGZ		O RING
8	05175627AA	1	2, 3, 6, 7	L		EXM	DGZ		BRACKET, Turbo Charger
9	05073710AA	2	2, 3, 6, 7	L		EXM	DGZ		SCREW
10	05175630AA	1	2, 3, 6, 7	L		EXM	DGZ		GASKET, Turbocharger
11	05133207AA	4	2, 3, 6, 7	L		EXM	DGZ		BOLT, [M8x55]
12	05175632AA	1	2, 3, 6, 7	L		EXM	DGZ		GASKET, Turbocharger
13	68012302AA	1	2, 3, 6, 7	L		EXM	DGZ		BRACKET
14	06104005AA	4	2, 3, 6, 7	L		EXM	DGZ		BOLT, 6 Lobe External Head, M6X1.00X16.00, [M6x16]
15	05120780AA	1	2, 3, 6, 7	L		EG2, EXM	DGZ		CONNECTOR, [5 Pin: Y77] [VNR] Actuator Connector
16	05133353AA	AR	2, 3, 6, 7	L		EXM	DGZ		TERMINAL
17	05073720AB	3	2, 3, 6, 7	L		EXM	DGZ		BOLT

SPRINTER (VB)

SERIES	LINE	BODY	ENGINE	TRANSMISSION
L = LOWLINE	3 = HD DODGE 2WD 2 = Med. Duty DODGE 2WD	03 = CAB CHASSIS WHEEL BASE 3 05 = CAB CHASSIS WHEEL BASE 5 13 = 119 WB 53 = 119 WB 15 = VAN WHEEL BASE 5 55 = WAGON WHEEL BASE 5 17 = VAN WHEEL BASE 7	EG2 = 3.5L V6 Gas Engine EXM = 3.0L V6 Turbo Diesel Engine	DGZ = 5-Speed Auto W5A380 Transmission

Air Cleaner
Figure 14-810

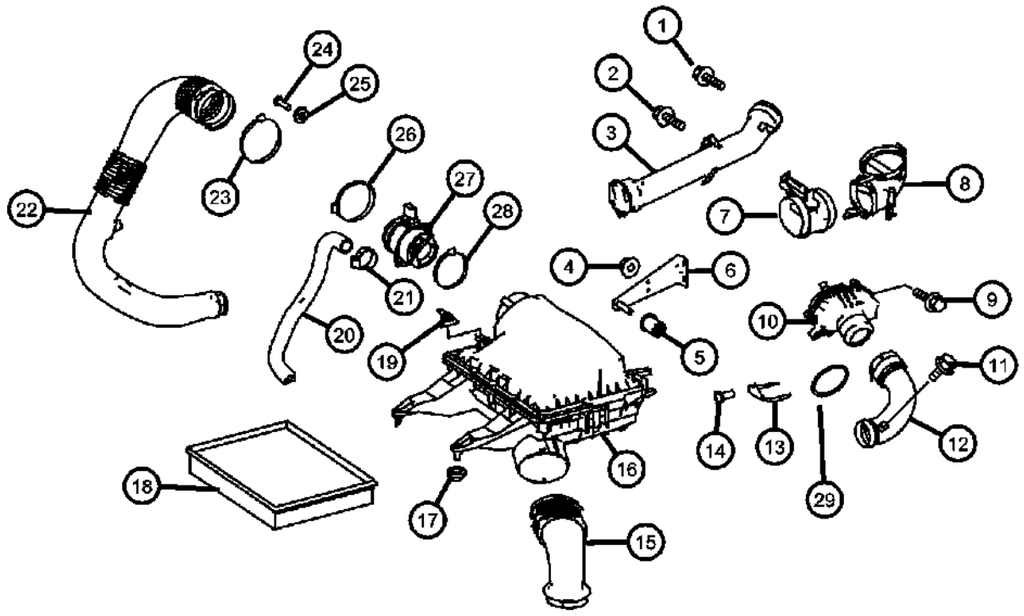

ITEM	PART NUMBER	QTY	LINE	SERIES	BODY	ENGINE	TRANS	TRIM	DESCRIPTION
1									BOLT
	06104005AA	1	3, 7	L	03, 05	EXM	DGZ		M6x16
		1	2, 3, 6, 7	L	13, 15, 17, 53, 55	EXM	DGZ		M6x16
2									SCREW, Hex Flange Head
	06104121AA	2	3, 7	L	03, 05	EG2, EXM	DGZ		M6x10
		2	2, 3, 6, 7	L	15, 17, 53, 55, 13	EG2, EXM	DGZ		M6x10
3	68012331AA	1	2, 3, 6, 7	L		EXM	DGZ		HOSE, Air Cleaner
4									NUT
	68004878AA	4	3, 7	L	03, 05	EG2, EXM	DGZ		Bracket to Firewall M6
		4	2, 3, 6, 7	L	13, 15, 17, 53, 55	EG2, EXM	DGZ		Bracket to Firewall M6
5	68013677AA	2	2, 3, 6, 7	L		EG2, EXM	DGZ		GROMMET
6	68013680AA	2	2, 3, 6, 7	L		EG2, EXM	DGZ		BRACKET, Air Cleaner
7	68011734AA	1	2, 3, 6, 7	L		EG2	DGZ		SENSOR, Mass Airflow
8	68011736AA	1	2, 3, 6, 7	L		EG2	DGZ		HOUSING, Air Duct
9									BOLT
	06104005AA	3	3, 7	L	03, 05	EXM	DGZ		Intake Muffler to Oil Filter M6x16
		3	2, 3, 6, 7	L	13, 15, 17, 53, 55	EXM	DGZ		Intake Muffler to Oil Filter M6x16
10	68012338AA	1	2, 3, 6, 7	L		EXM	DGZ		RESONATOR, Turbo
11	06104005AA	1	2, 3, 6, 7	L		EXM	DGZ		BOLT, Charging Air Line to Bracket M6x16
12	68012330AA	1	2, 3, 6, 7	L		EXM	DGZ		HOSE, Charge Air
13									BRACKET
	68012339AA	1	3, 7	L	03, 05	EXM	DGZ		Muffler to Charge Air Manifold
		1	2, 3, 6, 7	L	53, 55, 13, 15, 17	EXM	DGZ		Muffler to Charge Air Manifold
14									SCREW
	06104633AA	1	3, 7	L	03, 05	EXM	DGZ		Noise Silencer to Bracket 5x12
		1	2, 3, 6, 7	L	13, 15, 17, 53, 55	EXM	DGZ		Noise Silencer to Bracket 5x12
15	68013681AA	1	2, 3, 6, 7	L		EG2, EXM	DGZ		HOSE, Air Cleaner
16									AIR CLEANER
	68013675AA	1	2, 3, 6, 7	L		EG2	DGZ		

SPRINTER (VB)

SERIES	LINE	BODY	ENGINE	TRANSMISSION
L = LOWLINE	3 = HD DODGE 2WD 2 = Med. Duty DODGE 2WD	03 = CAB CHASSIS WHEEL BASE 3 05 = CAB CHASSIS WHEEL BASE 5 13 = 119 WB 53 = 119 WB 15 = VAN WHEEL BASE 5 55 = WAGON WHEEL BASE 5 17 = VAN WHEEL BASE 7	EG2 = 3.5L V6 Gas Engine EXM = 3.0L V6 Turbo Diesel Engine	DGZ = 5-Speed Auto W5A380 Transmission

Air Cleaner
Figure 14-810

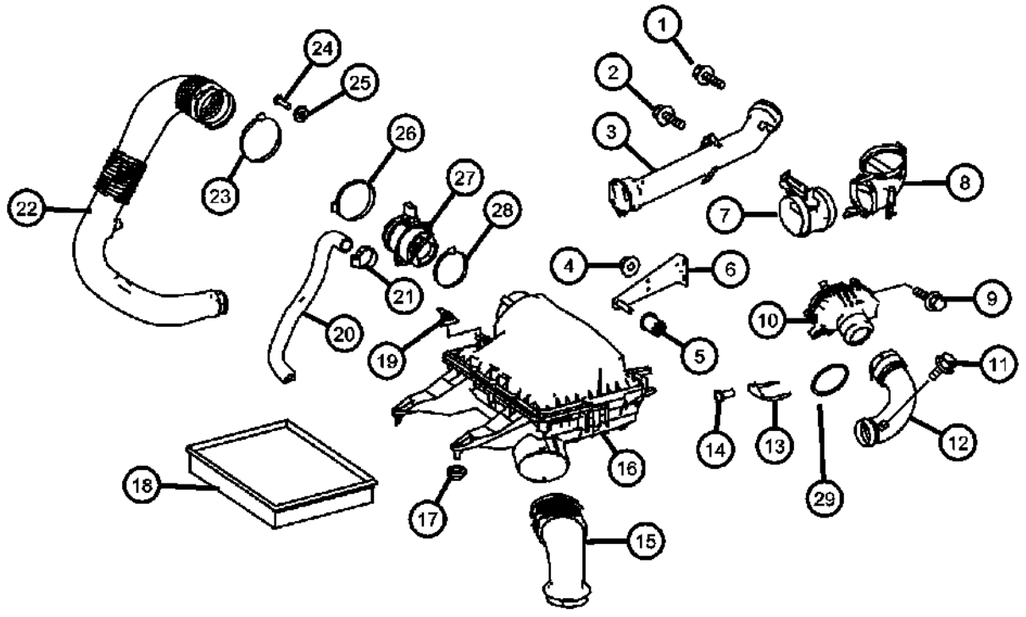

ITEM	PART NUMBER	QTY	LINE	SERIES	BODY	ENGINE	TRANS	TRIM	DESCRIPTION
	68017656AA	1	2, 3, 6, 7	L		EXM	DGZ		
17	05099283AA	2	2, 3, 6, 7	L		EG2, EXM	DGZ		GROMMET, Air Cleaner to Frame
18	68013676AA	1	2, 3, 6, 7	L		EG2, EXM	DGZ		FILTER, Air
19									SENSOR, Air Pressure
	05101120AB	1	2, 3, 6, 7	L		EG2	DGZ		
		1	2, 3, 6, 7	L		EXM	DGZ		
20	68013679AA	1	2, 3, 6, 7	L		EG2	DGZ		HOSE, Secondary Air Pump to Air Filter
21	06104783AA	1	2, 3, 6, 7	L		EG2	DGZ		CLAMP, Hose
22									HOSE, Air Cleaner
	68013682AA	1	2, 3, 6, 7	L		EXM	DGZ		
	68013683AA	1	2, 3, 6, 7	L		EG2	DGZ		
23	06104790AA	1	2, 3, 6, 7	L		EG2	DGZ		CLAMP, Clean Air Line to Mass Air Flow Sensor 80-100MM
24									SCREW
	06104635AA	2	3, 7	L	03, 05	EG2, EXM	DGZ		Mass Air Flow Sensor to Filter 5x20
		2	2, 3, 6, 7	L	13, 15, 17, 53, 55	EG2, EXM	DGZ		Mass Air Flow Sensor to Filter 5x20
25	68013678AA	2	2, 3, 6, 7	L		EG2	DGZ		WASHER
26	68013678AA	2							CLAMP, (NOT SERVICED)
27	68017661AA	1	2, 3, 6, 7	L		EXM	DGZ		SENSOR, Mass Airflow
28	06104788AA	1	2, 3, 6, 7	L		EXM	DGZ		CLAMP, Hose, Clean Air Duct 60-80MM
29	68020380AA	1	2, 3, 6, 7	L		EXM	DGZ		GASKET, Air Inlet

SPRINTER (VB)

SERIES	LINE	BODY	ENGINE	TRANSMISSION
L = LOWLINE	3 = HD DODGE 2WD 2 = Med. Duty DODGE 2WD	03 = CAB CHASSIS WHEEL BASE 3 05 = CAB CHASSIS WHEEL BASE 5 13 = 119 WB 53 = 119 WB 15 = VAN WHEEL BASE 5 55 = WAGON WHEEL BASE 5 17 = VAN WHEEL BASE 7	EG2 = 3.5L V6 Gas Engine EXM = 3.0L V6 Turbo Diesel Engine	DGZ = 5-Speed Auto W5A380 Transmission

AR = use ase required - = Non illustrrated part

<< RETURN TO GROUP INDEX

Accelerator Pedal
Figure 14-1110

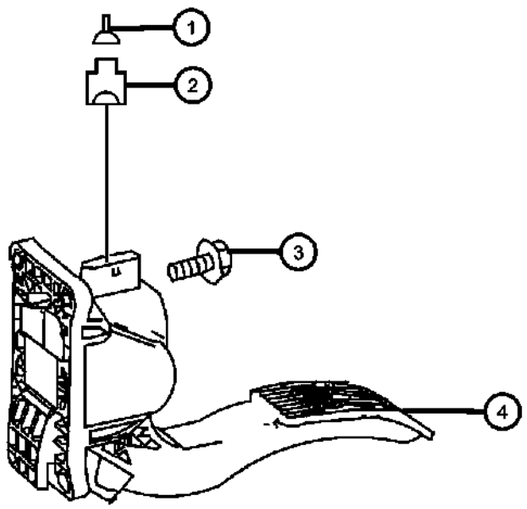

ITEM	PART NUMBER	QTY	LINE	SERIES	BODY	ENGINE	TRANS	TRIM	DESCRIPTION
1	68011050AA	AR	2, 3, 6, 7	L		EG2	DGZ		GASKET, Yellow B37/3
2	68011246AA	1	2, 3, 6, 7	L		EG2, EXM	DGZ		CONNECTOR, Accelerator Module [6-Pol;B37/3]
3	06104006AA	3	2, 3, 6, 7	L		EXM	DGZ		BOLT, Accelerator Pedal to Bracket M6x20
4	68013463AA	1	2, 3, 6, 7	L		EXM, EG2	DGZ		PEDAL, Accelerator

SPRINTER (VB)

SERIES	LINE	BODY	ENGINE	TRANSMISSION
L = LOWLINE	3 = HD DODGE 2WD 2 = Med. Duty DODGE 2WD	03 = CAB CHASSIS WHEEL BASE 3 05 = CAB CHASSIS WHEEL BASE 5 13 = 119 WB 53 = 119 WB 15 = VAN WHEEL BASE 5 55 = WAGON WHEEL BASE 5 17 = VAN WHEEL BASE 7	EG2 = 3.5L V6 Gas Engine EXM = 3.0L V6 Turbo Diesel Engine	DGZ = 5-Speed Auto W5A380 Transmission

Group - 16

Propeller Shafts and U-Joints

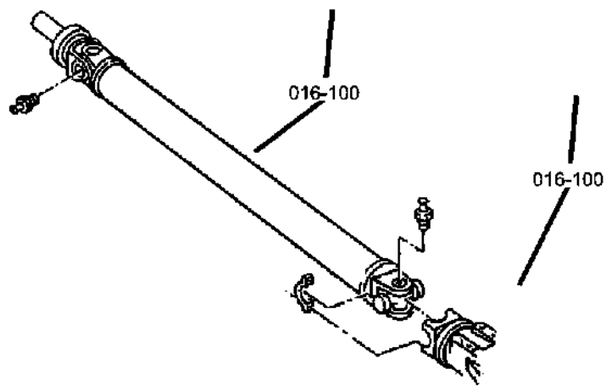

016-100 Propeller Shaft 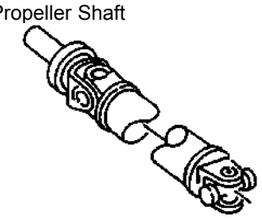			

Group - 16 Propeller Shafts and U-Joints

Illustration Title — Group-Fig. No.

Propeller Shaft

Driveshaft / [2500 & 3500] Series ..... Fig. 16 - 110
Driveshaft / [2500 & 3500] Series ..... Fig. 16 - 120
Driveshaft / [2500 & 3500] Series ..... Fig. 16 - 130
Driveshaft / [2500] Series ..... Fig. 16 - 140
Driveshaft / [3500] Series ..... Fig. 16 - 150

Driveshaft / [2500 & 3500] Series
Figure 16-110

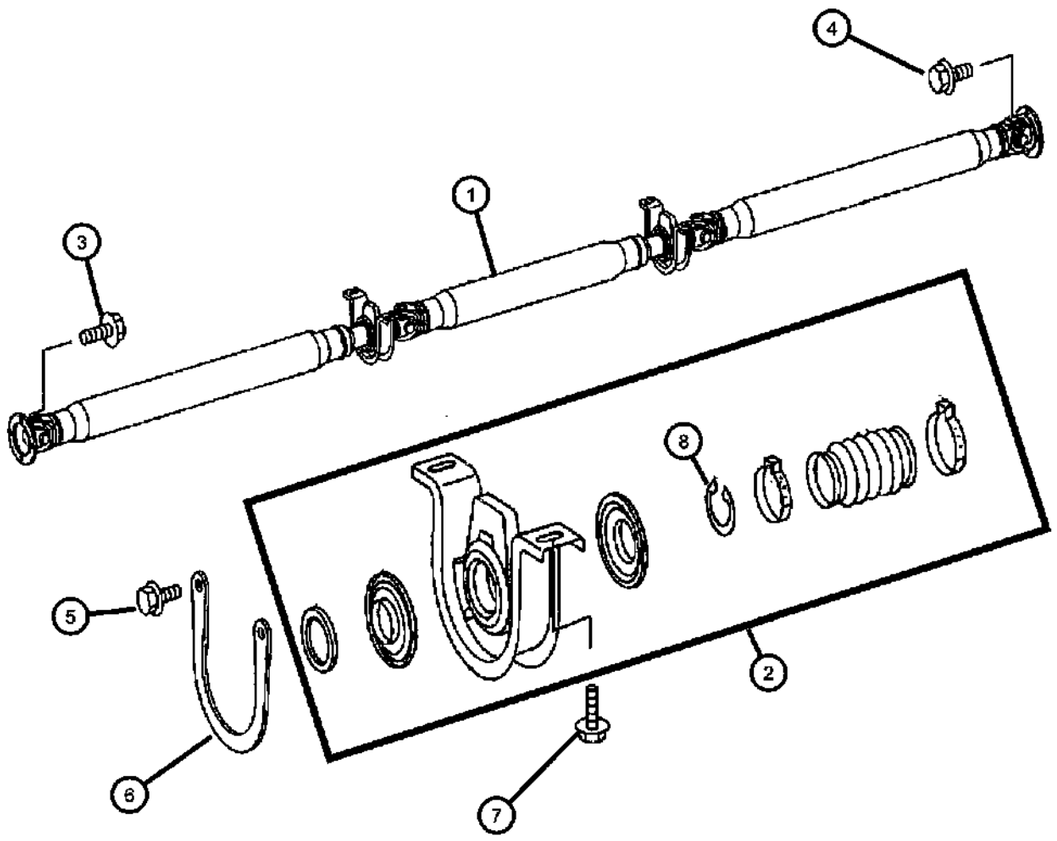

ITEM	PART NUMBER	QTY	LINE	SERIES	BODY	ENGINE	TRANS	TRIM	DESCRIPTION
1	68006632AA	1	2, 3, 6, 7	L	03, 13, 53	EG2	DGZ		SHAFT, Drive, [3] Piece Drive Shaft
2	68006649AA	1	2, 3, 6, 7	L		EG2, EXM	DGZ		CENTER BEARING, Drive Shaft
3	68017251AA	4	2, 3, 6, 7	L		EG2, EXM	DGZ		BOLT, Drive Shaft To Transmission
4	68017251AA	4	2, 3, 6, 7	L		EG2, EXM	DGZ		BOLT, Drive Shaft To Rear Axle
5	06507218AB	4	2, 3, 6, 7	L	13, 15, 17, 53, 55	EG2, EXM	DGZ		SCREW, [M8x12]
6	68006655AA	2	2, 3, 6, 7	L		EG2, EXM	DGZ		STRAP, Prop Shaft
7	06104235AA	4	2, 3, 6, 7	L		EG2, EXM	DGZ		BOLT, [M12x1.5x35-10.9]
8	68006651AA	1	2, 3, 6, 7	L		EG2, EXM	DGZ		RING, Lock Ring

SPRINTER (VB)

SERIES	LINE	BODY	ENGINE	TRANSMISSION
L = LOWLINE	3 = HD DODGE 2WD 2 = Med. Duty DODGE 2WD	03 = CAB CHASSIS WHEEL BASE 3 05 = CAB CHASSIS WHEEL BASE 5 13 = 119 WB 53 = 119 WB 15 = VAN WHEEL BASE 5 55 = WAGON WHEEL BASE 5 17 = VAN WHEEL BASE 7	EG2 = 3.5L V6 Gas Engine EXM = 3.0L V6 Turbo Diesel Engine	DGZ = 5-Speed Auto W5A380 Transmission

Driveshaft / [2500 & 3500] Series
Figure 16-120

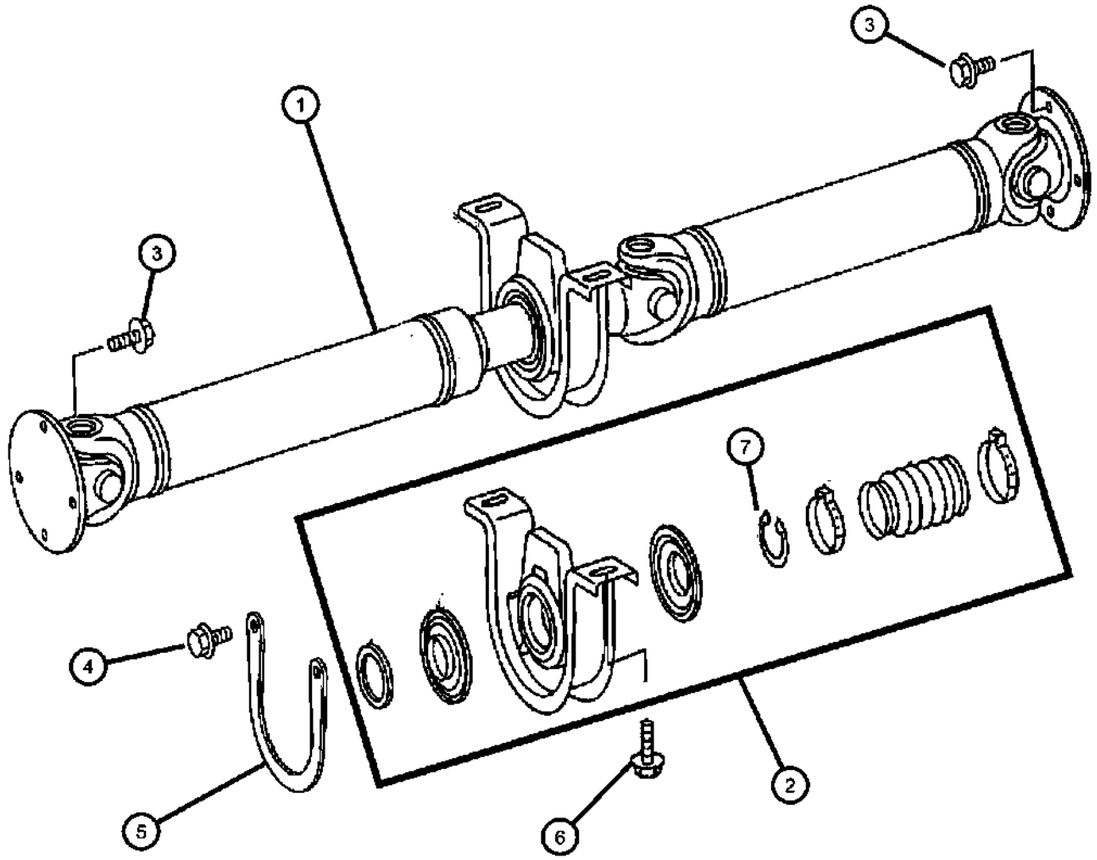

ITEM	PART NUMBER	QTY	LINE	SERIES	BODY	ENGINE	TRANS	TRIM	DESCRIPTION
1	68006622AA	1	2, 3, 6, 7	L	03, 13, 53	EXM	DGZ		SHAFT, Drive
2	68006649AA	1	2, 3, 6, 7	L		EXM, EG2	DGZ		CENTER BEARING, Drive Shaft
3	68017251AA	4	2, 3, 6, 7	L		EG2, EXM	DGZ		BOLT, Driveshaft To Transmission
4	06507218AB	4	2, 3, 6, 7	L	13, 15, 17, 53, 55	EG2, EXM	DGZ		SCREW, [M8x12]
5	68006655AA	2	2, 3, 6, 7	L		EG2, EXM	DGZ		STRAP, Prop Shaft
6	06104235AA	4	2, 3, 6, 7	L		EG2, EXM	DGZ		BOLT, [M12x1.5x35-10.9]
7	68006651AA	1	2, 3, 6, 7	L		EG2, EXM	DGZ		RING

SPRINTER (VB)

SERIES	LINE	BODY	ENGINE	TRANSMISSION
L = LOWLINE	3 = HD DODGE 2WD 2 = Med. Duty DODGE 2WD	03 = CAB CHASSIS WHEEL BASE 3 05 = CAB CHASSIS WHEEL BASE 5 13 = 119 WB 53 = 119 WB 15 = VAN WHEEL BASE 5 55 = WAGON WHEEL BASE 5 17 = VAN WHEEL BASE 7	EG2 = 3.5L V6 Gas Engine EXM = 3.0L V6 Turbo Diesel Engine	DGZ = 5-Speed Auto W5A380 Transmission

Driveshaft / [2500 & 3500] Series
Figure 16-130

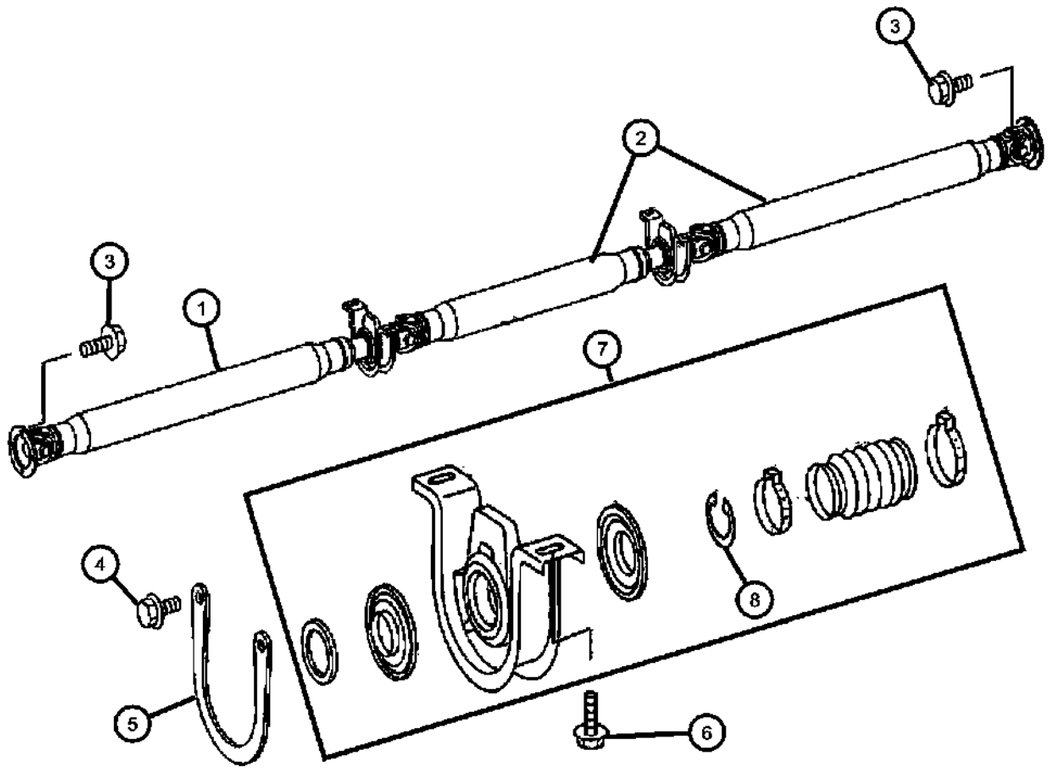

ITEM	PART NUMBER	QTY	LINE	SERIES	BODY	ENGINE	TRANS	TRIM	DESCRIPTION
1	68006641AA	1	2, 3, 6, 7	L	05, 15, 17, 55	EG2	DGZ		SHAFT, DriveFront
2	68006638AA	1	2, 3, 6, 7	L	05, 15, 17, 55	EG2	DGZ		SHAFT, DriveRear
3	68017251AA	4	2, 3, 6, 7	L		EG2, EXM	DGZ		BOLT, Driveshaft To Transmission / Driveshaft To Rear Axle
4	06507218AB	4	2, 3, 6, 7	L	13, 15, 17, 53, 55	EG2, EXM	DGZ		SCREW, [M8x12] Rebound Strap To Substructure
5	68006655AA	2	2, 3, 6, 7	L		EG2, EXM	DGZ		STRAP, Prop Shaft, Rebound Strap
6	06104235AA	4	2, 3, 6, 7	L		EG2, EXM	DGZ		BOLT, [M12x1.5x35-10.9]
7									CENTER BEARING, Drive Shaft
	68006649AA	1	2, 3, 6, 7	L		EG2, EXM	DGZ		Front
	68031836AA	1	2, 3, 6, 7	L	05, 15, 17, 55	EG2	DGZ		Rear
8	68006651AA	1	2, 3, 6, 7	L		EG2, EXM	DGZ		RING

SPRINTER (VB)

SERIES	LINE	BODY	ENGINE	TRANSMISSION
L = LOWLINE	3 = HD DODGE 2WD 2 = Med. Duty DODGE 2WD	03 = CAB CHASSIS WHEEL BASE 3 05 = CAB CHASSIS WHEEL BASE 5 13 = 119 WB 53 = 119 WB 15 = VAN WHEEL BASE 5 55 = WAGON WHEEL BASE 5 17 = VAN WHEEL BASE 7	EG2 = 3.5L V6 Gas Engine EXM = 3.0L V6 Turbo Diesel Engine	DGZ = 5-Speed Auto W5A380 Transmission

Driveshaft / [2500] Series
Figure 16-140

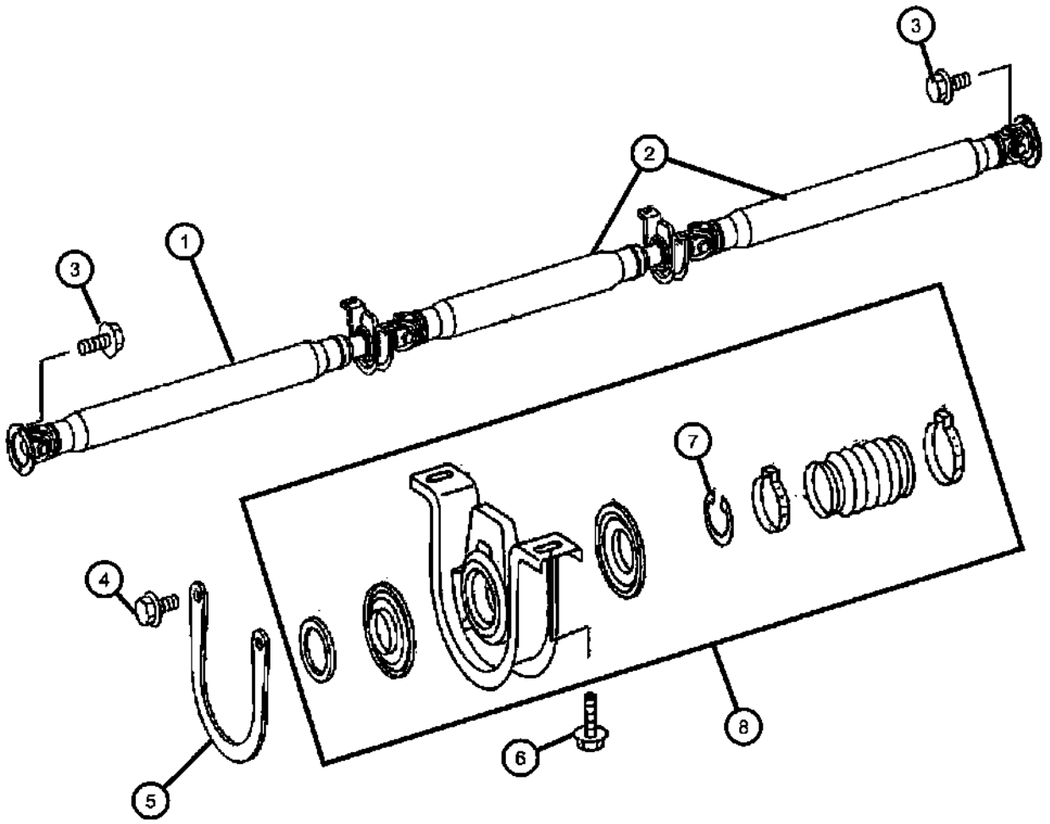

ITEM	PART NUMBER	QTY	LINE	SERIES	BODY	ENGINE	TRANS	TRIM	DESCRIPTION
1	68006640AA	1	2, 3, 6, 7	L	05, 15, 17, 55	EXM	DGZ		SHAFT, DriveFront
2	68006638AA	1	2, 6	L	15, 17, 55	EXM	DGZ		SHAFT, DriveRear
3	68017251AA	4	2, 3, 6, 7	L		EG2, EXM	DGZ		BOLT, Driveshaft To Transmission / Driveshaft To Rear Axle
4	06507218AB	4	2, 3, 6, 7	L	13, 15, 17, 53, 55	EG2, EXM	DGZ		SCREW, [M8x12] / Rebound Strap To Substructure
5	68006655AA	2	2, 3, 6, 7	L		EG2, EXM	DGZ		STRAP, Prop Shaft, Rebound Strap
6	06104235AA	4	2, 3, 6, 7	L		EG2, EXM	DGZ		BOLT, [M12x1.5x35 - 10.9] / Bearing To Substructure
7	68006651AA	1	2, 3, 6, 7	L		EG2, EXM	DGZ		RING
8									CENTER BEARING, Drive Shaft
	68006649AA	1	2, 3, 6, 7	L		EG2, EXM	DGZ		Front
	68031836AA	1	2, 6	L	15, 17, 55	EXM	DGZ		Rear

SPRINTER (VB)

SERIES	LINE	BODY	ENGINE	TRANSMISSION
L = LOWLINE	3 = HD DODGE 2WD 2 = Med. Duty DODGE 2WD	03 = CAB CHASSIS WHEEL BASE 3 05 = CAB CHASSIS WHEEL BASE 5 13 = 119 WB 53 = 119 WB 15 = VAN WHEEL BASE 5 55 = WAGON WHEEL BASE 5 17 = VAN WHEEL BASE 7	EG2 = 3.5L V6 Gas Engine EXM = 3.0L V6 Turbo Diesel Engine	DGZ = 5-Speed Auto W5A380 Transmission

Driveshaft / [3500] Series
Figure 16-150

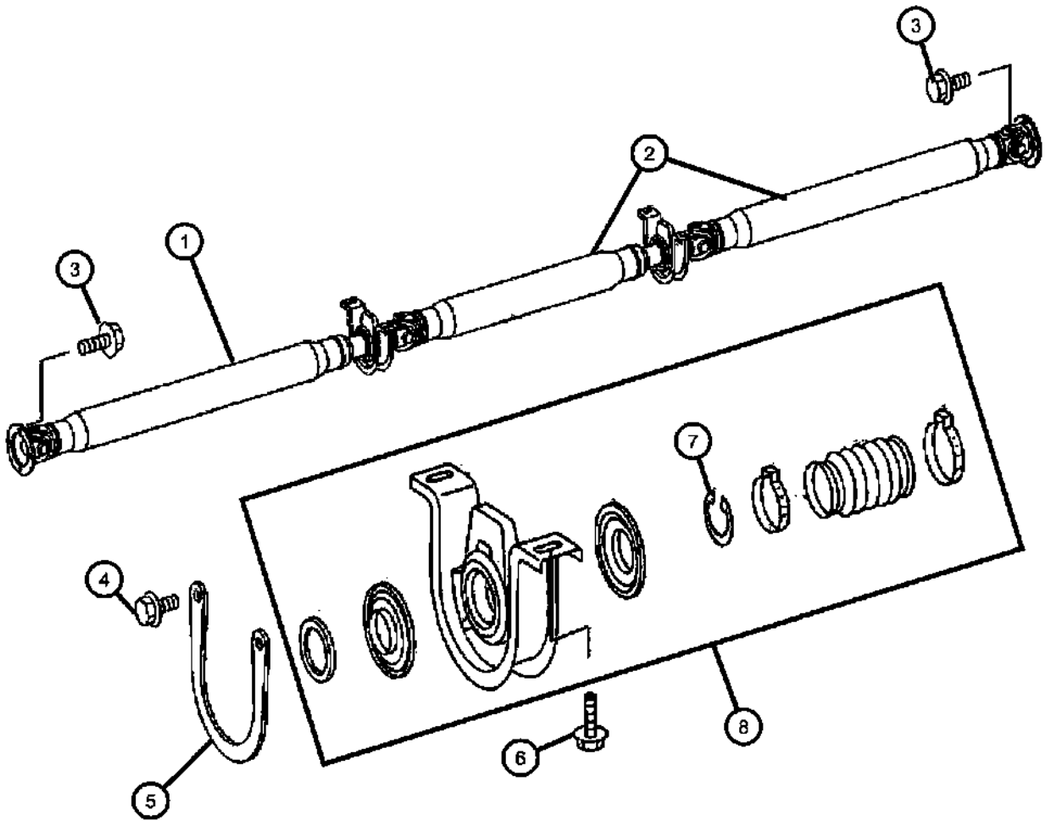

ITEM	PART NUMBER	QTY	LINE	SERIES	BODY	ENGINE	TRANS	TRIM	DESCRIPTION
1	68006640AA	1	2, 3, 6, 7	L	05, 15, 17, 55	EXM	DGZ		SHAFT, DriveFront
2	68006637AA	1	3, 7	L	05, 15, 17	EXM	DGZ		SHAFT, DriveRear
3	68017251AA	4	2, 3, 6, 7	L		EG2, EXM	DGZ		BOLT, Driveshaft To Transmission / Driveshaft To Rear Axle
4	06507218AB	4	2, 3, 6, 7	L	13, 15, 17, 53, 55	EG2, EXM	DGZ		SCREW, [M8x12] / Rebound Strap To Substructure
5	68006655AA	2	2, 3, 6, 7	L		EG2, EXM	DGZ		STRAP, Prop Shaft, Rebound Strap
6	06104235AA	4	2, 3, 6, 7	L		EG2, EXM	DGZ		BOLT, [M12x1.5x35 - 10.9] / Bearing To Substructure
7	68006651AA	1	2, 3, 6, 7	L		EXM, EG2	DGZ		RING
8	68006649AA	1	2, 3, 6, 7	L		EG2, EXM	DGZ		CENTER BEARING, Drive ShaftFront

SPRINTER (VB)

SERIES	LINE	BODY	ENGINE	TRANSMISSION
L = LOWLINE	3 = HD DODGE 2WD 2 = Med. Duty DODGE 2WD	03 = CAB CHASSIS WHEEL BASE 3 05 = CAB CHASSIS WHEEL BASE 5 13 = 119 WB 53 = 119 WB 15 = VAN WHEEL BASE 5 55 = WAGON WHEEL BASE 5 17 = VAN WHEEL BASE 7	EG2 = 3.5L V6 Gas Engine EXM = 3.0L V6 Turbo Diesel Engine	DGZ = 5-Speed Auto W5A380 Transmission

Group - 17

Rear Suspension

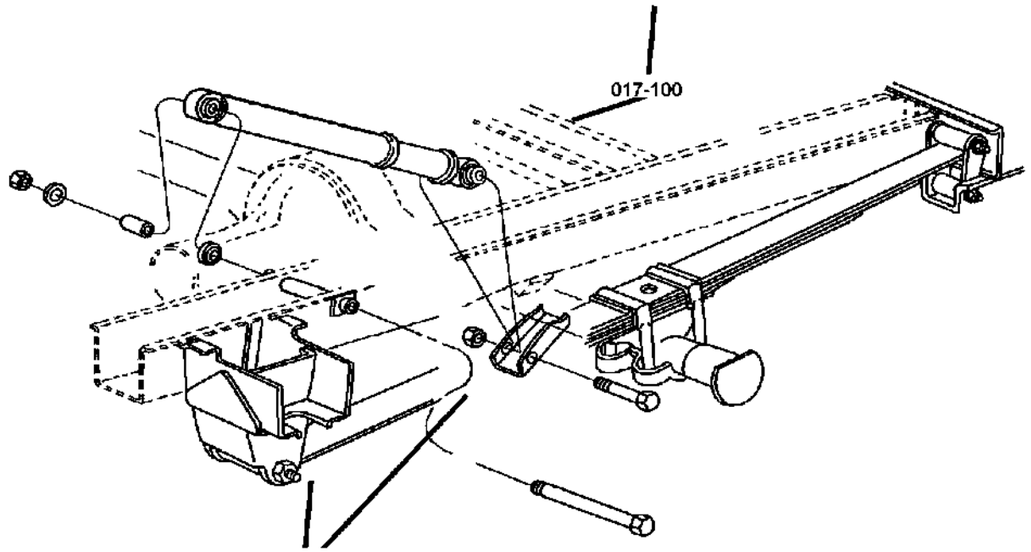

017-100

017-100 Rear Suspension 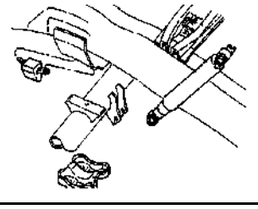	**017-200** Rear Stabilizer 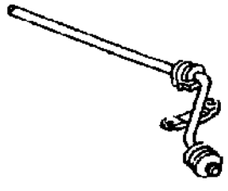		

Group - 17 Rear Suspension

Illustration Title — Group-Fig. No.

Rear Suspension
Rear Springs.....Fig. 17 - 110

Rear Stabilizer
Rear Shocks & Stabilizer Bar .....Fig. 17 - 210
Rear Shocks & Stabilizer Bar .....Fig. 17 - 220

Rear Springs
Figure 17-110

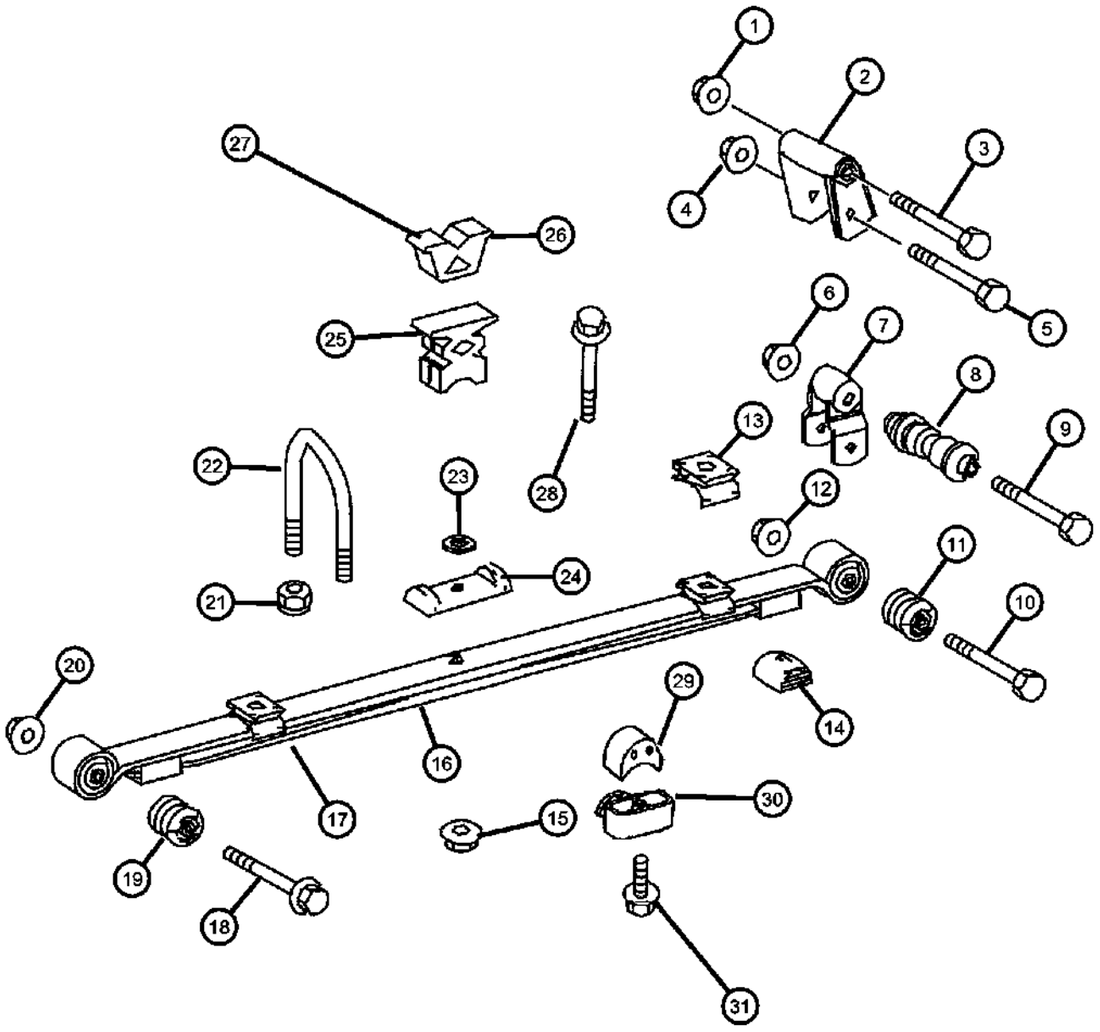

ITEM	PART NUMBER	QTY	LINE	SERIES	BODY	ENGINE	TRANS	TRIM	DESCRIPTION
Note:Rear Leaf Spring Bushing Only Serviced For [3500] Series Sprinter. For [2500] Must Order Rear Leaf Spring									
1									NUT
	06105171AA	2	3, 7	L	03, 05	EG2, EXM	DGZ		M12x1.5
		2	2, 3, 6, 7	L	13, 15, 17, 53, 55	EG2, EXM	DGZ		M12x1.5
2	68013793AA	2	2, 3, 6, 7	L		EG2, EXM	DGZ		SHACKLE, Spring
3									BOLT
	05118734AA	2	2, 6	L	13, 15, 17, 53, 55	EG2	DGZ		
	06104285AA	2	3, 7	L		EG2, EXM	DGZ		
4									NUT
	06105171AA	2	3, 7	L	03, 05	EG2, EXM	DGZ		M12x1.5
		2	2, 3, 6, 7	L	13, 15, 17, 53, 55	EG2, EXM	DGZ		M12x1.5
5									BOLT
	05125718AA	2	3, 7	L	03, 05	EG2, EXM	DGZ		Spring Shackle
		2	2, 6	L	13, 15, 17, 53, 55	EG2	DGZ		Spring Shackle
6									NUT
	06105170AA	2	3, 7	L	03, 05	EG2, EXM	DGZ		M12x1.5
		2	3, 7	L	13, 15, 17, 53, 55	EXM	DGZ		M12x1.5
7									SHACKLE, Spring
	05118655AA	2	3, 7	L	03, 05	EG2, EXM	DGZ		
		2	3, 7	L	13, 15, 17, 53, 55	EXM	DGZ		
8									BUSHING, Spring
	05118729AA	2	3, 7	L	03, 05	EG2, EXM	DGZ		
		2	3, 7	L	13, 15, 17, 53, 55	EXM	DGZ		
9									BOLT
	05118734AA	2	2, 6	L	13, 15, 17, 53, 55	EG2	DGZ		
	06104285AA	2	3, 7	L		EG2, EXM	DGZ		
10									BOLT
	05125718AA	2	3, 7	L	03, 05	EG2, EXM	DGZ		

SPRINTER (VB)

SERIES	LINE	BODY	ENGINE	TRANSMISSION
L = LOWLINE	3 = HD DODGE 2WD 2 = Med. Duty DODGE 2WD	03 = CAB CHASSIS WHEEL BASE 3 05 = CAB CHASSIS WHEEL BASE 5 13 = 119 WB 53 = 119 WB 15 = VAN WHEEL BASE 5 55 = WAGON WHEEL BASE 5 17 = VAN WHEEL BASE 7	EG2 = 3.5L V6 Gas Engine EXM = 3.0L V6 Turbo Diesel Engine	DGZ = 5-Speed Auto W5A380 Transmission

Rear Springs
Figure 17-110

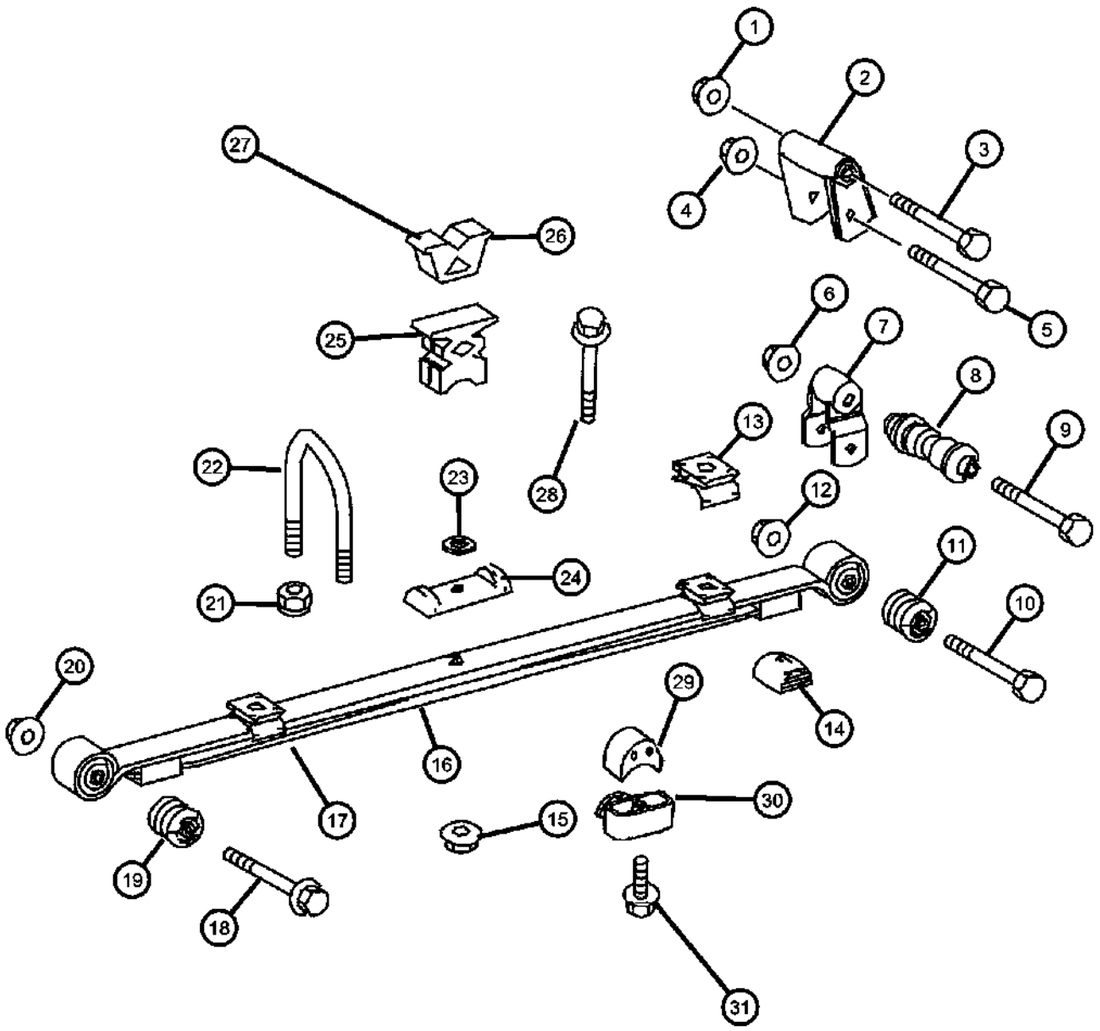

ITEM	PART NUMBER	QTY	LINE	SERIES	BODY	ENGINE	TRANS	TRIM	DESCRIPTION
		2	2, 6	L	13, 15, 17, 53, 55	EG2	DGZ		
11									BUSHING, Spring
	05118703AA	2	3, 7	L	03, 05	EG2, EXM	DGZ		Only For [3500] Series / See Note
		2	3, 7	L	13, 15, 17, 53, 55	EXM	DGZ		Only For [3500] Series / See Note
12									NUT
	06105171AA	2	3, 7	L	03, 05	EG2, EXM	DGZ		M12x1.5
		2	2, 3, 6, 7	L	13, 15, 17, 53, 55	EG2, EXM	DGZ		M12x1.5
13									RETAINER, Spring
	68017217AA	4	3, 7	L	03, 05	EG2, EXM	DGZ		With [3AT + XCB]
	68017218AA	4	2, 6	L	13, 15, 17, 53, 55	EG2, EXM	DGZ		With [3B4 + XCB]
		4	2, 6	L	13, 15, 17, 53, 55	EG2, EXM	DGZ		With [XCB]
14									BUMPER, Jounce
	68013790AA	4	2, 6	L	53, 55	EG2, EXM	DGZ		
	68013791AA	4	3, 7	L	03, 05, 13, 15, 17	EG2, EXM	DGZ		
15									NUT
	06105170AA	2	3, 7	L	03, 05	EG2, EXM	DGZ		M10
		2	2, 3, 6, 7	L	13, 15, 17, 53, 55	EG2, EXM	DGZ		M10
16									SPRING, Rear
	68013785AA	2	3, 7	L	03, 05	EG2, EXM	DGZ		With [Z2C]
		2	7, 3	L	13, 15, 17	EXM	DGZ		With [Z2C And / Or Z2B]
	68013786AA	2	3, 7	L	03, 05, 13, 15, 17	EG2, EXM	DGZ		With [SNB]
	68013788AA	2	3, 7	L	03, 05, 13, 15, 17	EG2, EXM	DGZ		With [Z2D]
	68013829AA	2	2, 6	L	53, 55	EG2, EXM	DGZ		With [3B4]
	68020668AA	2	3, 7	L	03, 05	EG2, EXM	DGZ		With [XZB]
	68013784AA	2	2, 6	L	13, 15, 17, 53, 55	EG2, EXM	DGZ		One Leaf
17									SPRING, Rear Leaf
	68013781AA	2	2, 6	L	13, 15, 17	EG2, EXM	DGZ		

SPRINTER (VB)

SERIES	LINE	BODY	ENGINE	TRANSMISSION
L = LOWLINE	3 = HD DODGE 2WD 2 = Med. Duty DODGE 2WD	03 = CAB CHASSIS WHEEL BASE 3 05 = CAB CHASSIS WHEEL BASE 5 13 = 119 WB 53 = 119 WB 15 = VAN WHEEL BASE 5 55 = WAGON WHEEL BASE 5 17 = VAN WHEEL BASE 7	EG2 = 3.5L V6 Gas Engine EXM = 3.0L V6 Turbo Diesel Engine	DGZ = 5-Speed Auto W5A380 Transmission

Rear Springs
Figure 17-110

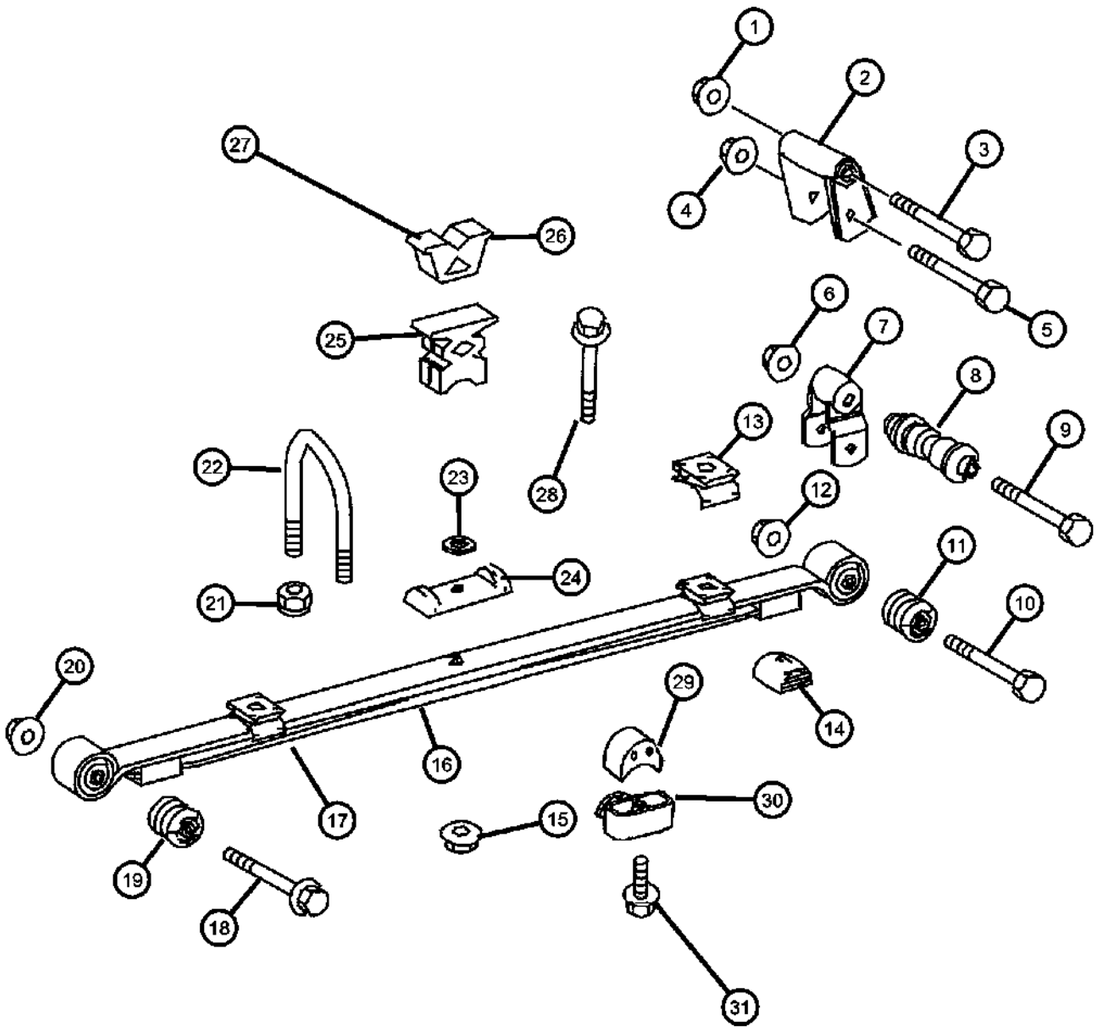

ITEM	PART NUMBER	QTY	LINE	SERIES	BODY	ENGINE	TRANS	TRIM	DESCRIPTION
	68017214AA	2	2, 6	L	13, 15, 17	EG2, EXM	DGZ		With [3AT + XCB]
	68017250AA	2	2, 6	L	53, 55	EG2, EXM	DGZ		With [3B4 + XCB]
18	06104247AA	2	2, 6	L		EG2, EXM	DGZ		BOLT
19									BUSHING, Spring
	05118729AA	2	3, 7	L	03, 05	EG2, EXM	DGZ		Front
	68013792AA	4	2, 3, 6, 7	L		EG2, EXM	DGZ		Front
		2	3, 7	L	13, 15, 17, 53, 55	EXM	DGZ		Front
20									NUT
	06105171AA	2	3, 7	L	03, 05	EG2, EXM	DGZ		M12x1.5
		2	2, 3, 6, 7	L	13, 15, 17, 53, 55	EG2, EXM	DGZ		M12x1.5
	06105173AA	2	3, 7	L		EG2, EXM	DGZ		
21									NUT
	05103727AA	8	3, 7	L	03, 05	EG2, EXM	DGZ		U-Bolt
		8	2, 3, 6, 7	L	13, 15, 17, 53, 55	EG2, EXM	DGZ		U-Bolt
22									U-BOLT
	05104069AA	4	3, 7	L	03, 05	EG2, EXM	DGZ		With [Z2D+SNB]
		4	2, 6	L	13, 15, 17, 53, 55	EG2	DGZ		
	05104070AA	4	3, 7	L	03, 05	EG2, EXM	DGZ		With [SNB And / Or XZB]
		4	3, 7	L	13, 15, 17, 53, 55	EXM	DGZ		With [Z2D+SNB]
		4	3, 7	L	03, 05	EG2, EXM	DGZ		
	05118765AA	4	3, 7	L	03, 05	EG2, EXM	DGZ		With [Z2D+XZB]
23	05118765AA	4							WASHER, (NOT SERVICED),
24									PLATE, Rear Spring U-Bolt
	68013794AA	2	2, 6	L		EG2, EXM	DGZ		
	68013795AA	2	3, 7	L		EG2, EXM	DGZ		
25									BUMPER, Jounce
	05128586AA	2	3, 7	L	03, 05	EG2	DGZ		Spring Stop
		2	2, 6	L	13, 15, 17, 53, 55	EG2	DGZ		Spring Stop
26	05118762AA	2	2, 3, 6, 7	L		EG2, EXM	DGZ		BUMPER, Jounce

SPRINTER (VB)

SERIES	LINE	BODY	ENGINE	TRANSMISSION
L = LOWLINE	3 = HD DODGE 2WD 2 = Med. Duty DODGE 2WD	03 = CAB CHASSIS WHEEL BASE 3 05 = CAB CHASSIS WHEEL BASE 5 13 = 119 WB 53 = 119 WB 15 = VAN WHEEL BASE 5 55 = WAGON WHEEL BASE 5 17 = VAN WHEEL BASE 7	EG2 = 3.5L V6 Gas Engine EXM = 3.0L V6 Turbo Diesel Engine	DGZ = 5-Speed Auto W5A380 Transmission

Rear Springs
Figure 17-110

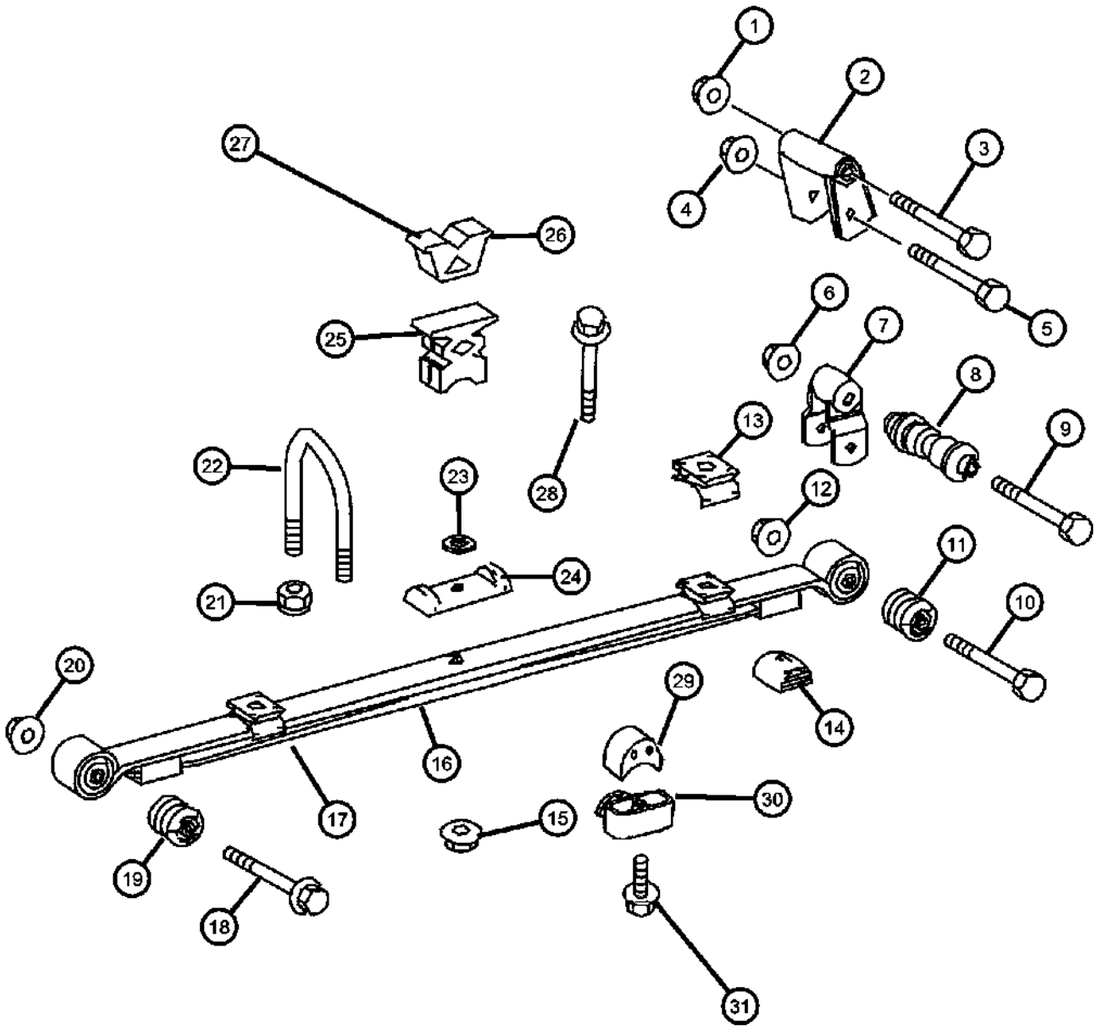

ITEM	PART NUMBER	QTY	LINE	SERIES	BODY	ENGINE	TRANS	TRIM	DESCRIPTION
27									BUMPER, Spring, Rear
	05118759AA	2	3, 7	L	03, 05	EG2, EXM	DGZ		
		2	3, 7	L	13, 15, 17	EG2, EXM	DGZ		
28									BOLT, Spring
	68013789AA	2	3, 7	L	03, 05	EG2, EXM	DGZ		
		2	3, 7	L	13, 15, 17, 53, 55	EXM	DGZ		
	68017219AA	2	3, 7	L	03, 05	EG2, EXM	DGZ		With [XZB]
29	68017223AA	2	3	L	05	EG2, EXM	DGZ		BUMPER, Jounce, With [2MR]
30	68017225AA	2	3	L	05	EG2, EXM	DGZ		BUMPER, Jounce, With [2MR]
31	68017226AA	2	3, 7	L	03, 05, 13, 15, 17	EG2, EXM	DGZ		SCREW, Isolator To Base

SPRINTER (VB)

SERIES	LINE	BODY	ENGINE	TRANSMISSION
L = LOWLINE	3 = HD DODGE 2WD 2 = Med. Duty DODGE 2WD	03 = CAB CHASSIS WHEEL BASE 3 05 = CAB CHASSIS WHEEL BASE 5 13 = 119 WB 53 = 119 WB 15 = VAN WHEEL BASE 5 55 = WAGON WHEEL BASE 5 17 = VAN WHEEL BASE 7	EG2 = 3.5L V6 Gas Engine EXM = 3.0L V6 Turbo Diesel Engine	DGZ = 5-Speed Auto W5A380 Transmission

Rear Shocks & Stabilizer Bar
Figure 17-210

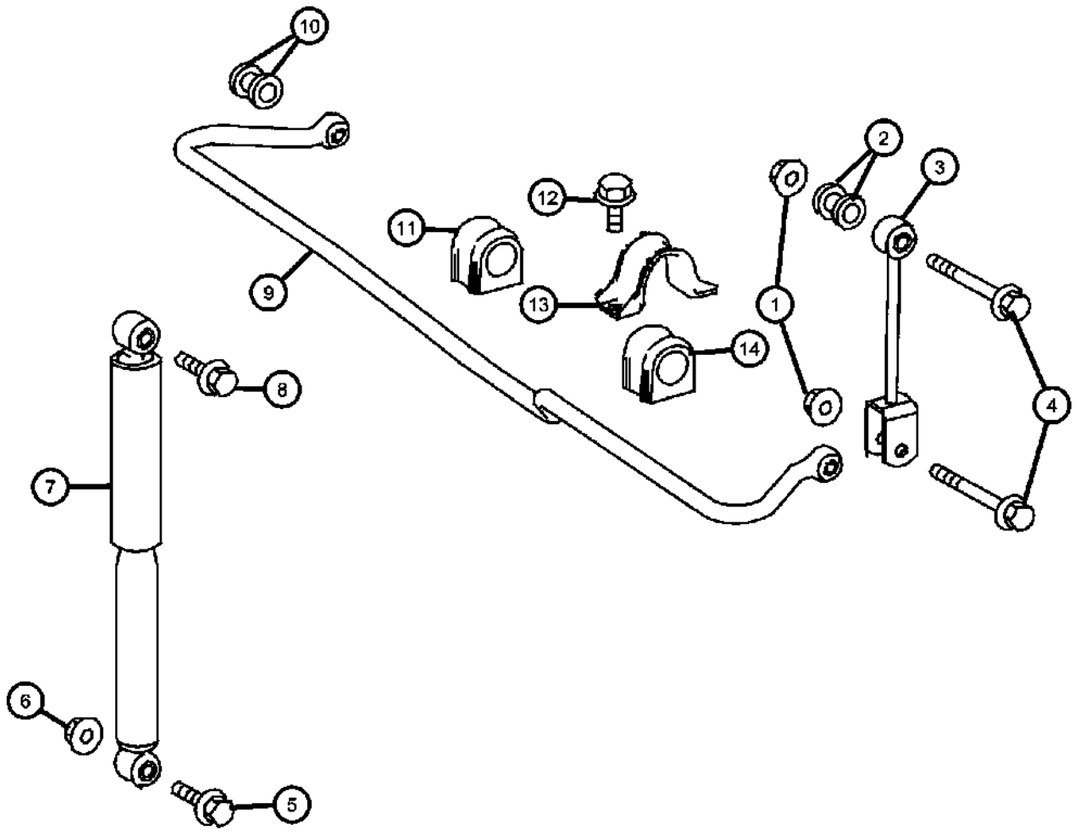

ITEM	PART NUMBER	QTY	LINE	SERIES	BODY	ENGINE	TRANS	TRIM	DESCRIPTION
1									NUT
	05080289AA	1	2, 3, 6, 7	L		EG2	DGZ		
	06105171AA	2	2, 6	L	13, 15, 17, 53, 55	EG2	DGZ		
2	05103955AA	2	2, 3, 6, 7	L		EG2, EXM	DGZ		BUSHING, Stabilizer Bar
3	68013817AA	2	2, 6	L	13, 15, 17, 53, 55	EG2, EXM	DGZ		LINK, Stabilizer Bar
4									SCREW
	06104239AA	4	2, 6	L	13, 15, 17, 53, 55	EG2, EXM	DGZ		Torsion Bar To Link
	06104249AA	2	2, 6	L	13, 15, 17, 53, 55	EG2, EXM	DGZ		Link To Frame
5	06104241AB	2	2, 6	L	13, 15, 17, 53, 55	EG2	DGZ		SCREW, Shock Absorber To Rear Axle
6	06105171AA	2	2, 3, 6, 7	L	13, 15, 17, 53, 55	EG2, EXM	DGZ		NUT, M12x1.5
7	68013825AA	2	2, 6	L	13, 15, 17, 53, 55	EG2, EXM	DGZ		SHOCK ABSORBER, Suspension, Rear
8	06104267AA	2	2, 3, 6, 7	L		EG2, EXM	DGZ		SCREW
9									STABILIZER BAR, Rear Suspension
	68005320AA	1	2, 6	L		EG2, EXM	DGZ		With [58C]
	68013798AA	1	2, 6	L	13, 15, 17, 53, 55	EG2, EXM	DGZ		With [SHC]
10	05103955AA	2	2, 3, 6, 7	L		EG2, EXM	DGZ		BUSHING, Stabilizer Bar
11	68013812AA	2	2, 6	L	13, 15, 17, 53, 55	EG2, EXM	DGZ		BUSHING, Stabilizer Bar
12	68013815AA	4	2, 3, 6, 7	L		EG2, EXM	DGZ		SCREW
13	68013810AA	2	2, 6	L		EG2, EXM	DGZ		RETAINER, Stabilizer Bar Grommet
14	68013812AA	2	2, 6	L	53, 55, 13, 15, 17	EG2, EXM	DGZ		BUSHING, Stabilizer Bar

SPRINTER (VB)

SERIES	LINE	BODY	ENGINE	TRANSMISSION
L = LOWLINE	3 = HD DODGE 2WD 2 = Med. Duty DODGE 2WD	03 = CAB CHASSIS WHEEL BASE 3 05 = CAB CHASSIS WHEEL BASE 5 13 = 119 WB 53 = 119 WB 15 = VAN WHEEL BASE 5 55 = WAGON WHEEL BASE 5 17 = VAN WHEEL BASE 7	EG2 = 3.5L V6 Gas Engine EXM = 3.0L V6 Turbo Diesel Engine	DGZ = 5-Speed Auto W5A380 Transmission

Rear Shocks & Stabilizer Bar
Figure 17-220

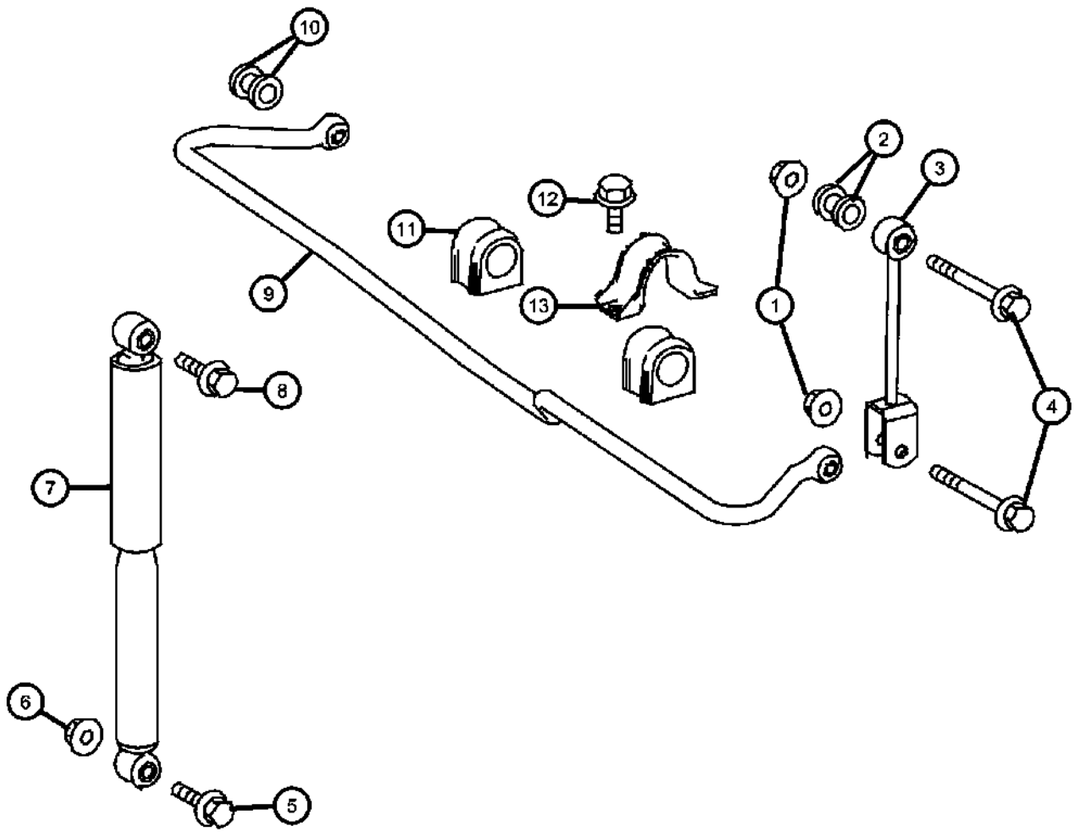

ITEM	PART NUMBER	QTY	LINE	SERIES	BODY	ENGINE	TRANS	TRIM	DESCRIPTION
1	06105171AA	2	3, 7	L	03, 05	EG2, EXM	DGZ		NUT
2	05103955AA	2	2, 3, 6, 7	L		EG2, EXM	DGZ		BUSHING, Stabilizer Bar
3	68013818AA	2	3, 7	L	03, 05, 13, 15, 17	EG2, EXM	DGZ		LINK, Stabilizer Bar
4	06104257AA	2	3, 7	L	03, 05	EG2, EXM	DGZ		SCREW
5									SCREW
	06104241AB	2	3, 7	L	03, 05	EG2, EXM	DGZ		
	06104263AA	2	3, 7	L		EG2, EXM	DGZ		
6	06105171AA	2	3, 7	L	03, 05	EG2, EXM	DGZ		NUT, M12x1.5
7									SHOCK ABSORBER, Suspension, Rear
	68013826AA	2	3, 7	L	03, 05, 13, 15, 17	EG2, EXM	DGZ		
	68013827AA	2	3, 7	L	03, 05	EG2, EXM	DGZ		With [SHK]
	68017247AA	2	3	L	05	EG2, EXM	DGZ		With [2MR+SHK+AMK]
8	68013828AA	2	3, 7	L	03, 05, 13, 15, 17	EG2, EXM	DGZ		SCREW
9									STABILIZER BAR, Rear Suspension
	68013801AA	1	3, 7	L	03, 05, 13, 15, 17	EG2, EXM	DGZ		With [SHC]
	68017230AA	1	3, 7	L	03, 05, 13, 15, 17	EG2, EXM	DGZ		With [58C]
10									BUSHING, Stabilizer Bar
	05103955AA	2	2, 3, 6, 7	L		EG2, EXM	DGZ		With [SHC] Or With [SHK]
	68013807AA	2	3, 7	L		EG2, EXM	DGZ		
11									BUSHING, Stabilizer Bar
	68013814AA	2	3, 7	L	03, 05, 13, 15, 17	EG2, EXM	DGZ		With [SHC] Sales Codes
	68017240AA	2	3, 7	L		EG2, EXM	DGZ		With [58C] Sales Codes
12									SCREW
	68013815AA	4	2, 3, 6, 7	L		EG2, EXM	DGZ		With [SHC]
	68013816AA	4	3, 7	L	03, 05, 13, 15, 17	EG2, EXM	DGZ		
13	68013811AA	2	3, 7	L	03, 05, 13, 15, 17	EG2, EXM	DGZ		RETAINER, Stabilizer Bar Grommet

SPRINTER (VB)

SERIES	LINE	BODY	ENGINE	TRANSMISSION
L = LOWLINE	3 = HD DODGE 2WD 2 = Med. Duty DODGE 2WD	03 = CAB CHASSIS WHEEL BASE 3 05 = CAB CHASSIS WHEEL BASE 5 13 = 119 WB 53 = 119 WB 15 = VAN WHEEL BASE 5 55 = WAGON WHEEL BASE 5 17 = VAN WHEEL BASE 7	EG2 = 3.5L V6 Gas Engine EXM = 3.0L V6 Turbo Diesel Engine	DGZ = 5-Speed Auto W5A380 Transmission

Group - 19

Steering

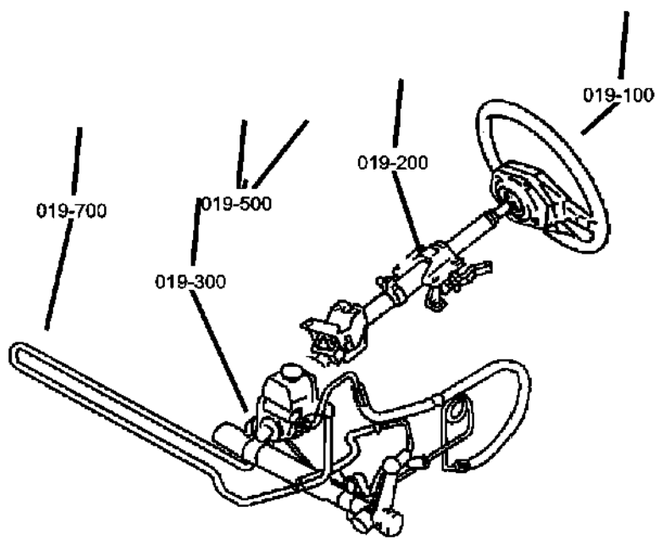

019-100 Steering Wheel 	**019-200** Steering Column 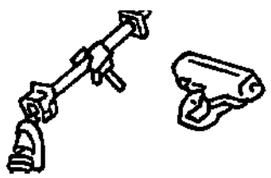	**019-300** Steering Gear 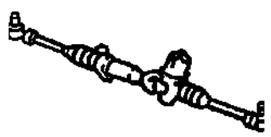	**019-500** Power Steering Pump 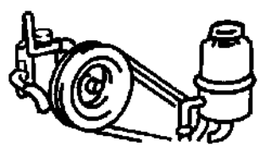
019-700 Power Steering Hoses 			

Group - 19 Steering

Illustration Title — Group-Fig. No.

Steering Wheel
Steering Wheel and Related ..... Fig. 19 - 110

Steering Column
Column, Steering ..... Fig. 19 - 210

Steering Gear
Gear, Steering ..... Fig. 19 - 310

Power Steering Pump
Pump, Power Steering ..... Fig. 19 - 510
Pump, Power Steering ..... Fig. 19 - 520

Power Steering Hoses
Power Steering Reservoir & Cooler ..... Fig. 19 - 710
Power Steering Reservoir & Cooler ..... Fig. 19 - 720

Steering Wheel and Related
Figure 19-110

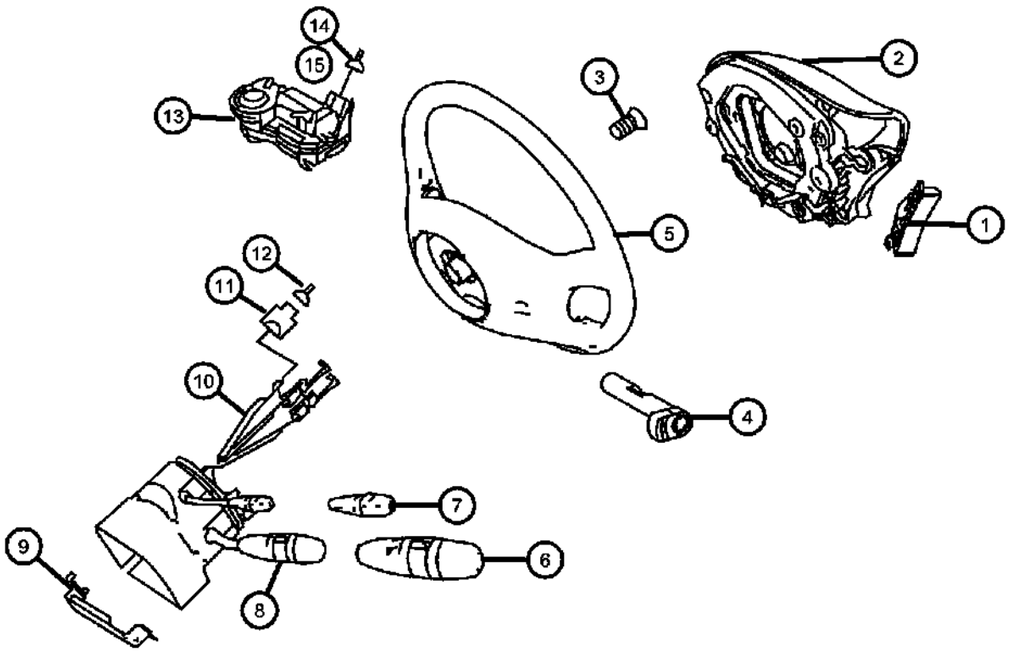

ITEM	PART NUMBER	QTY	LINE	SERIES	BODY	ENGINE	TRANS	TRIM	DESCRIPTION
1	68010427AA	1	2, 3, 6, 7	L		EG2, EXM	DGZ		SWITCH, Steering Wheel, Reconfigurable, One Pair
2									AIR BAG, Driver
	68010423AA	1	2, 3	L		EG2, EXM	DGZ		Dodge with Steering Wheel Controls
	68010426AA	1	2, 3	L		EG2, EXM	DGZ		Dodge without Steering Wheel Controls
	68020911AA	1	6, 7	L		EG2, EXM	DGZ		Freightliner with Steering Wheel Controls
	68020912AA	1	6, 7	L		EG2, EXM	DGZ		Freightliner without Steering Wheel Controls
3									BOLT, BOLT
	04649132AA	1	2, 3, 6, 7	L	13, 15, 17, 53, 55	EG2, EXM	DGZ		M16
		1	3, 7	L	03, 05	EG2, EXM	DGZ		M16
4	68010438AA	1	2, 3, 6, 7	L		EG2, EXM	DGZ		PIN
5	68010421AA	1	2, 3, 6, 7	L		EG2, EXM	DGZ		WHEEL, Steering
6	68010446AA	1	2, 3, 6, 7	L		EG2, EXM	DGZ		COVER, Blinker Switch
7	68010447AA	1	2, 3, 6, 7	L		EG2, EXM	DGZ		COVER, Switch
8	68010449AA	1	2, 3, 6, 7	L		EG2, EXM	DGZ		SHROUD, Steering Column, Steering Column Jacket Tube
9	68010457AA	1	2, 3, 6, 7	L		EG2, EXM	DGZ		BRACKET, Steering Column
10	68010451AA	1	2, 3, 6, 7	L		EG2, EXM	DGZ		CLOCKSPRING
11									CONNECTOR
	05120717AA	1	3, 7	L	03, 05	EG2, EXM	DGZ		Jacket Tube Module 3-Pin,COD.A
		1	2, 3, 6, 7	L	13, 15, 17, 53, 55	EG2, EXM	DGZ		Jacket Tube Module 3-Pin,COD.A
12									TERMINAL
	05103873AA	3	3, 7	L	03, 05	EG2, EXM	DGZ		0.75MM2 MQS
		3	2, 3, 6, 7	L	13, 15, 17, 53, 55	EG2, EXM	DGZ		0.75MM2 MQS
13	68010437AA	1	2, 3, 6, 7	L		EG2, EXM	DGZ		MODULE, Steering Control
14	05133370AA	2	2, 3, 6, 7	L		EG2, EXM	DGZ		TERMINAL, Female, 1.5-2.5MM2 JPT;N26/5
15									GASKET
	05120833AA	2	2, 3, 6, 7	L		EG2, EXM	DGZ		1.0-2.5MM;N25/5
	05120858AA	2	2, 3, 6, 7	L		EG2, EXM	DGZ		N26/5

SPRINTER (VB)

SERIES	LINE	BODY	ENGINE	TRANSMISSION
L = LOWLINE	3 = HD DODGE 2WD 2 = Med. Duty DODGE 2WD	03 = CAB CHASSIS WHEEL BASE 3 05 = CAB CHASSIS WHEEL BASE 5 13 = 119 WB 53 = 119 WB 15 = VAN WHEEL BASE 5 55 = WAGON WHEEL BASE 5 17 = VAN WHEEL BASE 7	EG2 = 3.5L V6 Gas Engine EXM = 3.0L V6 Turbo Diesel Engine	DGZ = 5-Speed Auto W5A380 Transmission

AR = use ase required - = Non illustrrated part

<< RETURN TO GROUP INDEX

Column, Steering
Figure 19-210

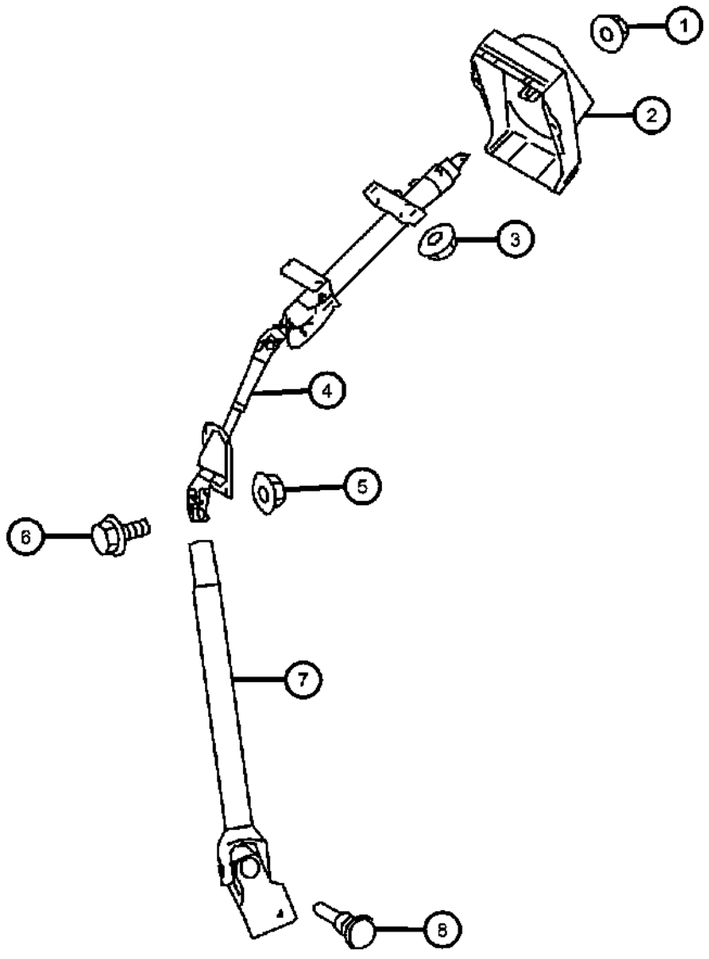

ITEM	PART NUMBER	QTY	LINE	SERIES	BODY	ENGINE	TRANS	TRIM	DESCRIPTION
1									NUT, Hex
	05097674AA	1	2, 3, 6, 7	L	13, 15, 17, 53, 55	EG2, EXM	DGZ		Fastening for Lining M5
		1	3, 7	L	03, 05	EG2, EXM	DGZ		Fastening for Lining M5
2	68004807AA	1	2, 3, 6, 7	L		EG2, EXM	DGZ		SHROUD, Steering Column
3									NUT
	06105169AA	4	3, 7	L	03, 05	EG2, EXM	DGZ		Steering Column to Carrier M8
	68004878AA	4	2, 3, 6, 7	L	13, 15, 17, 53, 55	EG2, EXM	DGZ		Steering Column to Firewall M6
4	68010429AA	1	2, 3, 6, 7	L		EG2, EXM	DGZ		COLUMN, Steering
5	06105169AA	1	2, 3, 6, 7	L		EG2, EXM	DGZ		NUT
6									SCREW, Steering Column
	68010433AA	1	3, 7	L	03, 05	EG2, EXM	DGZ		Steering Column to Steering Shaft
		1	2, 3, 6, 7	L	13, 15, 17, 53, 55	EG2, EXM	DGZ		Steering Column to Steering Shaft
7									SHAFT, Steering Column
	68010431AA	1	3, 7	L	03, 05	EG2, EXM	DGZ		
		1	2, 3, 6, 7	L	13, 15, 17, 53, 55	EG2, EXM	DGZ		
8									SCREW, Steering Column
	05125707AA	1	2, 3, 6, 7	L	13, 15, 17, 53, 55	EG2, EXM	DGZ		
		1	2, 3, 6, 7	L	03, 05	EG2, EXM	DGZ		

SPRINTER (VB)

SERIES	LINE	BODY	ENGINE	TRANSMISSION
L = LOWLINE	3 = HD DODGE 2WD 2 = Med. Duty DODGE 2WD	03 = CAB CHASSIS WHEEL BASE 3 05 = CAB CHASSIS WHEEL BASE 5 13 = 119 WB 53 = 119 WB 15 = VAN WHEEL BASE 5 55 = WAGON WHEEL BASE 5 17 = VAN WHEEL BASE 7	EG2 = 3.5L V6 Gas Engine EXM = 3.0L V6 Turbo Diesel Engine	DGZ = 5-Speed Auto W5A380 Transmission

Gear, Steering
Figure 19-310

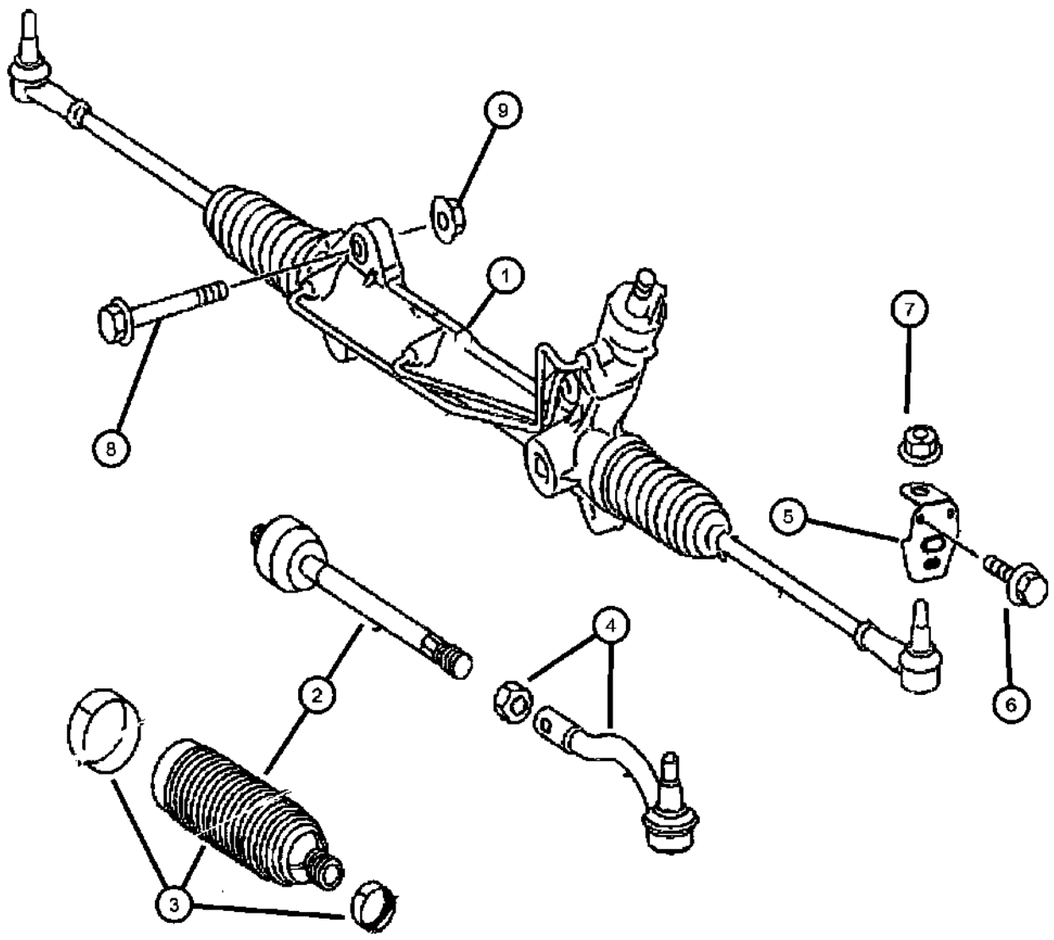

ITEM	PART NUMBER	QTY	LINE	SERIES	BODY	ENGINE	TRANS	TRIM	DESCRIPTION
1	68012180AA	1	2, 3, 6, 7	L		EG2, EXM	DGZ		GEAR, Power Steering
2	68020843AA	2	2, 3, 6, 7	L		EG2, EXM	DGZ		END, Tie Rod, Inner Tie Rod End Package Includes Boot Repair Package [#3]
3	68020844AA	2	2, 3, 6, 7	L		EG2, EXM	DGZ		BOOT, Steering Gear
4	68020845AA	2	2, 3, 6, 7	L		EG2, EXM	DGZ		JOINT
5	68012183AA	2	6, 7, 2, 3	L		EG2, EXM	DGZ		PLATE
6	06104140AA	2	2, 3, 6, 7	L	13, 15, 17, 53, 55	EG2, EXM	DGZ		SCREW
7	06105172AA	2	2, 3, 6, 7	L	13, 15, 17, 53, 55	EG2, EXM	DGZ		NUT
8	68012181AA	4	2, 3, 6, 7	L		EG2, EXM	DGZ		BOLT
9	06105171AA	4	2, 3, 6, 7	L	13, 15, 17, 53, 55	EG2, EXM	DGZ		NUT

SPRINTER (VB)

SERIES	LINE	BODY	ENGINE	TRANSMISSION
L = LOWLINE	3 = HD DODGE 2WD 2 = Med. Duty DODGE 2WD	03 = CAB CHASSIS WHEEL BASE 3 05 = CAB CHASSIS WHEEL BASE 5 13 = 119 WB 53 = 119 WB 15 = VAN WHEEL BASE 5 55 = WAGON WHEEL BASE 5 17 = VAN WHEEL BASE 7	EG2 = 3.5L V6 Gas Engine EXM = 3.0L V6 Turbo Diesel Engine	DGZ = 5-Speed Auto W5A380 Transmission

Pump, Power Steering
Figure 19-510

ITEM	PART NUMBER	QTY	LINE	SERIES	BODY	ENGINE	TRANS	TRIM	DESCRIPTION
1	68006168AA	1	2, 3, 6, 7	L		EG2	DGZ		PUMP, Power Steering
2	06104025AA	2	2, 3, 6, 7	L		EG2	DGZ		SCREW, Hex Flange Head, M8X1.25X30.0, [8x30]
-3									BOLT
	05136546AA	1	2, 3, 6, 7	L		EG2	DGZ		[M8x25]
	06104697AA	2	2, 3, 6, 7	L		EG2	DGZ		[M8x34]
-4	68006177AA	4	2, 3, 6, 7	L		EG2	DGZ		SCREW, [M8x44]

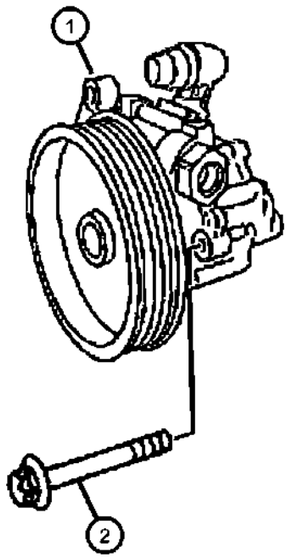

SPRINTER (VB)

SERIES	LINE	BODY	ENGINE	TRANSMISSION
L = LOWLINE	3 = HD DODGE 2WD 2 = Med. Duty DODGE 2WD	03 = CAB CHASSIS WHEEL BASE 3 05 = CAB CHASSIS WHEEL BASE 5 13 = 119 WB 53 = 119 WB 15 = VAN WHEEL BASE 5 55 = WAGON WHEEL BASE 5 17 = VAN WHEEL BASE 7	EG2 = 3.5L V6 Gas Engine EXM = 3.0L V6 Turbo Diesel Engine	DGZ = 5-Speed Auto W5A380 Transmission

Pump, Power Steering
Figure 19-520

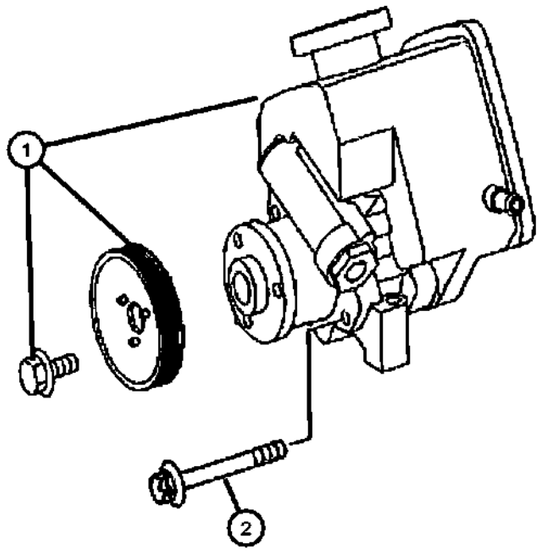

ITEM	PART NUMBER	QTY	LINE	SERIES	BODY	ENGINE	TRANS	TRIM	DESCRIPTION
1	68012236AA	1	2, 3, 6, 7	L		EXM	DGZ		PUMP, Power Steering
2	05133207AA	4	2, 3, 6, 7	L		EXM	DGZ		BOLT, [M8x55]
-3	05073723AB	1	2, 3, 6, 7	L		EXM	DGZ		SCREW, [M8x20]
-4	06104025AA	2	2, 3, 6, 7	L		EXM	DGZ		SCREW, Hex Flange Head, M8X1.25X30.0, [M8x30]

SPRINTER (VB)

SERIES	LINE	BODY	ENGINE	TRANSMISSION
L = LOWLINE	3 = HD DODGE 2WD 2 = Med. Duty DODGE 2WD	03 = CAB CHASSIS WHEEL BASE 3 05 = CAB CHASSIS WHEEL BASE 5 13 = 119 WB 53 = 119 WB 15 = VAN WHEEL BASE 5 55 = WAGON WHEEL BASE 5 17 = VAN WHEEL BASE 7	EG2 = 3.5L V6 Gas Engine EXM = 3.0L V6 Turbo Diesel Engine	DGZ = 5-Speed Auto W5A380 Transmission

Power Steering Reservoir & Cooler
Figure 19-710

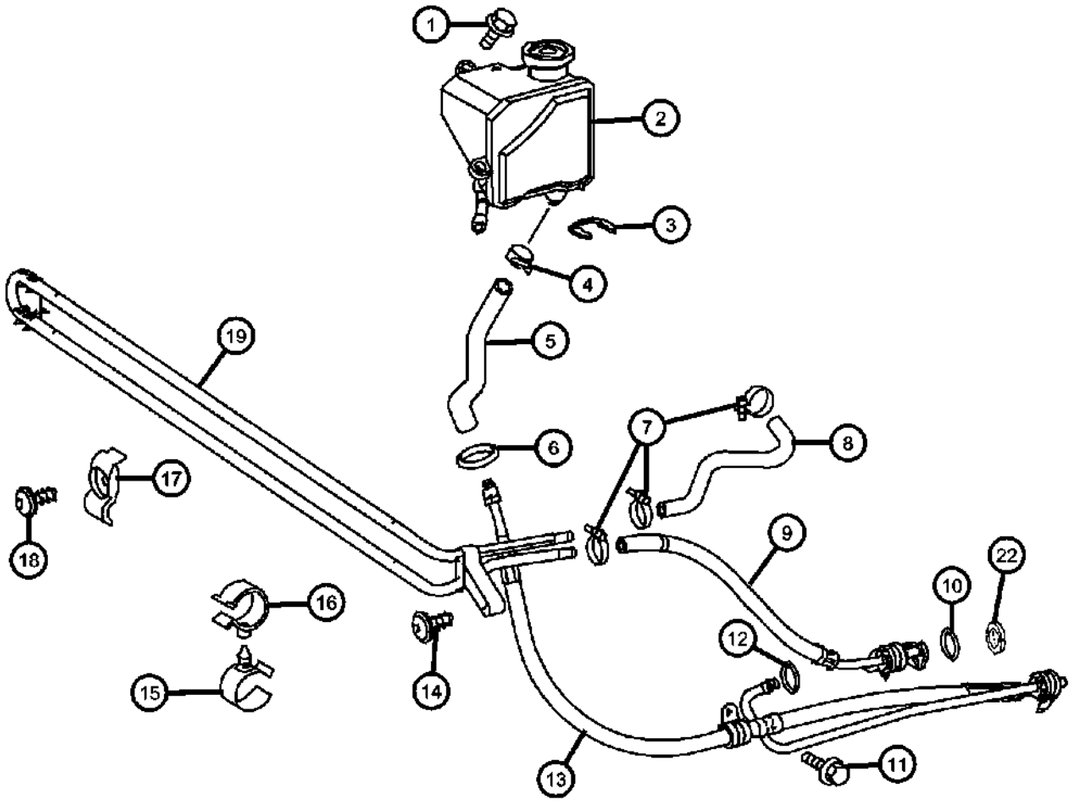

ITEM	PART NUMBER	QTY	LINE	SERIES	BODY	ENGINE	TRANS	TRIM	DESCRIPTION
1	06104683AA	3	2, 3, 6, 7	L		EG2	DGZ		SCREW, [M6x23]
2	68006175AA	1	2, 3, 6, 7	L		EG2	DGZ		RESERVOIR, Power Steering Pump
3	05189055AA	1	2, 3, 6, 7	L		EG2	DGZ		CLIP, Retaining, C Type
4	05189055AA	1							CLAMP, [26MM], (NOT SERVICED)
5	68006678AA	1	2, 3, 6, 7	L		EG2	DGZ		HOSE, Power Steering
6	05183128AA	1	2, 3, 6, 7	L		EG2	DGZ		O RING, [7.65 x 1.63 MM]
7	05132830AA	1	2, 3, 6, 7	L		EG2, EXM	DGZ		CLAMP
8	68006678AA	1	2, 3, 6, 7	L		EG2	DGZ		HOSE, Power Steering
9									LINE, Power Steering Return
	68006671AA	1	3, 7	L	03, 05	EG2, EXM	DGZ		
		1	2, 3, 6, 7	L	13, 15, 17, 53, 55	EG2, EXM	DGZ		
10	68006673AA	1	2, 3, 6, 7	L		EG2, EXM	DGZ		O RING, [7.66x1.78MM]
11	06104022AA	1	2, 3, 6, 7	L		EG2	DGZ		SCREW, [M8x16]
12	68006673AA	1	2, 3, 6, 7	L		EG2, EXM	DGZ		O RING
13	68006668AA	1	2, 3, 6, 7	L		EG2	DGZ		HOSE, Power Steering Pressure
14	68006685AA	4	2, 3, 6, 7	L		EG2, EXM	DGZ		SCREW
15									CLAMP, Brake Hose
	05125887AB	1	3, 7	L	03, 05	EG2, EXM	DGZ		
		1	2, 3, 6, 7	L	13, 15, 17, 53, 55	EG2, EXM	DGZ		
16									CLIP, Brake Line
	05117625AA	1	2, 3, 6, 7	L	13, 15, 17, 53, 55	EG2, EXM	DGZ		
		1	3, 7	L	03, 05	EG2, EXM	DGZ		
17	68006686AA	1	2, 3, 6, 7	L		EG2, EXM	DGZ		CLAMP
18	68006685AA	4	2, 3, 6, 7	L		EG2, EXM	DGZ		SCREW
19	68006683AA	1	2, 3, 6, 7	L		EG2	DGZ		LINE, Oil Cooler, With [HAB]
-20									NUT
	68004878AA	2	3, 7	L	03, 05	EG2, EXM	DGZ		
		2	2, 3, 6, 7	L	13, 15, 17, 53, 55	EG2, EXM	DGZ		
-21									SCREW

SPRINTER (VB)

SERIES	LINE	BODY	ENGINE	TRANSMISSION
L = LOWLINE	3 = HD DODGE 2WD 2 = Med. Duty DODGE 2WD	03 = CAB CHASSIS WHEEL BASE 3 05 = CAB CHASSIS WHEEL BASE 5 13 = 119 WB 53 = 119 WB 15 = VAN WHEEL BASE 5 55 = WAGON WHEEL BASE 5 17 = VAN WHEEL BASE 7	EG2 = 3.5L V6 Gas Engine EXM = 3.0L V6 Turbo Diesel Engine	DGZ = 5-Speed Auto W5A380 Transmission

Power Steering Reservoir & Cooler
Figure 19-710

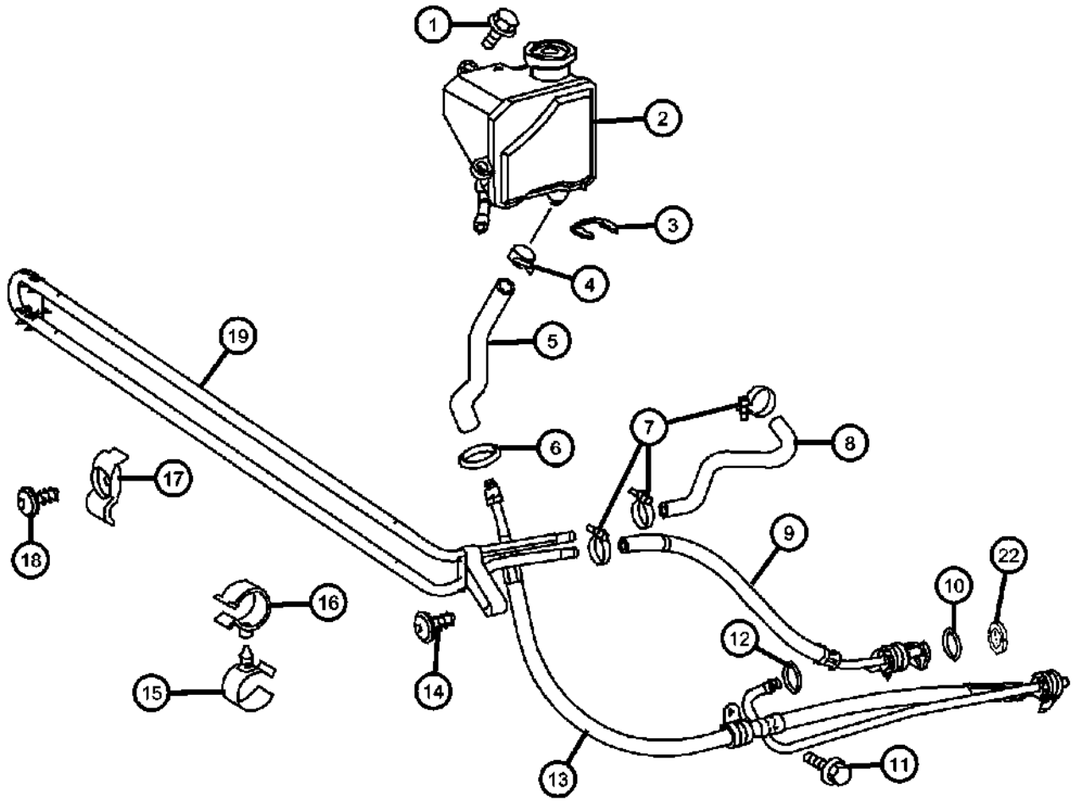

ITEM	PART NUMBER	QTY	LINE	SERIES	BODY	ENGINE	TRANS	TRIM	DESCRIPTION
	05133476AB	2	2, 3, 6, 7	L	13, 15, 17, 53, 55	EG2, EXM	DGZ		
		2	3, 7	L	03, 05	EG2, EXM	DGZ		
22	68006672AA	1	2, 3, 6, 7	L		EG2, EXM	DGZ		O RING, Back Up O Ring

SPRINTER (VB)

SERIES	LINE	BODY	ENGINE	TRANSMISSION
L = LOWLINE	3 = HD DODGE 2WD 2 = Med. Duty DODGE 2WD	03 = CAB CHASSIS WHEEL BASE 3 05 = CAB CHASSIS WHEEL BASE 5 13 = 119 WB 53 = 119 WB 15 = VAN WHEEL BASE 5 55 = WAGON WHEEL BASE 5 17 = VAN WHEEL BASE 7	EG2 = 3.5L V6 Gas Engine EXM = 3.0L V6 Turbo Diesel Engine	DGZ = 5-Speed Auto W5A380 Transmission

AR = use ase required - = Non illustrrated part

<< RETURN TO GROUP INDEX

Power Steering Reservoir & Cooler
Figure 19-720

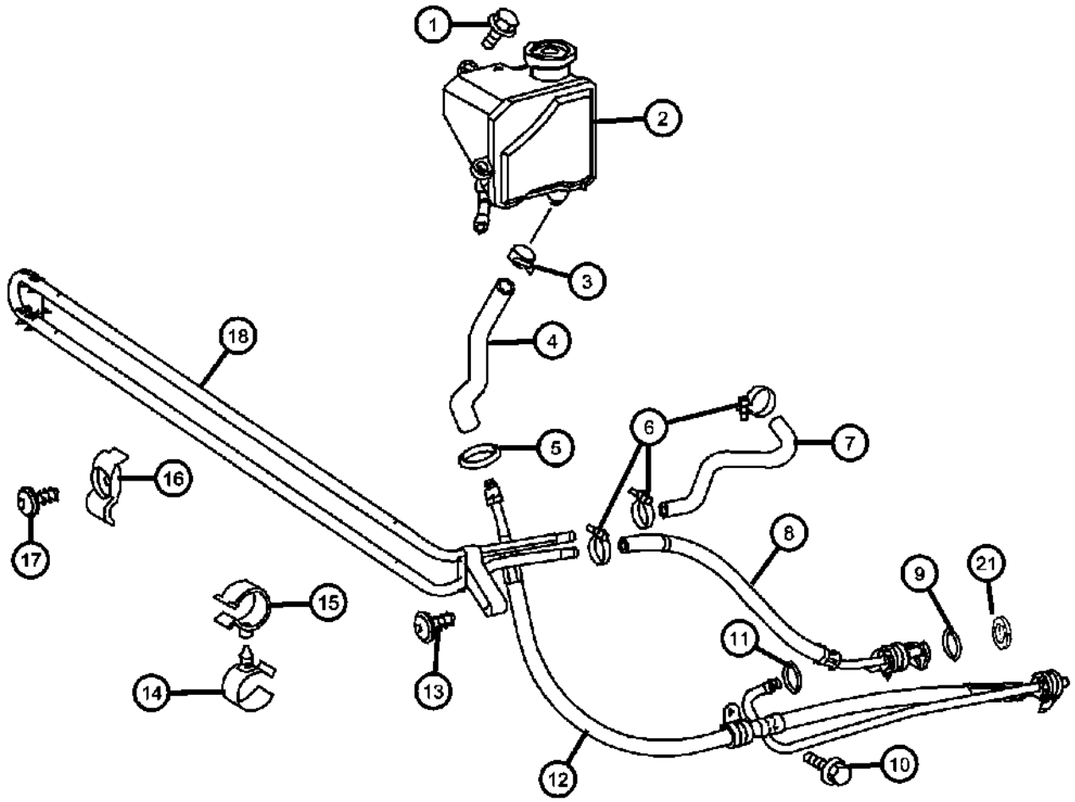

ITEM	PART NUMBER	QTY	LINE	SERIES	BODY	ENGINE	TRANS	TRIM	DESCRIPTION
1									SCREW
	06104683AA	3	3, 7	L	03, 05	EXM	DGZ		M6x23
		3	2, 3, 6, 7	L	13, 15, 17, 53, 55	EXM	DGZ		M6x23
2	68012238AA	1	2, 3, 6, 7	L		EXM	DGZ		RESERVOIR, Power Steering Pump
3									CLAMP
	06104808AA	2	3, 7	L	03, 05	EXM	DGZ		26MM
		2	2, 3, 6, 7	L	13, 15, 17, 53, 55	EXM	DGZ		26MM
4	68012239AA	1	6, 7, 2, 3	L		EXM	DGZ		HOSE, Power Steering
5									O RING
	05183128AA	1	3, 7	L	03, 05	EG2, EXM	DGZ		
		1	6, 2	L	13, 15, 17, 53, 55	EG2, EXM	DGZ		
6	05132830AA	1	2, 3, 6, 7	L		EG2, EXM	DGZ		CLAMP
7	68006677AA	1	2, 3, 6, 7	L		EXM	DGZ		HOSE, Power Steering
8									LINE, Power Steering Return
	68006671AA	1	3, 7	L	03, 05	EG2, EXM	DGZ		
		1	2, 3, 6, 7	L	13, 15, 17, 53, 55	EG2, EXM	DGZ		
9	68006673AA	1	2, 3, 6, 7	L		EG2, EXM	DGZ		O RING, 7.66x1.78MM
10									SCREW
	06104022AA	1	7, 3	L	03, 05	EXM	DGZ		M8x16
		1	2, 3, 6, 7	L	13, 15, 17, 53, 55	EXM	DGZ		M8x16
11	68006673AA	1	2, 3, 6, 7	L		EG2, EXM	DGZ		O RING
12	68006667AA	1	2, 3, 6, 7	L		EXM	DGZ		HOSE, Power Steering Pressure
13	68006685AA	4	2, 3, 6, 7	L		EG2, EXM	DGZ		SCREW
14									CLAMP, Brake Hose
	05125887AB	1	3, 7	L	03, 05	EG2, EXM	DGZ		
		1	2, 3, 6, 7	L	13, 15, 17, 53, 55	EG2, EXM	DGZ		
15									CLIP, Brake Line
	05117625AA	1	7, 3	L	03, 05	EG2, EXM	DGZ		
		1	2, 3, 6, 7	L	13, 15, 17, 53, 55	EG2, EXM	DGZ		

SPRINTER (VB)

SERIES	LINE	BODY	ENGINE	TRANSMISSION
L = LOWLINE	3 = HD DODGE 2WD 2 = Med. Duty DODGE 2WD	03 = CAB CHASSIS WHEEL BASE 3 05 = CAB CHASSIS WHEEL BASE 5 13 = 119 WB 53 = 119 WB 15 = VAN WHEEL BASE 5 55 = WAGON WHEEL BASE 5 17 = VAN WHEEL BASE 7	EG2 = 3.5L V6 Gas Engine EXM = 3.0L V6 Turbo Diesel Engine	DGZ = 5-Speed Auto W5A380 Transmission

Power Steering Reservoir & Cooler
Figure 19-720

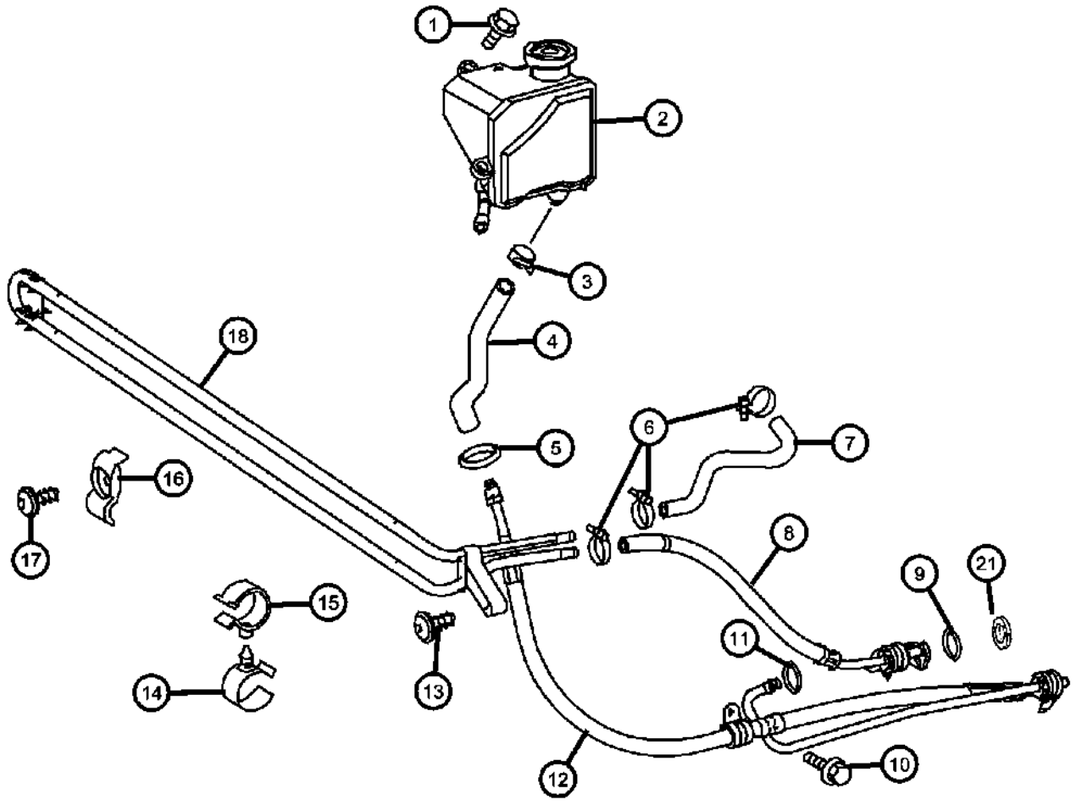

ITEM	PART NUMBER	QTY	LINE	SERIES	BODY	ENGINE	TRANS	TRIM	DESCRIPTION
16	68006686AA	1	2, 3, 6, 7	L		EG2, EXM	DGZ		CLAMP
17	68006685AA	4	2, 3, 6, 7	L		EG2, EXM	DGZ		SCREW
18									LINE, Oil Cooler
	68006681AA	1	6, 7, 2, 3	L		EXM	DGZ		With [HAB]
	68006682AA	1	2, 3, 6, 7	L		EXM	DGZ		Without [HAB]
-19									NUT
	68004878AA	2	3, 7	L	03, 05	EG2, EXM	DGZ		
		2	2, 3, 6, 7	L	13, 15, 17, 53, 55	EG2, EXM	DGZ		
-20									SCREW
	05133476AB	2	2, 3, 6, 7	L	13, 15, 17, 53, 55	EG2, EXM	DGZ		
		2	3, 7	L	03, 05	EG2, EXM	DGZ		
21	68006672AA	1	3, 6, 7, 2	L		EG2, EXM	DGZ		O RING, Back Up O Ring

SPRINTER (VB)

SERIES	LINE	BODY	ENGINE	TRANSMISSION
L = LOWLINE	3 = HD DODGE 2WD 2 = Med. Duty DODGE 2WD	03 = CAB CHASSIS WHEEL BASE 3 05 = CAB CHASSIS WHEEL BASE 5 13 = 119 WB 53 = 119 WB 15 = VAN WHEEL BASE 5 55 = WAGON WHEEL BASE 5 17 = VAN WHEEL BASE 7	EG2 = 3.5L V6 Gas Engine EXM = 3.0L V6 Turbo Diesel Engine	DGZ = 5-Speed Auto W5A380 Transmission

AR = use ase required - = Non illustrrated part

Group - NAG1

Automatic Transmission 5 Speed [DGZ]

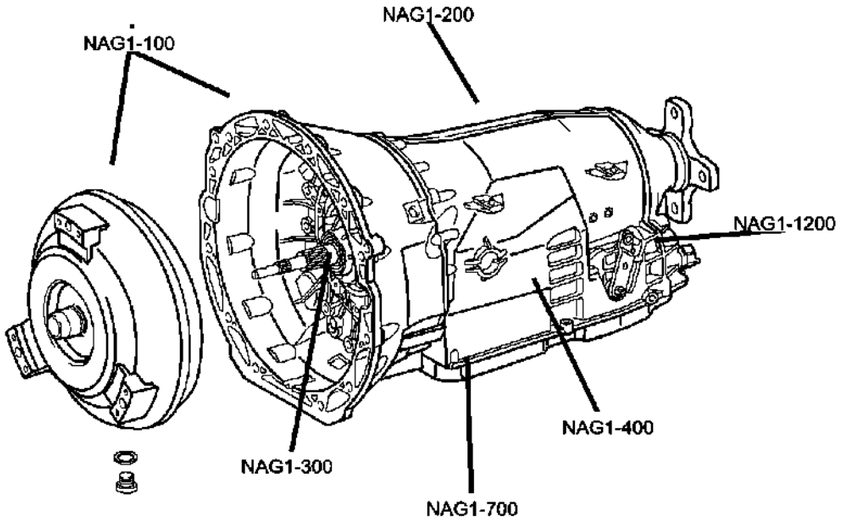

NAG1-100 Transmission Assembly 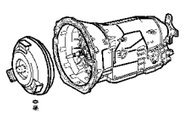	**NAG1-1200** Gearshift Controls 	**NAG1-200** Case and Extension 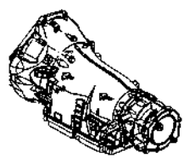	**NAG1-300** Oil Pump 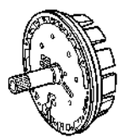
NAG1-400 Gear Train 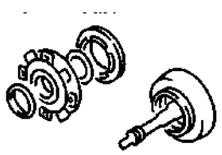	**NAG1-700** Valve Body 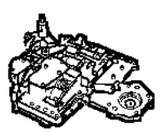		

Group - NAG1 Automatic Transmission 5 Speed [DGZ]

Illustration Title — Group-Fig. No.

Transmission Assembly
Transmission Assembly ..... Fig. NAG1 - 110

Case and Extension
Converter Housing & Oil Pump ..... Fig. NAG1 - 210
Transmission Case, Rear ..... Fig. NAG1 - 220
Oil Filler Tube & Related Parts ..... Fig. NAG1 - 230

Oil Pump
Oil Pump ..... Fig. NAG1 - 310

Gear Train
Laminated Brake / [B1] ..... Fig. NAG1 - 410
Front Planetary Gear Train, Clutch / [K1] ..... Fig. NAG1 - 420
Front Planetary Gear Train / [K1] ..... Fig. NAG1 - 430
Clutch / [K2] Output Shaft ..... Fig. NAG1 - 440
Center Planetary Set / Output Shaft / [MPLS/HPLS] ..... Fig. NAG1 - 450
Clutch / [K3] ..... Fig. NAG1 - 460
Multiple Disk Brake / [B2/B3] ..... Fig. NAG1 - 470
Multiple Disk Brake / [B2/B3] ..... Fig. NAG1 - 480
Multiple Disk Brake / [B2/B3] ..... Fig. NAG1 - 490

Valve Body
Harness To Valve Body Connector Repair ..... Fig. NAG1 - 705
Electronic Hydraulic Control Unit ..... Fig. NAG1 - 710
Oil Pan & Filter ..... Fig. NAG1 - 720

Gearshift Controls
Gearshift Control ..... Fig. NAG1 - 1210

Transmission Assembly
Figure NAG1-110

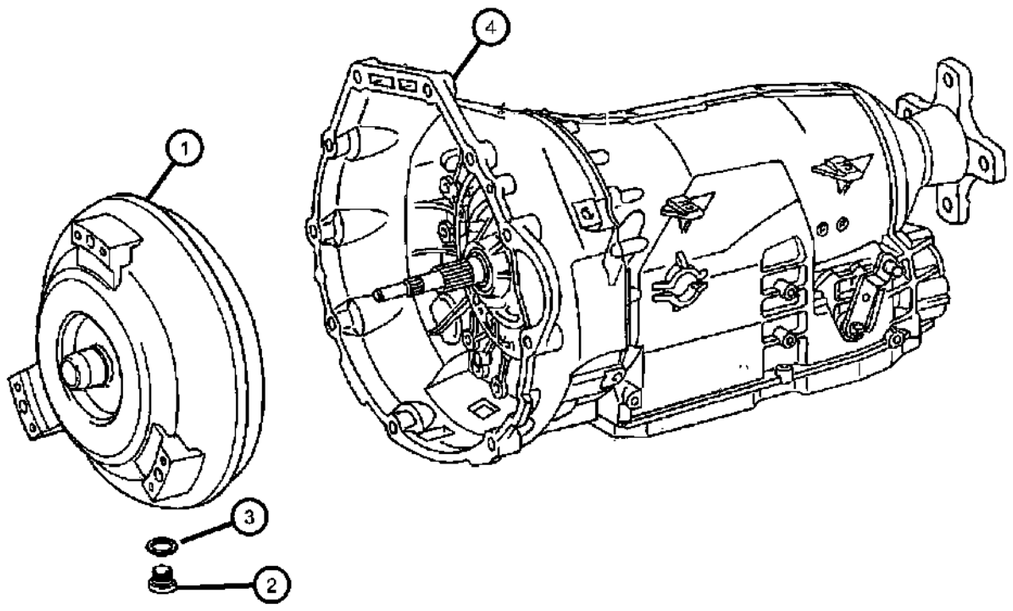

ITEM	PART NUMBER	QTY	LINE	SERIES	BODY	ENGINE	TRANS	TRIM	DESCRIPTION
NOTE:									
Sales Code:									
[DGZ]=5 Speed Automatic Transmission - [W5A380]									
[EGZ]=3.5L V-6 Gas Engine [Mercedes Benz]									
[EXM]=3.0L Turbo Diesel Engine [Mercedes Benz]									
1									CONVERTER, Torque
	05161459AA	1	2, 3, 6, 7	L		EG2	DGZ		
	05175947AA	1	2, 3, 6, 7	L		EXM	DGZ		
2	05080398AB	1	2, 3, 6, 7	L		EG2, EXM	DGZ		PLUG, [M10x1x11MM]
3	05080014AA	1	2, 3, 6, 7	L		EG2, EXM	DGZ		O RING
4									TRANSMISSION, Automatic
	05166032AA	1	2, 3, 6, 7	L		EG2	DGZ		
	05166351AA	1	2, 3, 6, 7	L		EXM	DGZ		
-5	05080067AA	1	2, 3, 6, 7	L		EG2, EXM	DGZ		GASKET PACKAGE, Transmission

SPRINTER (VB)

SERIES	LINE	BODY	ENGINE	TRANSMISSION
L = LOWLINE	3 = HD DODGE 2WD 2 = Med. Duty DODGE 2WD	03 = CAB CHASSIS WHEEL BASE 3 05 = CAB CHASSIS WHEEL BASE 5 13 = 119 WB 53 = 119 WB 15 = VAN WHEEL BASE 5 55 = WAGON WHEEL BASE 5 17 = VAN WHEEL BASE 7	EG2 = 3.5L V6 Gas Engine EXM = 3.0L V6 Turbo Diesel Engine	DGZ = 5-Speed Auto W5A380 Transmission

Converter Housing & Oil Pump
Figure NAG1-210

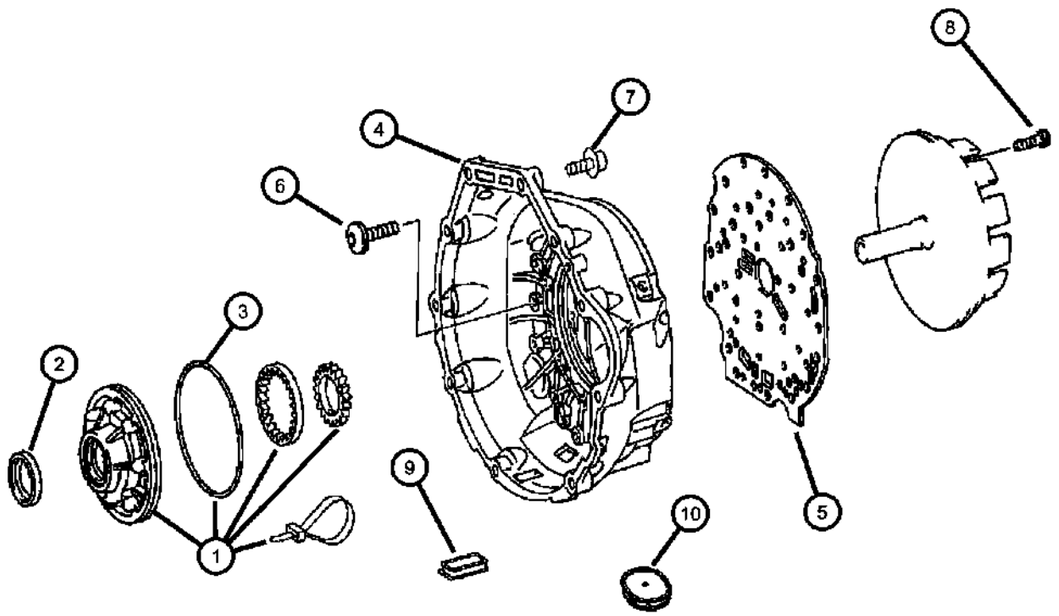

ITEM	PART NUMBER	QTY	LINE	SERIES	BODY	ENGINE	TRANS	TRIM	DESCRIPTION
NOTE:									
Sales Code:									
[DGZ]=5 Speed Automatic Transmission - [W5A380]									
[EGZ]=3.5L V-6 Gas Engine [Mercedes Benz]									
[EXM]=3.0L Turbo Diesel Engine [Mercedes Benz]									
1	05080070AA	1	2, 3, 6, 7	L		EG2, EXM	DGZ		PUMP, Transmission Oil
2	52108424AA	1	2, 3, 6, 7	L		EG2, EXM	DGZ		SEAL
3	52107900AA	1	2, 3, 6, 7	L		EG2, EXM	DGZ		O RING
4	05161462AA	1	2, 3, 6, 7	L		EG2, EXM	DGZ		HOUSING, Torque Converter
5	52108147AA	1	2, 3, 6, 7	L		EG2, EXM	DGZ		PLATE, Intermediate
6									SCREW
	06104158AA	2	2, 3, 6, 7	L		EG2, EXM	DGZ		[M8x40]
	52108206AA	15	2, 3, 6, 7	L		EG2, EXM	DGZ		Bell Housing To Transmission Case [M8x40]
7	52107934AA	11	2, 3, 6, 7	L		EG2, EXM	DGZ		SCREW, Transmission To Engine Block
8	52107933AA	7	2, 3, 6, 7	L		EG2, EXM	DGZ		SCREW, Intermediate Plate & Disc Support To Bell Housing
9	05073886AA	2	2, 3, 6, 7	L		EG2, EXM	DGZ		GASKET, Converter Housing Cover
10	53013767AA	1	2, 3, 6, 7	L		EG2, EXM	DGZ		GASKET, Converter Housing Cover

SPRINTER (VB)

SERIES	LINE	BODY	ENGINE	TRANSMISSION
L = LOWLINE	3 = HD DODGE 2WD 2 = Med. Duty DODGE 2WD	03 = CAB CHASSIS WHEEL BASE 3 05 = CAB CHASSIS WHEEL BASE 5 13 = 119 WB 53 = 119 WB 15 = VAN WHEEL BASE 5 55 = WAGON WHEEL BASE 5 17 = VAN WHEEL BASE 7	EG2 = 3.5L V6 Gas Engine EXM = 3.0L V6 Turbo Diesel Engine	DGZ = 5-Speed Auto W5A380 Transmission

Transmission Case, Rear
Figure NAG1-220

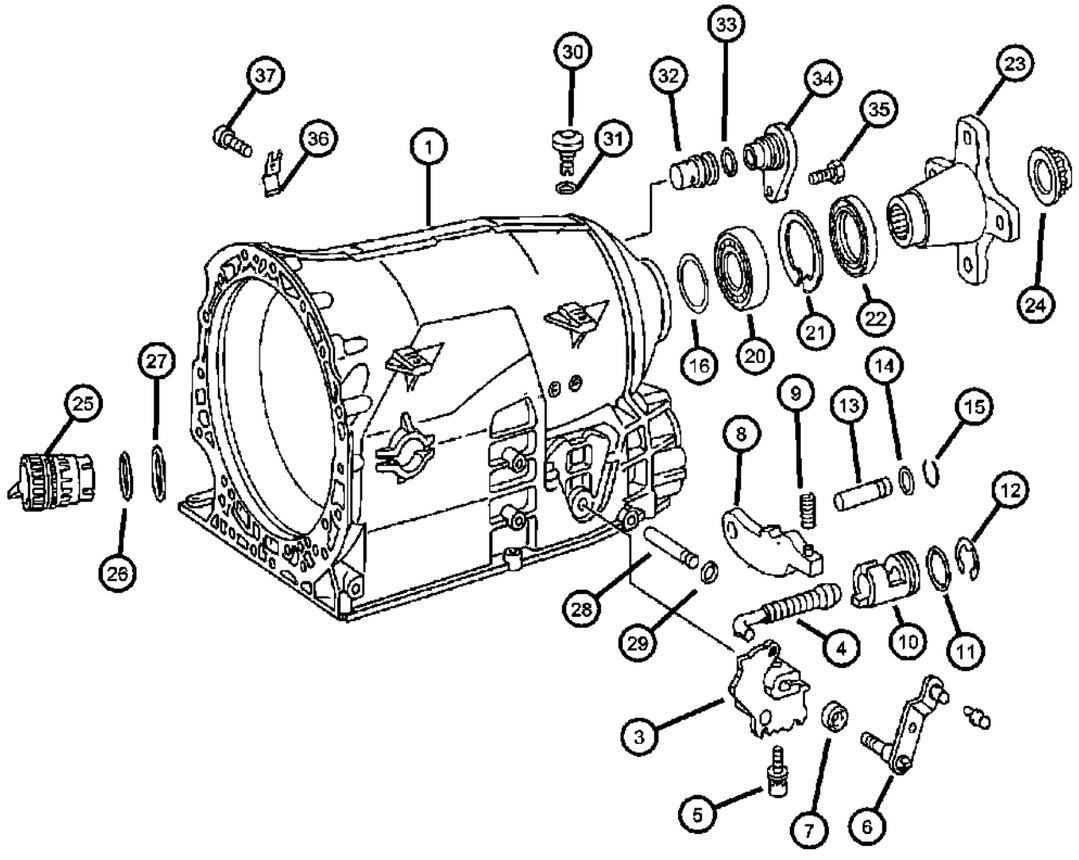

ITEM	PART NUMBER	QTY	LINE	SERIES	BODY	ENGINE	TRANS	TRIM	DESCRIPTION
NOTE:									
Sales Code:									
[DGZ]=5 Speed Automatic Transmission - [W5A380]									
[EGZ]=3.5L V-6 Gas Engine [Mercedes Benz]									
[EXM]=3.0L Turbo Diesel Engine [Mercedes Benz]									
1	05117849AA	1	2, 3, 6, 7	L		EG2, EXM	DGZ		HOUSING, Transmission
-2	68004976AA	2	2, 3, 6, 7	L		EG2, EXM	DGZ		FITTING, Transmission Cooler Lines
3	05099886AA	1	2, 3, 6, 7	L		EG2, EXM	DGZ		DETENT, Gearshift
4	52108166AA	1	2, 3, 6, 7	L		EG2, EXM	DGZ		LINKAGE, Transmission
5	52108178AA	1	2, 3, 6, 7	L		EG2, EXM	DGZ		SCREW
6	05138569AA	1	2, 3, 6, 7	L		EG2, EXM	DGZ		LEVER, Gearshift
7	52108170AA	1	2, 3, 6, 7	L		EG2, EXM	DGZ		SEAL, Transmission
8	52108154AA	1	2, 3, 6, 7	L		EG2, EXM	DGZ		PAWL, Parking Sprag
9	52108157AA	1	2, 3, 6, 7	L		EG2, EXM	DGZ		SPRING
10	52108176AA	1	2, 3, 6, 7	L		EG2, EXM	DGZ		GUIDE
11	52108177AA	1	2, 3, 6, 7	L		EG2, EXM	DGZ		SEAL, Transmission
12	52107976AA	1	2, 3, 6, 7	L		EG2, EXM	DGZ		SNAP RING
13	52108155AA	1	2, 3, 6, 7	L		EG2, EXM	DGZ		PIN
14	52108156AA	1	2, 3, 6, 7	L		EG2, EXM	DGZ		SEAL, Transmission
15	52107975AA	1	2, 3, 6, 7	L		EG2, EXM	DGZ		SNAP RING
16	52108230AA	AR	2, 3, 6, 7	L		EG2, EXM	DGZ		SHIM, Park & output bearing, 0.20mm
-17	52108220AA	AR	2, 3, 6, 7	L		EG2, EXM	DGZ		SHIM, Park & output bearing, 0.30mm
-18	52108231AA	AR	2, 3, 6, 7	L		EG2, EXM	DGZ		SHIM, Park & output bearing, 0.40mm
-19	52108232AA	AR	2, 3, 6, 7	L		EG2, EXM	DGZ		SHIM, Park & output bearing, 0.50mm
20	52108207AA	1	2, 3, 6, 7	L		EG2, EXM	DGZ		BEARING, Ball
21	52108208AA	1	2, 3, 6, 7	L		EG2, EXM	DGZ		LOCK, Mounting
22	52108428AA	1	2, 3, 6, 7	L		EG2, EXM	DGZ		SEAL, Transmission
23	05161908AA	1	2, 3, 6, 7	L		EG2, EXM	DGZ		FLANGE, Drive Shaft
24	52108234AA	1	2, 3, 6, 7	L		EG2, EXM	DGZ		NUT
25	05189122AA	1	2, 3, 6, 7	L		EG2, EXM	DGZ		PLUG, Adapter
26	68001278AA	1	2, 3, 6, 7	L		EG2, EXM	DGZ		O RING, Adapter Plug, [36.1x3.4]

SPRINTER (VB)

SERIES	LINE	BODY	ENGINE	TRANSMISSION
L = LOWLINE	3 = HD DODGE 2WD 2 = Med. Duty DODGE 2WD	03 = CAB CHASSIS WHEEL BASE 3 05 = CAB CHASSIS WHEEL BASE 5 13 = 119 WB 53 = 119 WB 15 = VAN WHEEL BASE 5 55 = WAGON WHEEL BASE 5 17 = VAN WHEEL BASE 7	EG2 = 3.5L V6 Gas Engine EXM = 3.0L V6 Turbo Diesel Engine	DGZ = 5-Speed Auto W5A380 Transmission

AR = use ase required - = Non illustrrated part

<< RETURN TO GROUP INDEX

Transmission Case, Rear
Figure NAG1-220

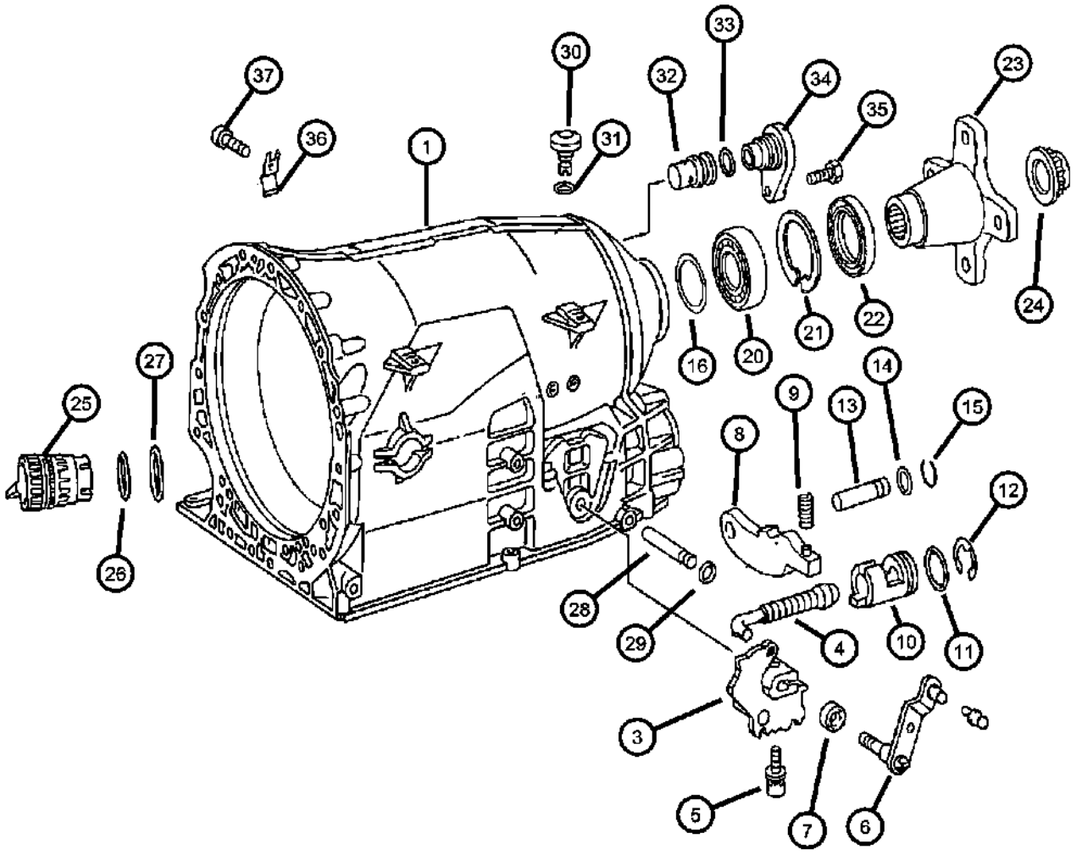

ITEM	PART NUMBER	QTY	LINE	SERIES	BODY	ENGINE	TRANS	TRIM	DESCRIPTION
27	68001279AA	1	2, 3, 6, 7	L		EG2, EXM	DGZ		O RING, Adapter Plug, [31.0x2.8]
28	52108159AA	1	2, 3, 6, 7	L		EG2, EXM	DGZ		PIN
29	52108160AA	1	2, 3, 6, 7	L		EG2, EXM	DGZ		SEAL, Transmission
30	52108364AA	1	2, 3, 6, 7	L		EG2, EXM	DGZ		BREATHER, Transmission
31	52108367AA	1	2, 3, 6, 7	L		EG2, EXM	DGZ		SEAL, Transmission
32	05117853AA	1	2, 3, 6, 7	L		EG2, EXM	DGZ		RETAINER
33	05125908AA	1	2, 3, 6, 7	L		EG2, EXM	DGZ		O RING, Sensor
34	05117839AA	1	2, 3, 6, 7	L		EG2, EXM	DGZ		CAP, Oil Filler
35	04862644AA	1	2, 3, 6, 7	L		EG2, EXM	DGZ		SCREW, [M6x18]
36	52108179AA	1	2, 3, 6, 7	L		EG2, EXM	DGZ		SPRING
37	52108161AA	1	2, 3, 6, 7	L		EG2, EXM	DGZ		SCREW

SPRINTER (VB)

SERIES	LINE	BODY	ENGINE	TRANSMISSION
L = LOWLINE	3 = HD DODGE 2WD 2 = Med. Duty DODGE 2WD	03 = CAB CHASSIS WHEEL BASE 3 05 = CAB CHASSIS WHEEL BASE 5 13 = 119 WB 53 = 119 WB 15 = VAN WHEEL BASE 5 55 = WAGON WHEEL BASE 5 17 = VAN WHEEL BASE 7	EG2 = 3.5L V6 Gas Engine EXM = 3.0L V6 Turbo Diesel Engine	DGZ = 5-Speed Auto W5A380 Transmission

Oil Filler Tube & Related Parts
Figure NAG1-230

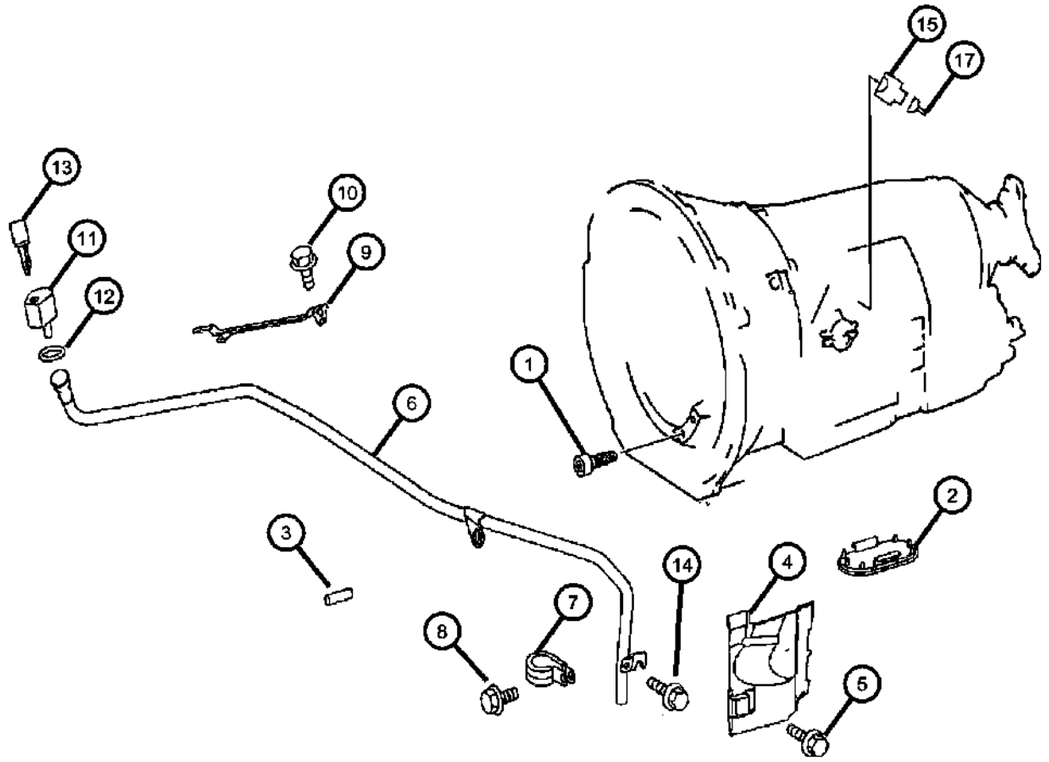

ITEM	PART NUMBER	QTY	LINE	SERIES	BODY	ENGINE	TRANS	TRIM	DESCRIPTION
NOTE:									
Sales Code:									
[DGZ]=5 Speed Automatic Transmission - [W5A380]									
[EGZ]=3.5L V-6 Gas Engine [Mercedes Benz]									
[EXM]=3.0L Turbo Diesel Engine [Mercedes Benz]									
1									SCREW
	05137660AA	2	2, 3, 6, 7	L		EG2	DGZ		Intermediate Flange To Transmission Case [M8x80]
	05191821AA	6	2, 3, 6, 7	L		EG2, EXM	DGZ		Flywheel To Torque Converter [M10x31]
	06104024AA	8	3, 7	L		EG2, EXM	DGZ		Intermediate Flange To Transmission Case [M8x25]
		8	2, 3, 6, 7	L		EG2, EXM	DGZ		Intermediate Flange To Transmission Case [M8x25]
2	68013686AA	1	2, 3, 6, 7	L		EG2, EXM	DGZ		COVER, Converter Cover At Bell Housing
3	05080447AA	1	2, 3, 6, 7	L		EG2, EXM	DGZ		PIN, Transmission To Engine Block
4	53013508AA	1	2, 3, 6, 7	L		EG2	DGZ		SHIELD, Heat
5									SCREW
	06104681AA	1	3, 7	L		EG2, EXM	DGZ		
		1	2, 6	L		EG2, EXM	DGZ		
6									TUBE
	68013687AA	1	2, 3, 6, 7	L		EG2	DGZ		
	68013688AA	1	2, 3, 6, 7	L		EXM	DGZ		
7									CLAMP, Tube Retaining
	05073938AB	2	3, 7	L		EG2	DGZ		
		2	2, 6	L		EG2	DGZ		
8	06104076AA	2	2, 3, 6, 7	L		EG2, EXM	DGZ		SCREW
9	68013689AA	1	2, 3, 6, 7	L		EG2	DGZ		BRACKET
10	06104076AA	2	2, 3, 6, 7	L		EXM	DGZ		SCREW
11									CAP, Oil Filler
	53013549AA	1	3, 7	L		EG2, EXM	DGZ		
		1	2, 3, 6, 7	L		EG2, EXM	DGZ		
12									SEAL, Oil Filler Tube
	05101154AA	1	3, 7	L		EG2, EXM	DGZ		
		1	2, 3, 6, 7	L		EG2, EXM	DGZ		

SPRINTER (VB)

SERIES	LINE	BODY	ENGINE	TRANSMISSION
L = LOWLINE	3 = HD DODGE 2WD 2 = Med. Duty DODGE 2WD	03 = CAB CHASSIS WHEEL BASE 3 05 = CAB CHASSIS WHEEL BASE 5 13 = 119 WB 53 = 119 WB 15 = VAN WHEEL BASE 5 55 = WAGON WHEEL BASE 5 17 = VAN WHEEL BASE 7	EG2 = 3.5L V6 Gas Engine EXM = 3.0L V6 Turbo Diesel Engine	DGZ = 5-Speed Auto W5A380 Transmission

Oil Filler Tube & Related Parts
Figure NAG1-230

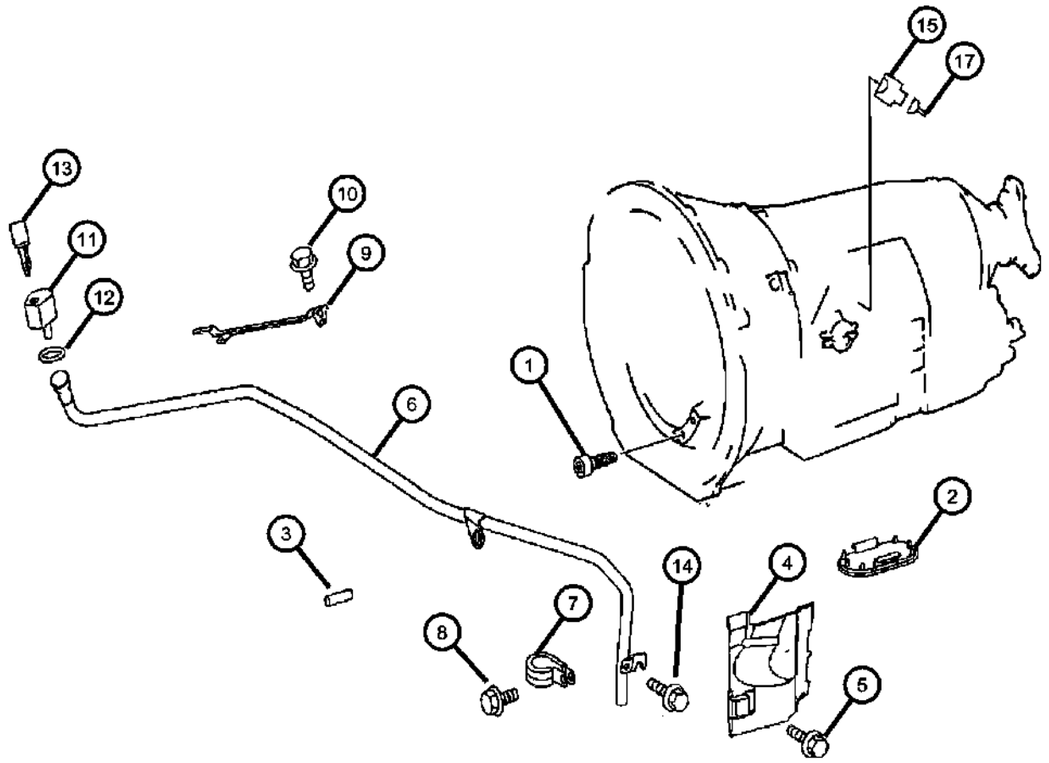

ITEM	PART NUMBER	QTY	LINE	SERIES	BODY	ENGINE	TRANS	TRIM	DESCRIPTION
13									PIN
	05093746AA	1	3, 7	L		EG2, EXM	DGZ		
		1	2, 3, 6, 7	L		EG2, EXM	DGZ		
14									SCREW
	06104681AA	1	3, 7	L		EG2, EXM	DGZ		
		1	2, 3, 6, 7	L		EG2, EXM	DGZ		
15	05120265AA	1	2, 3, 6, 7	L		EXM, EG2	DGZ		CONNECTOR, [A62 / 12PIN]
-16	05120884AA	1	2, 3, 6, 7	L		EG2, EXM	DGZ		CAP, [A62]
17	05103882AA	1	2, 3, 6, 7	L					TERMINAL, [A62] Contact [0.5-1.0MM 2/JPT]

SPRINTER (VB)

SERIES	LINE	BODY	ENGINE	TRANSMISSION
L = LOWLINE	3 = HD DODGE 2WD 2 = Med. Duty DODGE 2WD	03 = CAB CHASSIS WHEEL BASE 3 05 = CAB CHASSIS WHEEL BASE 5 13 = 119 WB 53 = 119 WB 15 = VAN WHEEL BASE 5 55 = WAGON WHEEL BASE 5 17 = VAN WHEEL BASE 7	EG2 = 3.5L V6 Gas Engine EXM = 3.0L V6 Turbo Diesel Engine	DGZ = 5-Speed Auto W5A380 Transmission

Oil Pump
Figure NAG1-310

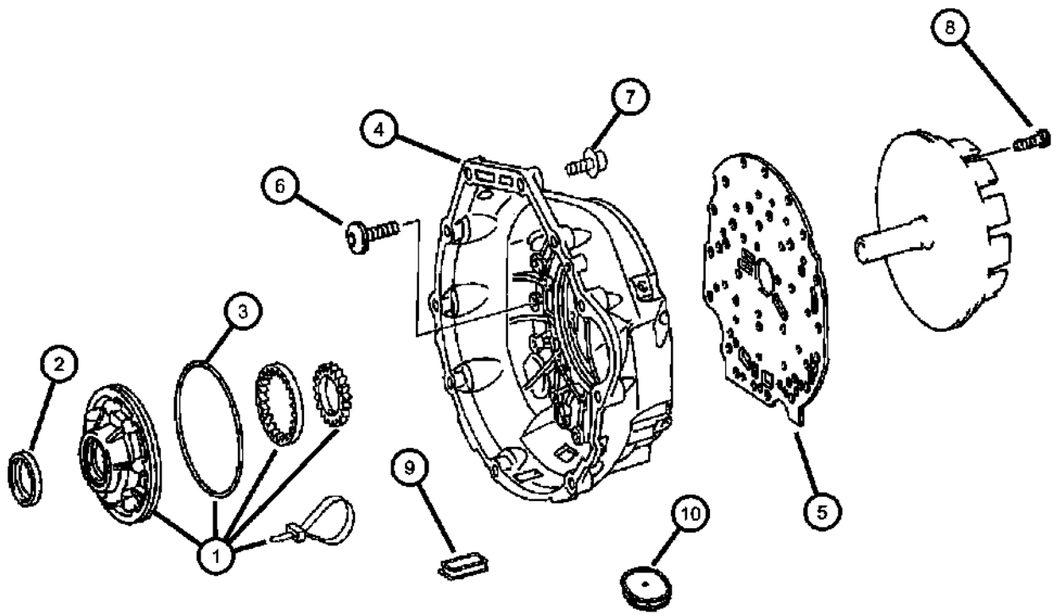

ITEM	PART NUMBER	QTY	LINE	SERIES	BODY	ENGINE	TRANS	TRIM	DESCRIPTION
NOTE:									
Sales Code:									
[DGZ]=5 Speed Automatic Transmission - [W5A380]									
[EGZ]=3.5L V-6 Gas Engine [Mercedes Benz]									
[EXM]=3.0L Turbo Diesel Engine [Mercedes Benz]									
1	05080070AA	1	2, 3, 6, 7	L		EG2, EXM	DGZ		PUMP, Transmission Oil
2	52108424AA	1	2, 3, 6, 7	L		EG2, EXM	DGZ		SEAL
3	52107900AA	1	2, 3, 6, 7	L		EG2, EXM	DGZ		O RING
4	05161462AA	1	2, 3, 6, 7	L		EG2, EXM	DGZ		HOUSING, Torque Converter
5	52108147AA	1	2, 3, 6, 7	L		EG2, EXM	DGZ		PLATE, Intermediate
6									SCREW
	06104158AA	2	2, 3, 6, 7	L		EG2, EXM	DGZ		[M8x40]
	52108206AA	15	2, 3, 6, 7	L		EG2, EXM	DGZ		Bell Housing To Transmission Case [M8x40]
7	52107934AA	11	2, 3, 6, 7	L		EG2, EXM	DGZ		SCREW, Transmission To Engine Block
8	52107933AA	7	2, 3, 6, 7	L		EG2, EXM	DGZ		SCREW, Intermediate Plate & Disc Support To Bell Housing
9	05073886AA	2	2, 3, 6, 7	L		EG2, EXM	DGZ		GASKET, Converter Housing Cover
10	53013767AA	1	2, 3, 6, 7	L		EG2, EXM	DGZ		GASKET, Converter Housing Cover

SPRINTER (VB)

SERIES	LINE	BODY	ENGINE	TRANSMISSION
L = LOWLINE	3 = HD DODGE 2WD 2 = Med. Duty DODGE 2WD	03 = CAB CHASSIS WHEEL BASE 3 05 = CAB CHASSIS WHEEL BASE 5 13 = 119 WB 53 = 119 WB 15 = VAN WHEEL BASE 5 55 = WAGON WHEEL BASE 5 17 = VAN WHEEL BASE 7	EG2 = 3.5L V6 Gas Engine EXM = 3.0L V6 Turbo Diesel Engine	DGZ = 5-Speed Auto W5A380 Transmission

Laminated Brake / [B1]
Figure NAG1-410

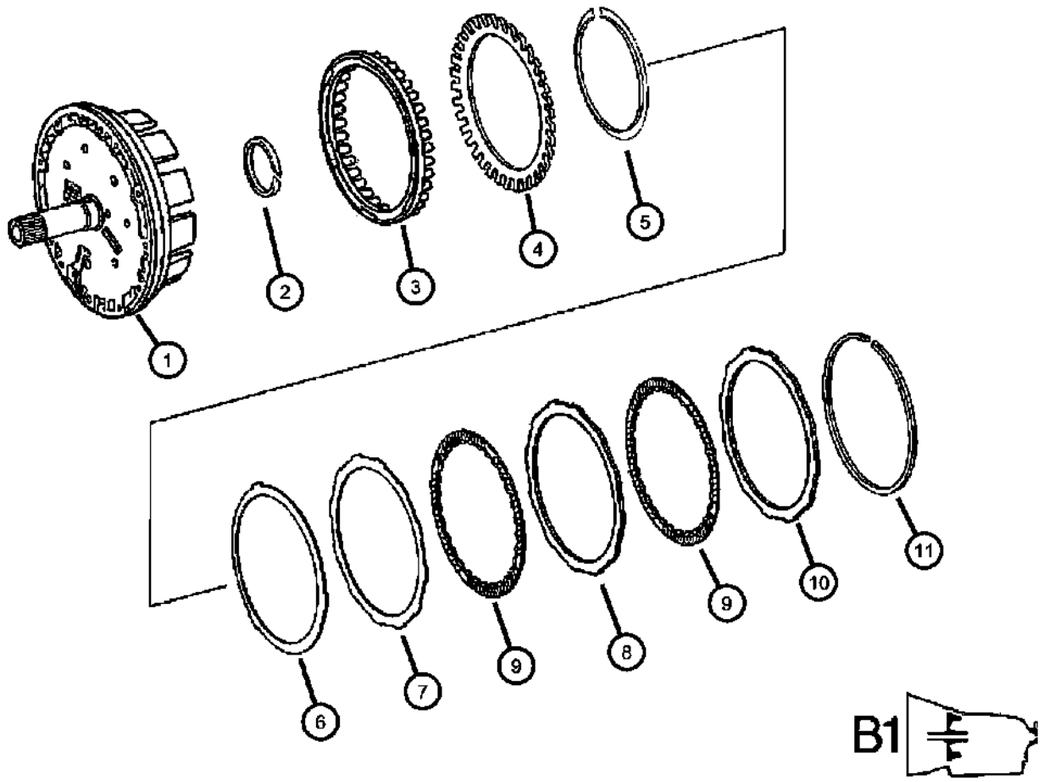

ITEM	PART NUMBER	QTY	LINE	SERIES	BODY	ENGINE	TRANS	TRIM	DESCRIPTION
NOTE:									
Sales Code:									
[DGZ]=5 Speed Automatic Transmission - [W5A380]									
[EGZ]=3.5L V-6 Gas Engine [Mercedes Benz]									
[EXM]=3.0L Turbo Diesel Engine [Mercedes Benz]									
1									HOLDING CLUTCH, Outer carrier, B1
	05138365AA	1	2, 3, 6, 7	L		EG2	DGZ		
	52108539AC	1	2, 3, 6, 7	L		EXM	DGZ		
2	52108028AA	2	2, 3, 6, 7	L		EG2, EXM	DGZ		SEAL, Transmission
3	52108506AA	1	2, 3, 6, 7	L		EG2, EXM	DGZ		PISTON
4	52108023AA	1	2, 3, 6, 7	L		EG2, EXM	DGZ		DISC, Spring
5	52107936AA	1	2, 3, 6, 7	L		EG2, EXM	DGZ		SNAP RING
6	52108024AA	1	2, 3, 6, 7	L		EG2, EXM	DGZ		DISC, Spring
7	52107992AA	1	2, 3, 6, 7	L		EG2, EXM	DGZ		DISC, Outer, [1.8MM]
8	52108508AA	4	2, 3, 6, 7	L		EXM, EG2	DGZ		DISC, Outer, [2.07MM]
9	52108507AA	4	2, 3, 6, 7	L		EG2, EXM	DGZ		DISC, Inner
10	52107994AA	1	2, 3, 6, 7	L		EG2, EXM	DGZ		DISC, Outer, [4.0MM]
11									SNAP RING
	52107949AA	AR	2, 3, 6, 7	L		EG2, EXM	DGZ		[2.6MM]
	52107950AA	AR	2, 3, 6, 7	L		EG2, EXM	DGZ		[2.9MM]
	52107951AA	AR	3, 6, 7, 2	L		EG2, EXM	DGZ		[3.2MM]
	52107952AA	AR	2, 3, 6, 7	L		EG2, EXM	DGZ		[3.5MM]

SPRINTER (VB)

SERIES	LINE	BODY	ENGINE	TRANSMISSION
L = LOWLINE	3 = HD DODGE 2WD 2 = Med. Duty DODGE 2WD	03 = CAB CHASSIS WHEEL BASE 3 05 = CAB CHASSIS WHEEL BASE 5 13 = 119 WB 53 = 119 WB 15 = VAN WHEEL BASE 5 55 = WAGON WHEEL BASE 5 17 = VAN WHEEL BASE 7	EG2 = 3.5L V6 Gas Engine EXM = 3.0L V6 Turbo Diesel Engine	DGZ = 5-Speed Auto W5A380 Transmission

Front Planetary Gear Train, Clutch / [K1]
Figure NAG1-420

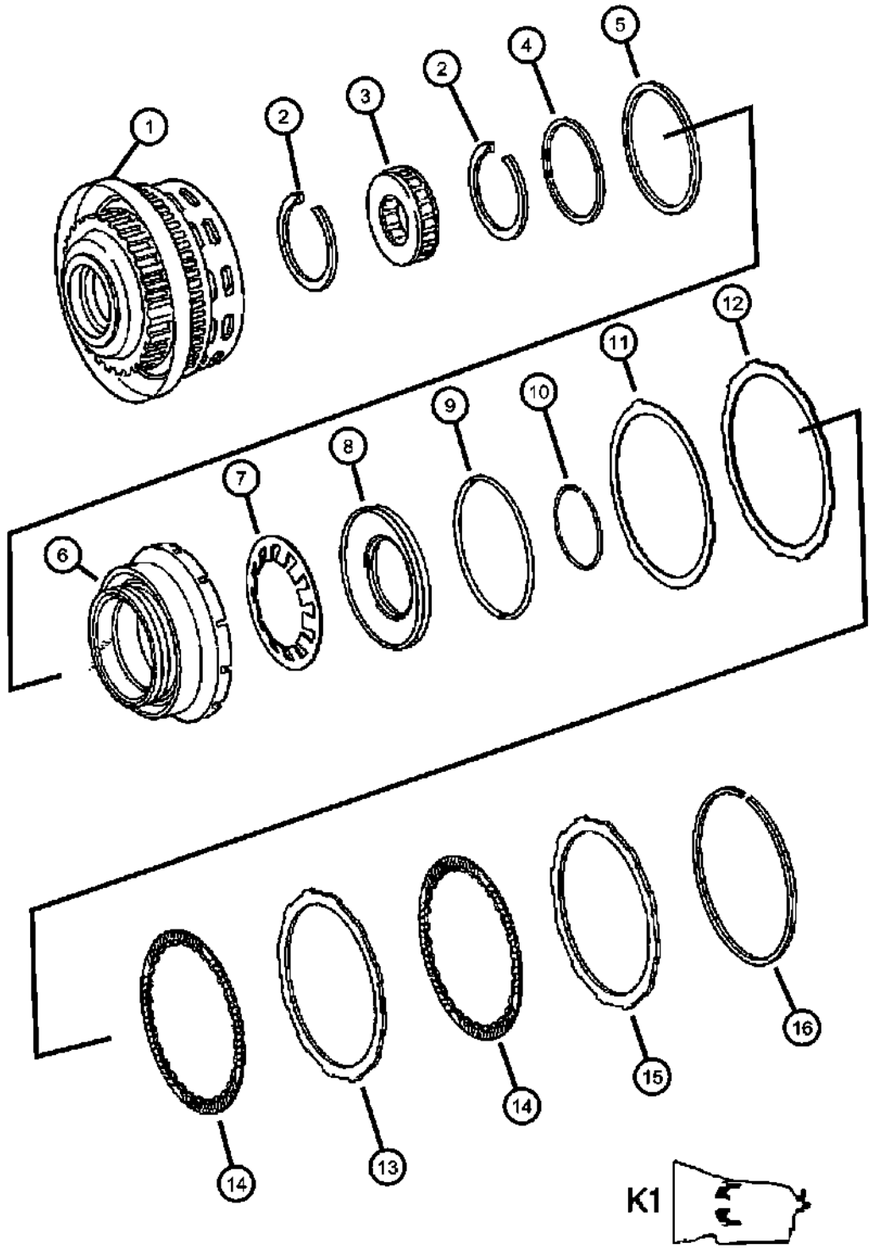

ITEM	PART NUMBER	QTY	LINE	SERIES	BODY	ENGINE	TRANS	TRIM	DESCRIPTION
NOTE:									
Sales Code:									
[DGZ]=5 Speed Automatic Transmission - [W5A380]									
[EGZ]=3.5L V-6 Gas Engine [Mercedes Benz]									
[EXM]=3.0L Turbo Diesel Engine [Mercedes Benz]									
1									DISC, Support
	05183859AA	1	2, 3, 6, 7	L		EXM	DGZ		
	05183860AA	1	2, 3, 6, 7	L		EG2	DGZ		
2	52107955AA	2	2, 3, 6, 7	L		EG2, EXM	DGZ		SNAP RING
3	52108342AB	1	2, 3, 6, 7	L		EG2, EXM	DGZ		CLUTCH, Front Sun Gear Sprag, Freewheel Unit
4	52107938AA	1	2, 3, 6, 7	L		EG2, EXM	DGZ		SEAL, Transmission
5	52107939AA	1	2, 3, 6, 7	L		EG2, EXM	DGZ		SEAL, Transmission
6	52108059AA	1	2, 3, 6, 7	L		EG2, EXM	DGZ		PISTON
7	52108057AA	1	2, 3, 6, 7	L		EG2, EXM	DGZ		DISC, Spring
8	52108058AA	1	2, 3, 6, 7	L		EG2, EXM	DGZ		SPRING, Retainer
9	52107941AA	1	2, 3, 6, 7	L		EG2, EXM	DGZ		SEAL, Transmission
10	52107954AA	1	2, 3, 6, 7	L		EG2, EXM	DGZ		SNAP RING
11	52108024AA	1	2, 3, 6, 7	L		EG2, EXM	DGZ		DISC, Spring
12	52107992AA	1	2, 3, 6, 7	L		EXM, EG2	DGZ		DISC, Outer, [1.8MM]
13	52108508AA	4	2, 3, 6, 7	L		EG2, EXM	DGZ		DISC, Outer, [2.07MM]
14	52108507AA	4	2, 3, 6, 7	L		EG2, EXM	DGZ		DISC, Inner
15	52107994AA	1	2, 3, 6, 7	L		EG2, EXM	DGZ		DISC, Outer, [4.0MM]
16									SNAP RING
	52107949AA	AR	2, 3, 6, 7	L		EG2, EXM	DGZ		[2.6MM]
	52107950AA	AR	2, 3, 6, 7	L		EG2, EXM	DGZ		[2.9MM]
	52107951AA	AR	2, 3, 6, 7	L		EG2, EXM	DGZ		[3.2MM]
	52107952AA	AR	2, 3, 6, 7	L		EG2, EXM	DGZ		[3.5MM]
	52108373AA	AR	2, 3, 6, 7	L		EG2, EXM	DGZ		[3.8MM]

SPRINTER (VB)

SERIES	LINE	BODY	ENGINE	TRANSMISSION
L = LOWLINE	3 = HD DODGE 2WD 2 = Med. Duty DODGE 2WD	03 = CAB CHASSIS WHEEL BASE 3 05 = CAB CHASSIS WHEEL BASE 5 13 = 119 WB 53 = 119 WB 15 = VAN WHEEL BASE 5 55 = WAGON WHEEL BASE 5 17 = VAN WHEEL BASE 7	EG2 = 3.5L V6 Gas Engine EXM = 3.0L V6 Turbo Diesel Engine	DGZ = 5-Speed Auto W5A380 Transmission

AR = use ase required - = Non illustrrated part

<< RETURN TO GROUP INDEX

Front Planetary Gear Train / [K1]
Figure NAG1-430

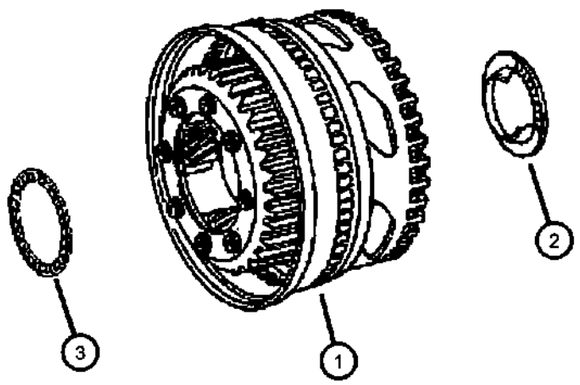

ITEM	PART NUMBER	QTY	LINE	SERIES	BODY	ENGINE	TRANS	TRIM	DESCRIPTION
NOTE:									
Sales Code:									
[DGZ]=5 Speed Automatic Transmission - [W5A380]									
[EGZ]=3.5L V-6 Gas Engine [Mercedes Benz]									
[EXM]=3.0L Turbo Diesel Engine [Mercedes Benz]									
1	52108513AA	1	2, 3, 6, 7	L		EG2, EXM	DGZ		CARRIER, Planetary
2	52108123AA	1	2, 3, 6, 7	L		EG2, EXM	DGZ		NEEDLE BEARING
3	52108122AA	1	2, 3, 6, 7	L		EG2, EXM	DGZ		NEEDLE BEARING



SPRINTER (VB)

SERIES	LINE	BODY	ENGINE	TRANSMISSION
L = LOWLINE	3 = HD DODGE 2WD 2 = Med. Duty DODGE 2WD	03 = CAB CHASSIS WHEEL BASE 3 05 = CAB CHASSIS WHEEL BASE 5 13 = 119 WB 53 = 119 WB 15 = VAN WHEEL BASE 5 55 = WAGON WHEEL BASE 5 17 = VAN WHEEL BASE 7	EG2 = 3.5L V6 Gas Engine EXM = 3.0L V6 Turbo Diesel Engine	DGZ = 5-Speed Auto W5A380 Transmission

Clutch / [K2] Output Shaft
Figure NAG1-440

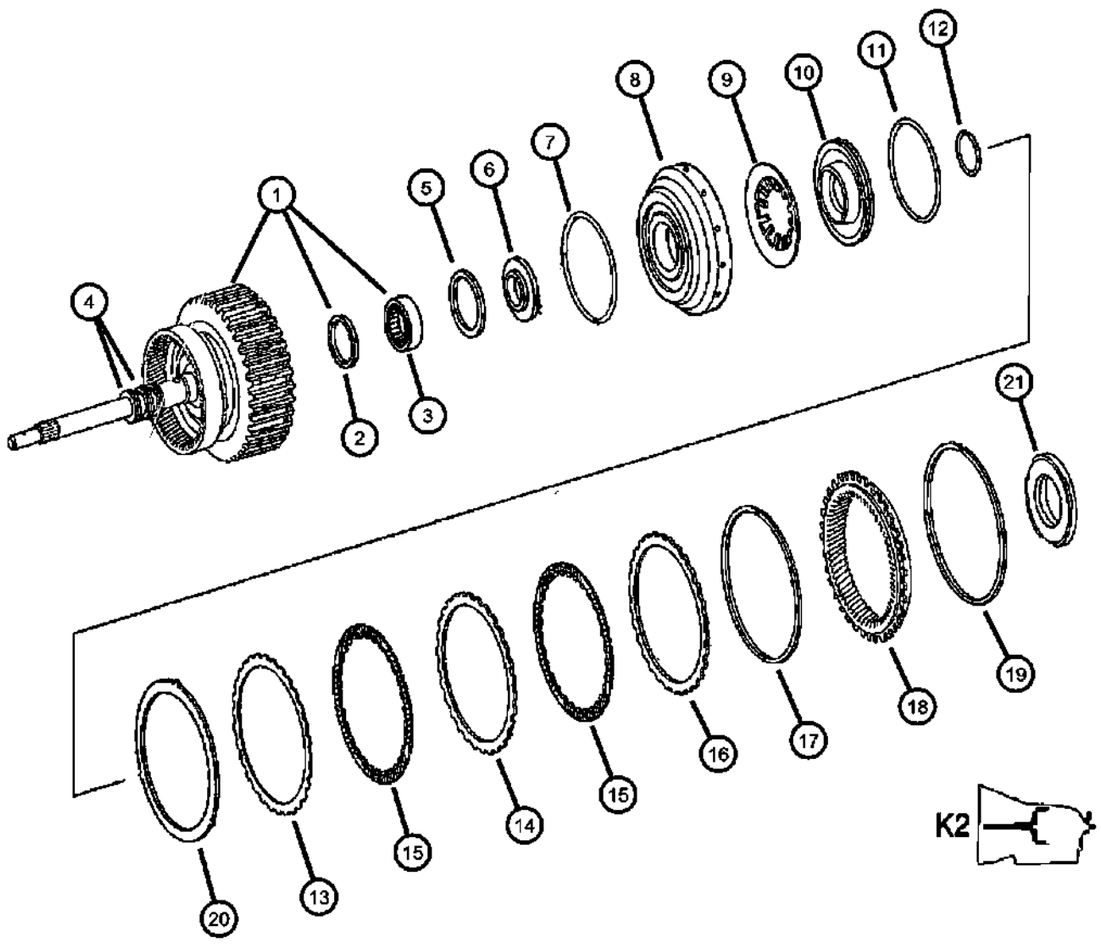

ITEM	PART NUMBER	QTY	LINE	SERIES	BODY	ENGINE	TRANS	TRIM	DESCRIPTION
NOTE:									
Sales Code:									
[DGZ]=5 Speed Automatic Transmission - [W5A380]									
[EGZ]=3.5L V-6 Gas Engine [Mercedes Benz]									
[EXM]=3.0L Turbo Diesel Engine [Mercedes Benz]									
1	52108044AA	1	2, 3, 6, 7	L		EG2, EXM	DGZ		SHAFT, Input
2	52108127AA	1	2, 3, 6, 7	L		EG2, EXM	DGZ		SEAL, Transmission
3	52108126AA	1	2, 3, 6, 7	L		EG2, EXM	DGZ		NEEDLE BEARING
4	05179366AA	3	2, 3, 6, 7	L		EG2, EXM	DGZ		SEAL, Transmission
5	52108134AA	1	2, 3, 6, 7	L		EG2, EXM	DGZ		SEAL, Transmission
6	52107928AA	1	2, 3, 6, 7	L		EG2, EXM	DGZ		PLATE
7	52108135AA	1	2, 3, 6, 7	L		EG2, EXM	DGZ		SEAL, Input Shaft
8									PISTON
	52108136AA	1	2, 3, 6, 7	L		EXM	DGZ		
	52108517AA	1	2, 3, 6, 7	L		EG2	DGZ		
9	52108137AA	1	2, 3, 6, 7	L		EG2, EXM	DGZ		DISC, Spring
10	52108138AB	1	2, 3, 6, 7	L		EG2, EXM	DGZ		SPRING, Retainer
11	52108140AA	1	2, 3, 6, 7	L		EG2, EXM	DGZ		SEAL, Transmission
12	52107970AA	AR	2, 3, 6, 7	L		EG2, EXM	DGZ		SNAP RING
13	52107996AA	1	2, 3, 6, 7	L		EG2, EXM	DGZ		DISC, Outer, [1.8MM]
14	05174859AA	5	2, 3, 6, 7	L		EG2, EXM	DGZ		DISC, Outer, [2.8MM]
15	52108141AB	6	2, 3, 6, 7	L		EG2, EXM	DGZ		DISC, Inner
16	05174860AA	1	2, 3, 6, 7	L		EG2, EXM	DGZ		DISC, Outer, [4.0MM]
17									SNAP RING
	52107958AA	1	2, 3, 6, 7	L		EG2, EXM	DGZ		[2.3MM]
	52107959AA	1	2, 3, 6, 7	L		EG2, EXM	DGZ		[2.6MM]
	52107960AA	1	2, 3, 6, 7	L		EG2, EXM	DGZ		[2.9MM]
	52107961AA	1	2, 3, 6, 7	L		EG2, EXM	DGZ		[3.2MM]
	52107962AA	1	2, 3, 6, 7	L		EG2, EXM	DGZ		[3.5MM]
18	52107922AA	1	2, 3, 6, 7	L		EG2, EXM	DGZ		GEAR, Rear Annulus
19	52107926AA	1	2, 3, 6, 7	L		EG2, EXM	DGZ		SNAP RING
20	52108346AA	1	2, 3, 6, 7	L		EG2, EXM	DGZ		DISC, Spring
21	52107927AA	1	2, 3, 6, 7	L		EG2, EXM	DGZ		NEEDLE BEARING

SPRINTER (VB)

SERIES	LINE	BODY	ENGINE	TRANSMISSION
L = LOWLINE	3 = HD DODGE 2WD 2 = Med. Duty DODGE 2WD	03 = CAB CHASSIS WHEEL BASE 3 05 = CAB CHASSIS WHEEL BASE 5 13 = 119 WB 53 = 119 WB 15 = VAN WHEEL BASE 5 55 = WAGON WHEEL BASE 5 17 = VAN WHEEL BASE 7	EG2 = 3.5L V6 Gas Engine EXM = 3.0L V6 Turbo Diesel Engine	DGZ = 5-Speed Auto W5A380 Transmission

AR = use ase required - = Non illustrrated part

<< RETURN TO GROUP INDEX

Center Planetary Set / Output Shaft / [MPLS/HPLS]
Figure NAG1-450

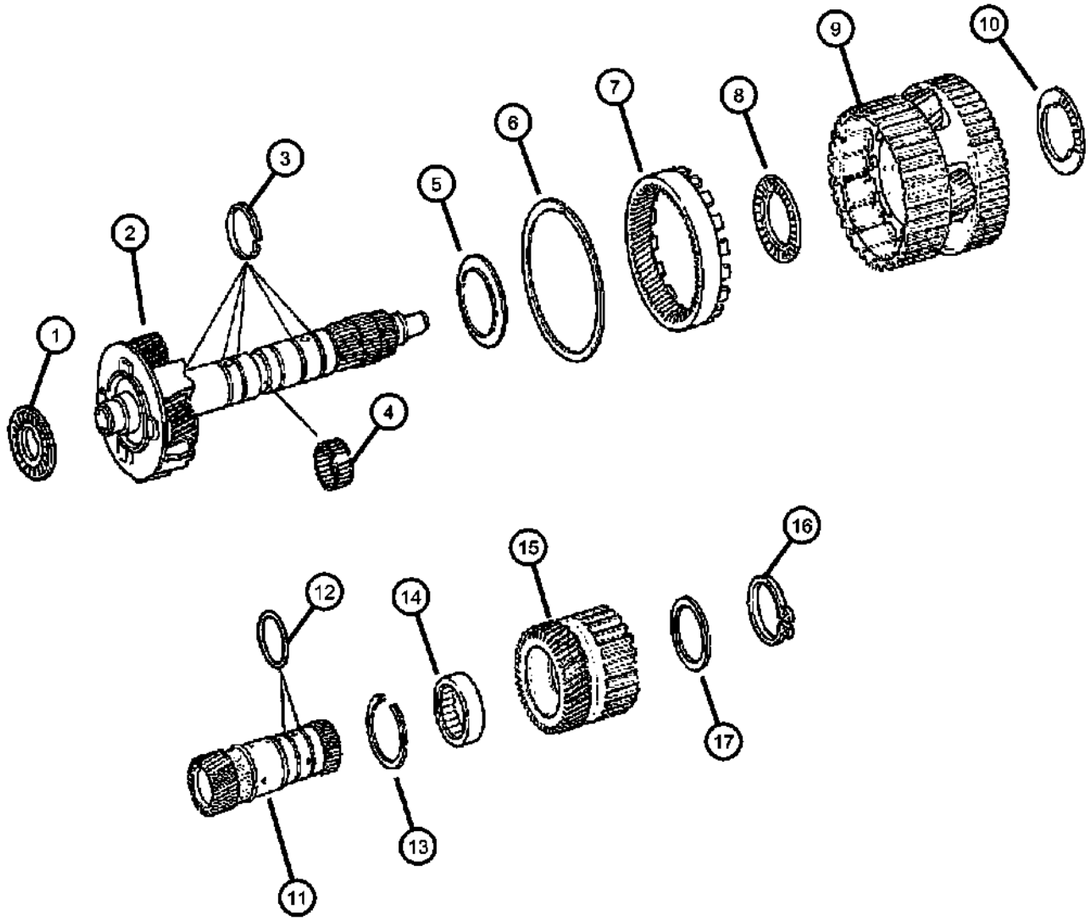

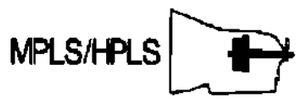

ITEM	PART NUMBER	QTY	LINE	SERIES	BODY	ENGINE	TRANS	TRIM	DESCRIPTION
NOTE:									
Sales Code:									
[DGZ]=5 Speed Automatic Transmission - [W5A380]									
[EGZ]=3.5L V-6 Gas Engine [Mercedes Benz]									
[EXM]=3.0L Turbo Diesel Engine [Mercedes Benz]									
1	52107927AA	1	2, 3, 6, 7	L		EG2, EXM	DGZ		NEEDLE BEARING
2	52107929AA	1	2, 3, 6, 7	L		EG2, EXM	DGZ		SHAFT, Output
3	05179367AA	5	2, 3, 6, 7	L		EG2, EXM	DGZ		SEAL, Transmission
4	52108069AA	1	2, 3, 6, 7	L		EG2, EXM	DGZ		NEEDLE BEARING
5	52108070AA	1	2, 3, 6, 7	L		EG2, EXM	DGZ		PLATE
6	52108374AA	1	2, 3, 6, 7	L		EG2, EXM	DGZ		SNAP RING
7	52108376AA	1	2, 3, 6, 7	L		EG2, EXM	DGZ		GEAR, Annulus
8	52107931AA	1	2, 3, 6, 7	L		EG2, EXM	DGZ		NEEDLE BEARING
9	52108072AA	1	2, 3, 6, 7	L		EG2, EXM	DGZ		CARRIER, Planetary
10	52107932AA	1	2, 3, 6, 7	L		EG2, EXM	DGZ		NEEDLE BEARING
11	52108078AA	1	2, 3, 6, 7	L		EG2, EXM	DGZ		GEAR, Sun
12	52108085AA	2	2, 3, 6, 7	L		EG2, EXM	DGZ		SEAL, Transmission
13	52107966AA	1	2, 3, 6, 7	L		EG2, EXM	DGZ		SNAP RING
14	52108522AA	1	2, 3, 6, 7	L		EG2, EXM	DGZ		BEARING, Output Shaft, Freewheel Unit
15	52108519AA	1	2, 3, 6, 7	L		EG2, EXM	DGZ		GEAR, Sun
16	52107967AA	1	2, 3, 6, 7	L		EG2, EXM	DGZ		SNAP RING
17	52108379AA	1	2, 3, 6, 7	L		EG2, EXM	DGZ		SPACER

SPRINTER (VB)

SERIES	LINE	BODY	ENGINE	TRANSMISSION
L = LOWLINE	3 = HD DODGE 2WD 2 = Med. Duty DODGE 2WD	03 = CAB CHASSIS WHEEL BASE 3 05 = CAB CHASSIS WHEEL BASE 5 13 = 119 WB 53 = 119 WB 15 = VAN WHEEL BASE 5 55 = WAGON WHEEL BASE 5 17 = VAN WHEEL BASE 7	EG2 = 3.5L V6 Gas Engine EXM = 3.0L V6 Turbo Diesel Engine	DGZ = 5-Speed Auto W5A380 Transmission

Clutch / [K3]
Figure NAG1-460

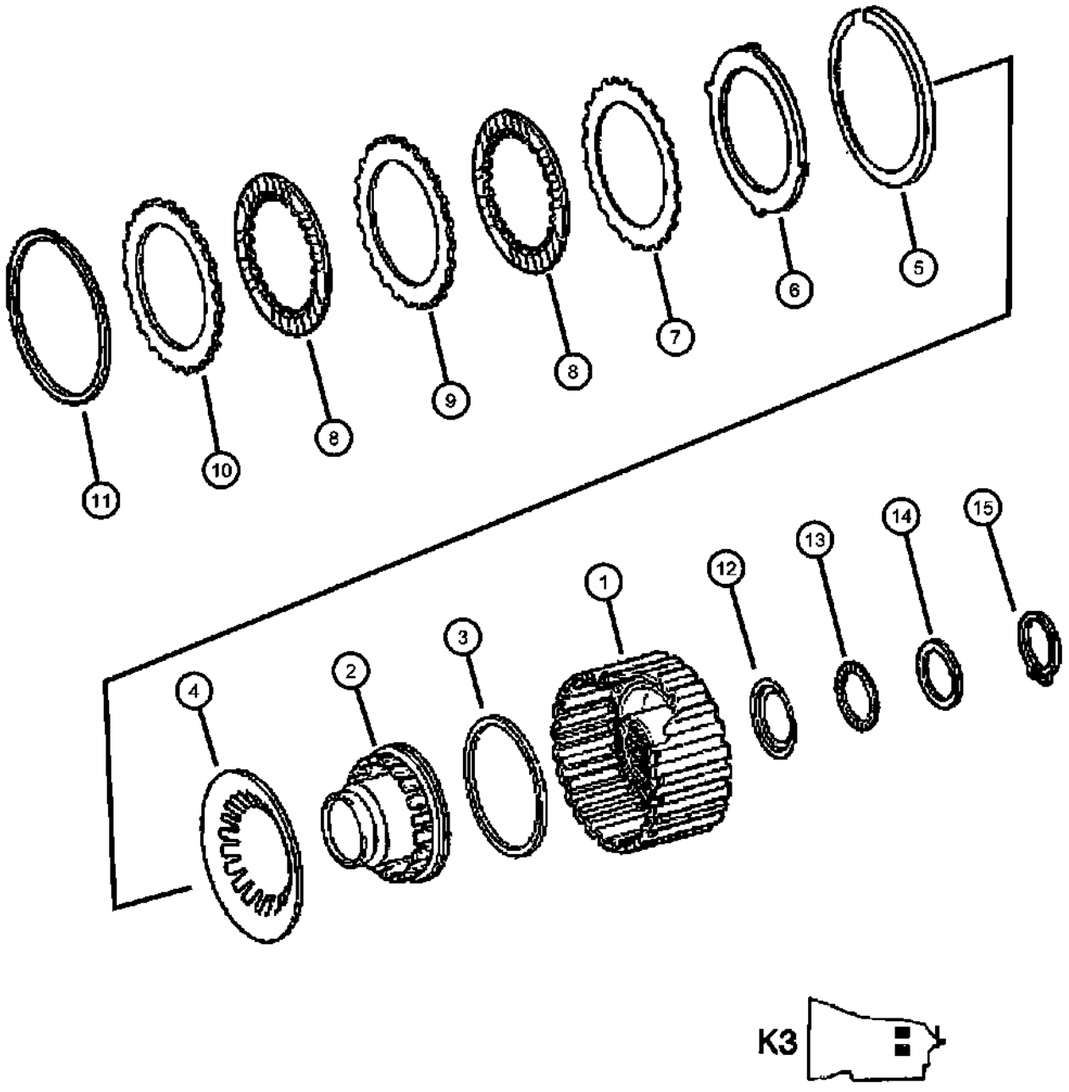

ITEM	PART NUMBER	QTY	LINE	SERIES	BODY	ENGINE	TRANS	TRIM	DESCRIPTION
NOTE:									
Sales Code:									
[DGZ]=5 Speed Automatic Transmission - [W5A380]									
[EGZ]=3.5L V-6 Gas Engine [Mercedes Benz]									
[EXM]=3.0L Turbo Diesel Engine [Mercedes Benz]									
1									RETAINER, Clutch
	52108524AA	1	2, 3, 6, 7	L		EG2	DGZ		
	52108548AB	1	2, 3, 6, 7	L		EXM	DGZ		
2	52108094AA	1	2, 3, 6, 7	L		EG2, EXM	DGZ		PISTON
3	52108093AA	1	2, 3, 6, 7	L		EG2, EXM	DGZ		SEAL, Transmission
4	52108095AA	1	2, 3, 6, 7	L		EG2, EXM	DGZ		DISC, Spring
5	52107968AA	1	2, 3, 6, 7	L		EG2, EXM	DGZ		SNAP RING
6	52108096AA	1	2, 3, 6, 7	L		EG2, EXM	DGZ		DISC, Spring
7	52108004AA	1	2, 3, 6, 7	L		EG2, EXM	DGZ		DISC, Outer, [1.8MM]
8	52108528AA	1	2, 3, 6, 7	L		EG2, EXM	DGZ		DISC, Inner
9	52108529AA	5	2, 3, 6, 7	L		EG2, EXM	DGZ		DISC, Outer
10	52108011AA	1	2, 3, 6, 7	L		EG2, EXM	DGZ		DISC, Outer
11									SNAP RING
	52107970AA	AR	2, 3, 6, 7	L		EG2, EXM	DGZ		[2.3MM]
	52107972AA	AR	2, 3, 6, 7	L		EG2, EXM	DGZ		[2.9MM]
	52107973AA	AR	2, 3, 6, 7	L		EG2, EXM	DGZ		[3.2MM]
	52107974AA	AR	2, 3, 6, 7	L		EG2, EXM	DGZ		[2.0MM]
	52107971AA	1	2, 3, 6, 7	L		EG2, EXM	DGZ		[2.6MM]
12	52108148AA	1	2, 3, 6, 7	L		EXM, EG2	DGZ		SPACER
13	52108152AA	1	2, 3, 6, 7	L		EG2, EXM	DGZ		NEEDLE BEARING
14									PLATE
	52108149AA	AR	2, 3, 6, 7	L		EG2, EXM	DGZ		[3.7MM]
	52108150AA	AR	2, 3, 6, 7	L		EG2, EXM	DGZ		[3.1MM]
	52108151AA	AR	2, 3, 6, 7	L		EG2, EXM	DGZ		[3.4MM]
15	06507358AA	1	2, 3, 6, 7	L		EG2, EXM	DGZ		RING

SPRINTER (VB)

SERIES	LINE	BODY	ENGINE	TRANSMISSION
L = LOWLINE	3 = HD DODGE 2WD 2 = Med. Duty DODGE 2WD	03 = CAB CHASSIS WHEEL BASE 3 05 = CAB CHASSIS WHEEL BASE 5 13 = 119 WB 53 = 119 WB 15 = VAN WHEEL BASE 5 55 = WAGON WHEEL BASE 5 17 = VAN WHEEL BASE 7	EG2 = 3.5L V6 Gas Engine EXM = 3.0L V6 Turbo Diesel Engine	DGZ = 5-Speed Auto W5A380 Transmission

AR = use ase required - = Non illustrrated part

Multiple Disk Brake / [B2/B3]
Figure NAG1-470

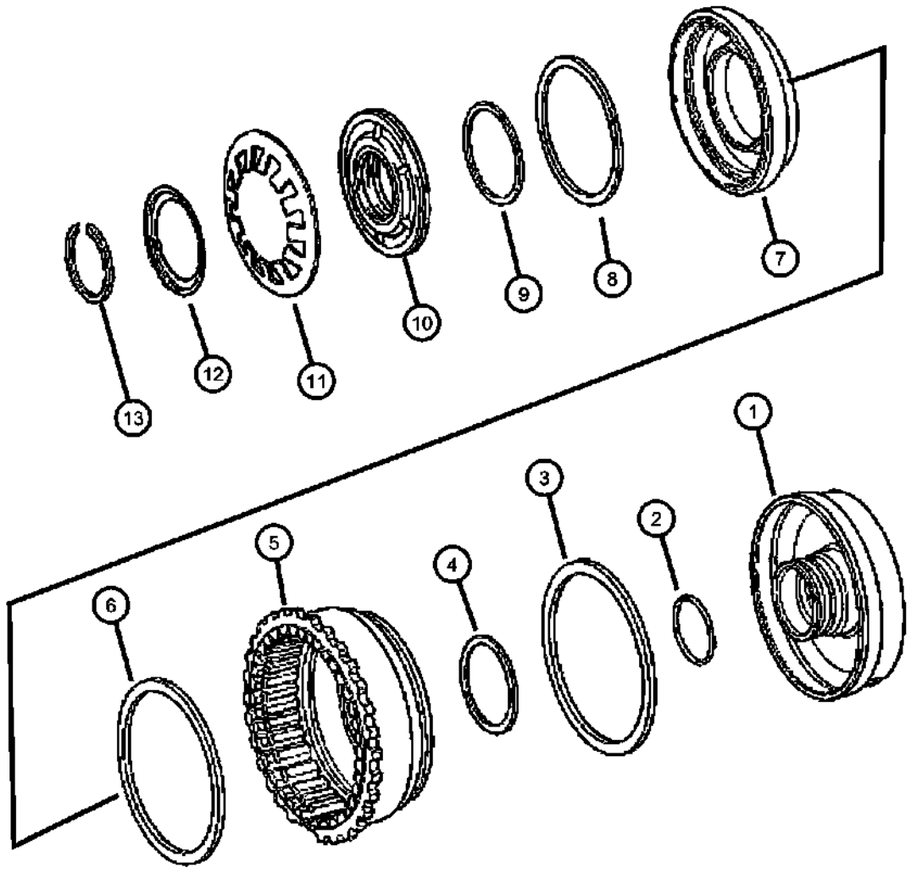

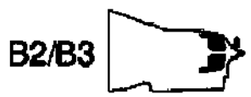

ITEM	PART NUMBER	QTY	LINE	SERIES	BODY	ENGINE	TRANS	TRIM	DESCRIPTION

NOTE:
Sales Code:
[DGZ]=5 Speed Automatic Transmission - [W5A380]
[EGZ]=3.5L V-6 Gas Engine [Mercedes Benz]
[EXM]=3.0L Turbo Diesel Engine [Mercedes Benz]

1	52108182AA	1	2, 3, 6, 7	L		EG2, EXM	DGZ		PLUNGER
2	52108185AA	2	2, 3, 6, 7	L		EG2, EXM	DGZ		SEAL, Transmission
3	52108188AA	1	2, 3, 6, 7	L		EG2, EXM	DGZ		SEAL, Transmission
4	52108189AA	1	2, 3, 6, 7	L		EG2, EXM	DGZ		SEAL, Transmission
5	52108395AA	1	2, 3, 6, 7	L		EG2, EXM	DGZ		PISTON
6	52108199AA	1	2, 3, 6, 7	L		EG2, EXM	DGZ		SEAL, Transmission
7	52108191AA	1	2, 3, 6, 7	L		EG2, EXM	DGZ		PISTON
8	52108200AA	1	2, 3, 6, 7	L		EG2, EXM	DGZ		SEAL, Transmission
9	52108201AA	1	2, 3, 6, 7	L		EG2, EXM	DGZ		SEAL, Transmission
10	52108351AA	1	2, 3, 6, 7	L		EG2, EXM	DGZ		RING, Piston
11	52108202AA	1	2, 3, 6, 7	L		EG2, EXM	DGZ		DISC, Spring
12	52108203AA	1	2, 3, 6, 7	L		EG2, EXM	DGZ		SPRING, Retainer
13	52107977AA	1	2, 3, 6, 7	L		EG2, EXM	DGZ		SNAP RING

SPRINTER (VB)

SERIES	LINE	BODY	ENGINE	TRANSMISSION
L = LOWLINE	3 = HD DODGE 2WD 2 = Med. Duty DODGE 2WD	03 = CAB CHASSIS WHEEL BASE 3 05 = CAB CHASSIS WHEEL BASE 5 13 = 119 WB 53 = 119 WB 15 = VAN WHEEL BASE 5 55 = WAGON WHEEL BASE 5 17 = VAN WHEEL BASE 7	EG2 = 3.5L V6 Gas Engine EXM = 3.0L V6 Turbo Diesel Engine	DGZ = 5-Speed Auto W5A380 Transmission

Multiple Disk Brake / [B2/B3]
Figure NAG1-480

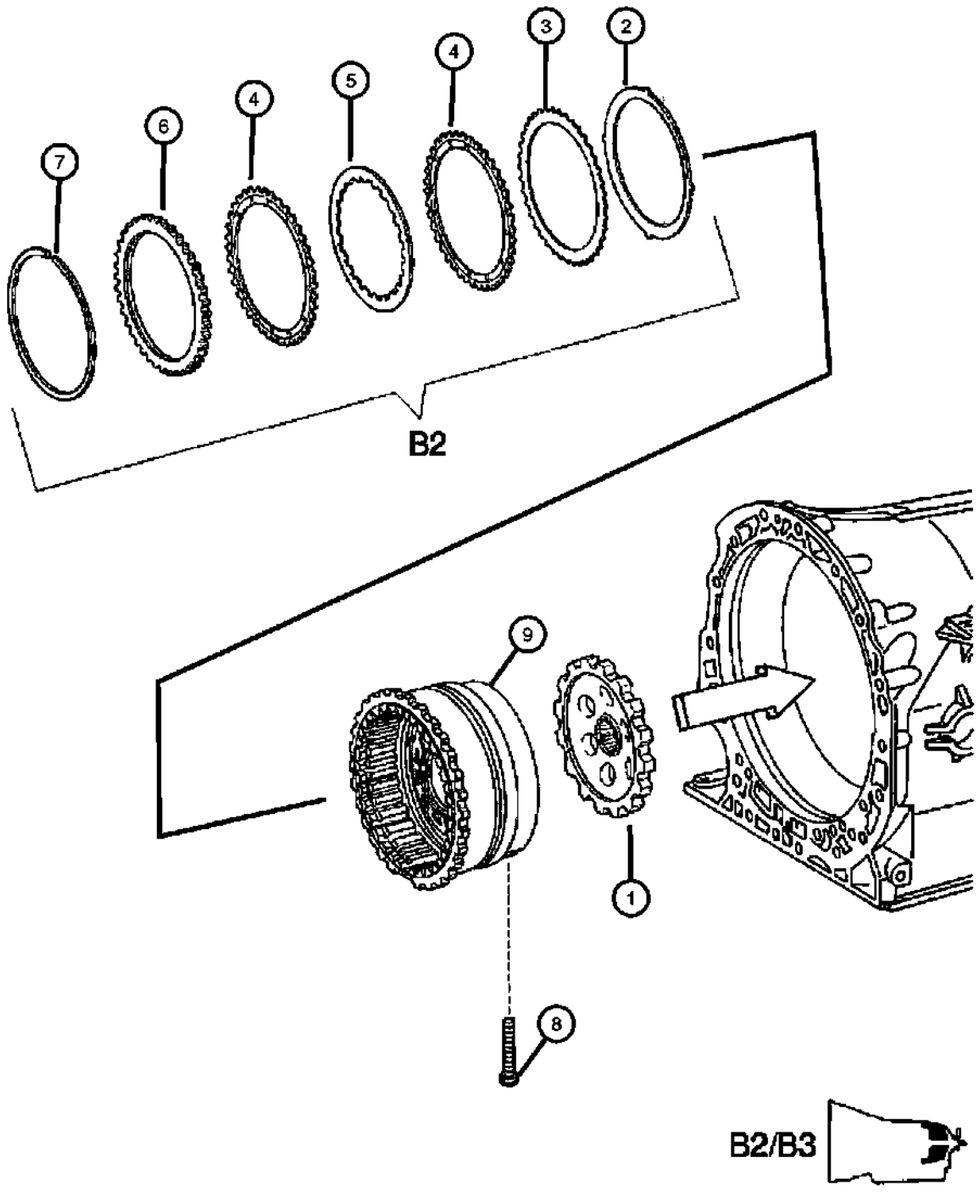

ITEM	PART NUMBER	QTY	LINE	SERIES	BODY	ENGINE	TRANS	TRIM	DESCRIPTION
	NOTE:Drum Package Is Not Serviced In An Assembly. Please See Illustration [#470] Callouts [1,2,3,4 & 5] To Obtain Part Numbers								
	Sales Code:								
	[DGZ]=5 Speed Automatic Transmission - [W5A380]								
	[EGZ]=3.5L V-6 Gas Engine [Mercedes Benz]								
	[EXM]=3.0L Turbo Diesel Engine [Mercedes Benz]								
1	05117843AA	1	2, 3, 6, 7	L					SPRAG, Transmission Parking
2	52108354AA	1	2, 3, 6, 7	L		EG2, EXM	DGZ		DISC, Spring
3	52108013AA	1	2, 3, 6, 7	L		EXM, EG2	DGZ		DISC, Outer, [1.8MM]
4	52108572AA	5	2, 3, 6, 7	L		EG2, EXM	DGZ		DISC, Outer
5	52108015AA	4	2, 3, 6, 7	L		EG2, EXM	DGZ		DISC, Inner
6	52108014AA	1	2, 3, 6, 7	L		EG2, EXM	DGZ		DISC, Outer, [6.5MM]
7									SNAP RING
	52107979AA	AR	2, 3, 6, 7	L		EG2, EXM	DGZ		[4.1MM]
	52107980AA	AR	2, 3, 6, 7	L		EG2, EXM	DGZ		[3.8MM]
	52107981AA	AR	2, 3, 6, 7	L		EG2, EXM	DGZ		[3.5MM]
	52107982AA	AR	2, 3, 6, 7	L		EG2, EXM	DGZ		[3.2MM]
	52107983AA	AR	2, 3, 6, 7	L		EG2, EXM	DGZ		[2.9MM]
8	52108205AA	2	2, 3, 6, 7	L		EG2, EXM	DGZ		SCREW
9	52108205AA	2							DRUM, Note:Drum Package Is Not Serviced In An Assembly. Please See Illustration [#470] Callouts [1,2,3,4 & 5] To Obtain Part Numbers, (NOT SERVICED)

SPRINTER (VB)

SERIES	LINE	BODY	ENGINE	TRANSMISSION
L = LOWLINE	3 = HD DODGE 2WD 2 = Med. Duty DODGE 2WD	03 = CAB CHASSIS WHEEL BASE 3 05 = CAB CHASSIS WHEEL BASE 5 13 = 119 WB 53 = 119 WB 15 = VAN WHEEL BASE 5 55 = WAGON WHEEL BASE 5 17 = VAN WHEEL BASE 7	EG2 = 3.5L V6 Gas Engine EXM = 3.0L V6 Turbo Diesel Engine	DGZ = 5-Speed Auto W5A380 Transmission

AR = use ase required - = Non illustrrated part

Multiple Disk Brake / [B2/B3]
Figure NAG1-490

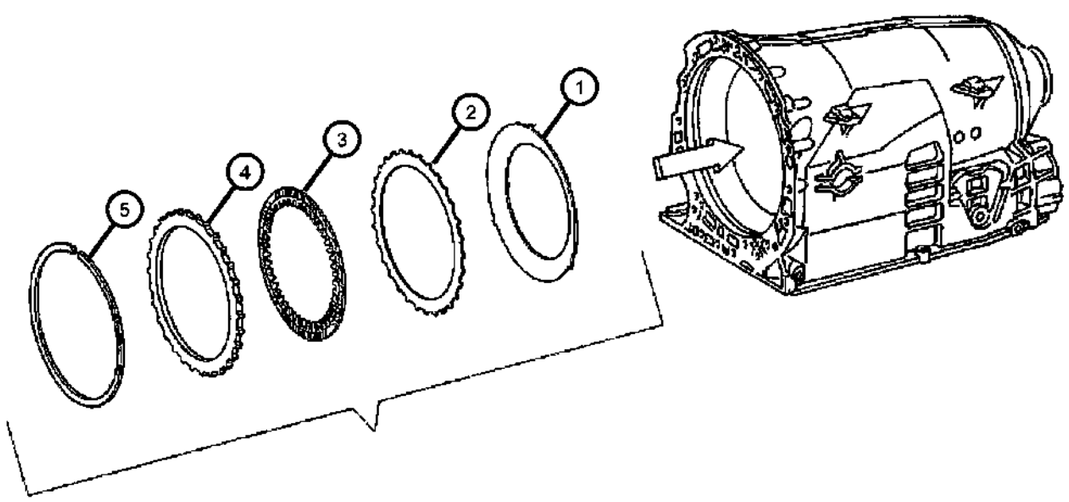



ITEM	PART NUMBER	QTY	LINE	SERIES	BODY	ENGINE	TRANS	TRIM	DESCRIPTION
NOTE:									
Sales Code:									
[DGZ]=5 Speed Automatic Transmission - [W5A380]									
[EGZ]=3.5L V-6 Gas Engine [Mercedes Benz]									
[EXM]=3.0L Turbo Diesel Engine [Mercedes Benz]									
1	52108356AA	1	2, 3, 6, 7	L		EG2, EXM	DGZ		DISC, Spring
2	52108017AA	5	2, 3, 6, 7	L		EG2, EXM	DGZ		DISC, Outer, [1.8MM]
3	52108573AA	4	2, 3, 6, 7	L		EG2, EXM	DGZ		DISC, Inner
4	52108018AA	1	2, 3, 6, 7	L		EG2, EXM	DGZ		DISC, Outer, [6.5MM]
5									SNAP RING
	52107990AA	AR	2, 3, 6, 7	L		EG2, EXM	DGZ		[4.8MM]
	52107985AA	AR	2, 3, 6, 7	L		EG2, EXM	DGZ		[3.2MM]
	52107986AA	AR	2, 3, 6, 7	L		EG2, EXM	DGZ		[3.5MM]
	52107987AA	AR	2, 3, 6, 7	L		EG2, EXM	DGZ		[3.8MM]
	52107988AA	AR	2, 3, 6, 7	L		EG2, EXM	DGZ		[4.1MM]
	52107989AA	AR	2, 3, 6, 7	L		EG2, EXM	DGZ		[4.4MM]

SPRINTER (VB)

SERIES	LINE	BODY	ENGINE	TRANSMISSION
L = LOWLINE	3 = HD DODGE 2WD 2 = Med. Duty DODGE 2WD	03 = CAB CHASSIS WHEEL BASE 3 05 = CAB CHASSIS WHEEL BASE 5 13 = 119 WB 53 = 119 WB 15 = VAN WHEEL BASE 5 55 = WAGON WHEEL BASE 5 17 = VAN WHEEL BASE 7	EG2 = 3.5L V6 Gas Engine EXM = 3.0L V6 Turbo Diesel Engine	DGZ = 5-Speed Auto W5A380 Transmission

AR = use ase required - = Non illustrrated part

<< RETURN TO GROUP INDEX

Harness To Valve Body Connector Repair
Figure NAG1-705

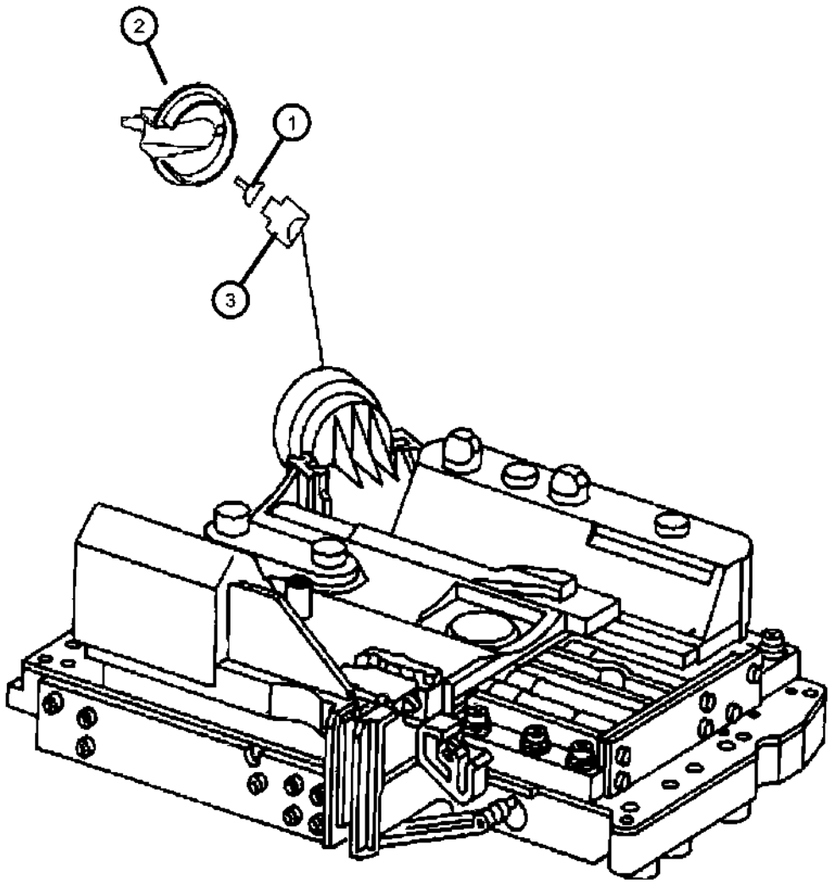

ITEM	PART NUMBER	QTY	LINE	SERIES	BODY	ENGINE	TRANS	TRIM	DESCRIPTION
1	05142110AA	1	2, 3, 6, 7	L		EG2, EXM	DGZ		WIRING, Repair Harness
2	05120884AA	1	2, 3, 6, 7	L		EG2, EXM	DGZ		CAP
3	05120265AA	1	2, 3, 6, 7	L		EG2, EXM	DGZ		CONNECTOR
-4	05135804AA	1	2, 3, 6, 7	L		EG2, EXM	DGZ		TUBE, Heat Shrink, [Green / 0.7 - 2.4 MM2]
-5									TUBING, Heat Shrinkable
	05135848AA	1	2, 3, 6, 7	L		EG2, EXM	DGZ		[Red / 2.0 - 4.0 MM2]
	05135849AA	1	2, 3, 6, 7	L		EG2, EXM	DGZ		[Blue / 3.5 - 8.0 MM2]
	05135850AA	1	2, 3, 6, 7	L		EG2, EXM	DGZ		[Yellow / 7.5 - 12.0 MM2]
-6									TUBING, Heat Shrinkable
	05135851AA	1	2, 3, 6, 7	L		EG2, EXM	DGZ		Joint [0.5 MM2]
	05135852AA	1	2, 3, 6, 7	L		EG2, EXM	DGZ		Joint [0.8 MM2]
	05135853AA	1	2, 3, 6, 7	L		EG2, EXM	DGZ		Joint [1.3 MM2]
	05135854AA	1	2, 3, 6, 7	L		EG2, EXM	DGZ		Joint [2.0 MM2]

SPRINTER (VB)

SERIES	LINE	BODY	ENGINE	TRANSMISSION
L = LOWLINE	3 = HD DODGE 2WD 2 = Med. Duty DODGE 2WD	03 = CAB CHASSIS WHEEL BASE 3 05 = CAB CHASSIS WHEEL BASE 5 13 = 119 WB 53 = 119 WB 15 = VAN WHEEL BASE 5 55 = WAGON WHEEL BASE 5 17 = VAN WHEEL BASE 7	EG2 = 3.5L V6 Gas Engine EXM = 3.0L V6 Turbo Diesel Engine	DGZ = 5-Speed Auto W5A380 Transmission

Electronic Hydraulic Control Unit
Figure NAG1-710

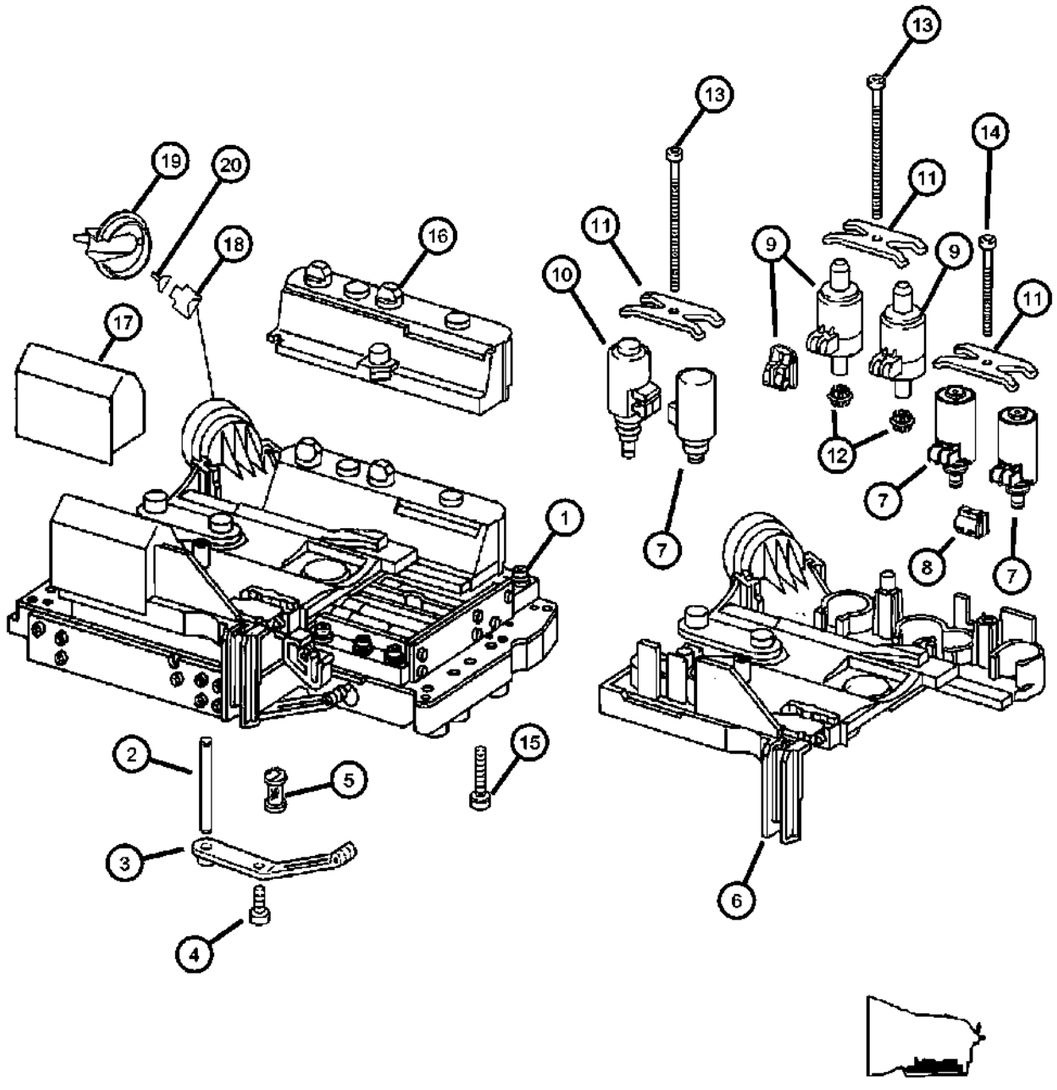

ITEM	PART NUMBER	QTY	LINE	SERIES	BODY	ENGINE	TRANS	TRIM	DESCRIPTION
NOTE:									
Sales Code:									
[DGZ]=5 Speed Automatic Transmission - [W5A380]									
[EGZ]=3.5L V-6 Gas Engine [Mercedes Benz]									
[EXM]=3.0L Turbo Diesel Engine [Mercedes Benz]									
1	05138813AA	1	2, 3, 6, 7	L		EG2, EXM	DGZ		VALVE BODY, Complete
2	52108277AA	1	2, 3, 6, 7	L		EG2, EXM	DGZ		DOWEL
3	52108258AA	1	2, 3, 6, 7	L		EG2, EXM	DGZ		SPRING, Detent-Plate Leaf Spring
4	52108266AA	1	2, 3, 6, 7	L		EG2, EXM	DGZ		SCREW
5	52108304AA	1	2, 3, 6, 7	L		EG2, EXM	DGZ		FILTER, Transmission Oil
6	05097219AA	1	2, 3, 6, 7	L		EG2, EXM	DGZ		VALVE BODY, Electronics Only
7	52108313AA	3	2, 3, 6, 7	L		EG2, EXM	DGZ		SOLENOID, Transmission, [PMW] Valve / Selector VAlve
8	05134761AA	3	2, 3, 6, 7	L		EG2, EXM	DGZ		COVER, Valve Body, Solenoid Connector Cap
9	05138838AA	2	2, 3, 6, 7	L		EG2, EXM	DGZ		SOLENOID, Transmission, Pressure Control Valve
10	52108314AA	1	2, 3, 6, 7	L		EG2, EXM	DGZ		SOLENOID, Transmission, [PWM]
11	52108315AA	3	2, 3, 6, 7	L		EG2, EXM	DGZ		PLATE
12	52108316AA	2	2, 3, 6, 7	L		EG2, EXM	DGZ		FILTER, Transmission Oil
13	52108268AA	2	2, 3, 6, 7	L		EXM, EG2	DGZ		SCREW
14	52108269AA	1	2, 3, 6, 7	L		EG2, EXM	DGZ		SCREW
15	52108267AA	29	2, 3, 6, 7	L		EG2, EXM	DGZ		SCREW
16	52108320AA	1	2, 3, 6, 7	L		EG2, EXM	DGZ		SHIELD, Transmission Solenoid
17	52108321AA	1	2, 3, 6, 7	L		EG2, EXM	DGZ		SHIELD, Transmission Solenoid
18	52108321AA	1							CONNECTOR, See Illustration [705] For Service Parts, (NOT SERVICED)
19	52108321AA	1							CAP, See Illustration [705] For Service Parts, (NOT SERVICED)
20	52108321AA	1							REPAIR KIT, See Illustration [705] For Service Parts, (NOT SERVICED)

SPRINTER (VB)

SERIES	LINE	BODY	ENGINE	TRANSMISSION
L = LOWLINE	3 = HD DODGE 2WD 2 = Med. Duty DODGE 2WD	03 = CAB CHASSIS WHEEL BASE 3 05 = CAB CHASSIS WHEEL BASE 5 13 = 119 WB 53 = 119 WB 15 = VAN WHEEL BASE 5 55 = WAGON WHEEL BASE 5 17 = VAN WHEEL BASE 7	EG2 = 3.5L V6 Gas Engine EXM = 3.0L V6 Turbo Diesel Engine	DGZ = 5-Speed Auto W5A380 Transmission

Oil Pan & Filter
Figure NAG1-720

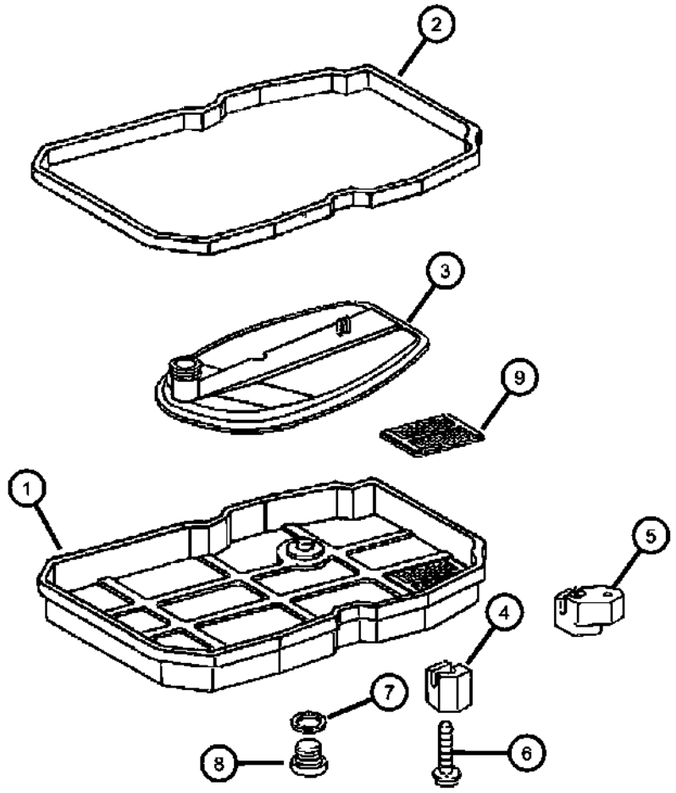

ITEM	PART NUMBER	QTY	LINE	SERIES	BODY	ENGINE	TRANS	TRIM	DESCRIPTION
NOTE:									
Sales Code:									
[DGZ]=5 Speed Automatic Transmission - [W5A380]									
[EGZ]=3.5L V-6 Gas Engine [Mercedes Benz]									
[EXM]=3.0L Turbo Diesel Engine [Mercedes Benz]									
1	52108326AA	1	2, 3, 6, 7	L		EG2, EXM	DGZ		PAN, Transmission Oil
2	52108332AA	1	2, 3, 6, 7	L		EG2, EXM	DGZ		GASKET
3	52108325AA	1	2, 3, 6, 7	L		EG2, EXM	DGZ		FILTER, Transmission Oil
4	52108334AA	AR	2, 3, 6, 7	L		EG2, EXM	DGZ		NUT
5	05080289AA	1	2, 3, 6, 7	L		EG2	DGZ		NUT
6	52108270AA	6	2, 3, 6, 7	L		EG2, EXM	DGZ		SCREW
7	52108330AA	1	2, 3, 6, 7	L		EG2, EXM	DGZ		SEAL, Transmission
8	05080398AB	1	2, 3, 6, 7	L		EG2, EXM	DGZ		PLUG
9	52108331AB	1	2, 3, 6, 7	L		EG2, EXM	DGZ		MAGNET

SPRINTER (VB)

SERIES	LINE	BODY	ENGINE	TRANSMISSION
L = LOWLINE	3 = HD DODGE 2WD 2 = Med. Duty DODGE 2WD	03 = CAB CHASSIS WHEEL BASE 3 05 = CAB CHASSIS WHEEL BASE 5 13 = 119 WB 53 = 119 WB 15 = VAN WHEEL BASE 5 55 = WAGON WHEEL BASE 5 17 = VAN WHEEL BASE 7	EG2 = 3.5L V6 Gas Engine EXM = 3.0L V6 Turbo Diesel Engine	DGZ = 5-Speed Auto W5A380 Transmission

AR = use ase required - = Non illustrrated part

<< RETURN TO GROUP INDEX

Gearshift Control
Figure NAG1-1210

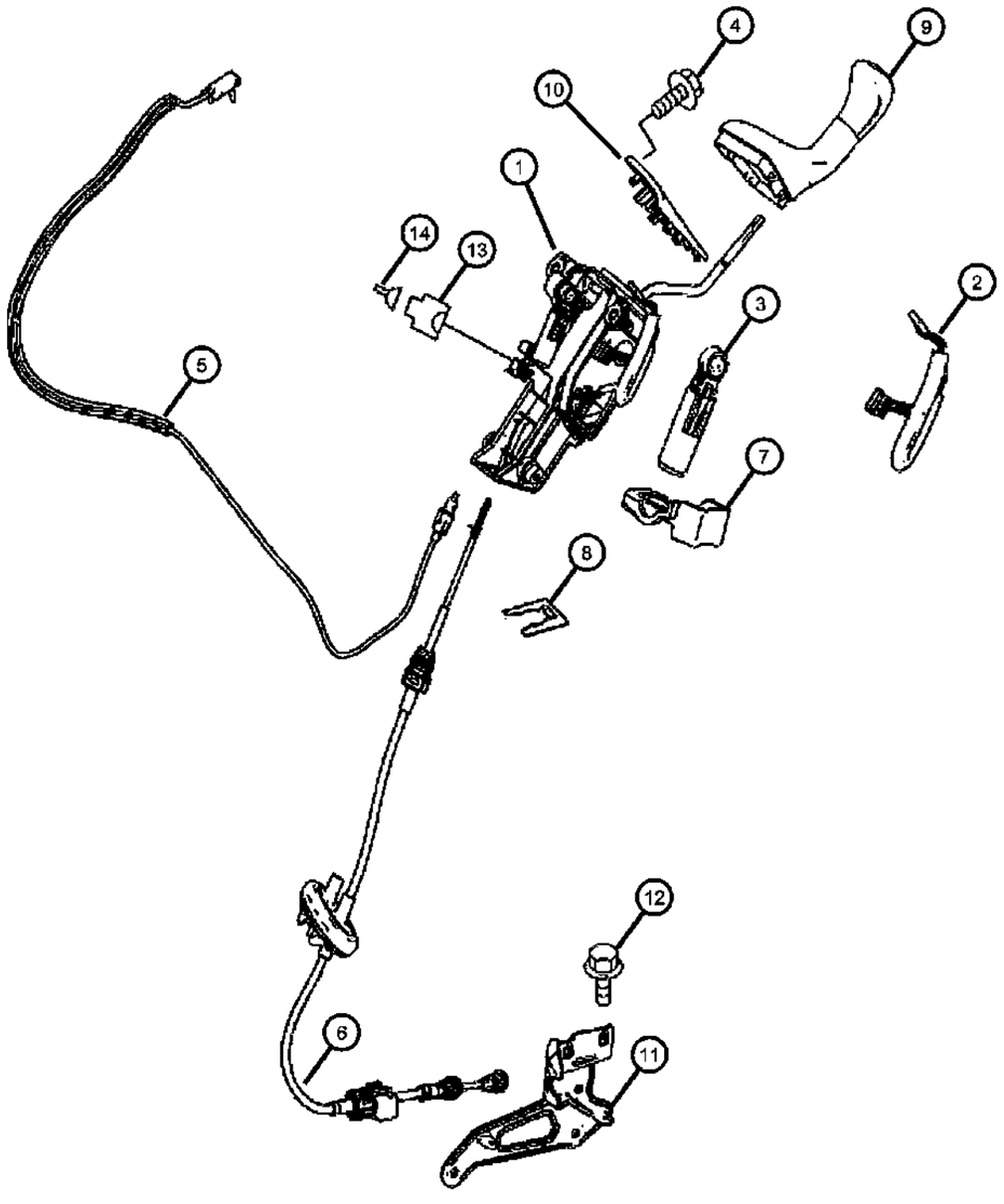

ITEM	PART NUMBER	QTY	LINE	SERIES	BODY	ENGINE	TRANS	TRIM	DESCRIPTION
NOTE:									
Sales Code:									
[DGZ]=5 Speed Automatic Transmission - [W5A380]									
[EGZ]=3.5L V-6 Gas Engine [Mercedes Benz]									
[EXM]=3.0L Turbo Diesel Engine [Mercedes Benz]									
1	68012893AA	1	2, 3, 6, 7	L		EG2, EXM	DGZ		SHIFTER, Transmission
2	68027699AA	1	2, 3, 6, 7	L		EG2, EXM	DGZ		HARNESS, Wiring
3	68027702AA	1	2, 3, 6, 7	L		EG2, EXM	DGZ		ADJUSTER
4									BOLT
	06104025AA	2	3, 7	L		EXM, EG2	DGZ		
		2	2, 6	L		EG2, EXM	DGZ		
5	68012899AA	1	2, 3, 6, 7	L		EG2, EXM	DGZ		CABLE, Gear Selector, Inter Lock Cable
6	68012898AA	1	2, 3, 6, 7	L		EG2, EXM	DGZ		CABLE, Gear Selector
7	68027704AA	1	2, 3, 6, 7	L		EG2, EXM	DGZ		RETAINER
8									CLIP, Cable
	05117823AA	1	3, 7	L		EG2, EXM	DGZ		
		1	2, 3, 6, 7	L		EG2, EXM	DGZ		
9	68012900AA	1	2, 3, 6, 7	L		EG2, EXM	DGZ		KNOB, Gearshift
10	68012901AA	1	2, 3, 6, 7	L		EG2, EXM	DGZ		COVER, Gearshift
11	68013694AA	1	2, 3, 6, 7	L		EG2, EXM	DGZ		BRACKET, Gearshift
12	06104695AA	3	2, 3, 6, 7	L		EG2, EXM	DGZ		SCREW
13	68010053AA	1	2, 3, 6, 7	L		EG2, EXM	DGZ		CONNECTOR, [8-Pin - N1 5/5]
14									TERMINAL
	05103873AA	3	2, 3, 6, 7	L		EG2, EXM	DGZ		[0.75 MM2 MQS - N1 5/5]
		3	3, 7	L		EG2, EXM	DGZ		[0.75 MM2 MQS - N1 5/5]

SPRINTER (VB)

SERIES	LINE	BODY	ENGINE	TRANSMISSION
L = LOWLINE	3 = HD DODGE 2WD 2 = Med. Duty DODGE 2WD	03 = CAB CHASSIS WHEEL BASE 3 05 = CAB CHASSIS WHEEL BASE 5 13 = 119 WB 53 = 119 WB 15 = VAN WHEEL BASE 5 55 = WAGON WHEEL BASE 5 17 = VAN WHEEL BASE 7	EG2 = 3.5L V6 Gas Engine EXM = 3.0L V6 Turbo Diesel Engine	DGZ = 5-Speed Auto W5A380 Transmission

Group - 22

Wheels, Covers and Jacks

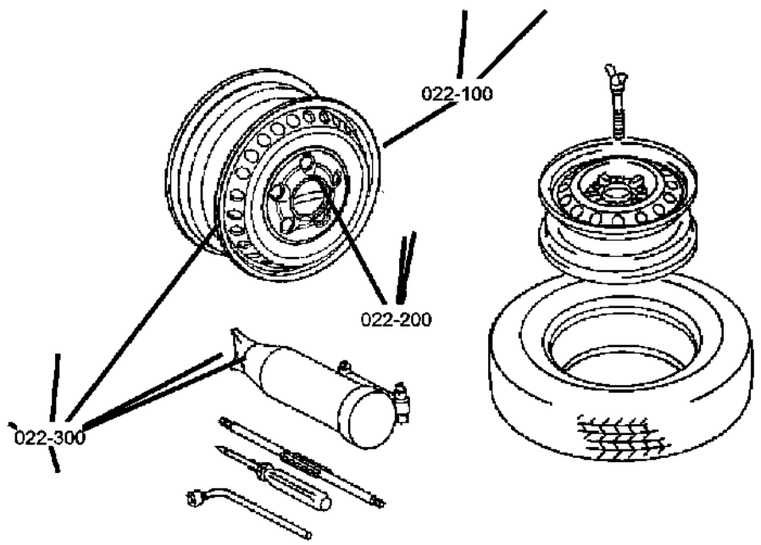

Group - 22 Wheels, Covers and Jacks

Illustration Title — Group-Fig. No.

Wheels and Hardware
Wheels ..... Fig. 22 - 110

Jack Stowage
Jack ..... Fig. 22 - 305

Spare Tire Stowage
Spare Tire Carrier ..... Fig. 22 - 405

022-100 Wheels and Hardware 	**022-300** Jack Stowage 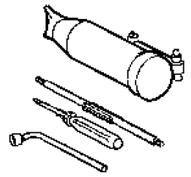	**022-400** Spare Tire Stowage 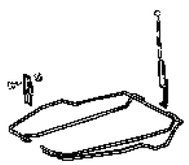	

Wheels
Figure 22-110

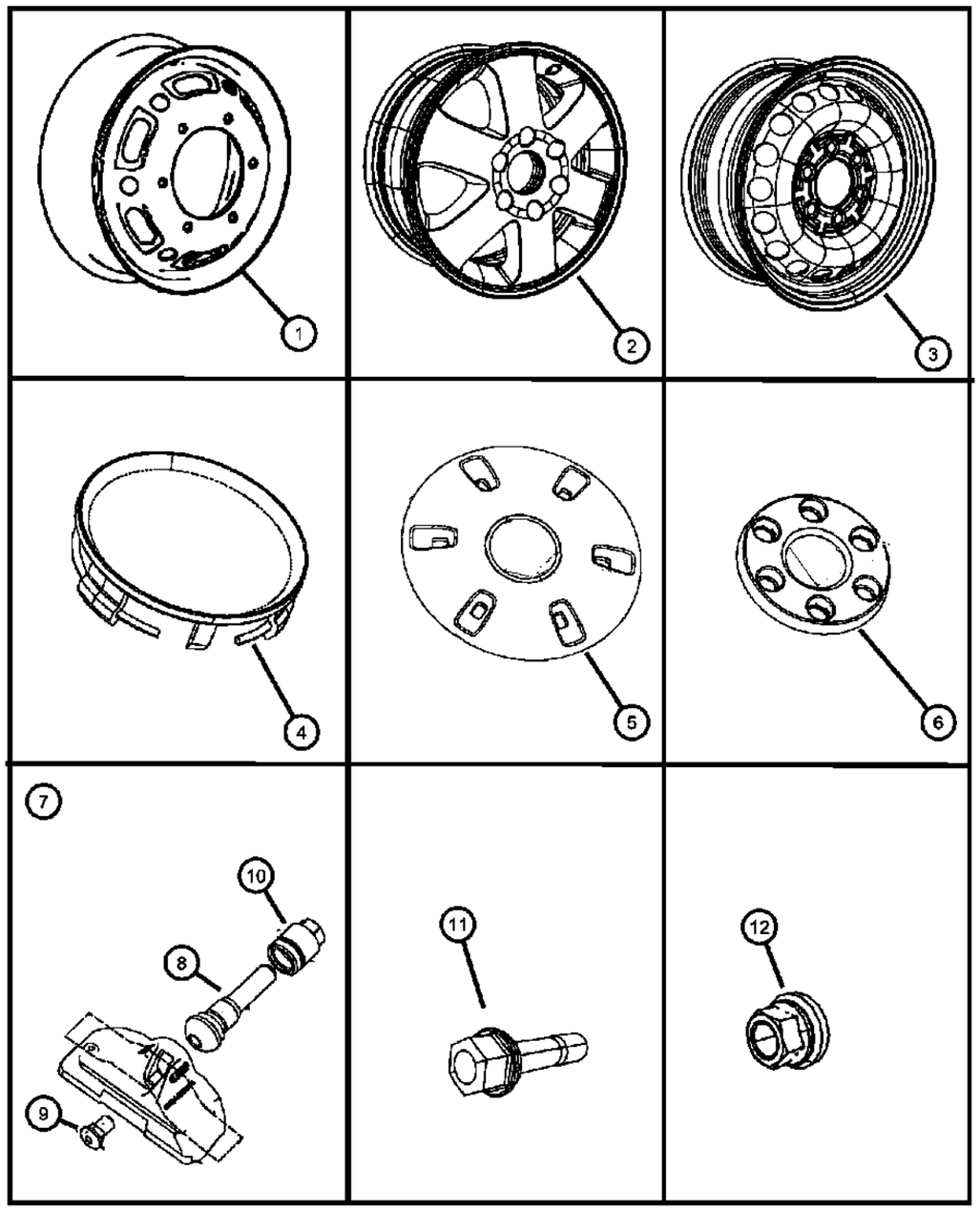

ITEM	PART NUMBER	QTY	LINE	SERIES	BODY	ENGINE	TRANS	TRIM	DESCRIPTION
1									WHEEL, Steel
	1JJ25DX9AA	6	3, 7	L					Black Steel Wheel / With [WWA + WDK] Without [WWW]
	1JJ25P01AA	6	3, 7	L					White Steel Wheel / With [WWW + WDK] Without [WWA]
	1JJ25SZ0AA	6	3, 7	L					Silver Steel Wheel / With [WDK] Without [-WWA-WWW]
2	68004980AA	4	2, 6	L	13, 15, 17, 53, 55				WHEEL, Aluminum, With [WNB]
3									WHEEL, Steel
	1VB07DX9AA	4	2, 6	L					Black Steel Wheel / With [WWA + WDG]
	1VB07P01AA	4	2, 6	L					White Steel Wheel / With [WWW + WDG]]
	1VB07SZ0AA	4	2, 6	L					Silver Steel Wheel / With [WDG] Without [WWA & WWW]
4	05104570AA	4	2, 6	L	13, 15, 17, 53, 55				CAP, Wheel Center, With [WNB]
5	68025431AA	4	2, 6	L	13, 15, 17, 53, 55				CAP, Wheel Center, With [WDG]
6	68025430AA	2	3, 7	L	03, 05, 13, 15, 17				CAP, Wheel Center, With [WDK]
7	68006771AA	4	2, 6	L					SENSOR, Tire Pressure, Valve stem, With [LAB]
8									STEM, Wheel Valve
	05175255AA	1	2, 3, 6, 7	L					With [WLB]
	68004983AA	2	3, 7	L					Without [LAB]
	68006772AA	99	3, 7	L					Standard Valve
	68006773AA	4	2, 6	L					With [LAB]
9	68006774AA	4	2, 6	L					NUT, Tire Pressure Sensor, With [LAB]
10	68006775AA	4	2, 6	L					CAP, Valve stem, With [LAB]
11									BOLT
	68006805AA	24	2, 6	L					Mounting Wheel Stud / With [WDG]
	68013444AA	24	2, 6	L	13, 15, 17, 53, 55				Mounting Wheel Stud / With [WNB]
12	68013445AA	24	3, 7	L	03, 05, 13, 15, 17				NUT, With [WDK]
-13	68022059AA	4	2, 6	L	13, 15, 17, 53, 55				LABEL, Tire Pressure, With [LAB]

SPRINTER (VB)

SERIES	LINE	BODY	ENGINE	TRANSMISSION
L = LOWLINE	3 = HD DODGE 2WD 2 = Med. Duty DODGE 2WD	03 = CAB CHASSIS WHEEL BASE 3 05 = CAB CHASSIS WHEEL BASE 5 13 = 119 WB 53 = 119 WB 15 = VAN WHEEL BASE 5 55 = WAGON WHEEL BASE 5 17 = VAN WHEEL BASE 7	EG2 = 3.5L V6 Gas Engine EXM = 3.0L V6 Turbo Diesel Engine	DGZ = 5-Speed Auto W5A380 Transmission

Jack
Figure 22-305

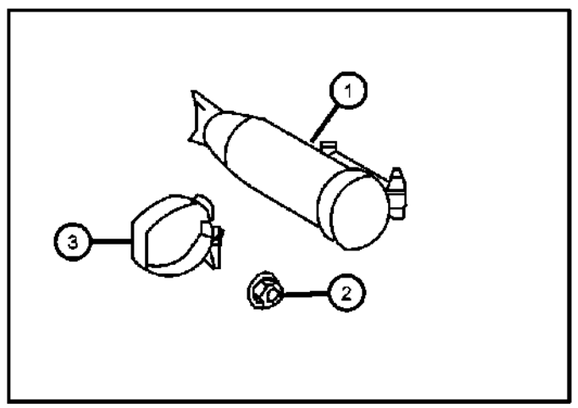

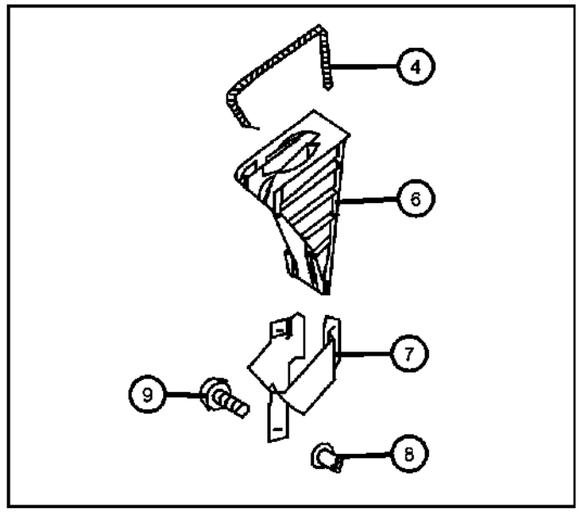

ITEM	PART NUMBER	QTY	LINE	SERIES	BODY	ENGINE	TRANS	TRIM	DESCRIPTION
1	68007087AA	1	2, 3, 6, 7	L					JACK
2									NUT, Hex
	05097674AA	2	3, 7	L	03, 05				Fasten Vehicle Jack M6
		2	2, 3, 6, 7	L	13, 15, 17, 53, 55				Fasten Vehicle Jack M6
3									BRACKET, Jack
	05125276AA	1	2, 3, 6, 7	L	13, 15, 17, 53, 55				
		1	3, 7	L	03, 05				
4	68007093AA	1	3, 7	L	13, 15, 17				RETAINER
-5	68007100AA	1	3, 7	L	03, 05				BRACKET
6	68007091AA	1	2, 3, 6, 7	L	03, 05, 13, 15, 17				BUMPER, Wheel Chock
7	68007099AA	1	3, 7	L	03, 05				BRACKET
8	05133486AA	4	2, 3, 6, 7	L					RIVET
9									SCREW, Hex Flange Head
	06104121AA	4	2, 3, 6, 7	L	13, 15, 17, 53, 55				M6x16
		2	3, 7	L	03, 05				M6x16

SPRINTER (VB)

SERIES	LINE	BODY	ENGINE	TRANSMISSION
L = LOWLINE	3 = HD DODGE 2WD 2 = Med. Duty DODGE 2WD	03 = CAB CHASSIS WHEEL BASE 3 05 = CAB CHASSIS WHEEL BASE 5 13 = 119 WB 53 = 119 WB 15 = VAN WHEEL BASE 5 55 = WAGON WHEEL BASE 5 17 = VAN WHEEL BASE 7	EG2 = 3.5L V6 Gas Engine EXM = 3.0L V6 Turbo Diesel Engine	DGZ = 5-Speed Auto W5A380 Transmission

Spare Tire Carrier
Figure 22-405

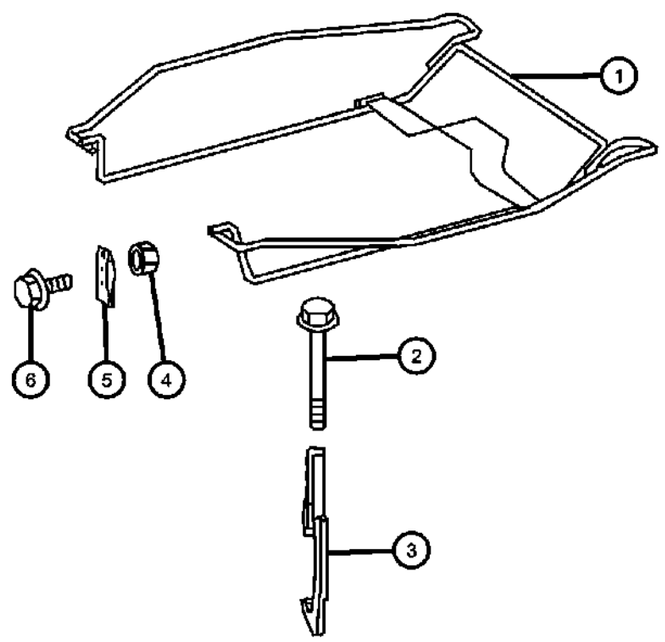

ITEM	PART NUMBER	QTY	LINE	SERIES	BODY	ENGINE	TRANS	TRIM	DESCRIPTION
1									BRACKET, Spare Tire
	68012514AA	1	2, 3, 6, 7	L					[TBN] Underslung Tire Carrier
	68012518AA	1	3, 7	L	13, 15, 17				[Z2D] GVW Rating-8510# with [TBN] Underslung Tire Carrier
2	05119022AA	2	2, 6	L	13, 15, 17, 53, 55				SCREW, Spare Tire
3	05118920AA	2	2, 6	L	13, 15, 17, 53, 55				HOOK, Spare Tire Attach
4	06105169AA	4	2, 3, 6, 7	L					NUT, M8
5									PLATE, Spare Tire
	05104081AA	2	2, 3, 6, 7	L	13, 15, 17, 53, 55				
		2	3, 7	L	03, 05				
6									SCREW
	06104022AB	4	2, 3, 6, 7	L	13, 15, 17, 53, 55				M8x16
		4	3, 7	L	03, 05				M8x16

SPRINTER (VB)

SERIES	LINE	BODY	ENGINE	TRANSMISSION
L = LOWLINE	3 = HD DODGE 2WD 2 = Med. Duty DODGE 2WD	03 = CAB CHASSIS WHEEL BASE 3 05 = CAB CHASSIS WHEEL BASE 5 13 = 119 WB 53 = 119 WB 15 = VAN WHEEL BASE 5 55 = WAGON WHEEL BASE 5 17 = VAN WHEEL BASE 7	EG2 = 3.5L V6 Gas Engine EXM = 3.0L V6 Turbo Diesel Engine	DGZ = 5-Speed Auto W5A380 Transmission

Group - 23D

Wiper/Lock Cylinder and Keys

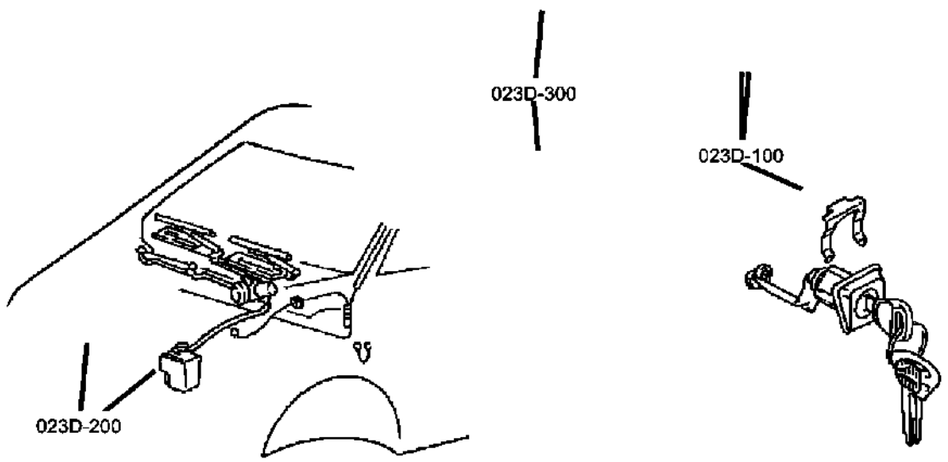

Group - 23D Wiper/Lock Cylinder and Keys

Illustration Title — Group-Fig. No.

Windshield Wiper and Washer Systems

Front Windshield Wipers ..... Fig. 23D - 210
Rear Windshield Wiper ..... Fig. 23D - 220
Windsheild Cleaning Pumps & Reservoir ..... Fig. 23D - 230
Head Lamp Cleaning System ..... Fig. 23D - 240

23D-200 Windshield Wiper and Washer Systems 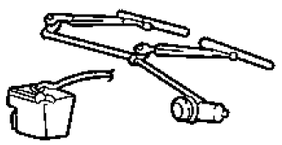			

Front Windshield Wipers
Figure 23D-210

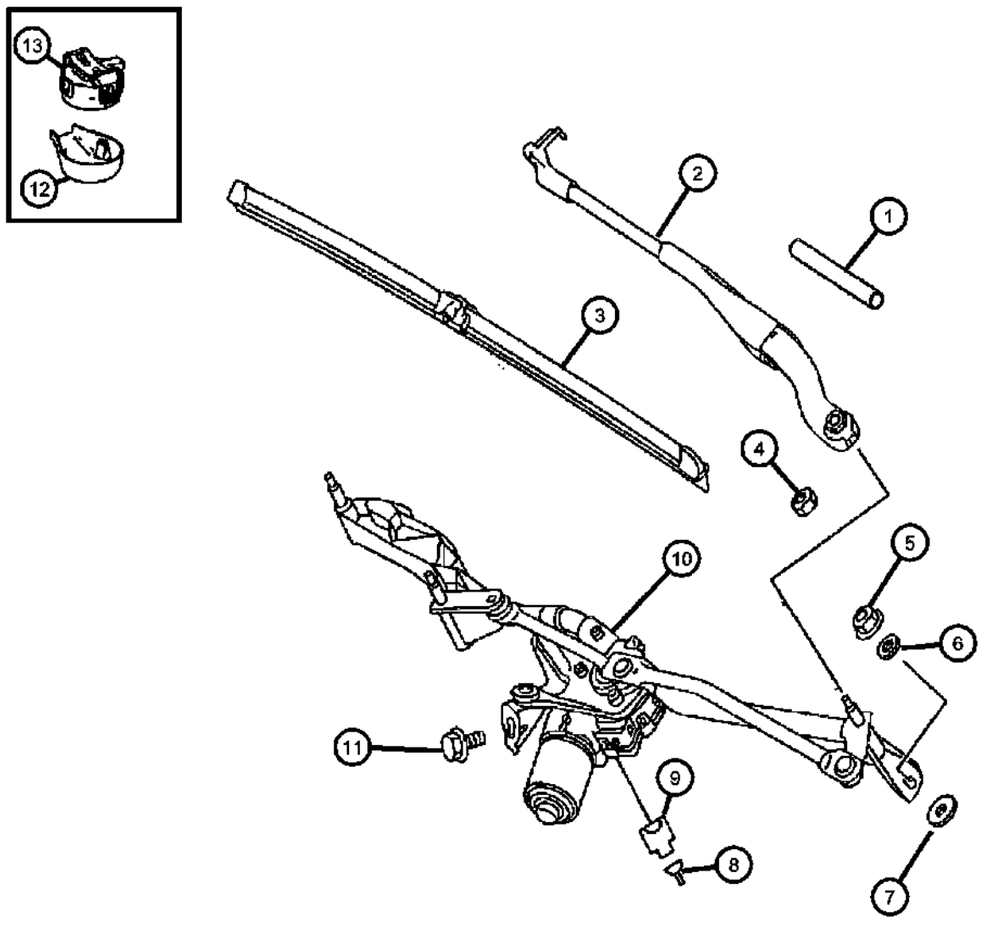

ITEM	PART NUMBER	QTY	LINE	SERIES	BODY	ENGINE	TRANS	TRIM	DESCRIPTION
1	68017463AA	117	2, 3, 6, 7						HOSE, Pane Washer System,Nozzles 4.3x1.9
2									WIPER
	68017436AA	1	3, 7		03, 05				Left
		1	2, 3, 6, 7		17, 53, 55, 13, 15				Left
	68017438AA	1	3, 7		03, 05				Right
		1	2, 3, 6, 7		13, 15, 17, 53, 55				Right
3									BLADE, Wiper
	68017437AA	1	3, 7		03, 05				Driver
		1	2, 3, 6, 7		13, 15, 17, 53, 55				Driver
	68017439AA	1	3, 7		03, 05				Passenger
		1	7, 2, 3, 6		13, 15, 17, 53, 55				Passenger
4									NUT, Hex Flange Lock, M14x1.50
	06104717AA	2	2, 3, 6, 7		13, 15, 17, 53, 55				Wiper Arm on Spindle M10
		2	3, 7		03, 05				Wiper Arm on Spindle M10
5	68017442AA	2	2, 3, 6, 7						NUT, Wiper System to Cowl M22x1
6	68017443AA	2	2, 3, 6, 7						WASHER, Wiper System to Cowl
7	68017444AA	2	2, 3, 6, 7						WASHER, Wiper System to Cowl
8	05133353AA	AR	2, 3, 6, 7						TERMINAL, 1.5-2.5 MM2;M6/1
9	05135758AA	1	2, 3, 6, 7						CONNECTOR, Female
10									LINKAGE ASSY, LINKAGE ASSY-W/WPR
	68017435AA	1	3, 7		03, 05				
		1	2, 3, 6, 7		13, 15, 17, 53, 55				
11									SCREW, Hex Head, M6x12
	06104120AA	1	3, 7		03, 05				Support to Bracket M6x12
		1	2, 3, 6, 7		13, 15, 17, 53, 55				Support to Bracket M6x12
12	68013425AA	1	2, 3, 6, 7						COVER, Sensor
13	68013389AA	1	2, 3, 6, 7						SENSOR, Rain, Rain and Light Sensor
-14									NOZZLE, Washer, Windshield

SPRINTER (VB)

SERIES	LINE	BODY	ENGINE	TRANSMISSION
L = LOWLINE	3 = HD DODGE 2WD 2 = Med. Duty DODGE 2WD	03 = CAB CHASSIS WHEEL BASE 3 05 = CAB CHASSIS WHEEL BASE 5 13 = 119 WB 53 = 119 WB 15 = VAN WHEEL BASE 5 55 = WAGON WHEEL BASE 5 17 = VAN WHEEL BASE 7	EG2 = 3.5L V6 Gas Engine EXM = 3.0L V6 Turbo Diesel Engine	DGZ = 5-Speed Auto W5A380 Transmission

AR = use ase required - = Non illustrrated part

<< RETURN TO GROUP INDEX

Front Windshield Wipers
Figure 23D-210

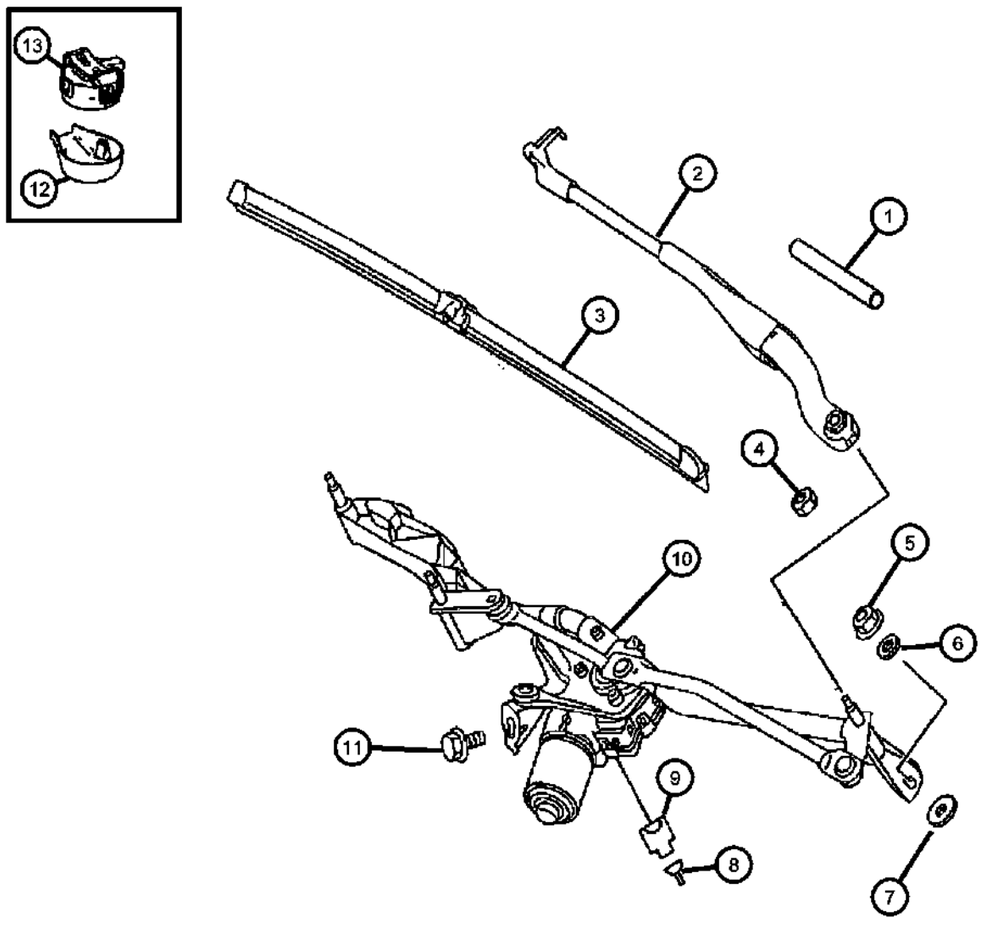

ITEM	PART NUMBER	QTY	LINE	SERIES	BODY	ENGINE	TRANS	TRIM	DESCRIPTION
	68017440AA	1	2, 3, 6, 7						Right
	68017441AA	1	2, 3, 6, 7						Left

SPRINTER (VB)

SERIES	LINE	BODY	ENGINE	TRANSMISSION
L = LOWLINE	3 = HD DODGE 2WD 2 = Med. Duty DODGE 2WD	03 = CAB CHASSIS WHEEL BASE 3 05 = CAB CHASSIS WHEEL BASE 5 13 = 119 WB 53 = 119 WB 15 = VAN WHEEL BASE 5 55 = WAGON WHEEL BASE 5 17 = VAN WHEEL BASE 7	EG2 = 3.5L V6 Gas Engine EXM = 3.0L V6 Turbo Diesel Engine	DGZ = 5-Speed Auto W5A380 Transmission

Rear Windshield Wiper
Figure 23D-220

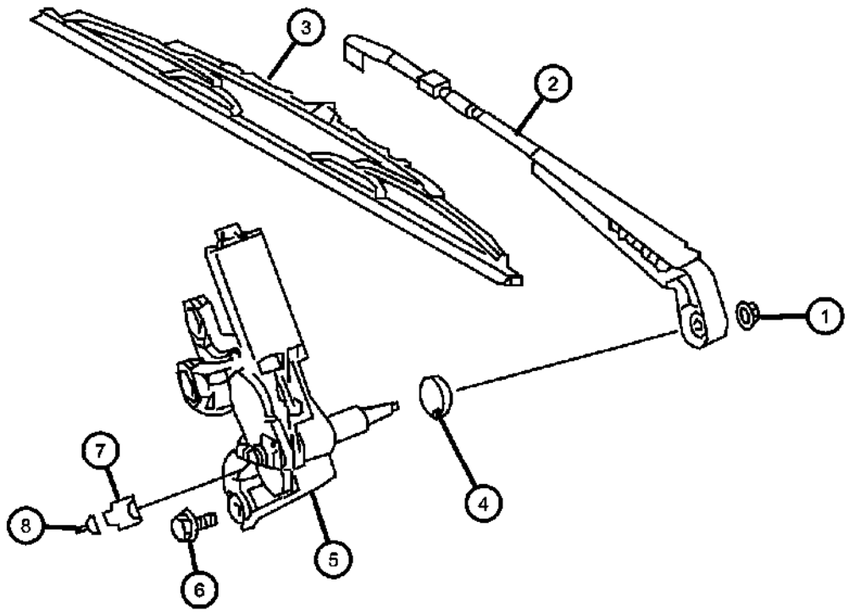

ITEM	PART NUMBER	QTY	LINE	SERIES	BODY	ENGINE	TRANS	TRIM	DESCRIPTION
1	05126206AA	1	2, 3, 6, 7		13, 15, 17, 53, 55				NUT, Wiper Arm Fastening M8-8
2									ARM, Wiper
	68006512AA	1	2, 3, 6, 7		13, 15, 17, 53, 55				Right Door
	68006513AA	1	2, 3, 6, 7		13, 15, 17, 53, 55				Left Door
3	68006511AA	2	2, 3, 6, 7		13, 15, 17, 53, 55				BLADE, Wiper
4	68006509AA	2	2, 3, 6, 7		13, 15, 17, 53, 55				CAP
5									MOTOR
	68006508AA	1	2, 3, 6, 7		13, 15, 17, 53, 55				Left Door
	68006603AA	1	2, 3, 6, 7		13, 15, 17, 53, 55				Right Door
6	06104123AA	3	2, 3, 6, 7		13, 15, 17, 53, 55				SCREW
7	68011274AA	2	2, 3, 6, 7						CONNECTOR, [3 PiN M6/10 - M6/11]
8	05103892AA	1	3, 6, 7, 2						TERMINAL

SPRINTER (VB)

SERIES	LINE	BODY	ENGINE	TRANSMISSION
L = LOWLINE	3 = HD DODGE 2WD 2 = Med. Duty DODGE 2WD	03 = CAB CHASSIS WHEEL BASE 3 05 = CAB CHASSIS WHEEL BASE 5 13 = 119 WB 53 = 119 WB 15 = VAN WHEEL BASE 5 55 = WAGON WHEEL BASE 5 17 = VAN WHEEL BASE 7	EG2 = 3.5L V6 Gas Engine EXM = 3.0L V6 Turbo Diesel Engine	DGZ = 5-Speed Auto W5A380 Transmission

Windsheild Cleaning Pumps & Reservoir
Figure 23D-230

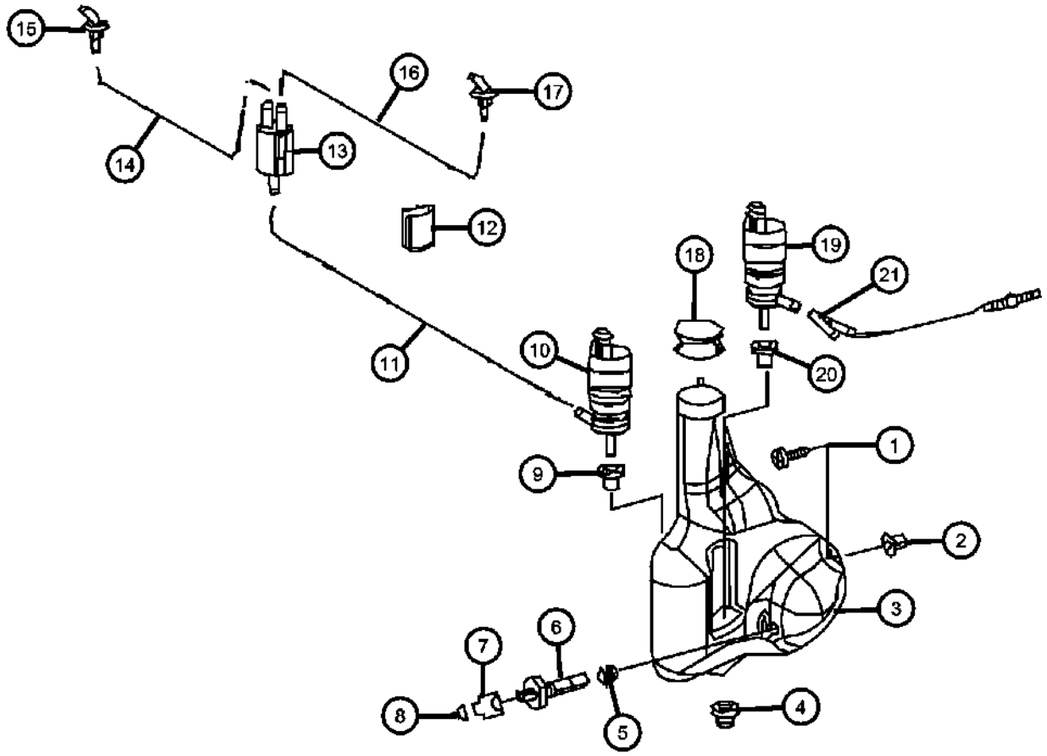

ITEM	PART NUMBER	QTY	LINE	SERIES	BODY	ENGINE	TRANS	TRIM	DESCRIPTION
1									SCREW
	06104582AA	2	3, 7		03, 05				
		2	2, 3, 6, 7		13, 15, 17, 53, 55				
2									PLUG, Push Lock
	05132725AA	2	3, 7		03, 05				
		2	2, 3, 6, 7		13, 15, 17, 53, 55				
3									RESERVOIR, Washer
	68017445AA	1	3, 7		03, 05				
		1	2, 3, 6, 7		13, 15, 17, 53, 55				
4	05120012AA	1	2, 3, 6, 7						GROMMET, Air Cleaner
5									GROMMET, Washer Reservoir
	05097659AA	1	7, 3		03, 05				
		1	2, 3, 6, 7		13, 15, 17, 53, 55				
6	05099273AA	1	2, 3, 6, 7						SENSOR, Washer Fluid Level
7	05120277AA	1	2, 3, 6, 7						CONNECTOR, Wiring Repair
8	05103874AA	1	2, 3, 6, 7						TERMINAL
9									GROMMET, Windshield Washer Pump
	05135548AA	1	3, 7		03, 05				
		1	2, 3, 6, 7		13, 15, 17, 53, 55				
10	68017447AA	1	2, 3, 6, 7						PUMP, Washer, Windshield
11									HOSE, Windshield Washer
	05127702AA	900	3, 7		05, 03				
		900	2, 3, 6, 7		13, 15, 17, 53, 55				
12		900							CLIP, (NOT SERVICED)
13									CHECK VALVE, Washer
	05124963AA	1	3, 7		03, 05				
		1	2, 3, 6, 7		13, 15, 17, 53, 55				
14									HOSE, Windshield Washer
	05127702AA	900	3, 7		03, 05				

SPRINTER (VB)

SERIES	LINE	BODY	ENGINE	TRANSMISSION
L = LOWLINE	3 = HD DODGE 2WD 2 = Med. Duty DODGE 2WD	03 = CAB CHASSIS WHEEL BASE 3 05 = CAB CHASSIS WHEEL BASE 5 13 = 119 WB 53 = 119 WB 15 = VAN WHEEL BASE 5 55 = WAGON WHEEL BASE 5 17 = VAN WHEEL BASE 7	EG2 = 3.5L V6 Gas Engine EXM = 3.0L V6 Turbo Diesel Engine	DGZ = 5-Speed Auto W5A380 Transmission

Windsheild Cleaning Pumps & Reservoir
Figure 23D-230

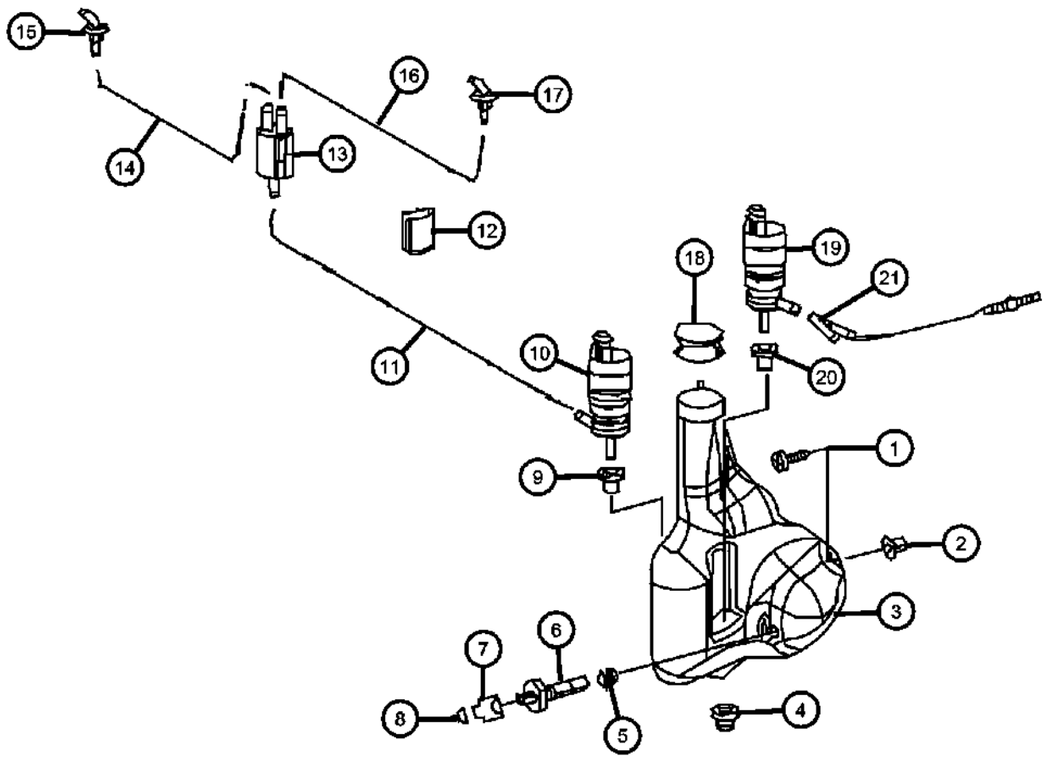

ITEM	PART NUMBER	QTY	LINE	SERIES	BODY	ENGINE	TRANS	TRIM	DESCRIPTION
		900	2, 3, 6, 7		13, 15, 17, 53, 55				
15									CONNECTOR, Washer Hose, Elbow Type
	05125061AA	2	3, 7		03, 05				
		2	2, 3, 6, 7		13, 15, 17, 53, 55				
16									HOSE, Windshield Washer
	05127702AA	900	3, 7		03, 05				
		900	2, 3, 6, 7		13, 15, 17, 53, 55				
17									CONNECTOR, Washer Hose, Elbow Type
	05125061AA	2	3, 7		03, 05				
		2	2, 3, 6, 7		13, 15, 17, 53, 55				
18	68017446AA	1	2, 3, 6, 7						CAP, Washer Reservoir
19	68017447AA	1	2, 3, 6, 7						PUMP, Washer, Windshield
20									GROMMET, Windshield Washer Pump
	05135548AA	1	3, 7		03, 05				
		1	2, 3, 6, 7		13, 15, 17, 53, 55				
21	68017477AA	1	2, 3, 6, 7		13, 15, 17, 53, 55				FITTING

SPRINTER (VB)

SERIES	LINE	BODY	ENGINE	TRANSMISSION
L = LOWLINE	3 = HD DODGE 2WD 2 = Med. Duty DODGE 2WD	03 = CAB CHASSIS WHEEL BASE 3 05 = CAB CHASSIS WHEEL BASE 5 13 = 119 WB 53 = 119 WB 15 = VAN WHEEL BASE 5 55 = WAGON WHEEL BASE 5 17 = VAN WHEEL BASE 7	EG2 = 3.5L V6 Gas Engine EXM = 3.0L V6 Turbo Diesel Engine	DGZ = 5-Speed Auto W5A380 Transmission

Head Lamp Cleaning System
Figure 23D-240

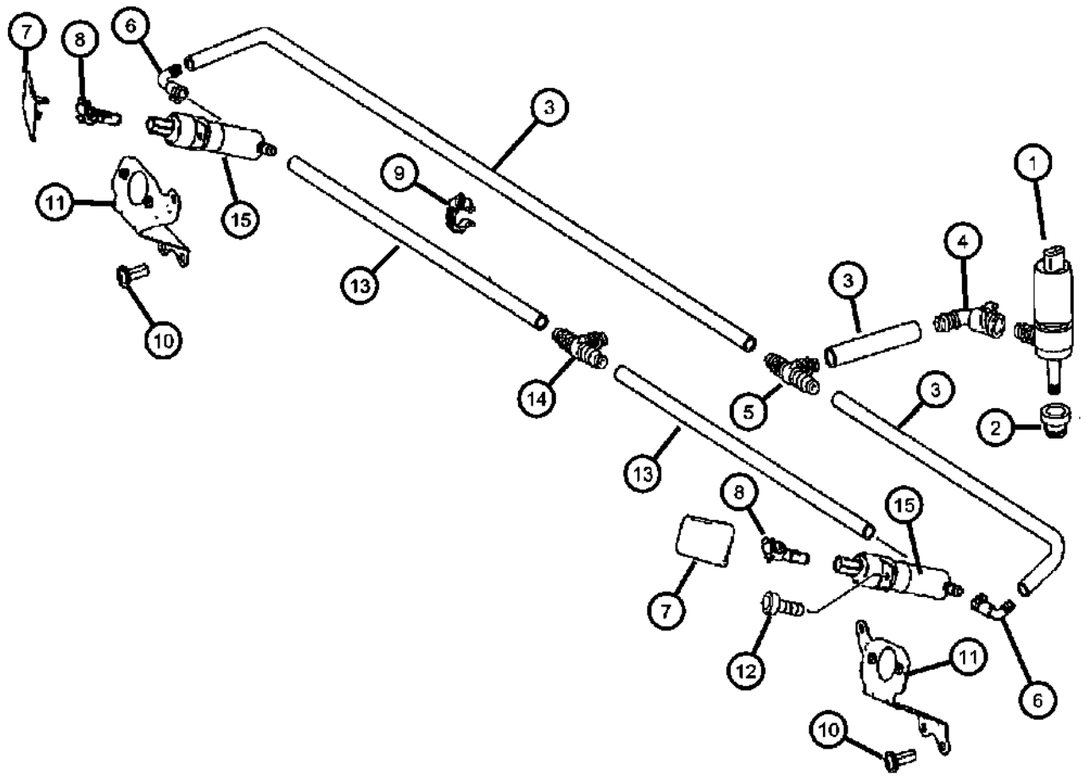

ITEM	PART NUMBER	QTY	LINE	SERIES	BODY	ENGINE	TRANS	TRIM	DESCRIPTION
1	68017448AA	1	2, 3, 6, 7						PUMP, Washer, Windshield, With [JHT]
2	68017449AA	1	2, 3, 6, 7						GROMMET, With [JHT]
3	68017467AA	900	2, 3, 6, 7						HOSE, Washer, Headlamp, With [JHT]
4	68017470AA	1	2, 3, 6, 7						FITTING, With [JHT]
5	68017468AA	1	2, 3, 6, 7						FITTING, [T] Fitting / With [JHT]
6	68017469AA	2	7, 2, 3, 6						FITTINGRight & Left, Elbow Attaching
7									COVER
	68017472AA	1	2, 3, 6, 7						With [JHT], Left
	68017473AA	1	2, 3, 6, 7						With [JHT], Right
8									NOZZLE, Washer, Headlamp
	68017464AA	1	2, 3, 6, 7						With [JHT], Right
	68017465AA	1	2, 3, 6, 7						With [JHT], Left
9	68017471AA	5	2, 3, 6, 7						RETAINER, With [JHT]
10	06104643AA	6	2, 3, 6, 7						SCREW, With [JHT] / Bracket Mounting
11									BRACKET
	68017475AA	1	2, 3, 6, 7						With [JHT], Left
	68017476AA	1	2, 3, 6, 7						With [JHT], Right
12									SCREW, Hex Head, M6x12
	06104120AA	4	3, 7		03, 05				
		4	2, 3, 6, 7		13, 15, 17, 53, 55				
13	05133997AA	1	2, 3, 6, 7						HOSE, Washer, Headlamp, [10x16 MM] With [JHT]
14									CONNECTOR, Washer Hose, T
	05125060AA	1	3, 7		03, 05				With [JHT]
		1	2, 3, 6, 7		13, 15, 17, 53, 55				With [JHT]
15	68017474AA	2	2, 3, 6, 7						NOZZLE, Washer, Headlamp, TELESCOPIC NOZZLE

SPRINTER (VB)

SERIES	LINE	BODY	ENGINE	TRANSMISSION
L = LOWLINE	3 = HD DODGE 2WD 2 = Med. Duty DODGE 2WD	03 = CAB CHASSIS WHEEL BASE 3 05 = CAB CHASSIS WHEEL BASE 5 13 = 119 WB 53 = 119 WB 15 = VAN WHEEL BASE 5 55 = WAGON WHEEL BASE 5 17 = VAN WHEEL BASE 7	EG2 = 3.5L V6 Gas Engine EXM = 3.0L V6 Turbo Diesel Engine	DGZ = 5-Speed Auto W5A380 Transmission

Group - 24

Air Conditioning & Heater

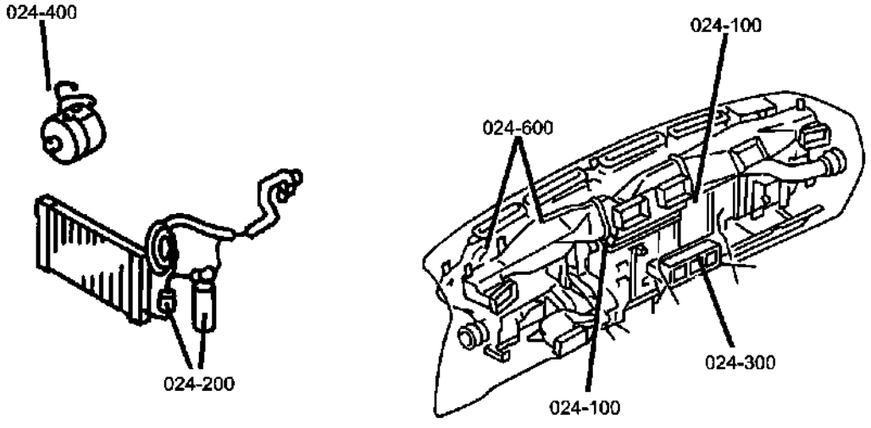

024-100 Air Conditioner and Heater Units 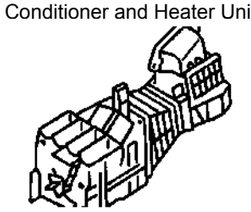	**024-200** Air Conditioner and Heater Plumbing 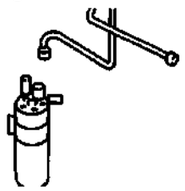	**024-300** Air Conditioner and Heater Controls 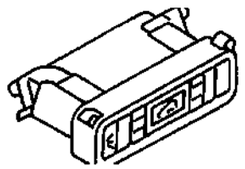	**024-400** Air Conditioning Compressor 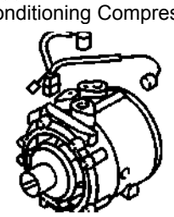
024-600 Air Ducts and Outlets 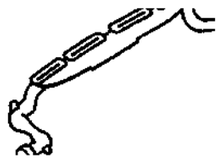			

Group - 24 Air Conditioning & Heater

Illustration Title — Group-Fig. No.

Air Conditioner and Heater Units
Ventilation Case ..... Fig. 24 - 110
Heater Housing/AC with Blower ..... Fig. 24 - 120
Heat Exchange ..... Fig. 24 - 125
Condenser & Auxiliary Fan ..... Fig. 24 - 130
Roof Mounted Ventilator ..... Fig. 24 - 135
Air Conditioner on Roof ..... Fig. 24 - 140
Air Conditioner on Roof ..... Fig. 24 - 145
Air Conditioner on Roof ..... Fig. 24 - 180
Rear A/C Condensed Water Lines ..... Fig. 24 - 190

Air Conditioner and Heater Plumbing
Rear A/C Condensed Water Drain ..... Fig. 24 - 205
Auxiliary Warm Water Heater Mounting / Cargo & Passenger Van ..... Fig. 24 - 210
Auxiliary Warm Water Heater Mounting / Cab Chassis ..... Fig. 24 - 215
Auxiliary Warm Water Heater Service Parts ..... Fig. 24 - 220
Heater Lines ..... Fig. 24 - 225
Heater Lines ..... Fig. 24 - 230
Refrigerant Lines / Chassis Cab ..... Fig. 24 - 235
Refrigerant Lines / Cargo / Passenger Van ..... Fig. 24 - 240
Refrigerant Line Routing/Rear A/C ..... Fig. 24 - 245
Refrigerant Lines / Rear Air Conditioner ..... Fig. 24 - 250

Air Conditioner and Heater Controls
Air Conditioner & Heater Control ..... Fig. 24 - 310

Air Conditioning Compressor
A/C Compressor ..... Fig. 24 - 405

Air Ducts and Outlets
Air Ducting ..... Fig. 24 - 610
Air Duct to Floor / Cargo / Passenger Van ..... Fig. 24 - 640
Air Ducts With Rear Air Conditioner ..... Fig. 24 - 650

Ventilation Case
Figure 24-110

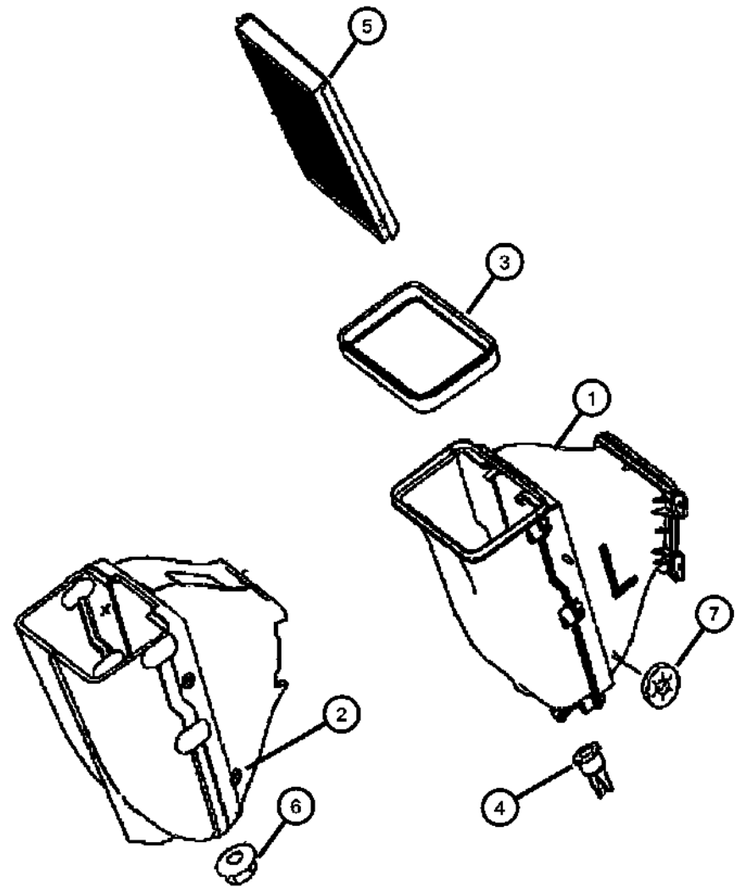

ITEM	PART NUMBER	QTY	LINE	SERIES	BODY	ENGINE	TRANS	TRIM	DESCRIPTION
1	68012873AA	1	2, 3, 6, 7			EG2, EXM			HOUSING
2	68012874AA	1	2, 3, 6, 7			EG2, EXM			INSULATION
3	68012875AA	1	2, 3, 6, 7			EG2, EXM			SEAL
4									TUBE, Wiper Drain Module
	05101626AA	1	2, 3, 6, 7		13, 15, 17, 53, 55	EG2, EXM			
		1	3, 7		03, 05	EG2, EXM			
5	68012876AA	1	2, 3, 6, 7			EG2, EXM			FILTER, A/C and Heater Unit
6									NUT
	68004878AA	1	3, 7		03, 05	EG2, EXM			
		1	6, 7, 2, 3		13, 15, 17, 53, 55	EG2, EXM			
7	68012878AA	4	2, 3, 6, 7			EG2, EXM			WASHER, Lock

SPRINTER (VB)

SERIES	LINE	BODY	ENGINE	TRANSMISSION
L = LOWLINE	3 = HD DODGE 2WD 2 = Med. Duty DODGE 2WD	03 = CAB CHASSIS WHEEL BASE 3 05 = CAB CHASSIS WHEEL BASE 5 13 = 119 WB 53 = 119 WB 15 = VAN WHEEL BASE 5 55 = WAGON WHEEL BASE 5 17 = VAN WHEEL BASE 7	EG2 = 3.5L V6 Gas Engine EXM = 3.0L V6 Turbo Diesel Engine	DGZ = 5-Speed Auto W5A380 Transmission

Heater Housing/AC with Blower
Figure 24-120

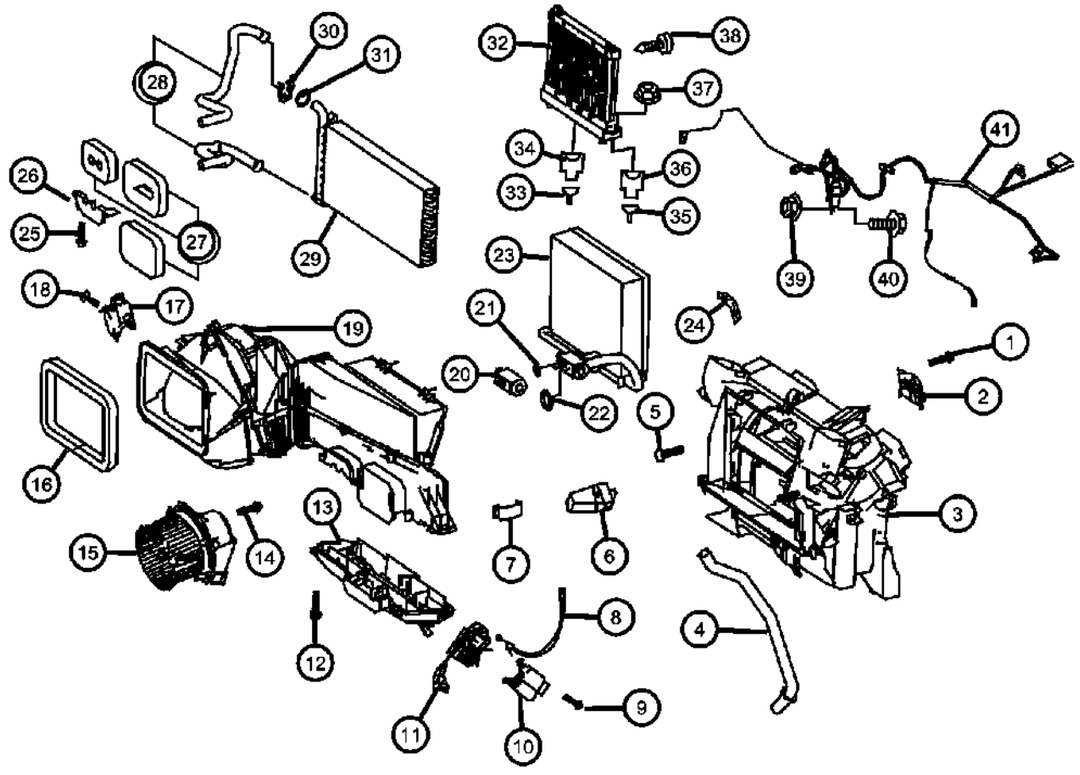

ITEM	PART NUMBER	QTY	LINE	SERIES	BODY	ENGINE	TRANS	TRIM	DESCRIPTION
1	68012630AA	2	2, 3, 6, 7			EG2, EXM			SCREW, 4x18
2	68012668AA	1	2, 3, 6, 7			EG2, EXM			ACTUATOR, A/C and Heater
3	68012673AA	1	6, 7, 2, 3			EG2, EXM			HOUSING, A/C And Heater
4	68012666AA	1	2, 3, 6, 7			EG2, EXM			HOSE, Drain
5	68012630AA	2	2, 3, 6, 7			EG2, EXM			SCREW, At Heater Case 4x18
6	68012613AA	1	2, 3, 6, 7			EG2, EXM			RESISTOR, Blower Motor
7	05133592AA	21	2, 3, 6, 7		13, 15, 17, 53, 55	EG2, EXM			CLIP, HEATER
8	68012667AA	1	2, 3, 6, 7			EG2, EXM			CABLE, A/C And Heater Control
9	68012630AA	2	2, 3, 6, 7			EG2, EXM			SCREW, Engine Fixing 4x16
10	68012669AA	1	2, 3, 6, 7			EG2, EXM			ACTUATOR, A/C and Heater
11	68012671AA	1	2, 3, 6, 7			EG2, EXM			LEVER, Panel Door
12	68012630AA	6	2, 3, 6, 7		13, 15, 17, 53, 55	EG2, EXM			SCREW, Mounting Shell 4x16
13	68012674AA	1	2, 3, 6, 7			EG2, EXM			COVER, Module
14	68012630AA	1	2, 3, 6, 7		13, 15, 17, 53, 55	EG2, EXM			SCREW, Fan Fastening 4x16
15	68012680AA	1	2, 3, 6, 7			EG2, EXM			MOTOR, Blower with Wheel
16	68012687AA	1	2, 3, 6, 7			EG2, EXM			GASKET
17	68012678AA	1	7, 2, 3, 6			EXM, EG2			ACTUATOR
18	68012630AA	2	2, 3, 6, 7			EG2, EXM			SCREW, Engine Fixing 4x16
19	68012676AA	1	2, 3, 6, 7			EG2, EXM			HOUSING, Heater
20	68012686AA	1	2, 3, 6, 7			EG2, EXM			VALVE, Expansion
21	05103930AA	1	2, 3, 6, 7		13, 15, 17, 53, 55	EG2, EXM			O RING, A/C Line, 17x2MM
22									O RING, A/C Line
	05098971AA	1	2, 3, 6, 7		13, 15, 17, 53, 55	EG2, EXM			10.6x2MM
		1	3, 7		03, 05	EG2, EXM			10.6x2MM
23	68012685AA	1	2, 3, 6, 7			EG2, EXM			EVAPORATOR, Air Conditioning
24									SENSOR, Temperature
	05103937AB	1	2, 3, 6, 7		13, 15, 17, 53, 55	EG2, EXM			
		1	3, 7		03, 05	EG2, EXM			
25	68012630AA	2	2, 3, 6, 7		13, 15, 17, 53, 55	EG2, EXM			SCREW, Bracket Mounting 4x16

SPRINTER (VB)

SERIES	LINE	BODY	ENGINE	TRANSMISSION
L = LOWLINE	3 = HD DODGE 2WD 2 = Med. Duty DODGE 2WD	03 = CAB CHASSIS WHEEL BASE 3 05 = CAB CHASSIS WHEEL BASE 5 13 = 119 WB 53 = 119 WB 15 = VAN WHEEL BASE 5 55 = WAGON WHEEL BASE 5 17 = VAN WHEEL BASE 7	EG2 = 3.5L V6 Gas Engine EXM = 3.0L V6 Turbo Diesel Engine	DGZ = 5-Speed Auto W5A380 Transmission

AR = use ase required - = Non illustrrated part

<< RETURN TO GROUP INDEX

Heater Housing/AC with Blower
Figure 24-120

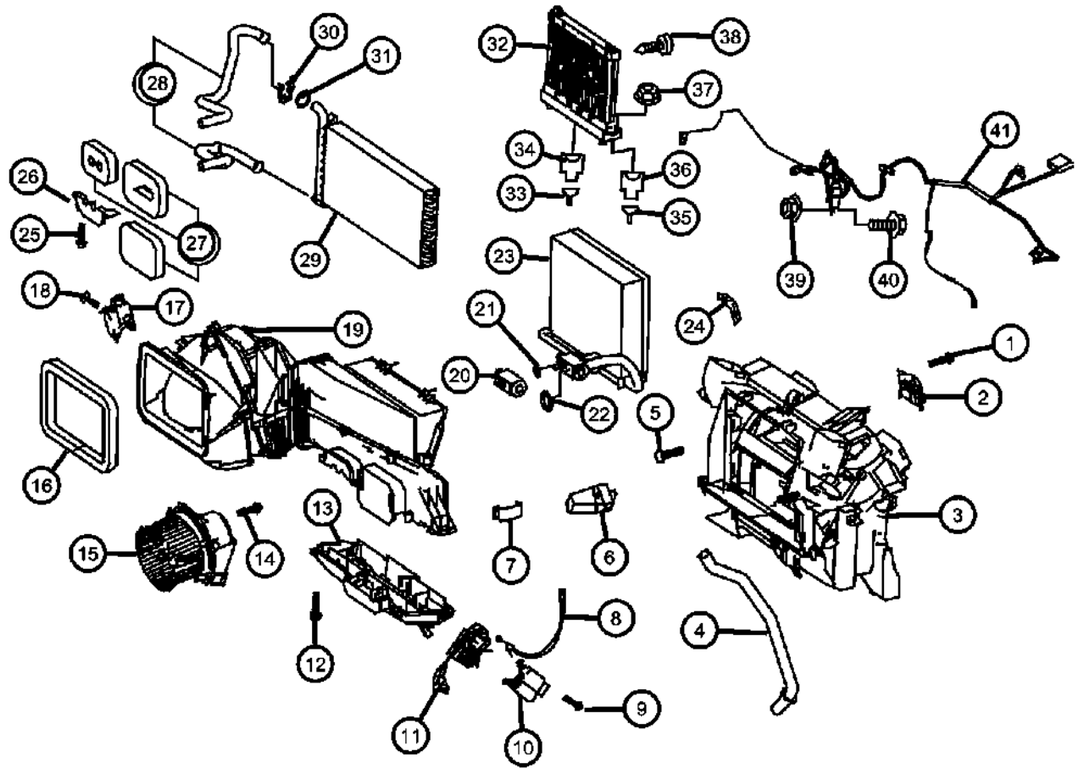

ITEM	PART NUMBER	QTY	LINE	SERIES	BODY	ENGINE	TRANS	TRIM	DESCRIPTION
26	68012684AA	1	2, 3, 6, 7			EG2, EXM			BRACKET
27	68012677AA	1	2, 3, 6, 7			EG2, EXM			SEAL, Heater Core
28	68012683AA	1	2, 3, 6, 7			EG2, EXM			HOSE, Heater
29	68012682AA	1	2, 3, 6, 7			EG2, EXM			CORE, Heater
30	68012619AA	2	2, 3, 6, 7			EG2, EXM			CLIP, Pipe Line to Heater Case
31	68012624AA	2	2, 3, 6, 7			EG2, EXM			O RING, Heating Pipe Lines
32	68012665AA	1	2, 3, 6, 7			EG2, EXM			HEATER
33	05103874AA	1	2, 3, 6, 7			EG2, EXM			TERMINAL
34	68011286AA	1	2, 3, 6, 7			EG2, EXM			CONNECTOR
35	05103874AA	1	2, 3, 6, 7			EG2, EXM			TERMINAL
36	05120277AA	1	2, 3, 6, 7			EG2, EXM			CONNECTOR, Wiring Repair
37	06105169AA	2	2, 3, 6, 7			EG2, EXM			NUT
38	68012630AA	2	2, 3, 6, 7		13, 15, 17, 53, 55	EG2, EXM			SCREW, Control Unit Fixture 4x16
39	68004878AA	3	2, 3, 6, 7		13, 15, 17, 53, 55	EG2, EXM			NUT, Attachment for Heater M6
40	05133476AB	2	2, 3, 6, 7		13, 15, 17, 53, 55	EG2, EXM			SCREW, Attachment for Heater M6x20
41	68012689AA	1	2, 3, 6, 7			EG2, EXM			WIRING, A/C and HEATER

SPRINTER (VB)

SERIES	LINE	BODY	ENGINE	TRANSMISSION
L = LOWLINE	3 = HD DODGE 2WD 2 = Med. Duty DODGE 2WD	03 = CAB CHASSIS WHEEL BASE 3 05 = CAB CHASSIS WHEEL BASE 5 13 = 119 WB 53 = 119 WB 15 = VAN WHEEL BASE 5 55 = WAGON WHEEL BASE 5 17 = VAN WHEEL BASE 7	EG2 = 3.5L V6 Gas Engine EXM = 3.0L V6 Turbo Diesel Engine	DGZ = 5-Speed Auto W5A380 Transmission

AR = use ase required - = Non illustrrated part

<< RETURN TO GROUP INDEX

Heat Exchange
Figure 24-125

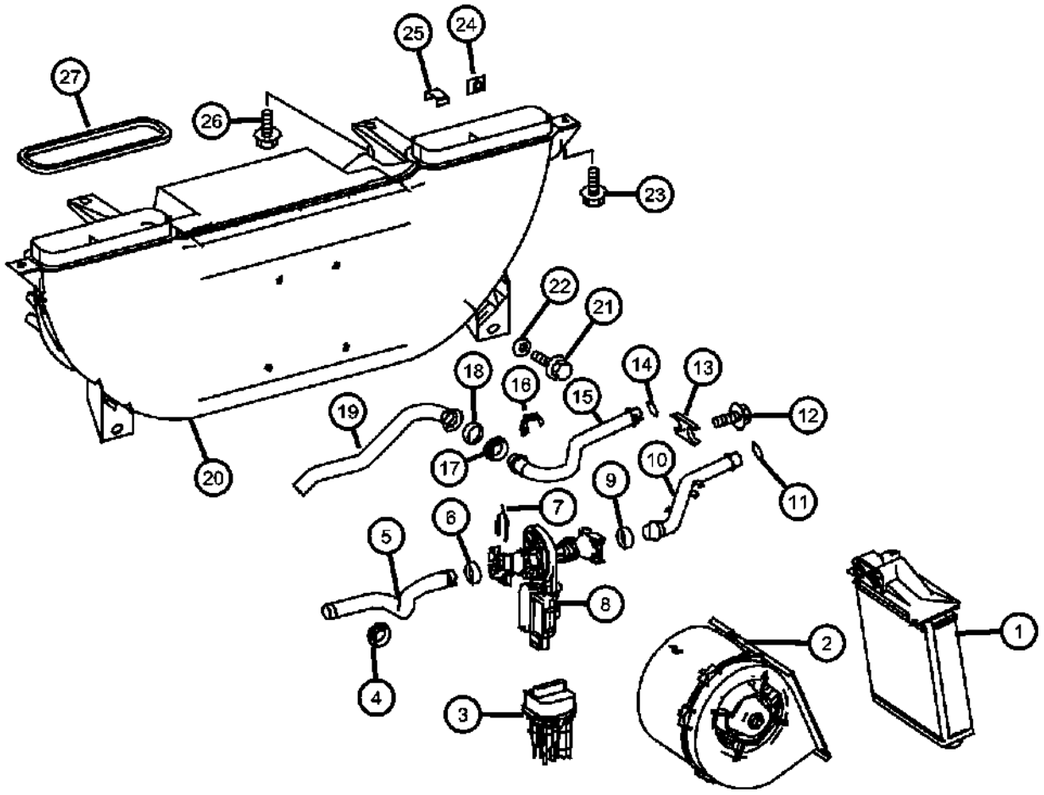

ITEM	PART NUMBER	QTY	LINE	SERIES	BODY	ENGINE	TRANS	TRIM	DESCRIPTION
1	68012614AA	1	2, 3, 6, 7		13, 15, 17, 53, 55	EG2, EXM			CORE, Heater
2	05103806AA	1	2, 3, 6, 7		13, 15, 17, 53, 55	EG2, EXM			BLOWER
3	68012613AA	1	2, 3, 6, 7			EG2, EXM			RESISTOR, Blower Motor
4	05133588AA	2	3, 6, 7, 2		13, 15, 17, 53, 55	EG2, EXM			GROMMET
5	68012618AA	1	2, 3, 6, 7		13, 15, 17, 53, 55	EG2, EXM			HOSE, Heater, Return from Valve
6	68012624AA	1	2, 3, 6, 7		13, 15, 17, 53, 55	EG2, EXM			O RING, At Control Valve
7	05098481AA	2	2, 3, 6, 7		13, 15, 17, 53, 55	EG2, EXM			RETAINER, Spring
8	68012622AA	1	2, 3, 6, 7		13, 15, 17, 53, 55	EG2, EXM			VALVE, Regulating Valve
9	68012624AA	2	2, 3, 6, 7			EG2, EXM			O RING, At Control Valve
10	68012617AA	1	2, 3, 6, 7		13, 15, 17, 53, 55	EG2, EXM			HOSE, Heater, Return from Heat Exchanger
11	68012623AA	2	2, 3, 6, 7		13, 15, 17, 53, 55	EG2, EXM			O RING, Heater
12	68012621AA	1	2, 3, 6, 7		13, 15, 17, 53, 55	EG2, EXM			SCREW
13	68012620AA	1	2, 3, 6, 7		53, 55, 13, 15, 17	EG2, EXM			BRACKET
14	68012623AA	2	2, 3, 6, 7		13, 15, 17, 53, 55	EG2, EXM			O RING
15	68012616AA	1	2, 3, 6, 7		13, 15, 17, 53, 55	EG2, EXM			HOSE, Heater, Partition Point to Heater
16	68012619AA	1	2, 3, 6, 7		13, 15, 17, 53, 55	EG2, EXM			CLIP, Pipe Lines
17	05133588AA	2	2, 3, 6, 7		13, 15, 17, 53, 55	EG2, EXM			GROMMET
18	68012624AA	2	6, 7, 2, 3			EG2, EXM			O RING
19	68012615AA	1	2, 3, 6, 7		13, 15, 17, 53, 55	EG2, EXM			HOSE, Heater, Feed
20	68012611AA	1	2, 3, 6, 7		13, 15, 17, 53, 55	EG2, EXM			HOUSING, Heater, Additional Heater
21	06104121AA	2	2, 3, 6, 7		13, 15, 17, 53, 55	EG2, EXM			SCREW, Hex Flange Head, Mounting to Longitudinal Member Bottom M6x16
22	68012612AA	2	2, 3, 6, 7			EG2, EXM			WASHER, With [HDC]
23	06104580AA	2	2, 3, 6, 7		13, 15, 17, 53, 55	EG2, EXM			SCREW, Tapping, Heating to Cross Member 6.3x13

SPRINTER (VB)

SERIES	LINE	BODY	ENGINE	TRANSMISSION
L = LOWLINE	3 = HD DODGE 2WD 2 = Med. Duty DODGE 2WD	03 = CAB CHASSIS WHEEL BASE 3 05 = CAB CHASSIS WHEEL BASE 5 13 = 119 WB 53 = 119 WB 15 = VAN WHEEL BASE 5 55 = WAGON WHEEL BASE 5 17 = VAN WHEEL BASE 7	EG2 = 3.5L V6 Gas Engine EXM = 3.0L V6 Turbo Diesel Engine	DGZ = 5-Speed Auto W5A380 Transmission

Heat Exchange
Figure 24-125

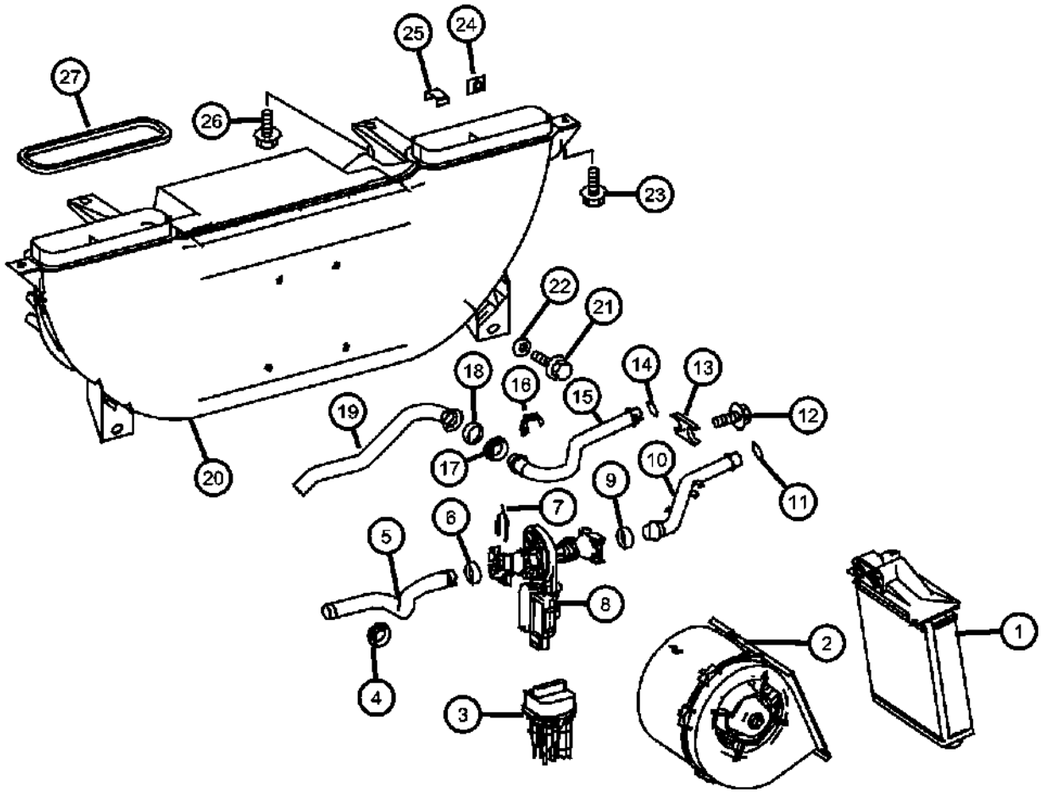

ITEM	PART NUMBER	QTY	LINE	SERIES	BODY	ENGINE	TRANS	TRIM	DESCRIPTION
24	68011920AA	1	2, 3, 6, 7			EG2			RETAINER, Plug Connections
25	05133592AA	21	2, 3, 6, 7		13, 15, 17, 53, 55	EG2, EXM			CLIP, HEATER, Cover to Box
26									SCREW
	05073723AB	2	3, 7		03, 05	EG2, EXM			Heating to Stay M8x20
		2	2, 3, 6, 7		13, 15, 17, 53, 55	EG2, EXM			Heating to Stay M8x20
27	05133593AA	2	2, 3, 6, 7		17, 53, 55, 13, 15	EG2, EXM			GASKET, Heater duct, Intake Air Duct
-28	05133486AA	2	2, 3, 6, 7		13, 15, 17, 53, 55	EG2, EXM			RIVET, Heating to Cross Member

SPRINTER (VB)

SERIES	LINE	BODY	ENGINE	TRANSMISSION
L = LOWLINE	3 = HD DODGE 2WD 2 = Med. Duty DODGE 2WD	03 = CAB CHASSIS WHEEL BASE 3 05 = CAB CHASSIS WHEEL BASE 5 13 = 119 WB 53 = 119 WB 15 = VAN WHEEL BASE 5 55 = WAGON WHEEL BASE 5 17 = VAN WHEEL BASE 7	EG2 = 3.5L V6 Gas Engine EXM = 3.0L V6 Turbo Diesel Engine	DGZ = 5-Speed Auto W5A380 Transmission

Condenser & Auxiliary Fan
Figure 24-130

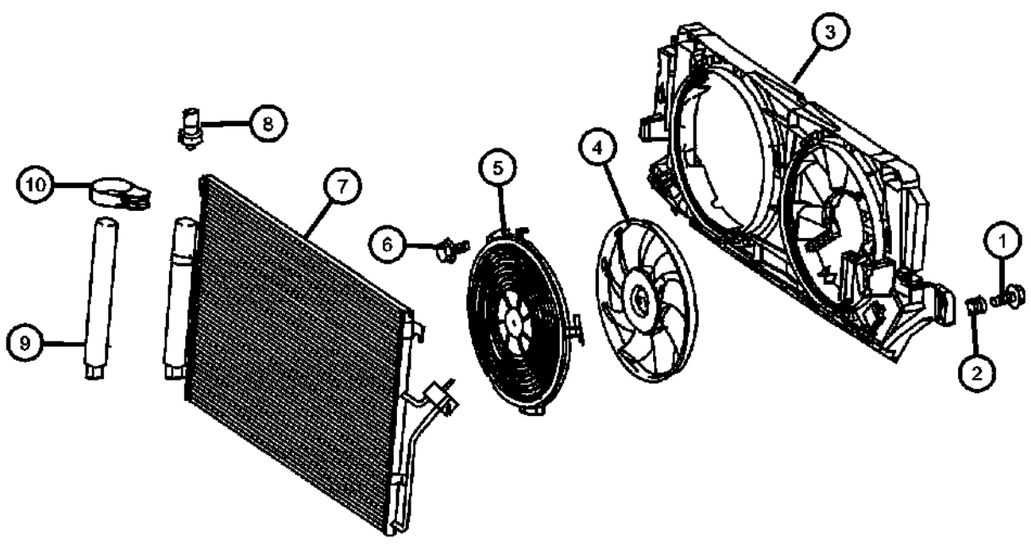

ITEM	PART NUMBER	QTY	LINE	SERIES	BODY	ENGINE	TRANS	TRIM	DESCRIPTION
1	68006685AA	4	2, 3, 6, 7			EG2, EXM			SCREW, Protective Grille to Radiator 5x16
2	68013663AA	4	2, 3, 6, 7			EG2, EXM			BUSHING, At Condenser
3									SHROUD, Fan
	68013664AA	1	2, 3, 6, 7		13, 15, 17	EG2, EXM			With [HAB+(CWC%XJW%XJ1%XJY]
		1	3, 7		03, 05	EG2, EXM			With [HAB]
	68013671AA	1	2, 3, 6, 7		13, 15, 17, 53, 55	EG2, EXM			With [HAB]
4									FAN
	68013666AA	1	2, 3, 6, 7		13, 15, 17	EG2, EXM			With Single & Dual Fan Set Up, Left
		1	3, 7		03, 05	EG2, EXM			With Single & Dual Fan Set Up, Left
	68013672AA	1	2, 3, 6, 7		13, 15, 17, 53, 55	EG2, EXM			With Dual Set Up Only, Right
5									GRILLE
	68013665AA	1	2, 3, 6, 7		13, 15, 17	EG2, EXM			With Single Fan
		1	3, 7		03, 05	EG2, EXM			With Single Fan
		2	2, 3, 6, 7		13, 15, 17, 53, 55	EG2, EXM			With Dual Fan
6	68013667AA	3	2, 3, 6, 7			EG2, EXM			SCREW, Blower to Protective Grille
7	68013633AA	1	2, 3, 6, 7			EG2, EXM			CONDENSER, A/C
8	68019266AA	1	2, 3, 6, 7			EG2, EXM			SWITCH, A/C Pressure
9	68013634AA	1	2, 3, 6, 7			EG2, EXM			RECEIVER DRIER
10	68013635AA	1	2, 3, 6, 7			EG2, EXM			BRACKET, Drying Insert

SPRINTER (VB)

SERIES	LINE	BODY	ENGINE	TRANSMISSION
L = LOWLINE	3 = HD DODGE 2WD 2 = Med. Duty DODGE 2WD	03 = CAB CHASSIS WHEEL BASE 3 05 = CAB CHASSIS WHEEL BASE 5 13 = 119 WB 53 = 119 WB 15 = VAN WHEEL BASE 5 55 = WAGON WHEEL BASE 5 17 = VAN WHEEL BASE 7	EG2 = 3.5L V6 Gas Engine EXM = 3.0L V6 Turbo Diesel Engine	DGZ = 5-Speed Auto W5A380 Transmission

Roof Mounted Ventilator
Figure 24-135

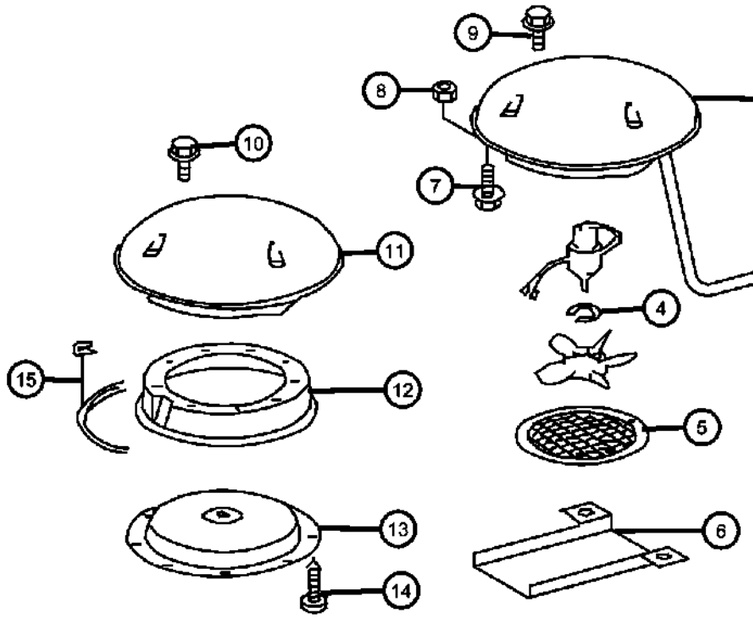

ITEM	PART NUMBER	QTY	LINE	SERIES	BODY	ENGINE	TRANS	TRIM	DESCRIPTION
1	05103696AA	1	2, 3, 6, 7		13, 15, 17	EG2, EXM			FAN
2	05103751AA	2	2, 3, 6, 7		13, 15, 17, 53, 55	EG2, EXM			CONNECTOR
3	05103754AA	1	2, 3, 6, 7			EG2, EXM			INSULATOR, 2 Way Female
4	05103696AA	1	2, 3, 6, 7		13, 15, 17	EG2, EXM			FAN
5	05133638AA	1	2, 3, 6, 7		13, 15, 17, 53, 55	EG2, EXM			GRILLE, Vent
6	05124790AA	1	2, 3, 6, 7		13, 15, 17, 53, 55	EG2, EXM			COVER, Bracket
7	05135207AA	9	2, 3, 6, 7		17, 53, 55, 13, 15	EG2, EXM			SCREW
8	05098361AA	9	2, 3, 6, 7		13, 15, 17, 53, 55	EG2, EXM			NUT, Hex
9	05126198AA	9	2, 3, 6, 7		13, 15, 17, 53, 55	EG2, EXM			BOLT, M6x20
10	05135207AA	9	2, 3, 6, 7		13, 15, 17, 53, 55	EG2, EXM			SCREW
11	05134596AA	1	6, 7, 2, 3		13, 15, 17, 53, 55	EG2, EXM			EXHAUSTER, Interior Trim Panel
12	05134597AA	1	2, 3, 6, 7		13, 15, 17, 53, 55	EG2, EXM			RETAINER
13	05134600AA	1	2, 3, 6, 7		13, 15, 17, 53, 55	EG2, EXM			EXHAUSTER, Interior Trim Panel
14	05126095AA	6	2, 3, 6, 7		13, 15, 17, 53, 55	EG2, EXM			SCREW, Tapping
15	05135206AA	200	2, 3, 6, 7		13, 15, 17, 53, 55	EG2, EXM			WEATHERSTRIP

SPRINTER (VB)

SERIES	LINE	BODY	ENGINE	TRANSMISSION
L = LOWLINE	3 = HD DODGE 2WD 2 = Med. Duty DODGE 2WD	03 = CAB CHASSIS WHEEL BASE 3 05 = CAB CHASSIS WHEEL BASE 5 13 = 119 WB 53 = 119 WB 15 = VAN WHEEL BASE 5 55 = WAGON WHEEL BASE 5 17 = VAN WHEEL BASE 7	EG2 = 3.5L V6 Gas Engine EXM = 3.0L V6 Turbo Diesel Engine	DGZ = 5-Speed Auto W5A380 Transmission

Air Conditioner on Roof
Figure 24-140

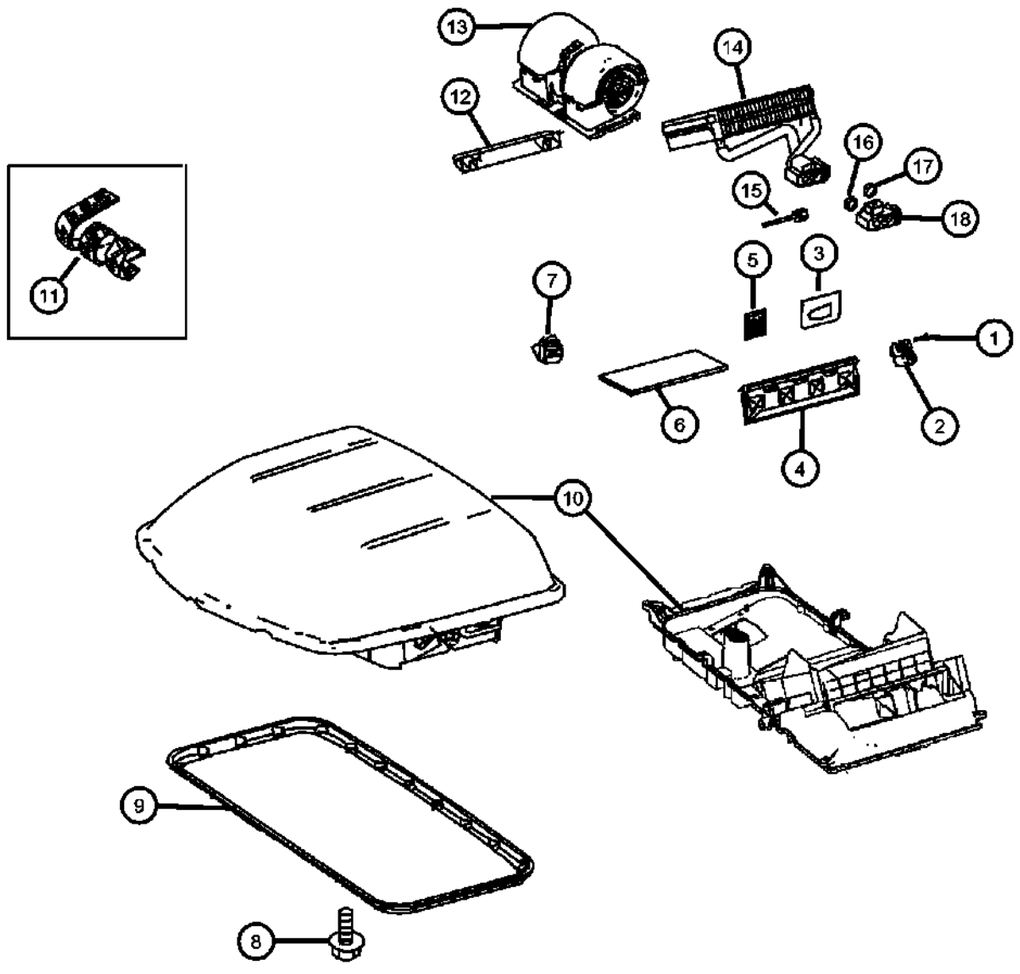

ITEM	PART NUMBER	QTY	LINE	SERIES	BODY	ENGINE	TRANS	TRIM	DESCRIPTION
1	68012630AA	3	2, 3, 6, 7		13, 15, 17, 53, 55	EG2, EXM			SCREW, Engine Fixing 4x16
2	68012629AA	1	2, 6		53, 55	EG2, EXM			MOTOR
3	68012636AA	1	2, 6		53, 55	EG2, EXM			SEAL, Lateral
4	68012639AA	1	2, 6		53, 55	EG2, EXM			DOOR, Air Mixing Flap
5	68011920AA	2	2, 3, 6, 7		13, 15, 17, 53, 55	EG2, EXM			RETAINER, Plug Connection
6	68012628AA	1	2, 6		53, 55	EG2, EXM			FILTER, Air
7	68012613AA	1	2, 3, 6, 7			EG2, EXM			RESISTOR, Blower Motor
8	06104118AA	22	2, 3, 6, 7		13, 15, 17, 53, 55	EG2, EXM			SCREW, Frame Bracket M5x20
9	68012609AA	1	2, 6		53, 55	EG2, EXM			FRAME
10	68012608AA	1	2, 6		53, 55	EG2, EXM			HOUSING, Serviced as an Assembly
11	05132378AA	60	2, 3, 6, 7		13, 15, 17, 53, 55	EG2, EXM			ISOLATOR
12	68012638AA	1	2, 6		53, 55	EG2, EXM			DOOR
13	68012631AA	1	2, 6		53, 55	EG2, EXM			MOTOR, Blower with Wheel
14	68012632AA	1	2, 6		53, 55	EG2, EXM			EVAPORATOR, Air Conditioning
15	68012635AA	1	2, 6		53, 55	EG2, EXM			SENSOR, Temperature
16	05103930AA	1	2, 3, 6, 7		13, 15, 17, 53, 55	EG2, EXM			O RING, A/C Line
17	05098971AA	1	2, 3, 6, 7		13, 15, 17, 53, 55	EG2, EXM			O RING, A/C Line
18	68012634AA	1	2, 6		53, 55				VALVE, Expansion

SPRINTER (VB)

SERIES	LINE	BODY	ENGINE	TRANSMISSION
L = LOWLINE	3 = HD DODGE 2WD 2 = Med. Duty DODGE 2WD	03 = CAB CHASSIS WHEEL BASE 3 05 = CAB CHASSIS WHEEL BASE 5 13 = 119 WB 53 = 119 WB 15 = VAN WHEEL BASE 5 55 = WAGON WHEEL BASE 5 17 = VAN WHEEL BASE 7	EG2 = 3.5L V6 Gas Engine EXM = 3.0L V6 Turbo Diesel Engine	DGZ = 5-Speed Auto W5A380 Transmission

Air Conditioner on Roof
Figure 24-145

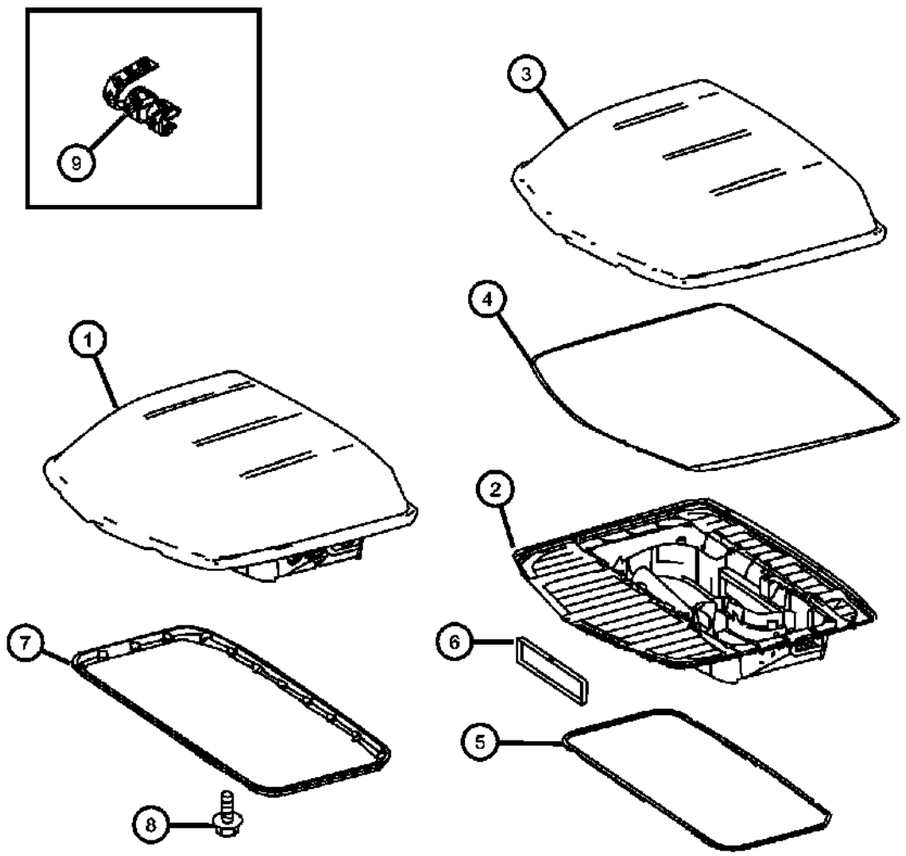

ITEM	PART NUMBER	QTY	LINE	SERIES	BODY	ENGINE	TRANS	TRIM	DESCRIPTION
1	68012608AA	1	2, 6		53, 55	EG2, EXM			HOUSING, Complete Housing
2	68024096AA	1	2, 6		53, 55	EG2, EXM			CONDENSER, A/C, Lower Cover
3	68012627AA	1	2, 6		53, 55	EG2, EXM			HOUSING, Upper Cover
4	68012640AA	1	2, 6		53, 55	EG2, EXM			FRAME, Seal
5	68012637AA	1	2, 6		53, 55	EG2, EXM			SEAL
6	68012641AA	1	2, 6		53, 55	EG2, EXM			FRAME, Seal, Air Outlet
7	68012609AA	1	2, 6		53, 55	EG2, EXM			FRAME, A/C Unit Seat
8	06104118AA	22	2, 3, 6, 7		13, 15, 17, 53, 55	EG2, EXM			SCREW, Torx, M5X0.8X20
9	05132378AA	60	2, 3, 6, 7		13, 15, 17, 53, 55	EG2, EXM			ISOLATOR

SPRINTER (VB)

SERIES	LINE	BODY	ENGINE	TRANSMISSION
L = LOWLINE	3 = HD DODGE 2WD 2 = Med. Duty DODGE 2WD	03 = CAB CHASSIS WHEEL BASE 3 05 = CAB CHASSIS WHEEL BASE 5 13 = 119 WB 53 = 119 WB 15 = VAN WHEEL BASE 5 55 = WAGON WHEEL BASE 5 17 = VAN WHEEL BASE 7	EG2 = 3.5L V6 Gas Engine EXM = 3.0L V6 Turbo Diesel Engine	DGZ = 5-Speed Auto W5A380 Transmission

Air Conditioner on Roof
Figure 24-180

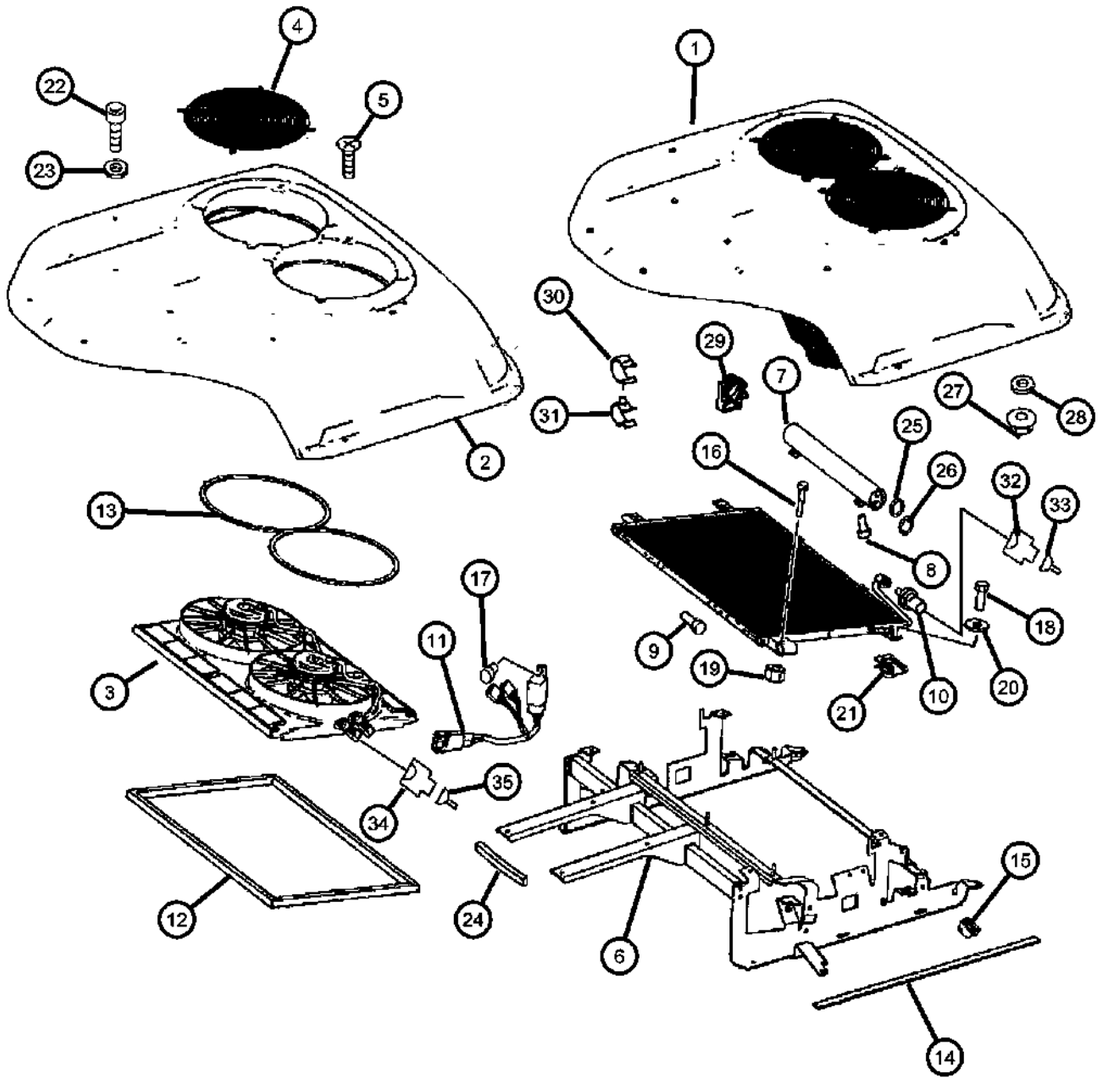

ITEM	PART NUMBER	QTY	LINE	SERIES	BODY	ENGINE	TRANS	TRIM	DESCRIPTION
1	68012610AA	1	2, 6		53, 55	EG2, EXM			CONDENSER, A/C, Complete Unit
2	68012642AA	1	2, 6		53, 55	EG2, EXM			COVER, Cover Only
3	68012643AA	1	2, 6		53, 55	EG2, EXM			MODULE, Cooling
4	68012644AA	2	2, 6		53, 55	EG2, EXM			GRILLE
5	68012645AA	8	2, 6		53, 55	EG2, EXM			SCREW
6	68012646AA	1	2, 6		53, 55	EG2, EXM			CONDENSER, A/C, Frame
7	68012647AA	1	2, 6		53, 55	EG2, EXM			DRIER, Air Conditioning Filter
8	68012648AA	2	2, 6		53, 55	EG2, EXM			SCREW
9	06104123AA	4	2, 3, 6, 7		13, 15, 17, 53, 55	EG2, EXM			SCREW
10	68012649AA	1	2, 3, 6, 7			EG2, EXM			SWITCH, A/C Pressure
11	68012650AA	1	2, 6		53, 55	EG2, EXM			WIRING
12	68012651AA	1	2, 6		53, 55	EG2, EXM			SEAL
13	68012652AA	2	2, 6		53, 55	EG2, EXM			SEAL
14	68012653AA	1	2, 6		53, 55	EG2, EXM			SEAL
15	68012654AA	2	2, 6		53, 55	EG2, EXM			CLIP
16	68012655AA	1	2, 6		53, 55	EG2, EXM			SCREW
17	05104672AA	1	2, 3, 6, 7		13, 15, 17, 53, 55	EG2, EXM			NUT, Hex
18	68012657AA	3	2, 6		53, 55	EG2, EXM			SCREW
19	68012656AA	1	2, 6		53, 55	EG2, EXM			NUT
20	05098108AA	4	2, 3, 6, 7		13, 15, 17, 53, 55	EG2, EXM			WASHER, Flat
21	68012658AA	3	2, 6		53, 55	EG2, EXM			NUT
22	68012659AA	10	2, 6		53, 55	EG2, EXM			SCREW
23	68012660AA	10	2, 6		53, 55	EG2, EXM			WASHER
24	68012661AA	1	2, 6		53, 55	EG2, EXM			SEAL
25	05098970AA	1	2, 3, 6, 7		13, 15, 17, 53, 55	EG2, EXM			O RING, A/C Line, [7.5 X 2 MM]
26	05103571AA	1	2, 3, 6, 7		53, 55	EG2, EXM			O RING, Air Conditioning Line, [9.5 X 2.5 MM]
27	06105169AA	6	2, 3, 6, 7		13, 15, 17, 53, 55	EG2, EXM			NUT
28	05142916AA	6	2, 3, 6, 7		53, 55, 13, 15, 17	EG2, EXM			WASHER
29	68012740AA	1	2, 3, 6, 7			EG2, EXM			BRACKET, Hose

SPRINTER (VB)

SERIES	LINE	BODY	ENGINE	TRANSMISSION
L = LOWLINE	3 = HD DODGE 2WD 2 = Med. Duty DODGE 2WD	03 = CAB CHASSIS WHEEL BASE 3 05 = CAB CHASSIS WHEEL BASE 5 13 = 119 WB 53 = 119 WB 15 = VAN WHEEL BASE 5 55 = WAGON WHEEL BASE 5 17 = VAN WHEEL BASE 7	EG2 = 3.5L V6 Gas Engine EXM = 3.0L V6 Turbo Diesel Engine	DGZ = 5-Speed Auto W5A380 Transmission

AR = use ase required - = Non illustrrated part

Air Conditioner on Roof
Figure 24-180

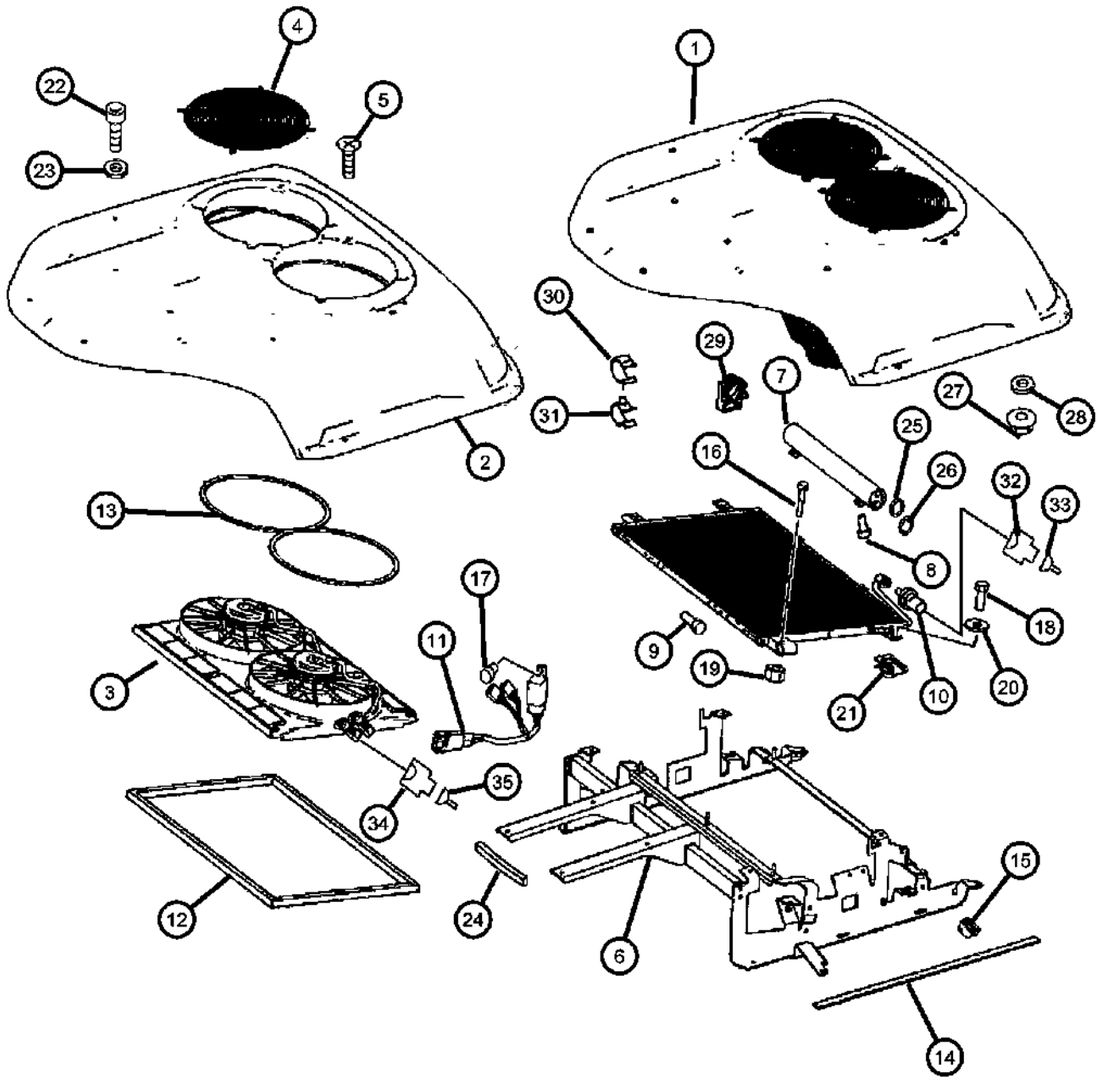

ITEM	PART NUMBER	QTY	LINE	SERIES	BODY	ENGINE	TRANS	TRIM	DESCRIPTION
30	06104923AA	1	2, 6		13, 15, 17, 53, 55	EG2			CLAMP, Hose
31	06104918AA	1	2, 6		13, 15, 17, 53, 55	EG2			CLAMP, Hose
32	05120278AA	1	2, 3, 6, 7			EG2			CONNECTOR
33	05103873AA	3	2, 3, 6, 7		13, 15, 17, 53, 55	EG2, EXM			TERMINAL
34	05120761AA	1	2, 3, 6, 7			EG2, EXM			CONNECTOR
35	68016721AA	AR	2, 3, 6, 7			EG2, EXM			TERMINAL

SPRINTER (VB)

SERIES	LINE	BODY	ENGINE	TRANSMISSION
L = LOWLINE	3 = HD DODGE 2WD 2 = Med. Duty DODGE 2WD	03 = CAB CHASSIS WHEEL BASE 3 05 = CAB CHASSIS WHEEL BASE 5 13 = 119 WB 53 = 119 WB 15 = VAN WHEEL BASE 5 55 = WAGON WHEEL BASE 5 17 = VAN WHEEL BASE 7	EG2 = 3.5L V6 Gas Engine EXM = 3.0L V6 Turbo Diesel Engine	DGZ = 5-Speed Auto W5A380 Transmission

Rear A/C Condensed Water Lines
Figure 24-190

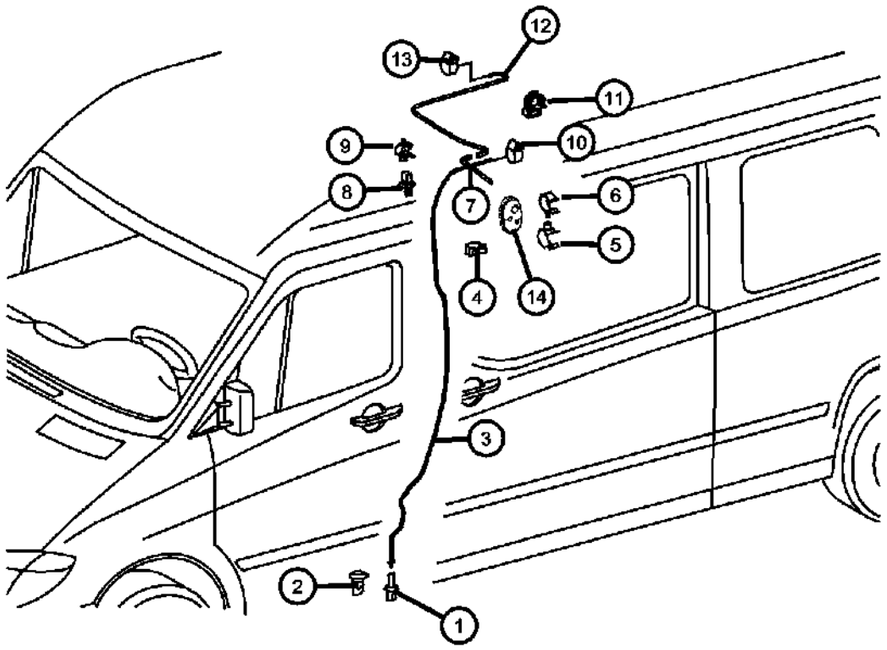

ITEM	PART NUMBER	QTY	LINE	SERIES	BODY	ENGINE	TRANS	TRIM	DESCRIPTION
1	68012795AA	1	2, 6		53, 55	EG2, EXM			HOSE, Drain
2	68012793AA	1	2, 6		53, 55	EG2, EXM			GROMMET
3	68012792AA	1	2, 3, 6, 7		53, 55	EG2, EXM			HOSE, Drain
4	06104775AA	11	2, 3, 6, 7		13, 15, 17, 53, 55	EG2, EXM			CLAMP, 6.5x14.5
5	06104921AA	1	2, 3, 6, 7		13, 15, 17, 53, 55	EG2, EXM			CLAMP, Fuel Line
6	06104918AA	2	2, 3, 6, 7		13, 15, 17, 53, 55	EG2, EXM			CLAMP, Hose, 22-24-12MM
7	68012790AA	1	2, 6		53, 55	EG2, EXM			HOSE, Drain
8	05096566AA	2	2, 3, 6, 7		17, 53, 55, 13, 15	EG2, EXM			CLIP, Hose
9	05080431AB	1	2, 6		53, 55	EG2, EXM			CLAMP, 11MM
10	05135881AA	2	2, 3, 6, 7			EG2, EXM			CLAMP
11	68012740AA	1	2, 3, 6, 7			EG2, EXM			BRACKET, Hose
12	68012785AA	1	2, 3, 6, 7		53, 55	EG2, EXM			HOSE, Drain
13	05135881AA	2	2, 3, 6, 7			EXM, EG2			CLAMP
14	68012794AA	2	2, 3, 6, 7		13, 15, 17, 53, 55	EG2, EXM			GROMMET

SPRINTER (VB)

SERIES	LINE	BODY	ENGINE	TRANSMISSION
L = LOWLINE	3 = HD DODGE 2WD 2 = Med. Duty DODGE 2WD	03 = CAB CHASSIS WHEEL BASE 3 05 = CAB CHASSIS WHEEL BASE 5 13 = 119 WB 53 = 119 WB 15 = VAN WHEEL BASE 5 55 = WAGON WHEEL BASE 5 17 = VAN WHEEL BASE 7	EG2 = 3.5L V6 Gas Engine EXM = 3.0L V6 Turbo Diesel Engine	DGZ = 5-Speed Auto W5A380 Transmission

Rear A/C Condensed Water Drain
Figure 24-205

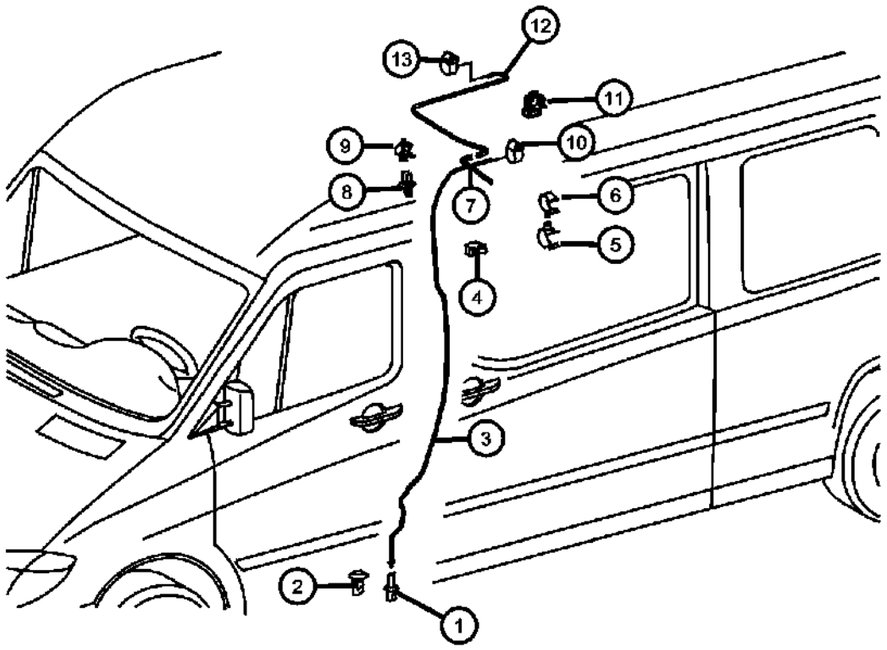

ITEM	PART NUMBER	QTY	LINE	SERIES	BODY	ENGINE	TRANS	TRIM	DESCRIPTION
1	68012795AA	1	2, 6		53, 55	EG2, EXM			HOSE, Drain
2	68012793AA	1	2, 6		53, 55	EG2, EXM			GROMMET
3									HOSE, Drain
	68012791AA	1	2, 3, 6, 7		53, 55	EG2, EXM			Extra High Roof
	68012792AA	1	2, 3, 6, 7		53, 55	EG2, EXM			
4	06104775AA	11	2, 3, 6, 7		13, 15, 17, 53, 55	EG2, EXM			CLAMP, 6.5x14.5
5	06104921AA	1	2, 3, 6, 7		13, 15, 17, 53, 55	EG2, EXM			CLAMP, Fuel Line
6	06104918AA	2	2, 3, 6, 7		13, 15, 17, 53, 55	EG2, EXM			CLAMP, Hose, 22-24-12MM
7									HOSE, Drain
	68012789AA	1	2, 6		53, 55	EG2, EXM			Extra High Roof
	68012790AA	1	2, 6		53, 55	EG2, EXM			
8	05096566AA	2	2, 3, 6, 7		13, 15, 17, 53, 55	EG2, EXM			CLIP, Hose
9	05080431AB	1	2, 6		53, 55	EG2, EXM			CLAMP, 11MM
10	05135881AA	2	2, 3, 6, 7			EG2, EXM			CLAMP
11	68012740AA	1	2, 3, 6, 7			EG2, EXM			BRACKET, Hose
12									HOSE, Drain
	68012785AA	1	2, 3, 6, 7		53, 55	EG2, EXM			Extra High Roof
	68012786AA	1	2, 3, 6, 7		53, 55	EG2, EXM			
13	05135881AA	2	2, 3, 6, 7			EG2, EXM			CLAMP

SPRINTER (VB)

SERIES	LINE	BODY	ENGINE	TRANSMISSION
L = LOWLINE	3 = HD DODGE 2WD 2 = Med. Duty DODGE 2WD	03 = CAB CHASSIS WHEEL BASE 3 05 = CAB CHASSIS WHEEL BASE 5 13 = 119 WB 53 = 119 WB 15 = VAN WHEEL BASE 5 55 = WAGON WHEEL BASE 5 17 = VAN WHEEL BASE 7	EG2 = 3.5L V6 Gas Engine EXM = 3.0L V6 Turbo Diesel Engine	DGZ = 5-Speed Auto W5A380 Transmission

Auxiliary Warm Water Heater Mounting / Cargo & Passenger Van
Figure 24-210

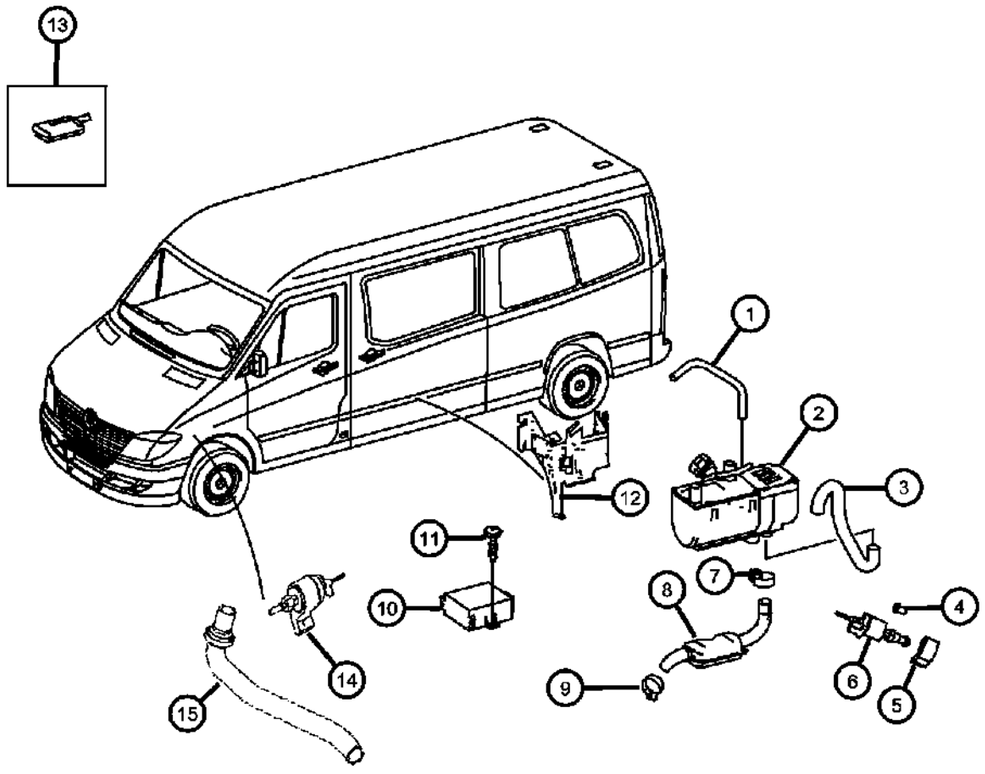

ITEM	PART NUMBER	QTY	LINE	SERIES	BODY	ENGINE	TRANS	TRIM	DESCRIPTION
1	68012853AA	1	2, 3, 6, 7			EXM			HOSE, Fuel
2	68026061AA	1	2, 3, 6, 7			EXM			HEATER, Supplemental Diesel Fuel
3	68012854AA	1	2, 3, 6, 7			EG2, EXM			HOSE
4									STRAINER
	05143168AA	1	2, 6		13, 15, 17, 53, 55	EG2			
		1	3, 7		03, 05	EG2			
5	68012850AA	1	2, 3, 6, 7			EXM			BRACKET
6	68012849AA	1	2, 3, 6, 7			EXM			PUMP, Fuel
7	05124716AA	1	2, 3, 6, 7			EG2, EXM			CLAMP, Hose
8	68012851AA	2	2, 3, 6, 7			EXM			MUFFLER, Exhaust
9	68012852AA	2	2, 3, 6, 7			EXM			CLAMP
10	68013548AA	1	2, 3, 6, 7			EG2, EXM			MODULE
11									SCREW, Tapping
	06104566AA	2	3, 7		03, 05	EG2, EXM			
		2	2, 3, 6, 7		13, 15, 17, 53, 55	EG2, EXM			
12	68012847AA	2	2, 3, 6, 7			EXM			BRACKET
13	68013547AA	1	2, 3, 6, 7			EG2, EXM			REMOTE
14	68012848AA	1	2, 3, 6, 7			EXM			PUMP, Fuel, Sender Unit
15	68020832AA	1	2, 3, 6, 7			EG2, EXM			HOSE

SPRINTER (VB)

SERIES	LINE	BODY	ENGINE	TRANSMISSION
L = LOWLINE	3 = HD DODGE 2WD 2 = Med. Duty DODGE 2WD	03 = CAB CHASSIS WHEEL BASE 3 05 = CAB CHASSIS WHEEL BASE 5 13 = 119 WB 53 = 119 WB 15 = VAN WHEEL BASE 5 55 = WAGON WHEEL BASE 5 17 = VAN WHEEL BASE 7	EG2 = 3.5L V6 Gas Engine EXM = 3.0L V6 Turbo Diesel Engine	DGZ = 5-Speed Auto W5A380 Transmission

Auxiliary Warm Water Heater Mounting / Cab Chassis
Figure 24-215

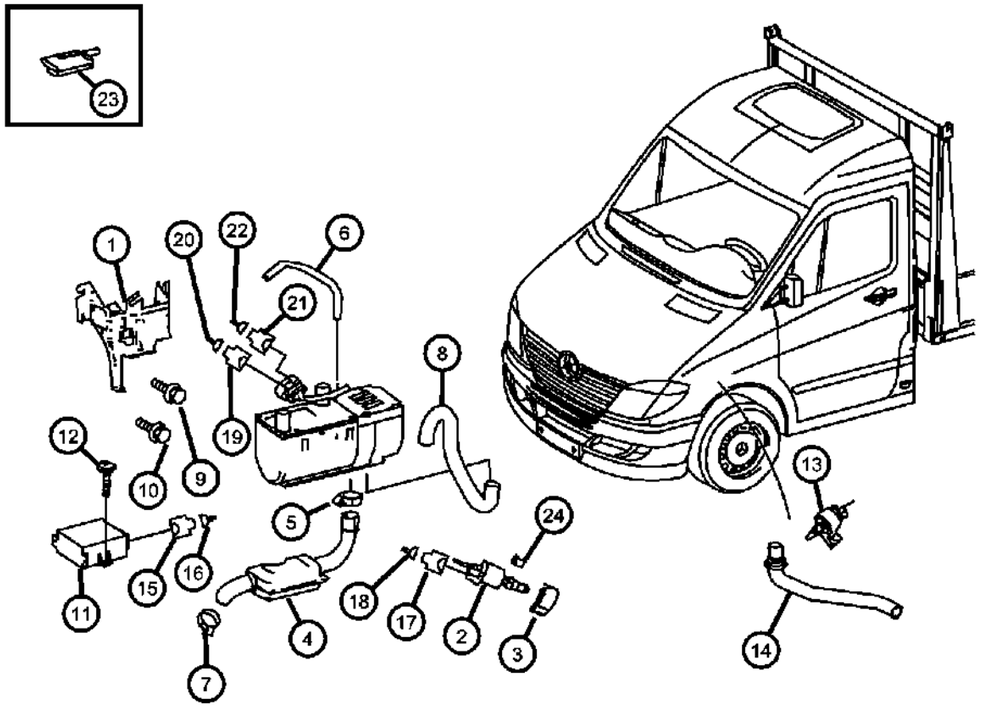

ITEM	PART NUMBER	QTY	LINE	SERIES	BODY	ENGINE	TRANS	TRIM	DESCRIPTION
1	68012847AA	2	2, 3, 6, 7			EXM			BRACKET
2	68012849AA	1	2, 3, 6, 7			EXM			PUMP, Fuel
3	68012850AA	1	2, 3, 6, 7			EXM			BRACKET
4	68012851AA	2	2, 3, 6, 7			EXM			MUFFLER, Exhaust
5	05124716AA	1	2, 3, 6, 7			EG2, EXM			CLAMP, Hose
6	68012853AA	1	2, 3, 6, 7			EXM			HOSE, Fuel
7	68012852AA	2	2, 3, 6, 7			EXM			CLAMP
8	68012854AA	1	2, 3, 6, 7			EG2, EXM			HOSE
9	68012855AA	1	2, 3, 6, 7			EXM			SCREW
10	05183964AA	1	2, 3, 6, 7			EXM			BOLT, Hex Flange Head, M6x1.00x10.90
11	68013548AA	1	2, 3, 6, 7			EG2, EXM			MODULE
12	06104566AA	2	2, 3, 6, 7			EG2, EXM			SCREW, Tapping
13	68012848AA	1	2, 3, 6, 7			EXM			PUMP, Fuel
14	68020832AA	1	2, 3, 6, 7			EG2, EXM			HOSE
15	05120786AA	1	2, 3, 6, 7			EG2, EXM			CONNECTOR, Stationary Heater Radio Recever [6 Pin; A49 / 4]
16	05103882AA	1	2, 3, 6, 7						TERMINAL, [0.5 - 1.0 MM2 JPT; A49 / 4]
17	05120749AA	1	2, 3, 6, 7			EG2, EXM			CONNECTOR, Metering Pump Aditional Heating [2 Pin; M46 / 1, M46 / 4]
18	05103880AA	AR	2, 3, 6, 7			EG2, EXM			TERMINAL, [0.5 - 1.0 MM2 JPT, M46 / 1, M46 / 4]
19	05133296AA	1	2, 3, 6, 7			EG2, EXM			CONNECTOR, Control Unit Independent Heating [8 Pin N33 / 3]
20	05133370AA	2	2, 3, 6, 7			EG2, EXM			TERMINAL, [1.5 - 2.5 MM2 JPT, N33 / 3]
21	68011286AA	1	2, 3, 6, 7			EG2, EXM			CONNECTOR, Control Unit Independent Heating [N33 / 3]
22	05103874AA	1	2, 3, 6, 7			EG2, EXM			TERMINAL, [0.75 MM2 MQS N33 / 3]
23	68013547AA	1	2, 3, 6, 7			EG2, EXM			REMOTE, With [XG2]
24	05143168AA	1	2, 3, 6, 7		13, 15, 17, 53, 55	EXM			STRAINER

SPRINTER (VB)

SERIES	LINE	BODY	ENGINE	TRANSMISSION
L = LOWLINE	3 = HD DODGE 2WD 2 = Med. Duty DODGE 2WD	03 = CAB CHASSIS WHEEL BASE 3 05 = CAB CHASSIS WHEEL BASE 5 13 = 119 WB 53 = 119 WB 15 = VAN WHEEL BASE 5 55 = WAGON WHEEL BASE 5 17 = VAN WHEEL BASE 7	EG2 = 3.5L V6 Gas Engine EXM = 3.0L V6 Turbo Diesel Engine	DGZ = 5-Speed Auto W5A380 Transmission

AR = use ase required - = Non illustrrated part

<< RETURN TO GROUP INDEX

Auxiliary Warm Water Heater Service Parts
Figure 24-220

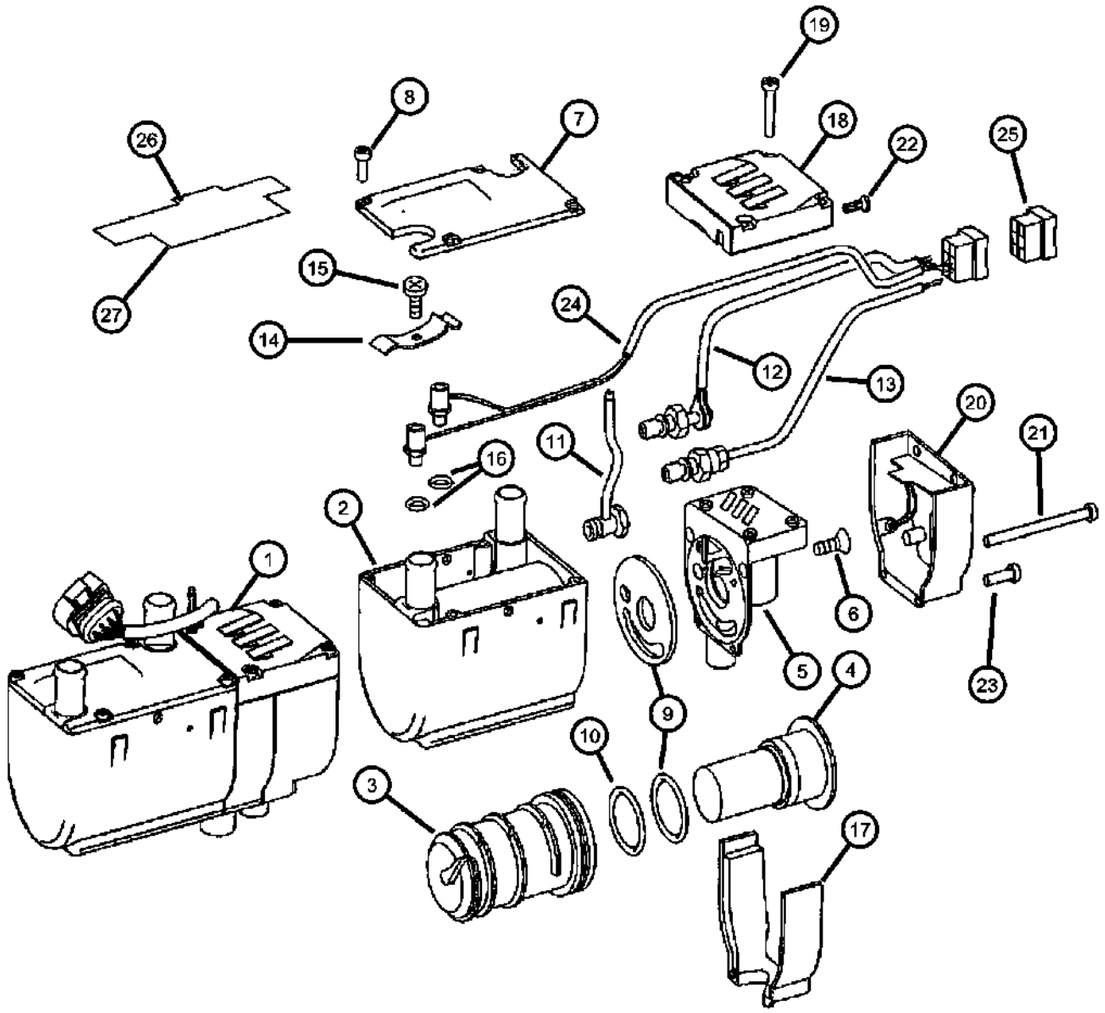

ITEM	PART NUMBER	QTY	LINE	SERIES	BODY	ENGINE	TRANS	TRIM	DESCRIPTION
1	68026061AA	1	2, 3, 6, 7			EXM			HEATER, Supplemental Diesel Fuel, Heater Assembly
2	68012829AA	1	2, 3, 6, 7			EXM			HOUSING, Heater
3	05143171AA	1	2, 3, 6, 7			EXM			HEATER, Supplemental Diesel Fuel, Heat Exchanger
4	05143170AA	1	2, 3, 6, 7			EXM			LINE, Heater, Combustor
5	68012831AA	1	2, 3, 6, 7			EXM			BLOWER, Motor
6	68012837AA	3	2, 3, 6, 7			EXM			SCREW, [M5x12]
7	05133306AA	1	2, 3, 6, 7		13, 15, 17, 53, 55	EXM			COVER, Heater Housing
8	68012836AA	4	2, 3, 6, 7		13, 15, 17, 53, 55	EXM			SCREW
9	05133307AB	1	2, 3, 6, 7		13, 15, 17, 53, 55	EXM			SEAL
10	05133309AA	1	2, 3, 6, 7		13, 15, 17, 53, 55	EXM			O RING, Heater Core
11	68012832AA	1	2, 3, 6, 7		13, 15, 17, 53, 55	EXM			FITTING, FITTING, Heater Plug Fitting
12	05143173AA	1	2, 3, 6, 7		13, 15, 17, 53, 55	EXM			PLUG, Glow
13	05103691AA	1	2, 3, 6, 7		13, 15, 17, 53, 55	EXM			SENSOR, Temperature
14	05133313AA	1	6, 7, 2, 3		13, 15, 17, 53, 55	EXM			CLIP, Spring
15	68012836AA	1	2, 3, 6, 7		13, 15, 17, 53, 55	EXM			SCREW
16	68012834AA	2	2, 3, 6, 7		13, 15, 17, 53, 55	EXM			O RING, Temperature Sensor
17	05143179AA	1	2, 3, 6, 7		13, 15, 17, 53, 55	EXM			DUCT, Control Unit Cover
18	68012835AA	1	2, 3, 6, 7		13, 15, 17, 53, 55	EXM			COVER
19	68012840AA	4	2, 3, 6, 7		13, 15, 17, 53, 55	EXM			SCREW, [M5x25]
20	68027643AA	1	2, 3, 6, 7			EXM			MODULE
21									SCREW
	68012838AA	1	2, 3, 6, 7		13, 15, 17, 53, 55	EXM			[M5x65]
	68012839AA	2	2, 3, 6, 7		13, 15, 17, 53, 55	EXM			[M4x10]
22	68012839AA	2	2, 3, 6, 7		13, 15, 17, 53, 55	EXM			SCREW, [M4x10]

SPRINTER (VB)

SERIES	LINE	BODY	ENGINE	TRANSMISSION
L = LOWLINE	3 = HD DODGE 2WD 2 = Med. Duty DODGE 2WD	03 = CAB CHASSIS WHEEL BASE 3 05 = CAB CHASSIS WHEEL BASE 5 13 = 119 WB 53 = 119 WB 15 = VAN WHEEL BASE 5 55 = WAGON WHEEL BASE 5 17 = VAN WHEEL BASE 7	EG2 = 3.5L V6 Gas Engine EXM = 3.0L V6 Turbo Diesel Engine	DGZ = 5-Speed Auto W5A380 Transmission

AR = use ase required - = Non illustrrated part

<< RETURN TO GROUP INDEX

Auxiliary Warm Water Heater Service Parts
Figure 24-220

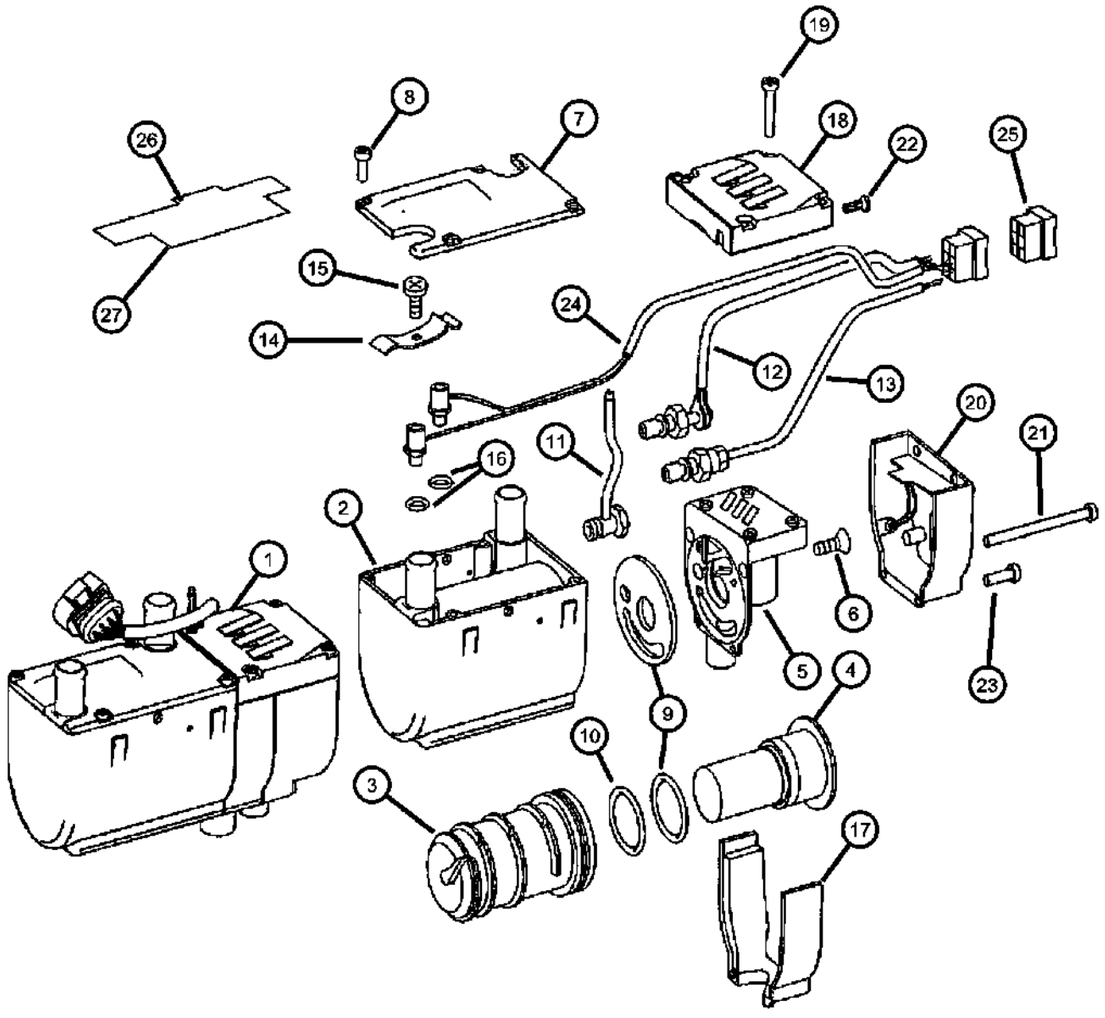

ITEM	PART NUMBER	QTY	LINE	SERIES	BODY	ENGINE	TRANS	TRIM	DESCRIPTION
23	68012841AA	1	2, 3, 6, 7		13, 15, 17, 53, 55	EXM			SCREW, [M5x16]
24	68012842AA	1	2, 3, 6, 7		13, 15, 17, 53, 55	EXM			WIRING
25	68012843AA	1	2, 3, 6, 7		13, 15, 17, 53, 55	EXM			CONNECTOR
26	68000330AA	1	2, 3, 6, 7			EXM			INSULATION, Insulation For Covering
27	68004346AA	1	2, 3, 6, 7			EXM			INSULATION, NONE, SPRINTER, Isnulation Against Moisture

SPRINTER (VB)

SERIES	LINE	BODY	ENGINE	TRANSMISSION
L = LOWLINE	3 = HD DODGE 2WD 2 = Med. Duty DODGE 2WD	03 = CAB CHASSIS WHEEL BASE 3 05 = CAB CHASSIS WHEEL BASE 5 13 = 119 WB 53 = 119 WB 15 = VAN WHEEL BASE 5 55 = WAGON WHEEL BASE 5 17 = VAN WHEEL BASE 7	EG2 = 3.5L V6 Gas Engine EXM = 3.0L V6 Turbo Diesel Engine	DGZ = 5-Speed Auto W5A380 Transmission

AR = use ase required - = Non illustrrated part

<< RETURN TO GROUP INDEX

Heater Lines
Figure 24-225

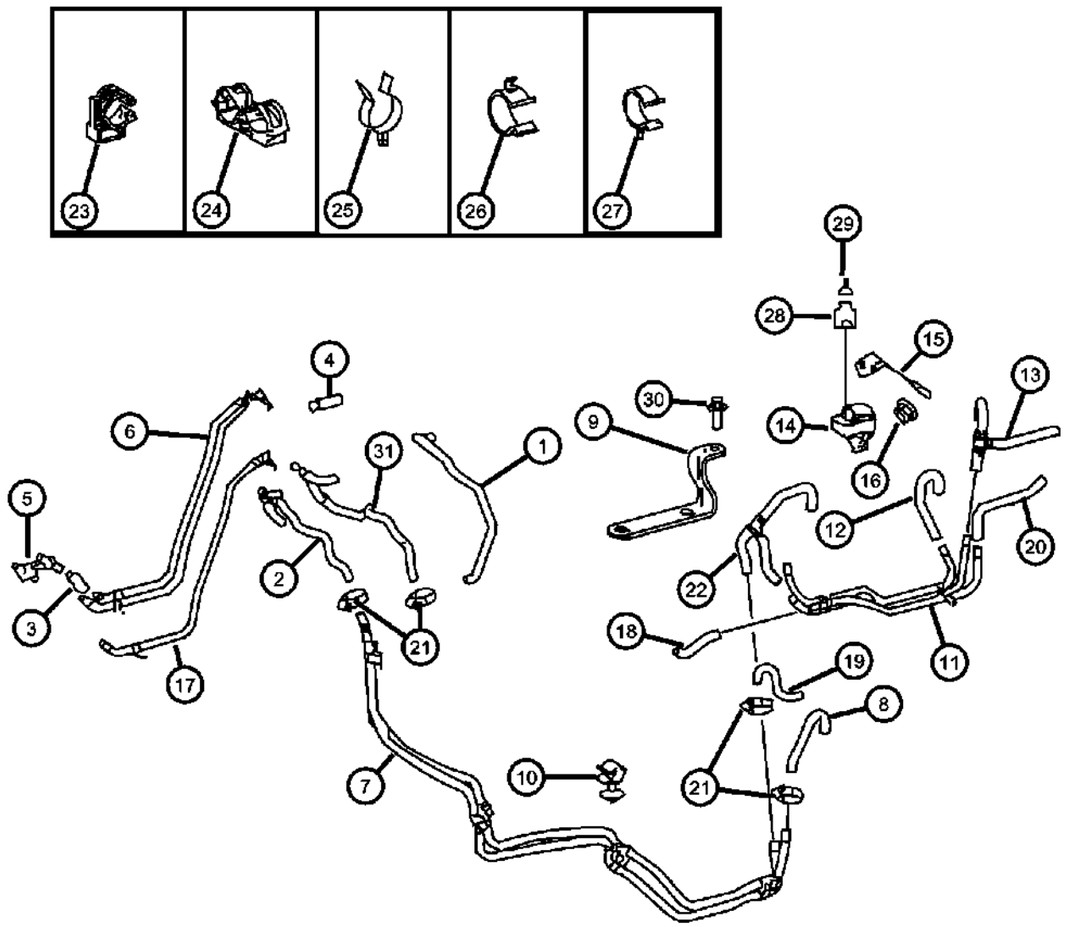

ITEM	PART NUMBER	QTY	LINE	SERIES	BODY	ENGINE	TRANS	TRIM	DESCRIPTION
1									HOSE, Heater Supply
	68025137AA	1	2, 3, 6, 7			EXM			Feed With [3JV Or XG3 And HDB Or HAB]
	68034968AA	1	2, 3, 6, 7		13, 15, 17, 53, 55	EXM			Feed
	68012703AA	1	2, 3, 6, 7			EG2			Feed With [HDB Or HAB]
	68012704AA	1	2, 3, 6, 7			EG2			Feed
	68012728AA	1	2, 3, 6, 7			EG2, EXM			Feed With [XBJ]
2									HOSE, Heater Supply
	68012711AA	1	2, 3, 6, 7			EG2, EXM			With [3JV Or XBJ Or XG3 And HDB]
	68012712AA	1	2, 3, 6, 7		13, 15, 17, 53, 55	EG2			With [HDC+HAB]
	68012713AA	1	2, 3, 6, 7			EG2, EXM			
3	68025139AA	1	2, 3, 6, 7			EXM			HOSE
4	68025140AA	1	2, 3, 6, 7			EXM			HOSE
5	68025141AA	1	2, 3, 6, 7			EXM			VALVE, Heater Bypass
6	68025138AA	1	2, 3, 6, 7			EXM			HOSE, Heater
7									HOSE, Heater
	68012715AA	1	2, 3, 6, 7			EG2, EXM			With [3JV And Or HDB Or HDC]
	68012716AA	1	2, 3, 6, 7		13, 15, 17, 53, 55	EG2, EXM			With [HDC + 3JV Or HDB Or XG3 Or XBJ]
8									HOSE, Heater
	68012717AA	1	2, 3, 6, 7			EG2, EXM			With [3JV Or HDB Or XG3 Or XBJ]
	68012737AA	1	2, 3, 6, 7		13, 15, 17, 53, 55	EG2, EXM			With [XBJ]
9									HOSE, Heater
	68012719AA	1	2, 3, 6, 7		13, 15, 17, 53, 55	EG2, EXM			With [HDC And Or XBJ + HDB And Or XC2]
	68012722AA	1	2, 3, 6, 7		13, 15, 17, 53, 55	EG2, EXM			With [XG3 + HDC]
	68012718AA	1	2, 3, 6, 7			EG2, EXM			With 3JV And Or HDB] Without [XBJ]
10	05117649AA	1	2, 3, 6, 7			EXM			CLIP, Hose, Hose Holder
11									HOSE, Heater
	68012723AA	1	2, 3, 6, 7		13, 15, 17, 53, 55	EG2, EXM			With [XG3 + HDC]

SPRINTER (VB)

SERIES	LINE	BODY	ENGINE	TRANSMISSION
L = LOWLINE	3 = HD DODGE 2WD 2 = Med. Duty DODGE 2WD	03 = CAB CHASSIS WHEEL BASE 3 05 = CAB CHASSIS WHEEL BASE 5 13 = 119 WB 53 = 119 WB 15 = VAN WHEEL BASE 5 55 = WAGON WHEEL BASE 5 17 = VAN WHEEL BASE 7	EG2 = 3.5L V6 Gas Engine EXM = 3.0L V6 Turbo Diesel Engine	DGZ = 5-Speed Auto W5A380 Transmission

Heater Lines
Figure 24-225

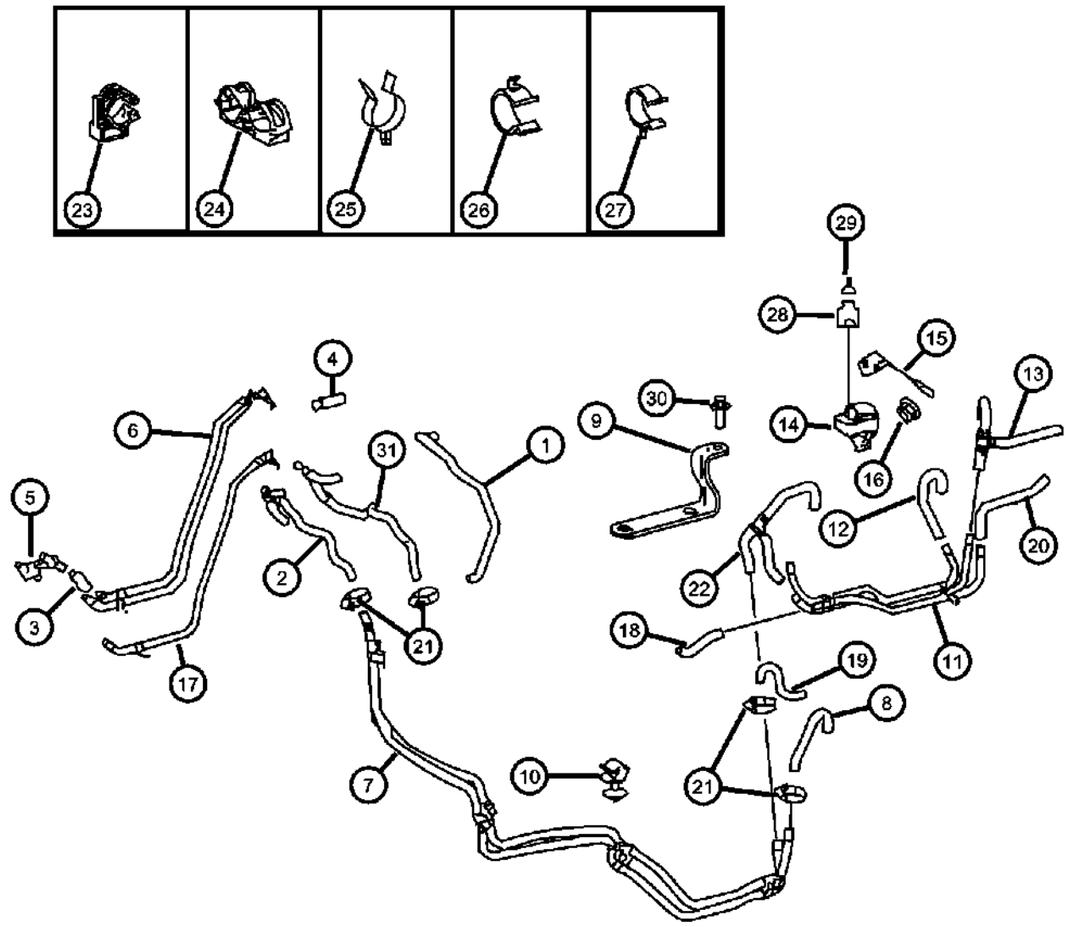

ITEM	PART NUMBER	QTY	LINE	SERIES	BODY	ENGINE	TRANS	TRIM	DESCRIPTION
	68012724AA	1	2, 3, 6, 7		13, 15, 17, 53, 55	EG2, EXM			With [HDC + 3JV And Or HDB Or XBJ]
12									HOSE, Heater
	68012725AA	1	2, 3, 6, 7		13, 15, 17, 53, 55	EG2, EXM			With [XG3 + HDC]
	68012726AA	1	2, 3, 6, 7		53, 55, 13, 15, 17	EG2, EXM			With [HDC + 3JV And Or HDB]
13	68012727AA	1	2, 3, 6, 7		13, 15, 17, 53, 55	EG2, EXM			HOSE, Heater, With [XG3 + HDC]
14	68012738AA	1	2, 3, 6, 7			EG2, EXM			PUMP, Recirculating
15	68012739AA	1	2, 3, 6, 7			EG2, EXM			BRACKET
16	05096978AA	2	2, 3, 6, 7		13, 15, 17, 53, 55	EG2, EXM			NUT, Hex, M6
17									HOSE, Heater Return
	68012733AA	1	2, 3, 6, 7		13, 15, 17, 53, 55	EG2			With [HDC]
	68012729AA	1	3, 6, 7, 2			EG2, EXM			
18	68012734AA	1	2, 3, 6, 7		13, 15, 17, 53, 55	EG2, EXM			HOSE, Heater Return, With [HDC + XC2 And Or HDB And Or XG3]
19	68012735AA	1	2, 3, 6, 7		13, 15, 17, 53, 55	EG2			HOSE, Heater, With [HDC]
20	68012736AA	1	2, 3, 6, 7		13, 15, 17, 53, 55	EXM, EG2			HOSE, Heater, With [HDC + 3JV And Or HDB And Or XG3]
21	05135881AA	2	2, 3, 6, 7			EG2, EXM			CLAMP
22	68012404AA	1	2, 3, 6, 7			EXM			BRACKET
23	68012740AA	1	2, 3, 6, 7			EG2, EXM			BRACKET, Hose, Hose To Body
24	68012741AA	1	2, 3, 6, 7		13, 15, 17, 53, 55	EG2, EXM			CLAMP, Hose To Body [2 x 23-28 MM]
25	05096566AA	1	2, 3, 6, 7		13, 15, 17, 53, 55	EG2, EXM			CLIP, Hose
26									CLAMP, Hose
	06104923AA	1	2, 3, 6, 7		13, 15, 17, 53, 55	EXM			[19 MM]
		1	2, 6		13, 15, 17, 53, 55	EG2			[19 MM]
27	06104918AA	2	2, 3, 6, 7		55, 13, 15, 17, 53	EG2, EXM			CLAMP, Hose, Hose To Engine [22 - 24 / 12MM]
28	05103931AA	1	2, 3, 6, 7			EG2, EXM			CONNECTOR, Recirculating Pump
29									TERMINAL

SPRINTER (VB)

SERIES	LINE	BODY	ENGINE	TRANSMISSION
L = LOWLINE	3 = HD DODGE 2WD 2 = Med. Duty DODGE 2WD	03 = CAB CHASSIS WHEEL BASE 3 05 = CAB CHASSIS WHEEL BASE 5 13 = 119 WB 53 = 119 WB 15 = VAN WHEEL BASE 5 55 = WAGON WHEEL BASE 5 17 = VAN WHEEL BASE 7	EG2 = 3.5L V6 Gas Engine EXM = 3.0L V6 Turbo Diesel Engine	DGZ = 5-Speed Auto W5A380 Transmission

Heater Lines
Figure 24-225

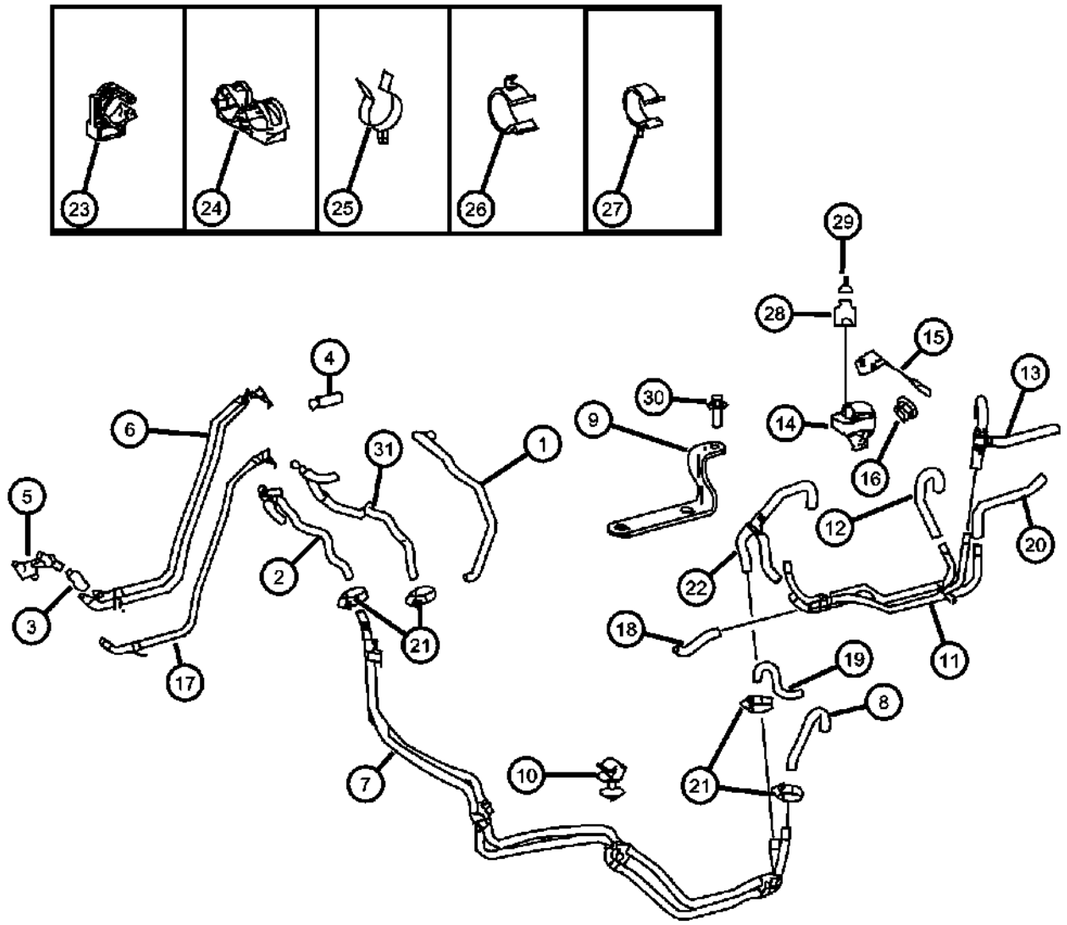

ITEM	PART NUMBER	QTY	LINE	SERIES	BODY	ENGINE	TRANS	TRIM	DESCRIPTION
	05133353AA	AR	2, 3, 6, 7			EG2			[0.75 - 1.0 MM]
		AR	2, 3, 6, 7			EXM			[0.75 - 1.0 MM]
30									BOLT, 6 Lobe External Head, M6X1.00X16.00
	06104005AA	3	2, 3, 6, 7			EG2			
		1	2, 3, 6, 7			EXM			
31	68012733AA	1	2, 3, 6, 7		13, 15, 17, 53, 55	EG2			HOSE, Heater Return

SPRINTER (VB)

SERIES	LINE	BODY	ENGINE	TRANSMISSION
L = LOWLINE	3 = HD DODGE 2WD 2 = Med. Duty DODGE 2WD	03 = CAB CHASSIS WHEEL BASE 3 05 = CAB CHASSIS WHEEL BASE 5 13 = 119 WB 53 = 119 WB 15 = VAN WHEEL BASE 5 55 = WAGON WHEEL BASE 5 17 = VAN WHEEL BASE 7	EG2 = 3.5L V6 Gas Engine EXM = 3.0L V6 Turbo Diesel Engine	DGZ = 5-Speed Auto W5A380 Transmission

AR = use ase required - = Non illustrrated part

<< RETURN TO GROUP INDEX

Heater Lines
Figure 24-230

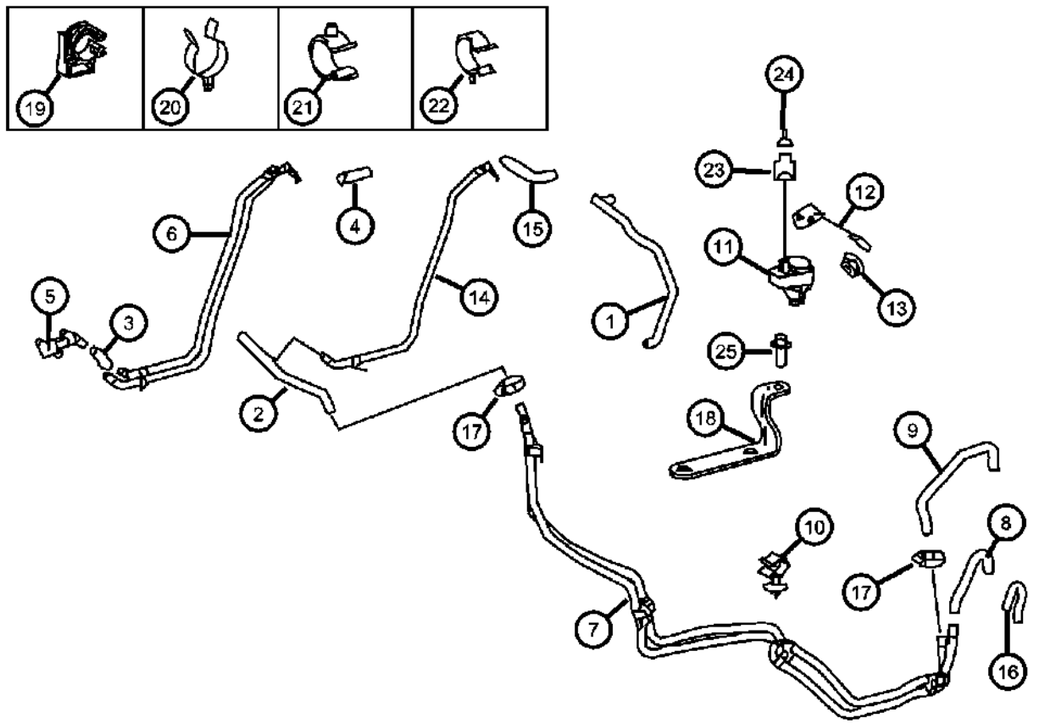

ITEM	PART NUMBER	QTY	LINE	SERIES	BODY	ENGINE	TRANS	TRIM	DESCRIPTION
1									HOSE, Heater Supply
	68034968AA	1	3, 7		03, 05	EXM			
	68012703AA	1	2, 3, 6, 7			EG2			With HDB And Or HAB]
	68012704AA	1	2, 3, 6, 7			EG2			
	68012728AA	1	2, 3, 6, 7			EG2, EXM			With [3JV And Or HDB And Or XG3 And Or XBJ]
	68025137AA	1	2, 3, 6, 7			EXM			With [3JV And Or HDB And Or XG3 And Or HAB]
2									HOSE, Heater Supply
	68012711AA	1	2, 3, 6, 7			EG2, EXM			With [3JV And Or HDB And Or XG3 And Or XBJ]
	68012713AA	1	2, 3, 6, 7			EG2, EXM			
3	68025139AA	1	2, 3, 6, 7			EXM			HOSE
4	68025140AA	1	2, 3, 6, 7			EXM			HOSE
5	68025141AA	1	2, 3, 6, 7			EXM			VALVE, Heater Bypass
6	68025138AA	1	2, 3, 6, 7			EXM			HOSE, Heater
7	68012715AA	1	7, 2, 3, 6			EXM, EG2			HOSE, Heater
8	68012717AA	1	2, 3, 6, 7			EG2, EXM			HOSE, Heater
9	68012718AA	1	2, 3, 6, 7			EG2, EXM			HOSE, Heater
10	68035039AA	1	2, 3, 6, 7			EXM			CLIP, Hose, Hose To Engine
11	68012738AA	1	2, 3, 6, 7			EG2, EXM			PUMP, Recirculating
12	68012739AA	1	2, 3, 6, 7			EG2, EXM			BRACKET, Recirculating Pump
13	06104708AA	1	2, 3, 6, 7			EG2, EXM			NUT, Hex, M6
14	68012729AA	1	2, 3, 6, 7			EG2, EXM			HOSE, Heater Return
15	68012732AA	1	3, 7		03, 05	EG2, EXM			HOSE, Heater Return
16	68012737AA	1	3, 7		03, 05	EG2, EXM			HOSE, Heater
17	05135881AA	2	2, 3, 6, 7			EG2, EXM			CLAMP
18	68012404AA	1	2, 3, 6, 7			EXM			BRACKET
19	68012740AA	1	2, 3, 6, 7			EG2, EXM			BRACKET, Hose
20	05096566AA	1	3, 7		03, 05	EG2, EXM			CLIP, Hose
21									CLAMP, Hose
	06104923AA	1	3, 7		03, 05	EXM			Hose To Engine [19 MM]
		1	3, 7		03, 05	EG2			Hose To Engine [19 MM]

SPRINTER (VB)

SERIES	LINE	BODY	ENGINE	TRANSMISSION
L = LOWLINE	3 = HD DODGE 2WD 2 = Med. Duty DODGE 2WD	03 = CAB CHASSIS WHEEL BASE 3 05 = CAB CHASSIS WHEEL BASE 5 13 = 119 WB 53 = 119 WB 15 = VAN WHEEL BASE 5 55 = WAGON WHEEL BASE 5 17 = VAN WHEEL BASE 7	EG2 = 3.5L V6 Gas Engine EXM = 3.0L V6 Turbo Diesel Engine	DGZ = 5-Speed Auto W5A380 Transmission

Heater Lines
Figure 24-230

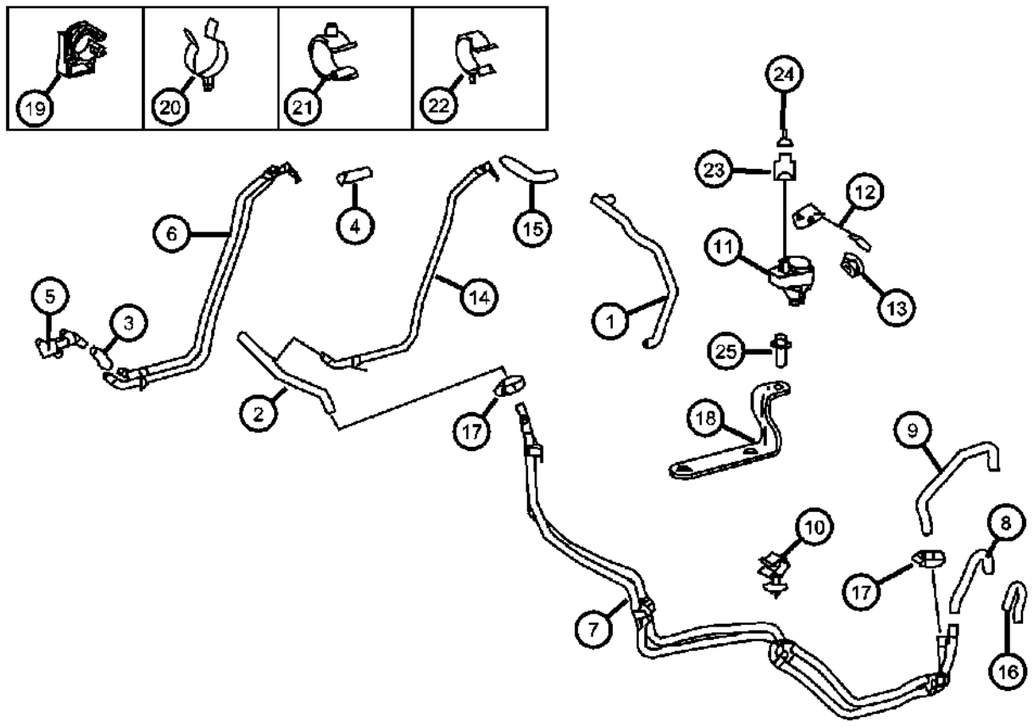

ITEM	PART NUMBER	QTY	LINE	SERIES	BODY	ENGINE	TRANS	TRIM	DESCRIPTION
22	06104918AA	1	3, 7		03, 05	EG2			CLAMP, Hose, Hose To Engine[22 - 24 / 12MM]
23	05103931AA	1	2, 3, 6, 7			EG2, EXM			CONNECTOR, Recirculating Pump
24									TERMINAL
	05133353AA	AR	2, 3, 6, 7			EG2			[0.75 - 1.0 MM]
		AR	2, 3, 6, 7			EXM			[0.75 - 1.0 MM]
25									BOLT, 6 Lobe External Head, M6X1.00X16.00
	06104005AA	3	2, 3, 6, 7			EG2			
		1	2, 3, 6, 7			EXM			

SPRINTER (VB)

SERIES	LINE	BODY	ENGINE	TRANSMISSION
L = LOWLINE	3 = HD DODGE 2WD 2 = Med. Duty DODGE 2WD	03 = CAB CHASSIS WHEEL BASE 3 05 = CAB CHASSIS WHEEL BASE 5 13 = 119 WB 53 = 119 WB 15 = VAN WHEEL BASE 5 55 = WAGON WHEEL BASE 5 17 = VAN WHEEL BASE 7	EG2 = 3.5L V6 Gas Engine EXM = 3.0L V6 Turbo Diesel Engine	DGZ = 5-Speed Auto W5A380 Transmission

Refrigerant Lines / Chassis Cab
Figure 24-235

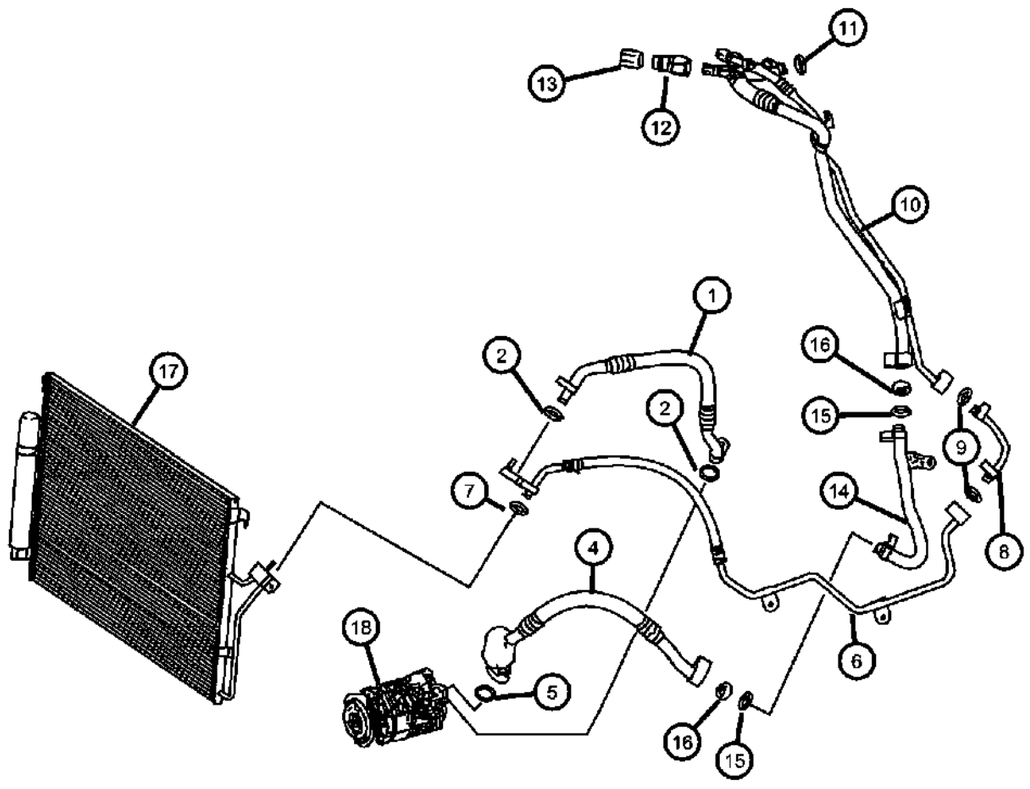

ITEM	PART NUMBER	QTY	LINE	SERIES	BODY	ENGINE	TRANS	TRIM	DESCRIPTION
1									LINE, A/C
	68012744AA	1	2, 3, 6, 7			EXM			To [A/C] Compressor
	68012745AA	1	2, 3, 6, 7			EG2			To [A/C] Compressor
2	05103571AA	1	2, 3, 6, 7			EG2, EXM			O RING, Air Conditioning Line, [9.5 x 2.5 MM]
-3	05098972AA	1	3, 7		03, 05	EXM			O RING, A/C Line, [14 x 2 MM]
4									LINE, A/C Suction
	68012754AA	1	2, 3, 6, 7			EXM			
	68012755AA	1	2, 3, 6, 7			EG2			
5									O RING, A/C Line
	05103936AA	1	3, 7		03, 05	EXM			[23.8 x 2.4 MM]
		1	3, 7		03, 05	EG2			[23.8 x 2.4 MM]
6	68012761AA	1	2, 3, 6, 7			EG2, EXM			LINE, A/C Liquid
7	05103571AA	1	2, 3, 6, 7			EG2, EXM			O RING, Air Conditioning Line, [9.5 x 2.5 MM]
8	68012764AA	1	2, 3, 6, 7			EG2, EXM			LINE, A/C
9	05103571AA	1	2, 3, 6, 7			EG2, EXM			O RING, Air Conditioning Line, [9.5 x 2.5 MM]
10	68012765AA	1	2, 3, 6, 7			EG2, EXM			LINE, A/C Suction & Discharge
11	05098972AA	1	3, 7		03, 05	EG2, EXM			O RING, A/C Line, [14 x 2 MM]
12	05098396AB	1	3, 7		03, 05	EG2, EXM			VALVE, Charging
13	05134029AA	1	3, 7		03, 05	EG2, EXM			CAP, A/C Charge Valve
14	68012773AA	1	2, 3, 6, 7			EG2, EXM			LINE, A/C
15	05138942AA	2	3, 7		03, 05	EG2, EXM			O RING, [13.7 X 2.5 MM]
16	05159481AA	2	3, 7		03, 05	EG2, EXM			GUIDE
17	68013633AA	1	2, 3, 6, 7			EG2, EXM			CONDENSER, A/C
18									COMPRESSOR, Air Conditioning
	68006192AA	1	2, 3, 6, 7			EG2			
	68012247AA	1	3, 6, 2, 7			EXM			

SPRINTER (VB)

SERIES	LINE	BODY	ENGINE	TRANSMISSION
L = LOWLINE	3 = HD DODGE 2WD 2 = Med. Duty DODGE 2WD	03 = CAB CHASSIS WHEEL BASE 3 05 = CAB CHASSIS WHEEL BASE 5 13 = 119 WB 53 = 119 WB 15 = VAN WHEEL BASE 5 55 = WAGON WHEEL BASE 5 17 = VAN WHEEL BASE 7	EG2 = 3.5L V6 Gas Engine EXM = 3.0L V6 Turbo Diesel Engine	DGZ = 5-Speed Auto W5A380 Transmission

Refrigerant Lines / Cargo / Passenger Van
Figure 24-240

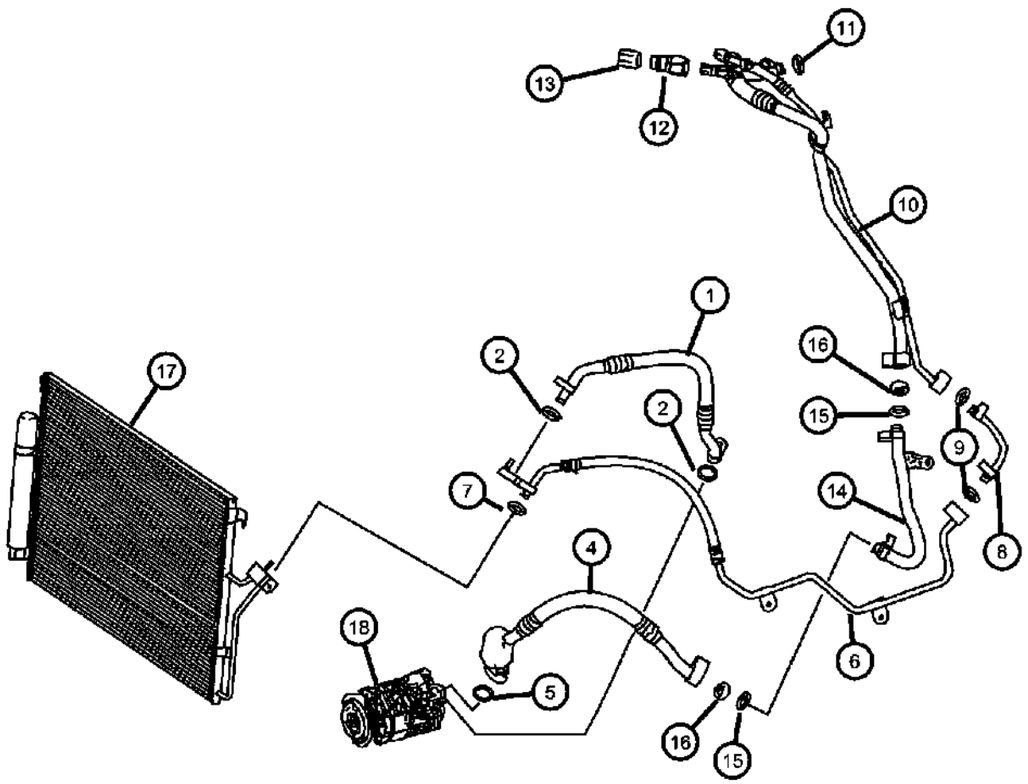

ITEM	PART NUMBER	QTY	LINE	SERIES	BODY	ENGINE	TRANS	TRIM	DESCRIPTION
1									LINE, A/C
	68012744AA	1	2, 3, 6, 7			EXM			To [A/C] Compressor
	68012745AA	1	2, 3, 6, 7			EG2			To [A/C] Compressor
2	05103571AA	1	2, 3, 6, 7			EG2, EXM			O RING, Air Conditioning Line, [9.5 x 2.5 MM]
-3	05098972AA	1	2, 3, 6, 7		13, 15, 17, 53, 55	EG2, EXM			O RING, A/C Line, [14 x 2 MM]
4									LINE, A/C Suction
	68012754AA	1	2, 3, 6, 7			EXM			
	68012755AA	1	2, 3, 6, 7			EG2			
5	05103936AA	1	2, 3, 6, 7		13, 15, 17, 53, 55	EXM			O RING, A/C Line, [23.8 x 2.4 MM]
6	68012761AA	1	2, 3, 6, 7			EG2, EXM			LINE, A/C Liquid
7	05103571AA	1	2, 3, 6, 7			EG2, EXM			O RING, Air Conditioning Line, [9.5 x 2.5 MM]
8	68012764AA	1	2, 3, 6, 7			EG2, EXM			LINE, A/C
9	05103571AA	1	2, 3, 6, 7			EG2, EXM			O RING, Air Conditioning Line, [9.5 x 2.5 MM]
10	68012765AA	1	2, 3, 6, 7			EG2, EXM			LINE, A/C Suction & Discharge
11	05098972AA	1	2, 3, 6, 7		13, 15, 17, 53, 55	EG2, EXM			O RING, A/C Line, [14 x 2 MM]
12	05098396AB	1	2, 3, 6, 7		13, 15, 17, 53, 55	EG2, EXM			VALVE, Charging
13	05134029AA	1	2, 3, 6, 7		13, 15, 17, 53, 55	EG2, EXM			CAP, A/C Charge Valve
14	68012773AA	1	2, 3, 6, 7			EG2, EXM			LINE, A/C
15	05138942AA	1	2, 3, 6, 7		13, 15, 17, 53, 55	EG2, EXM			O RING, [13.7 X 2.5 MM]
16	05159481AA	2	2, 3, 6, 7		13, 15, 17, 53, 55	EG2, EXM			GUIDE
17	68013633AA	1	2, 3, 6, 7			EG2, EXM			CONDENSER, A/C
18									COMPRESSOR, Air Conditioning
	68006192AA	1	2, 3, 6, 7			EG2			
	68012247AA	1	2, 3, 6, 7			EXM			

SPRINTER (VB)

SERIES	LINE	BODY	ENGINE	TRANSMISSION
L = LOWLINE	3 = HD DODGE 2WD 2 = Med. Duty DODGE 2WD	03 = CAB CHASSIS WHEEL BASE 3 05 = CAB CHASSIS WHEEL BASE 5 13 = 119 WB 53 = 119 WB 15 = VAN WHEEL BASE 5 55 = WAGON WHEEL BASE 5 17 = VAN WHEEL BASE 7	EG2 = 3.5L V6 Gas Engine EXM = 3.0L V6 Turbo Diesel Engine	DGZ = 5-Speed Auto W5A380 Transmission

AR = use ase required - = Non illustrrated part

Refrigerant Line Routing/Rear A/C
Figure 24-245

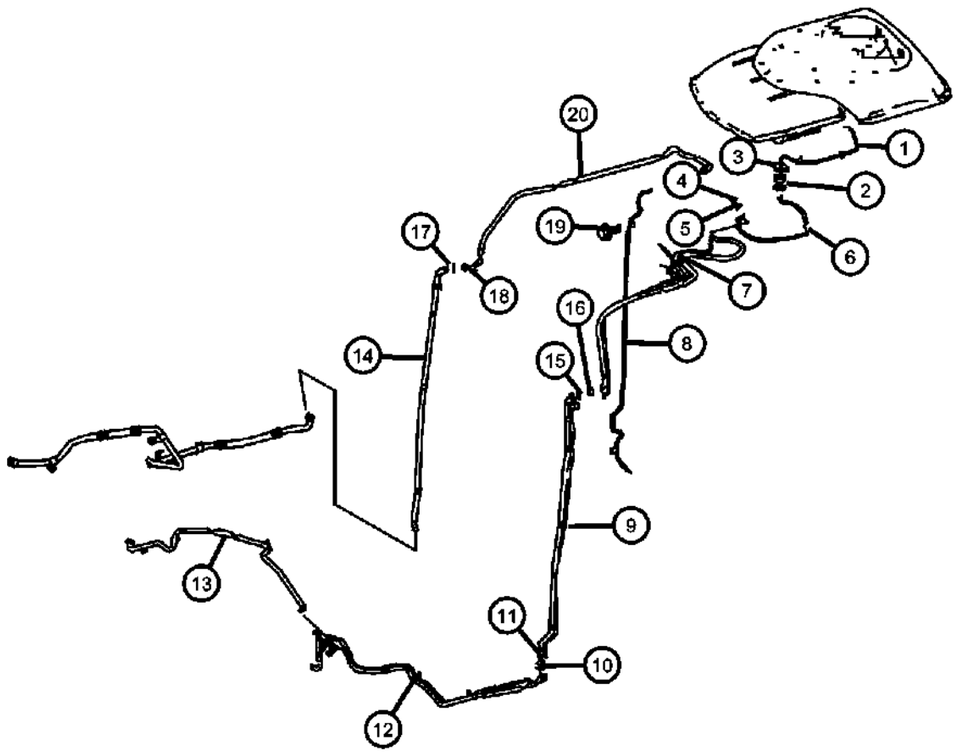

ITEM	PART NUMBER	QTY	LINE	SERIES	BODY	ENGINE	TRANS	TRIM	DESCRIPTION
1	68012779AA	1	2, 6		53, 55	EG2, EXM			LINE, A/C
2	68012780AA	1	2, 6		53, 55	EG2, EXM			GUIDE
3	05103571AA	1	2, 3, 6, 7			EG2, EXM			O RING, Air Conditioning Line
4									GUIDE
	68012782AA	2	2, 6		53, 55	EG2, EXM			
		1	2, 3, 6, 7		13, 15, 17, 53, 55	EG2, EXM			
5	05098970AA	1	2, 3, 6, 7		13, 15, 17, 53, 55	EG2, EXM			O RING, A/C Line
6	68012784AA	1	2, 6		53, 55	EG2, EXM			LINE, A/C
7									LINE, A/C
	68012772AA	1	2, 6		53, 55	EG2, EXM			
	68012775AA	1	2, 6		53, 55	EG2, EXM			With [HBD+MWJ]
8	68009179AA	1	2, 6		53, 55	EG2, EXM			LINE, A/C
9	68012774AA	1	2, 6		53, 55	EXM, EG2			LINE, A/C
10	05138942AA	3	2, 3, 6, 7		13, 15, 17, 53, 55	EG2, EXM			O RING
11	05159481AA	2	2, 3, 6, 7		13, 15, 17, 53, 55	EG2, EXM			GUIDE
12	68012777AA	1	2, 6		53, 55	EG2, EXM			LINE, A/C
13	68012778AA	1	2, 6		53, 55	EG2, EXM			LINE, A/C
14	68012770AA	1	2, 6		53, 55	EG2, EXM			LINE, A/C
15	05098970AA	1	2, 3, 6, 7		15, 17, 53, 55, 13	EG2, EXM			O RING, A/C Line
16	05159481AA	1	2, 3, 6, 7		13, 15, 17, 53, 55	EG2, EXM			GUIDE
17	05138942AA	2	2, 3, 6, 7		13, 15, 17, 53, 55	EG2, EXM			O RING
18	05159481AA	2	2, 3, 6, 7		13, 15, 17, 53, 55	EG2, EXM			GUIDE
19	06104117AA	6	2, 3, 6, 7		17	EG2, EXM			SCREW, Hex Head, M5x16
20	68012771AA	1	2, 6		53, 55	EG2, EXM			LINE, A/C

SPRINTER (VB)

SERIES	LINE	BODY	ENGINE	TRANSMISSION
L = LOWLINE	3 = HD DODGE 2WD 2 = Med. Duty DODGE 2WD	03 = CAB CHASSIS WHEEL BASE 3 05 = CAB CHASSIS WHEEL BASE 5 13 = 119 WB 53 = 119 WB 15 = VAN WHEEL BASE 5 55 = WAGON WHEEL BASE 5 17 = VAN WHEEL BASE 7	EG2 = 3.5L V6 Gas Engine EXM = 3.0L V6 Turbo Diesel Engine	DGZ = 5-Speed Auto W5A380 Transmission

Refrigerant Lines / Rear Air Conditioner
Figure 24-250

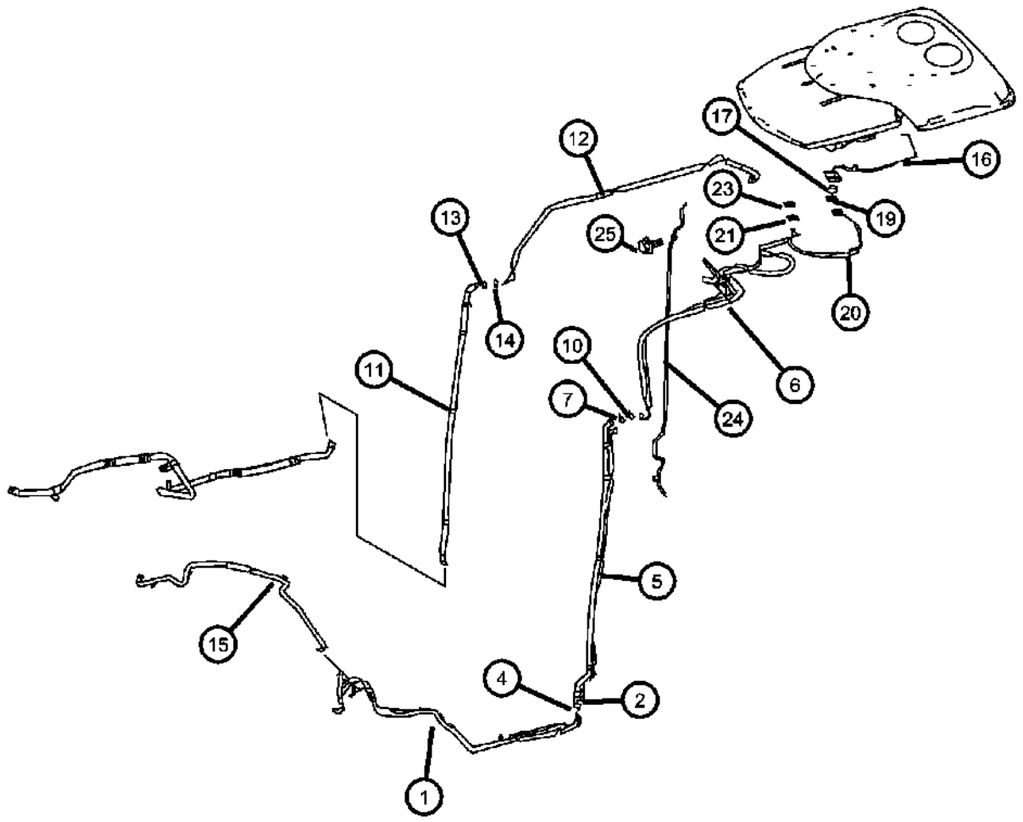

ITEM	PART NUMBER	QTY	LINE	SERIES	BODY	ENGINE	TRANS	TRIM	DESCRIPTION
1	68012777AA	1	2, 6		53, 55	EG2, EXM			LINE, A/C, With [HBD]
2	05138942AA	3	2, 3, 6, 7		13, 15, 17, 53, 55	EG2, EXM			O RING, [13.7 x 2.5 MM]
-3	05103571AA	1	2, 3, 6, 7		53, 55	EG2, EXM			O RING, Air Conditioning Line, [9.5 x 2.5 MM]
4	05159481AA	2	2, 3, 6, 7		13, 15, 17, 53, 55	EG2, EXM			GUIDE
5	68012774AA	1	2, 6		53, 55	EG2, EXM			LINE, A/C
6									LINE, A/C
	68012775AA	1	2, 6		53, 55	EG2, EXM			[HBD+MWJ]
	68012776AA	1	2, 6		53, 55	EG2, EXM			
7	05138942AA	1	2, 3, 6, 7		13, 15, 17, 53, 55	EG2, EXM			O RING, [13.7 x 2.5 MM]
-8									O RING, A/C Line
	05098970AA	1	2, 3, 6, 7		13, 15, 17, 53, 55	EG2, EXM			[7.5 x 2 MM]
	05098972AA	1	2, 3, 6, 7		13, 15, 17, 53, 55	EXM, EG2			[14 x 2 MM]
-9	05103571AA	1	2, 3, 6, 7			EG2, EXM			O RING, Air Conditioning Line, [9.5 x 2.5 MM]
10	05159481AA	1	2, 3, 6, 7		13, 15, 17, 53, 55	EG2, EXM			GUIDE
11	68012770AA	1	2, 6		53, 55	EG2, EXM			LINE, A/C
12									LINE, A/C
	68012771AA	1	2, 6		53, 55	EG2, EXM			With [HBD+MWJ]
	68012772AA	1	2, 6		53, 55	EG2, EXM			
13	05138942AA	1	2, 3, 6, 7		13, 15, 17, 53, 55	EG2, EXM			O RING, [13.7 X 2.5 MM]
14	05159481AA	2	2, 3, 6, 7		13, 15, 17, 53, 55	EG2, EXM			GUIDE
15	68012778AA	1	2, 6		53, 55	EG2, EXM			LINE, A/C
16									LINE, A/C
	68012779AA	1	2, 6		53, 55	EG2, EXM			From Roof Opening To Condenser
	68012781AA	1	2, 6		53, 55	EG2, EXM			From Drier To Roof Opening
17	05138942AA	1	2, 3, 6, 7		13, 15, 17, 53, 55	EG2, EXM			O RING, [13.7 x 2.5 MM]
-18	05103571AA	1	2, 3, 6, 7		53, 55	EG2, EXM			O RING, Air Conditioning Line, [9.5 x 2.5MM]
19									GUIDE

SPRINTER (VB)

SERIES	LINE	BODY	ENGINE	TRANSMISSION
L = LOWLINE	3 = HD DODGE 2WD 2 = Med. Duty DODGE 2WD	03 = CAB CHASSIS WHEEL BASE 3 05 = CAB CHASSIS WHEEL BASE 5 13 = 119 WB 53 = 119 WB 15 = VAN WHEEL BASE 5 55 = WAGON WHEEL BASE 5 17 = VAN WHEEL BASE 7	EG2 = 3.5L V6 Gas Engine EXM = 3.0L V6 Turbo Diesel Engine	DGZ = 5-Speed Auto W5A380 Transmission

AR = use ase required - = Non illustrrated part

<< RETURN TO GROUP INDEX

Refrigerant Lines / Rear Air Conditioner
Figure 24-250

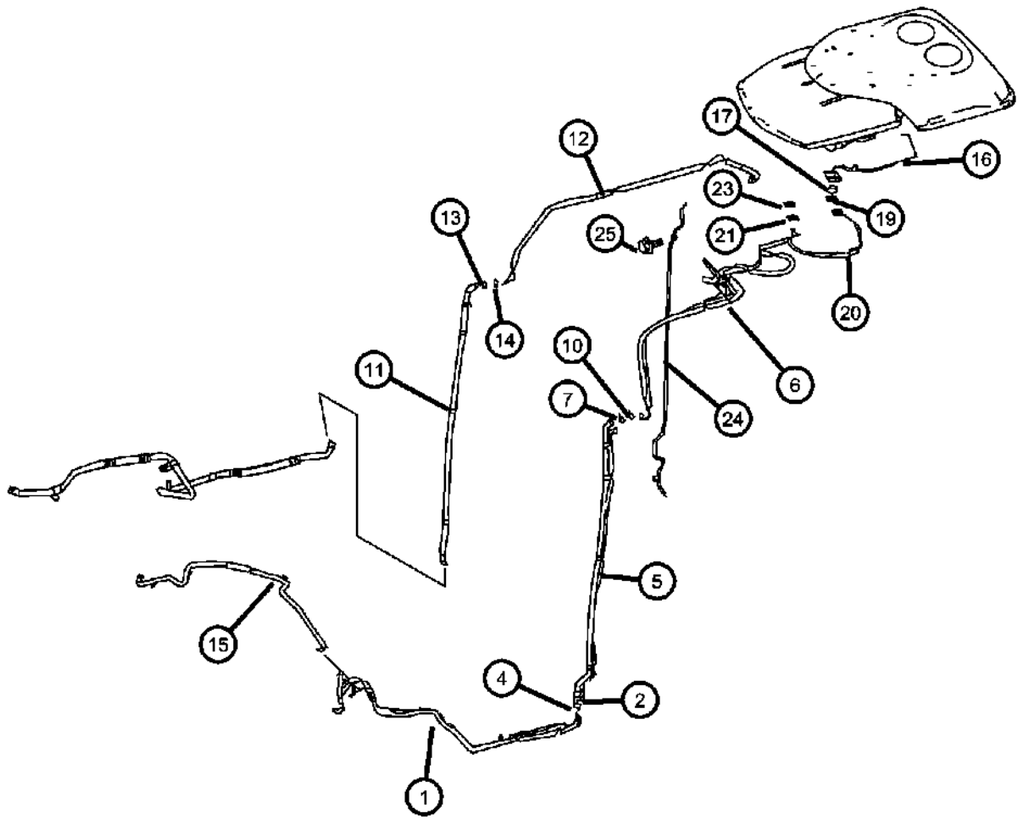

ITEM	PART NUMBER	QTY	LINE	SERIES	BODY	ENGINE	TRANS	TRIM	DESCRIPTION
	68012780AA	1	2, 6		53, 55	EG2, EXM			
	68012782AA	1	2, 3, 6, 7		13, 15, 17, 53, 55	EG2, EXM			Return
20									LINE, A/C
	68012783AA	1	2, 6		53, 55	EG2, EXM			With [HBD+MWJ]
	68012784AA	1	2, 6		53, 55	EG2, EXM			
21	05098970AA	1	2, 3, 6, 7		13, 15, 17, 53, 55	EG2, EXM			O RING, A/C Line, [7.5 x 2 MM]
-22	05103571AA	1	2, 3, 6, 7		53, 55	EG2, EXM			O RING, Air Conditioning Line, [9.5 x 2.5 MM]
23	68012782AA	1	2, 3, 6, 7		13, 15, 17, 53, 55	EG2, EXM			GUIDE
24	68009179AA	1	2, 6		53, 55	EG2, EXM			LINE, A/C
25	06104117AA	6	2, 3, 6, 7		13, 15, 17, 53, 55	EG2, EXM			SCREW, Hex Head, [M5 x 16 MM]

SPRINTER (VB)

SERIES	LINE	BODY	ENGINE	TRANSMISSION
L = LOWLINE	3 = HD DODGE 2WD 2 = Med. Duty DODGE 2WD	03 = CAB CHASSIS WHEEL BASE 3 05 = CAB CHASSIS WHEEL BASE 5 13 = 119 WB 53 = 119 WB 15 = VAN WHEEL BASE 5 55 = WAGON WHEEL BASE 5 17 = VAN WHEEL BASE 7	EG2 = 3.5L V6 Gas Engine EXM = 3.0L V6 Turbo Diesel Engine	DGZ = 5-Speed Auto W5A380 Transmission

Air Conditioner & Heater Control
Figure 24-310

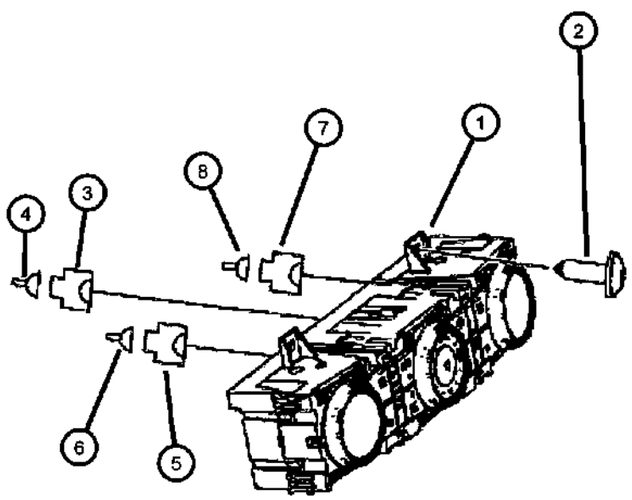

ITEM	PART NUMBER	QTY	LINE	SERIES	BODY	ENGINE	TRANS	TRIM	DESCRIPTION
NOTE:									
Sales Code:									
[DGZ]=5 Speed Automatic Transmission									
[EGM]=3.0L V-6 Turbo Diesel Engine [Mercedes Benz]									
[EG2]=3.5L V-6 Gas Engine [Mercedes Benz]									
1									CONTROL, A/C And Heater
	68012690AA	1	2, 3, 6, 7			EG2, EXM			With [HAB + HDC And / Or HBD]
	68012691AA	1	2, 3, 6, 7			EG2, EXM			With [HAB]
2	06104574AA	4	2, 3, 6, 7			EG2, EXM			SCREW, Tapping
3									CONNECTOR
	05120782AA	1	2, 3, 6, 7			EG2, EXM			[8 - Pin / S-98]
	68011209AA	1	2, 3, 6, 7			EXM, EG2			[28 - Pin / S98]
	68016738AA	1	2, 3, 6, 7			EG2, EXM			[S 98] Cover
	68016753AA	1	2, 3, 6, 7			EG2, EXM			[12 - Pin / S98]
4									TERMINAL
	05103873AA	3	3, 7		03, 05	EG2, EXM			[0.75 MM2 / MQS:S98]
		3	2, 3, 6, 7		13, 15, 17, 53, 55	EG2, EXM			[0.75 MM2 / MQS:S98]
5	68016755AA	1	2, 3, 6, 7			EG2, EXM			CONNECTOR, Wiring, [8 - Pin / S98]
6	05136771AA	AR	2, 3, 6, 7			EG2, EXM			WIRING PACKAGE, Terminal Repair, [0.5 MM2 / MSQ:S98]
7	68011345AA	1	2, 3, 6, 7			EG2, EXM			CONNECTOR, Wiring, [S98]
8	68011410AA	AR	2, 3, 6, 7			EG2, EXM			TERMINAL, [S98]

SPRINTER (VB)

SERIES	LINE	BODY	ENGINE	TRANSMISSION
L = LOWLINE	3 = HD DODGE 2WD 2 = Med. Duty DODGE 2WD	03 = CAB CHASSIS WHEEL BASE 3 05 = CAB CHASSIS WHEEL BASE 5 13 = 119 WB 53 = 119 WB 15 = VAN WHEEL BASE 5 55 = WAGON WHEEL BASE 5 17 = VAN WHEEL BASE 7	EG2 = 3.5L V6 Gas Engine EXM = 3.0L V6 Turbo Diesel Engine	DGZ = 5-Speed Auto W5A380 Transmission

A/C Compressor
Figure 24-405

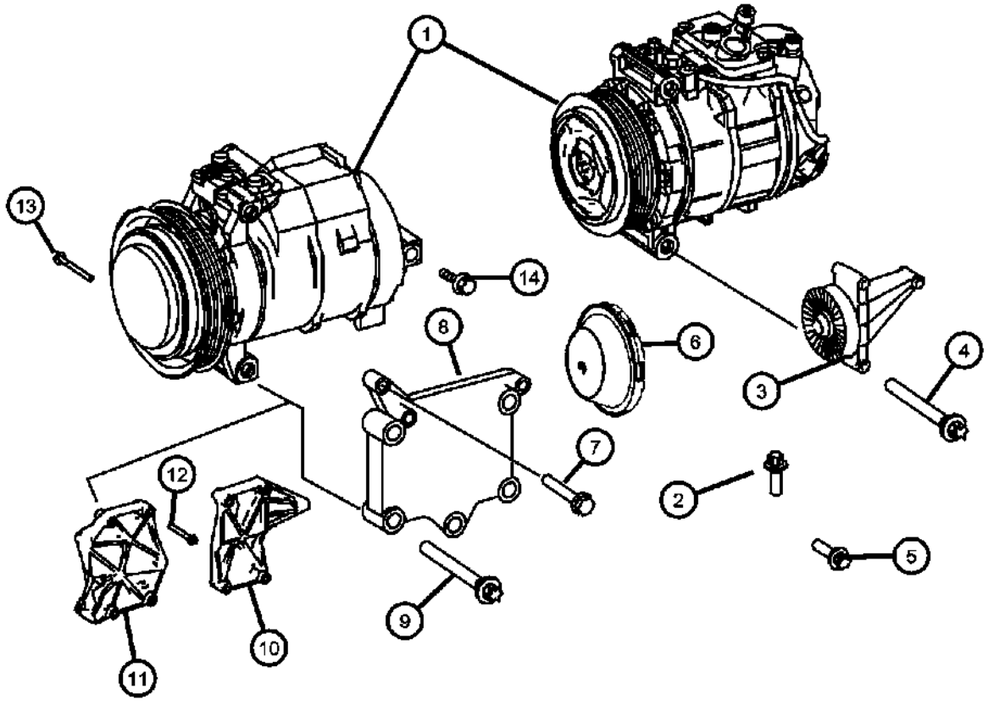

ITEM	PART NUMBER	QTY	LINE	SERIES	BODY	ENGINE	TRANS	TRIM	DESCRIPTION
1									COMPRESSOR, Air Conditioning
	68012247AA	1	2, 3, 6, 7			EXM			[HAB] Air Conditioning with Auto Temp
	68012250AA	1	2, 6		53, 55	EXM			[HBD] Rear Heavy Duty Air Conditioning
	68006192AA	1	2, 3, 6, 7			EG2			[HAB] Air Conditioning with Auto Temp
	68006194AA	1	2, 3, 6, 7			EG2			[HBD] Rear Heavy Duty Air Conditioning
2	06104025AA	1	2, 3, 6, 7			EG2			BOLT, M8x30
3	05117673AA	1	2, 3, 6, 7			EG2			PULLEY, Tensioner, With Guide Pulley
4	06104035AA	2	3, 7		03, 05	EG2			BOLT, Compressor to Timing Case M8x90
5	06104025AA	2	2, 3, 6, 7			EG2			BOLT, Bracket to Compressor M8x30
6	05125553AA	1	2, 3, 6, 7			EG2			CAP, Screw Cover
7	05102611AA	2	2, 3, 6, 7			EG2			SCREW, M8x50
8	06104035AA	1	2, 3, 6, 7			EG2			BOLT
9	06104035AA	1	2, 3, 6, 7			EG2			BOLT
10	68012249AA	1	2, 3, 6, 7			EXM			BRACKET
11	68012248AA	1	2, 3, 6, 7			EXM			BRACKET
12	06104032AA	4	2, 3, 6, 7			EXM			SCREW, M8x65
13	06104035AA	3	2, 3, 6, 7		13, 15, 17, 53, 55	EXM			BOLT
14	06104035AA	2	3, 7		03, 05	EG2			BOLT

SPRINTER (VB)

SERIES	LINE	BODY	ENGINE	TRANSMISSION
L = LOWLINE	3 = HD DODGE 2WD 2 = Med. Duty DODGE 2WD	03 = CAB CHASSIS WHEEL BASE 3 05 = CAB CHASSIS WHEEL BASE 5 13 = 119 WB 53 = 119 WB 15 = VAN WHEEL BASE 5 55 = WAGON WHEEL BASE 5 17 = VAN WHEEL BASE 7	EG2 = 3.5L V6 Gas Engine EXM = 3.0L V6 Turbo Diesel Engine	DGZ = 5-Speed Auto W5A380 Transmission

Air Ducting
Figure 24-610

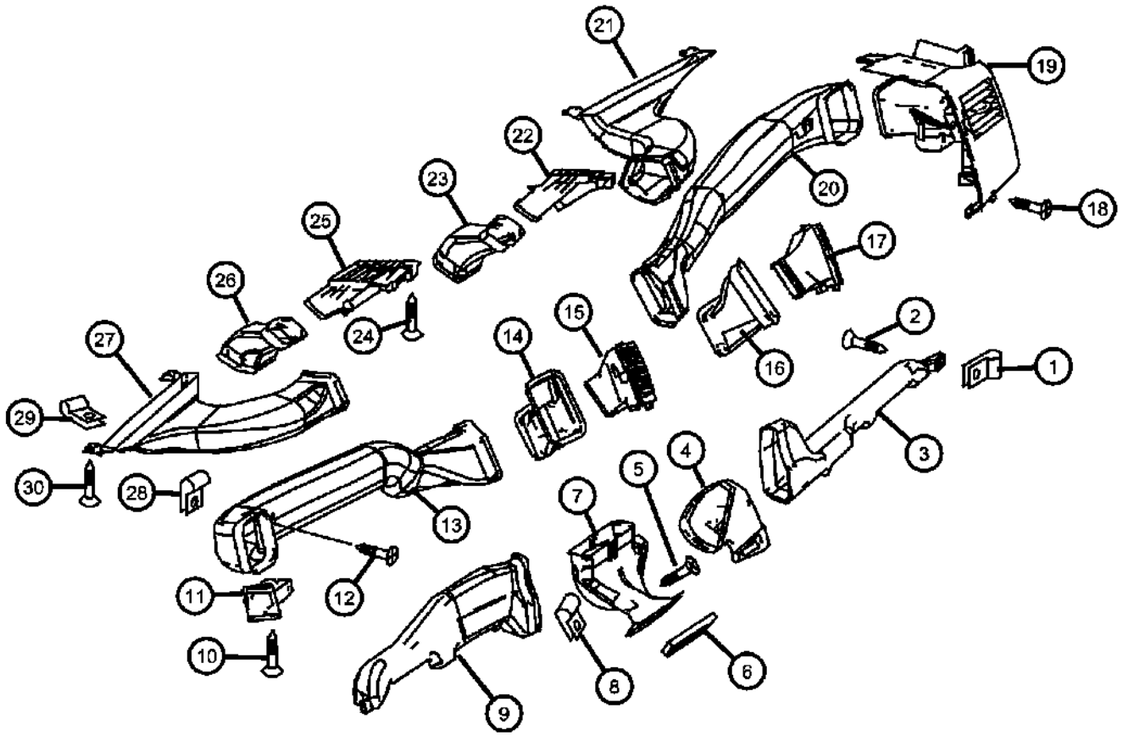

ITEM	PART NUMBER	QTY	LINE	SERIES	BODY	ENGINE	TRANS	TRIM	DESCRIPTION
1									NUT, Spring U Type
	68010366AA	2	2, 3, 6, 7		13, 15, 17, 53, 55	EG2, EXM			Air Duct Attachment
		2	3, 7		03, 05	EG2, EXM			Air Duct Attachment
2									SCREW, Tapping
	06104574AA	2	2, 3, 6, 7			EG2, EXM			Air Duct Attachment 4.8x16
		2	3, 7		03, 05	EG2, EXM			Air Duct Attachment 4.8x16
3	68010415AA	1	2, 3, 6, 7			EG2, EXM			DUCT, Floor, Leg Room, Right
4	68010419AA	1	2, 3, 6, 7		13, 15, 17, 53, 55	EG2, EXM			DUCT, FloorFront
5	06104574AA	1	2, 3, 6, 7			EG2, EXM			SCREW, Tapping
6	68004778AA	1	2, 3, 6, 7			EG2, EXM			SEAL, Air Duct
7									DUCT, Floor
	68004777AA	1	2, 3, 6, 7			EG2, EXM			Footwell Center
	68010418AA	1	2, 3, 6, 7		13, 15, 17, 53, 55	EG2, EXM			With [XGR+CW9]
8									NUT, Spring U Type
	68010366AA	1	3, 7		03, 05	EG2, EXM			Air Duct Attachment
		1	2, 3, 6, 7		13, 15, 17, 53, 55	EG2, EXM			Air Duct Attachment
9	68004776AA	1	2, 3, 6, 7			EG2, EXM			DUCT, Floor, Leg room, Left
10	06104510AA	2	2, 3, 6, 7			EG2, EXM			SCREW, Tapping, ST4.8x32-R
11	68010413AA	1	2, 3, 6, 7			EG2, EXM			DUCT, AIR, Outside, Left
12	06104574AA	4	2, 3, 6, 7			EG2, EXM			SCREW, Tapping
13	68004780AA	1	2, 3, 6, 7			EG2, EXM			DUCT, AIR, Top, Left
14	68004775AA	1	2, 3, 6, 7			EG2, EXM			DUCT, AIR, Central, Left
15	68004766AA	1	2, 3, 6, 7			EG2, EXM			OUTLET, Air Conditioning & Heater, Central, Left
16	68004774AA	1	2, 3, 6, 7			EG2, EXM			DUCT, AIR, Central, Right
17	68004767AA	1	2, 3, 6, 7			EG2, EXM			OUTLET, Air Conditioning & Heater, Central, Right
18	06104574AA	6	3, 7		03, 05	EG2, EXM			SCREW, Tapping, Mounting Nozzle 4.8x16
19									OUTLET, Air Conditioning & Heater
	68004771AA	1	2, 3, 6, 7			EG2, EXM			Lateral, Left
	68004772AA	1	2, 3, 6, 7			EG2, EXM			Lateral, Right

SPRINTER (VB)

SERIES	LINE	BODY	ENGINE	TRANSMISSION
L = LOWLINE	3 = HD DODGE 2WD 2 = Med. Duty DODGE 2WD	03 = CAB CHASSIS WHEEL BASE 3 05 = CAB CHASSIS WHEEL BASE 5 13 = 119 WB 53 = 119 WB 15 = VAN WHEEL BASE 5 55 = WAGON WHEEL BASE 5 17 = VAN WHEEL BASE 7	EG2 = 3.5L V6 Gas Engine EXM = 3.0L V6 Turbo Diesel Engine	DGZ = 5-Speed Auto W5A380 Transmission

AR = use ase required - = Non illustrrated part

<< RETURN TO GROUP INDEX

Air Ducting
Figure 24-610

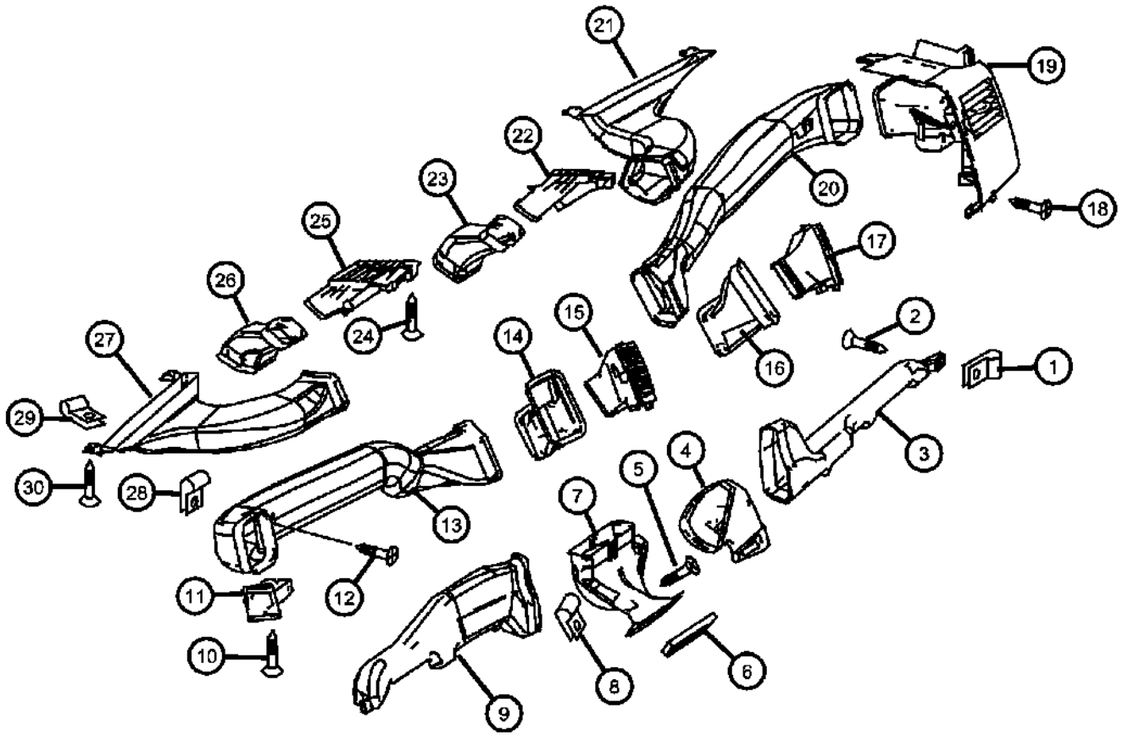

ITEM	PART NUMBER	QTY	LINE	SERIES	BODY	ENGINE	TRANS	TRIM	DESCRIPTION
20	68010417AA	1	2, 3, 6, 7			EG2, EXM			DUCT, AIR, Outside, Right
21	68010414AA	1	2, 3, 6, 7			EG2, EXM			DUCT, Defroster, Windshield, Right
22	68004769AA	1	2, 3, 6, 7			EG2, EXM			OUTLET, Air Conditioning & Heater, Long-Range Nozzle, Right
23	68010416AA	1	2, 3, 6, 7			EG2, EXM			DUCT, AIR, Long-Range Nozzle, Right
24	06104574AA	4	2, 3, 6, 7			EG2, EXM			SCREW, Tapping
25	68004768AA	1	2, 3, 6, 7			EG2, EXM			OUTLET, Air Conditioning & Heater, Long-Range Nozzle, Left
26	68004779AA	1	2, 3, 6, 7			EG2, EXM			DUCT, AIR, Long-Range Nozzle, Left
27	68004773AA	1	2, 3, 6, 7			EG2, EXM			DUCT, Defroster, Windshield, Left
28									NUT, Spring U Type
	68010366AA	2	3, 7		03, 05	EG2, EXM			Air Duct Attachment
		2	2, 3, 6, 7		13, 15, 17, 53, 55	EXM, EG2			Air Duct Attachment
29	68010366AA	2	2, 3, 6, 7		13, 15, 17, 53, 55	EG2, EXM			NUT, Spring U Type
30	06104574AA	4	2, 3, 6, 7			EG2, EXM			SCREW, Tapping

SPRINTER (VB)

SERIES	LINE	BODY	ENGINE	TRANSMISSION
L = LOWLINE	3 = HD DODGE 2WD 2 = Med. Duty DODGE 2WD	03 = CAB CHASSIS WHEEL BASE 3 05 = CAB CHASSIS WHEEL BASE 5 13 = 119 WB 53 = 119 WB 15 = VAN WHEEL BASE 5 55 = WAGON WHEEL BASE 5 17 = VAN WHEEL BASE 7	EG2 = 3.5L V6 Gas Engine EXM = 3.0L V6 Turbo Diesel Engine	DGZ = 5-Speed Auto W5A380 Transmission

Air Duct to Floor / Cargo / Passenger Van
Figure 24-640

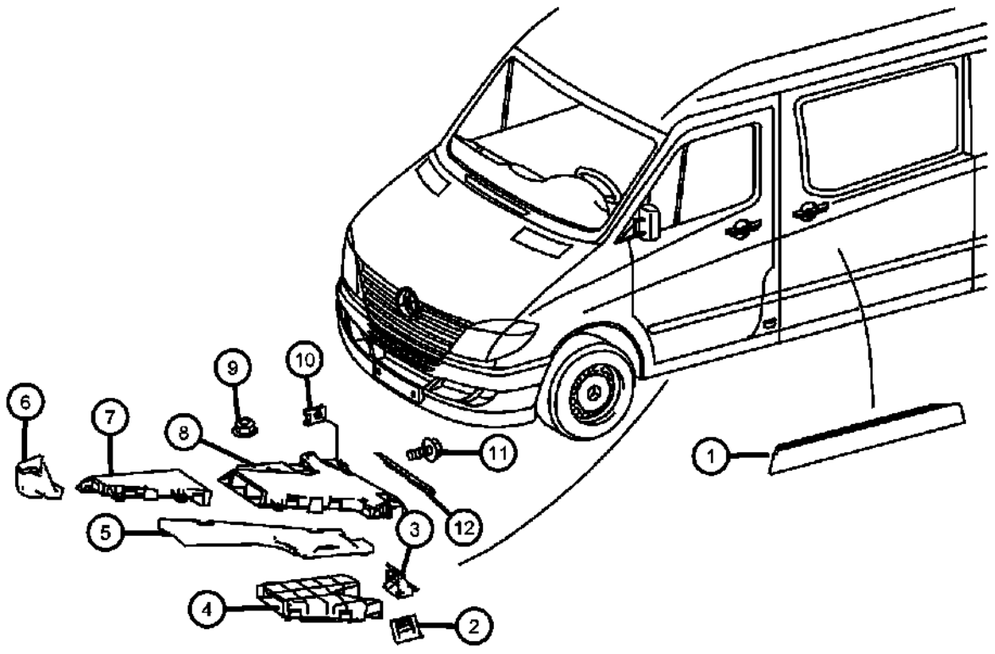

ITEM	PART NUMBER	QTY	LINE	SERIES	BODY	ENGINE	TRANS	TRIM	DESCRIPTION
1									DUCT, Floor
	1HE24XDVAA	1	2, 3, 6, 7		13, 15, 17, 53, 55	EG2, EXM			With [HDC], Rear
	1HE25XDVAA	1	2, 6		53, 55	EG2, EXM			With [HDC + CFF], Rear
	1HE26XDVAA	1	2, 6		53, 55	EG2, EXM			With [HDC + CFA], Rear
2									VENT
	1HE23NCVAA	1	2, 3, 6, 7		53, 55	EG2, EXM			Lateral, Rear
	1HE23XDVAA	1	2, 3, 6, 7		13, 15, 17, 53, 55	EG2, EXM			Lateral, Rear
3									VENT
	1HE22NCVAA	1	2, 3, 6, 7		53, 55	EG2, EXM			Rear Right
	1HE22XDVAA	1	2, 3, 6, 7		13, 15, 17, 53, 55	EG2, EXM			Rear Right
4	68012803AA	1	2, 3, 6, 7		13, 15, 17, 53, 55	EG2, EXM			DUCT, Floor
5									DUCT, Floor
	68012798AA	1	2, 3, 6, 7		13, 15, 17, 53, 55	EG2, EXM			
	68012799AA	1	2, 3, 6, 7		17, 13, 15	EG2, EXM			With [XGR+CW9]
		1	2, 3, 6, 7		53, 55	EG2, EXM			With [XGR+CW9]
6	68012797AA	1	2, 3, 6, 7		13, 15, 17, 53, 55	EG2, EXM			DUCT, FloorFront
7									DUCT, Floor
	68012800AA	1	2, 3, 6, 7		13, 15, 17, 53, 55	EG2, EXM			With [XGR]
	68012802AA	1	2, 3, 6, 7		13, 15, 17, 53, 55	EG2, EXM			With [XGR+CW9]
		1	2, 3, 6, 7		53, 55	EG2, EXM			With [XGR+CW9]
8	68012801AA	1	2, 3, 6, 7		13, 15, 17, 53, 55	EG2, EXM			DUCT, FloorRear
9	68004878AA	4	2, 3, 6, 7		13, 15, 17, 53, 55	EG2, EXM			NUT, Air Duct Attachment M6
10	06104734AA	3	2, 3, 6, 7		13, 15, 17, 53, 55	EG2, EXM			NUT, Attachment,Grid 4.2MM
11	06104566AA	7	2, 3, 6, 7		13, 15, 17, 53, 55	EG2, EXM			SCREW, Tapping, Air Duct on Floor 4.2x13
12	1HE21XDVAA	1	2, 3, 6, 7		13, 15, 17, 53, 55	EG2, EXM			DUCT, Floor

SPRINTER (VB)

SERIES	LINE	BODY	ENGINE	TRANSMISSION
L = LOWLINE	3 = HD DODGE 2WD 2 = Med. Duty DODGE 2WD	03 = CAB CHASSIS WHEEL BASE 3 05 = CAB CHASSIS WHEEL BASE 5 13 = 119 WB 53 = 119 WB 15 = VAN WHEEL BASE 5 55 = WAGON WHEEL BASE 5 17 = VAN WHEEL BASE 7	EG2 = 3.5L V6 Gas Engine EXM = 3.0L V6 Turbo Diesel Engine	DGZ = 5-Speed Auto W5A380 Transmission

AR = use ase required - = Non illustrrated part

<< RETURN TO GROUP INDEX

Air Ducts With Rear Air Conditioner
Figure 24-650

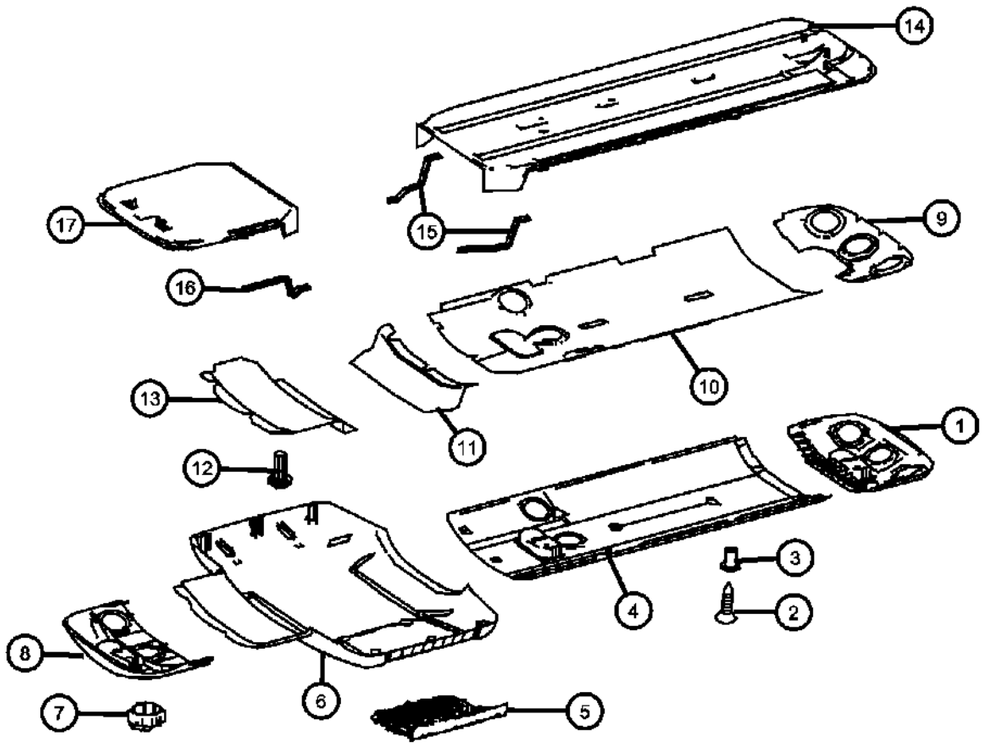

ITEM	PART NUMBER	QTY	LINE	SERIES	BODY	ENGINE	TRANS	TRIM	DESCRIPTION
1	1GZ43XDVAA	1	2, 6		53, 55	EG2, EXM			PANEL
2									SCREW
	05104609AA	3	3, 7		03, 05	EG2, EXM			Air Duct Attachment4.8x13
		3	2, 3, 6, 7		13, 15, 17, 53, 55	EG2, EXM			Air Duct Attachment4.8x13
3	68012814AA	8	2, 6		53, 55	EG2, EXM			BUSHING, Air Duct Attachment
4	1GZ43XDVAA	1	2, 6		53, 55	EG2, EXM			PANEL
5	1HE31XDVAA	1	2, 6		53, 55	EG2, EXM			GRILLE
6	1GZ45XDVAA	1	2, 6		53, 55	EG2, EXM			COVER, Center Distribution
7	68012824AA	9	2, 6		53, 55	EG2, EXM			VENT
8	1GZ42XDVAA	1	2, 3, 6, 7		53, 55	EG2, EXM			COVER, Center DistributionFront
9	1GZ44XDVAA	1	2, 6		53, 55	EG2, EXM			PANEL
10	1GZ43XDVAA	1	2, 6		53, 55	EG2, EXM			PANEL
11	68012821AA	1	2, 6		53, 55	EG2, EXM			INSULATOR
12	68012820AA	1	2, 6		53, 55	EG2, EXM			INSULATOR
13	06104625AA	2	2, 3, 6, 7		13, 15, 17, 53, 55	EG2, EXM			SCREW
14	68012810AA	1	2, 6		53, 55	EG2, EXM			DUCT
15	68012811AA	2	2, 6		53, 55	EG2, EXM			SEAL
16	68012808AA	2	2, 6		53, 55	EG2, EXM			SEAL
17	68012807AA	1	2, 6		53, 55	EG2, EXM			DUCT

SPRINTER (VB)

SERIES	LINE	BODY	ENGINE	TRANSMISSION
L = LOWLINE	3 = HD DODGE 2WD 2 = Med. Duty DODGE 2WD	03 = CAB CHASSIS WHEEL BASE 3 05 = CAB CHASSIS WHEEL BASE 5 13 = 119 WB 53 = 119 WB 15 = VAN WHEEL BASE 5 55 = WAGON WHEEL BASE 5 17 = VAN WHEEL BASE 7	EG2 = 3.5L V6 Gas Engine EXM = 3.0L V6 Turbo Diesel Engine	DGZ = 5-Speed Auto W5A380 Transmission

AR = use ase required - = Non illustrrated part

<< RETURN TO GROUP INDEX

Group - 25

Emission Systems

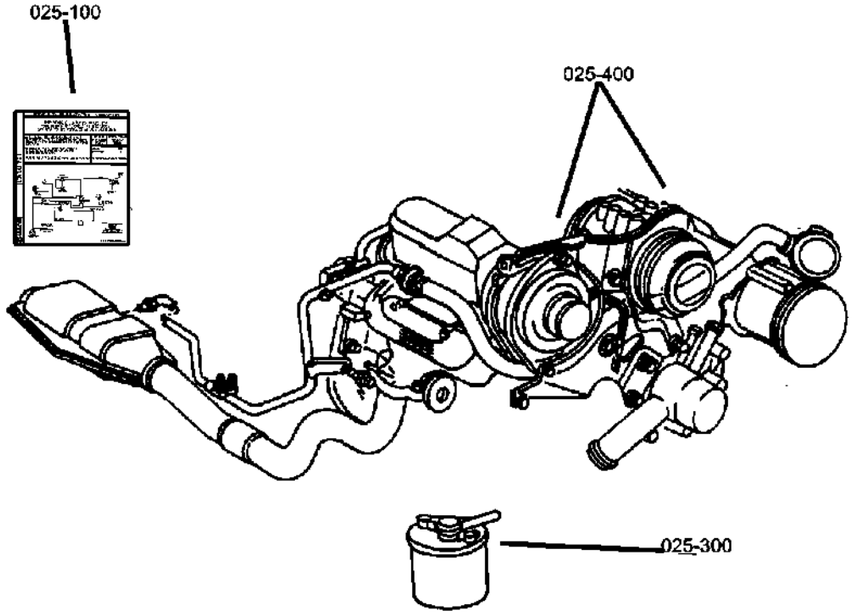

025-200 EGR System	**025-300** Vacuum Canister	**025-400** Emission Harness	**025-500** Air Pumps
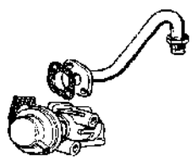		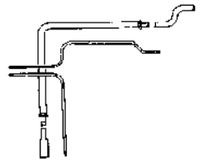	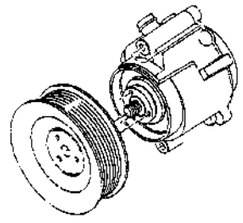

Group - 25 Emission Systems

Illustration Title — Group-Fig. No.

EGR System
EGR Valve & Related Parts ..... Fig. 25 - 210

Vacuum Canister
Fuel Tank Ventilation System & Charcoal Canister ..... Fig. 25 - 310

Emission Harness
Emission Harness ..... Fig. 25 - 410
Change Over Valve ..... Fig. 25 - 420

Air Pumps
Air Pump & Related Parts ..... Fig. 25 - 510
Vacuum Pump ..... Fig. 25 - 520

EGR Valve & Related Parts
Figure 25-210

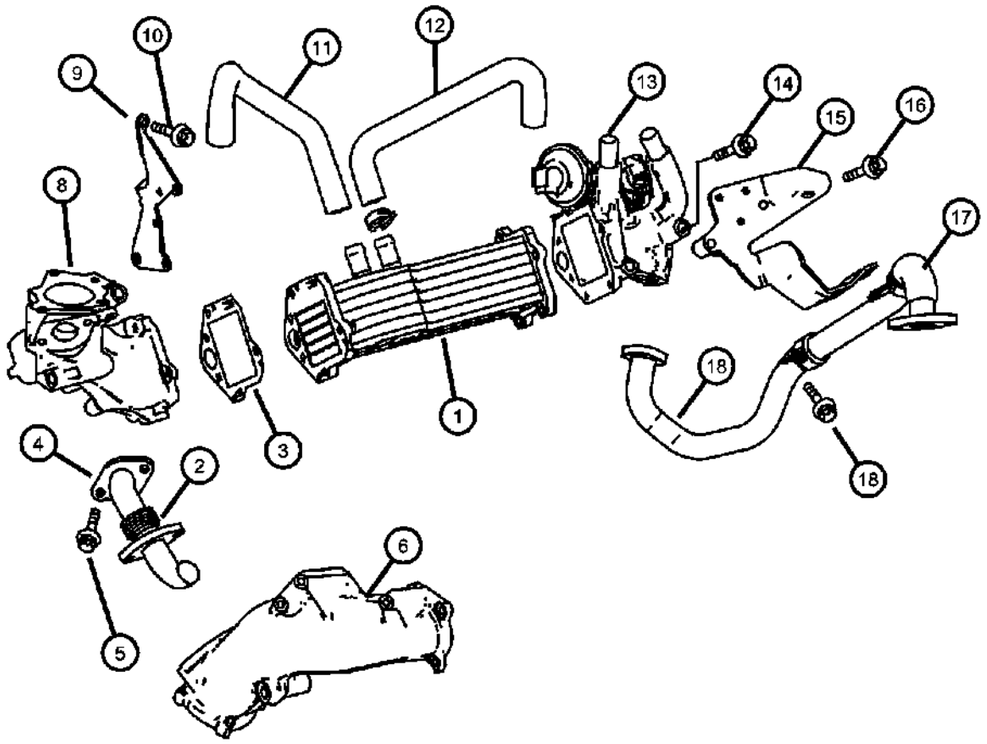

ITEM	PART NUMBER	QTY	LINE	SERIES	BODY	ENGINE	TRANS	TRIM	DESCRIPTION
NOTES:									
Sales Code									
[EXM] = 3.0L V6 Turbo Diesel Engine									
1	68014095AA	1	2, 3, 6, 7			EXM	DGZ		COOLER
2	68012322AA	1	2, 3, 6, 7			EXM	DGZ		TUBE
3	68014096AA	1	2, 3, 6, 7			EXM	DGZ		GASKET
4	05175695AA	1	2, 3, 6, 7			EXM	DGZ		GASKET
5	06104682AA	2	2, 3, 6, 7			EXM	DGZ		BOLT, [M6x19]
6	68012320AA	1	2, 3, 6, 7			EXM	DGZ		MANIFOLD, Intake, Transverse Tube Charge Air Pipe
-7	68012326AA	1	2, 3, 6, 7			EXM	DGZ		GASKET
8	68014081AA	1	2, 3, 6, 7			EXM	DGZ		HOUSING
9	68014098AA	1	2, 3, 6, 7			EXM	DGZ		BRACKET
10	05137660AA	2	2, 3, 6, 7			EXM	DGZ		SCREW
11	68014092AA	1	2, 3, 6, 7			EXM	DGZ		HOSE
12	68014093AA	1	2, 3, 6, 7			EXM	DGZ		HOSE
13	68014099AA	1	2, 3, 6, 7			EXM	DGZ		VALVE
14	06104036AA	2	2, 3, 6, 7			EXM	DGZ		SCREW
15	68014097AA	1	2, 3, 6, 7			EXM	DGZ		BRACKET
16	06104005AA	1	2, 3, 6, 7			EXM	DGZ		BOLT, 6 Lobe External Head, M6X1.00X16.00
17	68014094AA	1	2, 3, 6, 7			EXM	DGZ		TUBE
18	06104004AA	2	2, 3, 6, 7			EXM	DGZ		BOLT

SPRINTER (VB)

SERIES	LINE	BODY	ENGINE	TRANSMISSION
L = LOWLINE	3 = HD DODGE 2WD 2 = Med. Duty DODGE 2WD	03 = CAB CHASSIS WHEEL BASE 3 05 = CAB CHASSIS WHEEL BASE 5 13 = 119 WB 53 = 119 WB 15 = VAN WHEEL BASE 5 55 = WAGON WHEEL BASE 5 17 = VAN WHEEL BASE 7	EG2 = 3.5L V6 Gas Engine EXM = 3.0L V6 Turbo Diesel Engine	DGZ = 5-Speed Auto W5A380 Transmission

Fuel Tank Ventilation System & Charcoal Canister
Figure 25-310

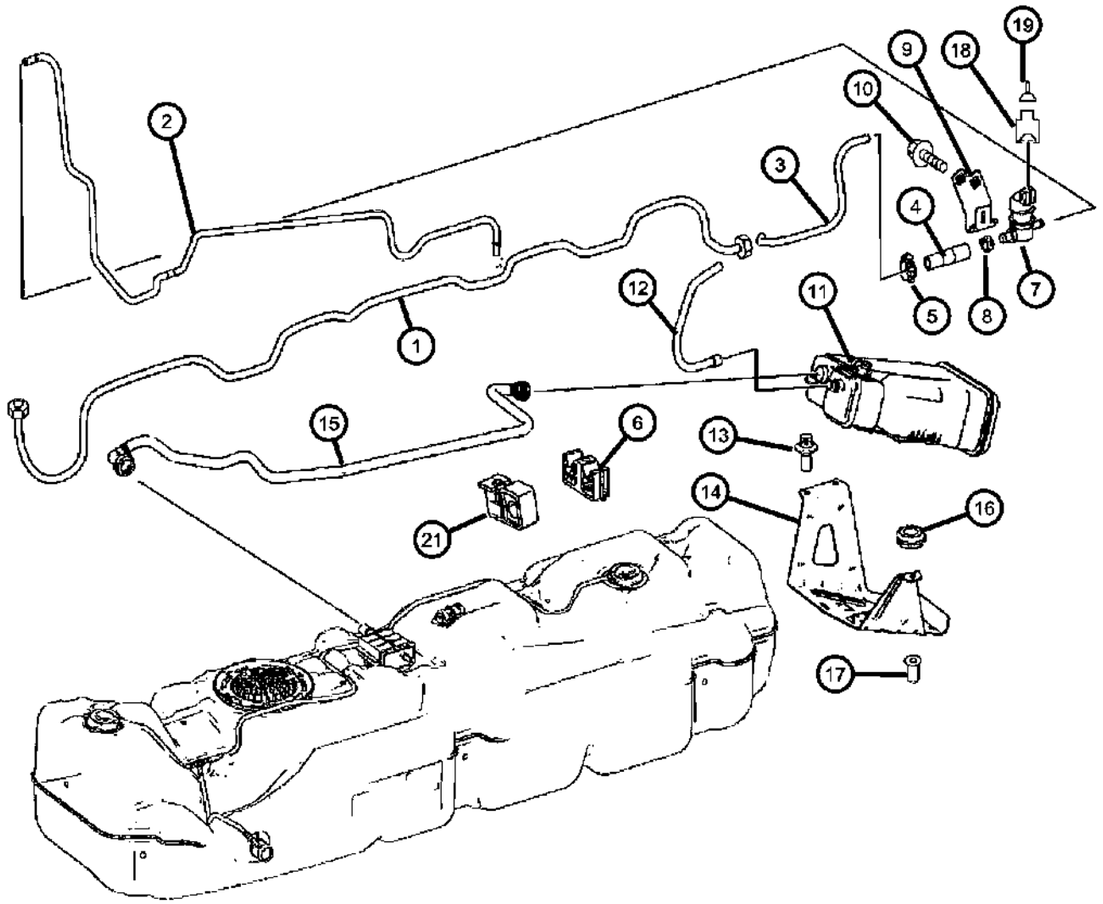

ITEM	PART NUMBER	QTY	LINE	SERIES	BODY	ENGINE	TRANS	TRIM	DESCRIPTION
1									HOSE, Purge
	68013533AA	1	3, 7		05	EG2	DGZ		
	68013534AA	1	2, 6		13, 15, 17, 53, 55	EG2	DGZ		
		1	3		05	EG2	DGZ		
2									HOSE, Purge
	68013537AA	1	2, 6		13, 15, 17, 53, 55	EG2	DGZ		
		1	3, 7		03, 05	EG2	DGZ		
3									HOSE, Purge
	68013539AA	1	3, 7		03, 05	EG2	DGZ		
		1	2, 6		13, 15, 17, 53, 55	EG2	DGZ		
4									HOSE, HOSE
	68023887AA	1	2, 6		13, 15, 17, 53, 55	EG2	DGZ		Regeneration Line
		1	3		05	EG2			Regeneration Line
5	06104822AA	1	2, 3, 6, 7			EG2	DGZ		CLAMP, Hose
6	05137250AA	4	2, 3, 6			EG2	DGZ		CLIP, Regeneration Line
7	68028735AA	1	2, 3, 6, 7			EG2	DGZ		VALVE, Purge Control
8									CLAMP
	05080439AB	1	2, 6		13, 15, 17, 53, 55	EG2	DGZ		
		1	3, 7		03, 05	EG2	DGZ		
9									BRACKET, Valve
	68013540AA	1	3, 7		03, 05	EG2	DGZ		Regeneration Valve
		1	2, 6		13, 15, 17, 53, 55	EG2	DGZ		Regeneration Valve
10	05126197AA	2	2, 3, 6, 7			EG2	DGZ		SCREW, Bracket To Canister
11	68013541AA	1	2, 3, 6, 7			EG2	DGZ		CANISTER, Fuel Vapor, Charcoal Canister
12									HOSE, Breather
	68013542AA	1	3, 7		03, 05	EG2	DGZ		
		1	2, 6		13, 15, 17, 53, 55	EG2	DGZ		
13	06104022AB	1	2, 3, 6, 7			EG2	DGZ		SCREW
14									BRACKET, Vapor Canister

SPRINTER (VB)

SERIES	LINE	BODY	ENGINE	TRANSMISSION
L = LOWLINE	3 = HD DODGE 2WD 2 = Med. Duty DODGE 2WD	03 = CAB CHASSIS WHEEL BASE 3 05 = CAB CHASSIS WHEEL BASE 5 13 = 119 WB 53 = 119 WB 15 = VAN WHEEL BASE 5 55 = WAGON WHEEL BASE 5 17 = VAN WHEEL BASE 7	EG2 = 3.5L V6 Gas Engine EXM = 3.0L V6 Turbo Diesel Engine	DGZ = 5-Speed Auto W5A380 Transmission

Fuel Tank Ventilation System & Charcoal Canister
Figure 25-310

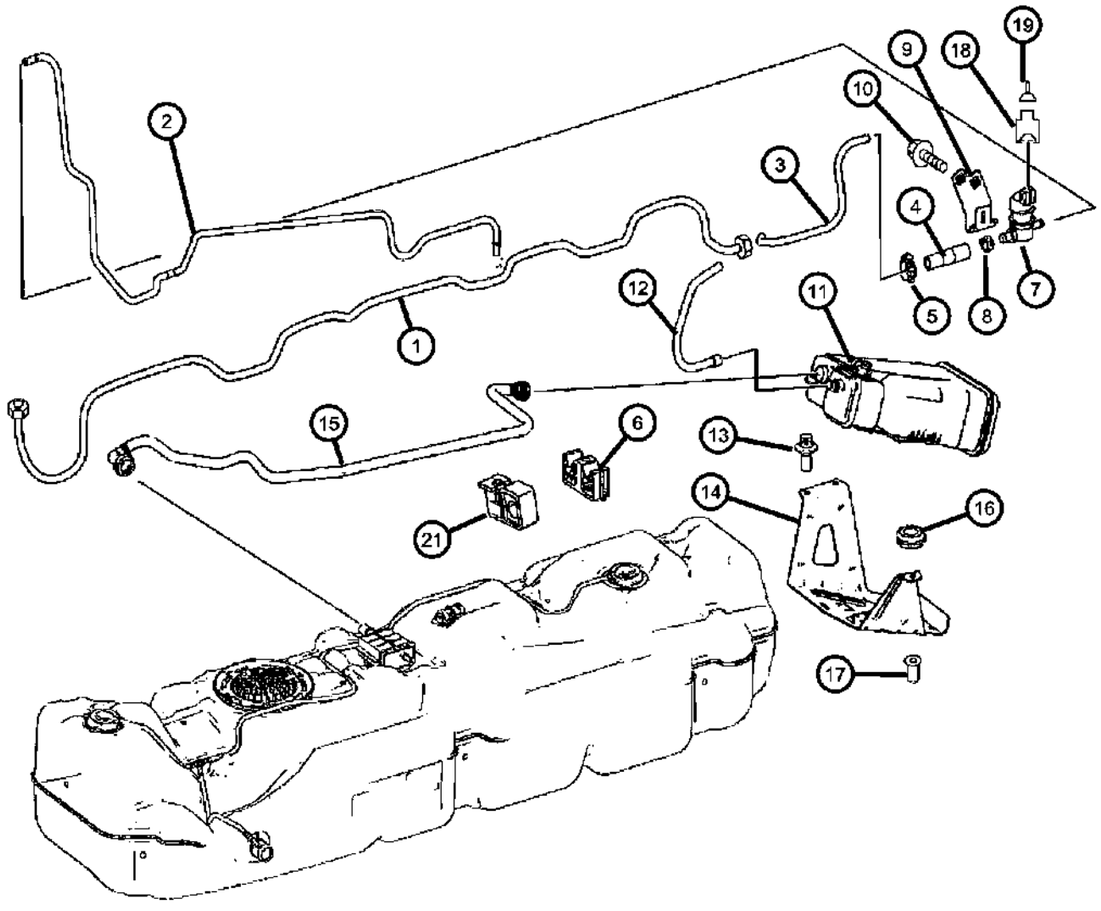

ITEM	PART NUMBER	QTY	LINE	SERIES	BODY	ENGINE	TRANS	TRIM	DESCRIPTION
	68020914AA	1	3, 7		03, 05, 13, 15, 17	EG2	DGZ		
	68020915AA	1	2, 6		13, 15, 17, 53, 55	EG2	DGZ		
		1	3		05	EG2	DGZ		
15									HOSE, Breather
	68013545AA	1	3, 7		05	EG2	DGZ		
	68013546AA	1	2, 6			EG2	DGZ		
		1	3		05	EG2	DGZ		
16									GROMMET
	05097181AA	1	3, 7		03, 05	EG2	DGZ		
		1	2, 6		13, 15, 17, 53, 55	EG2	DGZ		
17									NUTSERT, Rivet
	06105175AA	3	3, 7		03, 05	EG2	DGZ		
		3	2, 6		13, 15, 17, 53, 55	EG2	DGZ		
18	05120749AA	1	2, 3, 6, 7			EG2, EXM	DGZ		CONNECTOR, Regeneration Valve [2PIN; Y58/1]
19	05103880AA	AR	2, 3, 6, 7			EG2, EXM	DGZ		TERMINAL, [0.5 - 1.0 MM2; JPT; Y58/1]
-20									GASKET
	05120858AA	2	2, 3, 6, 7			EG2, EXM	DGZ		Dummy Plug [Y58/1]
	05103661AA	1	2, 3, 6, 7			EG2, EXM	DGZ		[0.5 - 1.0 MM; Y58/1]
21	68013535AA	2	3, 7		05	EG2	DGZ		RETAINER

SPRINTER (VB)

SERIES	LINE	BODY	ENGINE	TRANSMISSION
L = LOWLINE	3 = HD DODGE 2WD 2 = Med. Duty DODGE 2WD	03 = CAB CHASSIS WHEEL BASE 3 05 = CAB CHASSIS WHEEL BASE 5 13 = 119 WB 53 = 119 WB 15 = VAN WHEEL BASE 5 55 = WAGON WHEEL BASE 5 17 = VAN WHEEL BASE 7	EG2 = 3.5L V6 Gas Engine EXM = 3.0L V6 Turbo Diesel Engine	DGZ = 5-Speed Auto W5A380 Transmission

AR = use ase required - = Non illustrrated part

<< RETURN TO GROUP INDEX

Emission Harness
Figure 25-410

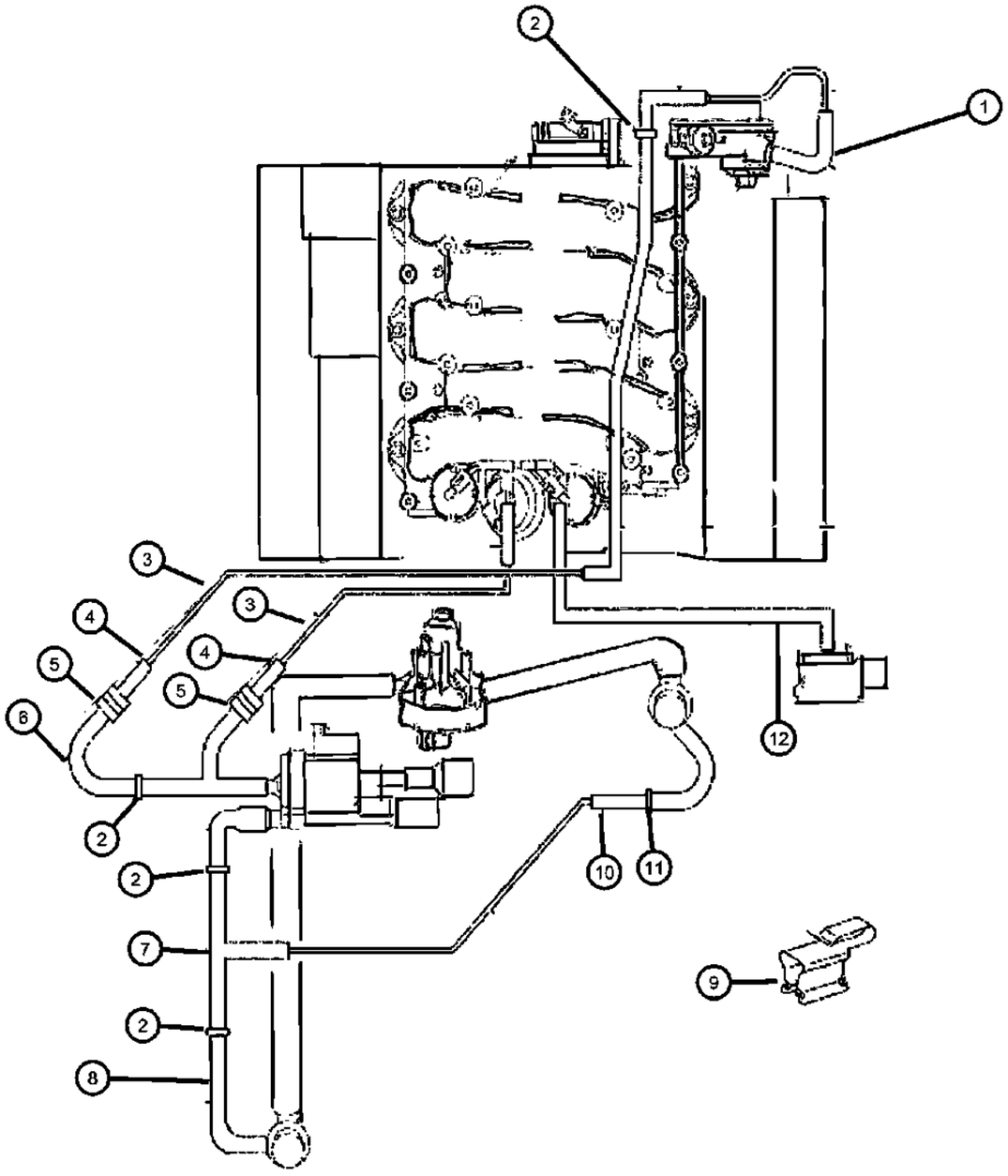

ITEM	PART NUMBER	QTY	LINE	SERIES	BODY	ENGINE	TRANS	TRIM	DESCRIPTION
1	05097187AA	1	2, 3, 6, 7			EG2	DGZ		HOSE
2	05080337AA	1	2, 3, 6, 7			EG2	DGZ		CONNECTOR
3	05098831AA	21	2, 3, 6, 7			EG2	DGZ		HOSE, Vacuum
4	05097844AA	0	2, 3, 6, 7			EG2	DGZ		HOSE, Bulk Hose 15 Meters
5	05096374AC	1	2, 3, 6, 7			EG2	DGZ		VALVE, Check
6	05097187AA	1	2, 3, 6, 7			EG2	DGZ		HOSE
7	05117460AA	1	2, 3, 6, 7			EG2	DGZ		HOSE, HOSE
8	05080390AA	1	2, 3, 6, 7			EG2	DGZ		HOSE
9	05098353AA	1	2, 3, 6, 7			EG2	DGZ		CLAMP, Cable
10	05097844AA	2	2, 3, 6, 7			EG2	DGZ		HOSE
11	05080337AA	1	2, 3, 6, 7			EG2	DGZ		CONNECTOR, Vacuum Lines
12	05097844AA	2	2, 3, 6, 7			EG2	DGZ		HOSE

SPRINTER (VB)

SERIES	LINE	BODY	ENGINE	TRANSMISSION
L = LOWLINE	3 = HD DODGE 2WD 2 = Med. Duty DODGE 2WD	03 = CAB CHASSIS WHEEL BASE 3 05 = CAB CHASSIS WHEEL BASE 5 13 = 119 WB 53 = 119 WB 15 = VAN WHEEL BASE 5 55 = WAGON WHEEL BASE 5 17 = VAN WHEEL BASE 7	EG2 = 3.5L V6 Gas Engine EXM = 3.0L V6 Turbo Diesel Engine	DGZ = 5-Speed Auto W5A380 Transmission

AR = use ase required - = Non illustrrated part

<< RETURN TO GROUP INDEX

Change Over Valve
Figure 25-420

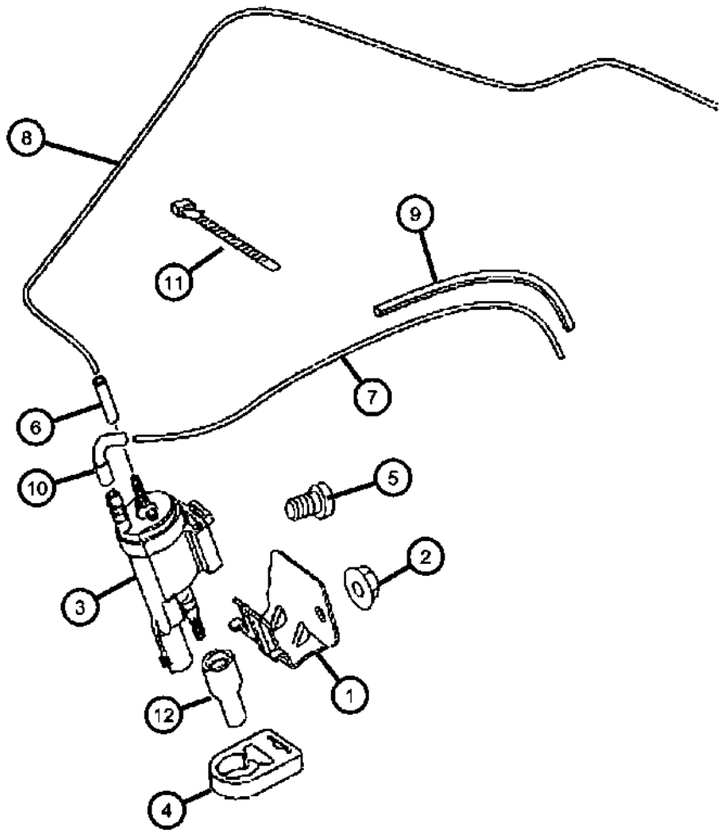

ITEM	PART NUMBER	QTY	LINE	SERIES	BODY	ENGINE	TRANS	TRIM	DESCRIPTION
1	68005318AA	1	2, 3, 6, 7			EXM	DGZ		BRACKET
2									NUT
	68004878AA	1	3, 7		03, 05	EG2, EXM	DGZ		
		1	2, 3, 6, 7		13, 15, 17, 53, 55	EG2, EXM	DGZ		
3									SOLENOID, Vacuum
	05099822AA	1	2, 3, 6, 7		13, 15, 17, 53, 55	EXM	DGZ		
		1	3, 7		03, 05	EXM	DGZ		
4									BRACKET, Vacuum Valve
	05119974AA	1	2, 3, 6, 7		13, 15, 17, 53, 55	EXM	DGZ		
		1	3, 7		03, 05	EXM	DGZ		
5	06104004AA	1	2, 3, 6, 7			EXM	DGZ		BOLT
6	06104004AA	1							HOSE 1 METER, Roll Stock, (NOT SERVICED)
7	05125911AA	22	2, 3, 6, 7			EXM	DGZ		HOSE, Vacuum
8	05125911AA	22	2, 3, 6, 7			EXM	DGZ		HOSE, Vacuum, From Change Over Valve To Check Valve
9									HOSE
	05097844AA	4	2, 3, 6, 7		13, 15, 17, 53, 55	EXM	DGZ		[8x3.5MM]
		4	3, 7		03, 05	EXM	DGZ		[8x3.5MM]
10									HOSE, HOSE
	05117462AA	1	2, 3, 6, 7		13, 15, 17, 53, 55	EXM	DGZ		Molded Hose
		1	3, 7		03, 05	EXM	DGZ		Molded Hose
11									STRAP
	05096424AA	1	2, 6		13, 15, 17, 53, 55	EXM	DGZ		
		1	3, 7		03, 05	EXM	DGZ		
12	05097188AA	1	2, 3, 6, 7		13, 15, 17, 53, 55	EXM	DGZ		BOOT

SPRINTER (VB)

SERIES	LINE	BODY	ENGINE	TRANSMISSION
L = LOWLINE	3 = HD DODGE 2WD 2 = Med. Duty DODGE 2WD	03 = CAB CHASSIS WHEEL BASE 3 05 = CAB CHASSIS WHEEL BASE 5 13 = 119 WB 53 = 119 WB 15 = VAN WHEEL BASE 5 55 = WAGON WHEEL BASE 5 17 = VAN WHEEL BASE 7	EG2 = 3.5L V6 Gas Engine EXM = 3.0L V6 Turbo Diesel Engine	DGZ = 5-Speed Auto W5A380 Transmission

Air Pump & Related Parts
Figure 25-510

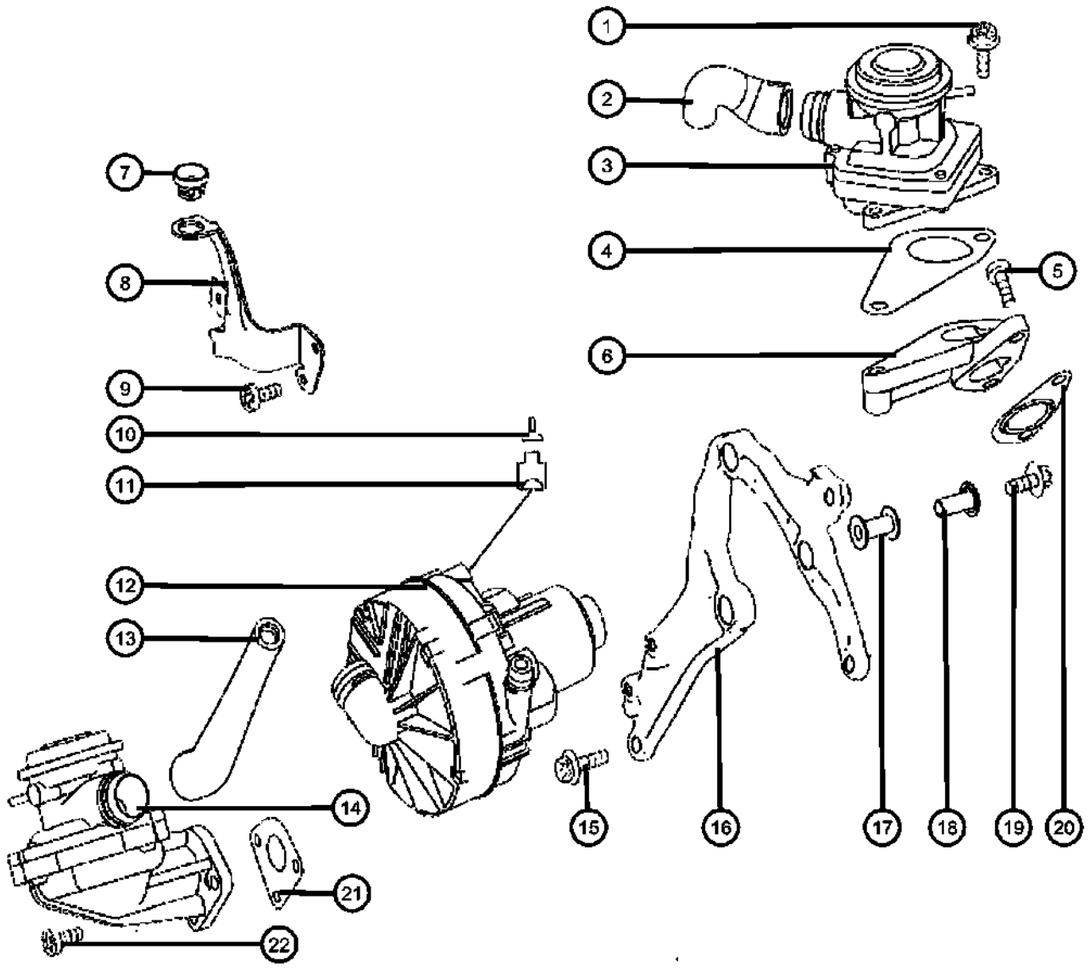

ITEM	PART NUMBER	QTY	LINE	SERIES	BODY	ENGINE	TRANS	TRIM	DESCRIPTION
1	68005186AA	3	2, 3, 6, 7			EG2	DGZ		SCREW
2	68011778AA	1	2, 3, 6, 7			EG2	DGZ		HOSE
3	68011787AA	1	2, 3, 6, 7			EG2	DGZ		VALVE
4	68011789AA	1	2, 3, 6, 7			EG2	DGZ		GASKET
5	68005186AA	2	2, 3, 6, 7			EG2	DGZ		SCREW
6	68011790AA	1	2, 3, 6, 7			EG2	DGZ		VALVE
7	68005688AA	1	2, 3, 6, 7			EG2	DGZ		INSULATOR
8	68011785AA	1	2, 3, 6, 7			EG2	DGZ		BRACKET, Air Pump
9	06104675AA	2	2, 3, 6, 7			EG2	DGZ		SCREW
10	05133478AA	AR	2, 3, 6, 7			EG2	DGZ		TERMINAL
11	05138040AA	1	2, 3, 6, 7			EG2	DGZ		CONNECTOR
12	68011776AA	1	2, 3, 6, 7			EG2	DGZ		PUMP, Air
13	68011781AA	1	2, 3, 6, 7			EG2	DGZ		HOSE
14	68011792AA	1	2, 3, 6, 7			EG2	DGZ		VALVE
15	68005186AA	3	2, 3, 6, 7			EG2	DGZ		SCREW
16	68011774AA	1	2, 3, 6, 7			EG2	DGZ		BRACKET, Air Pump
17	05135456AA	3	2, 3, 6, 7			EG2	DGZ		DAMPER, Shock Absorber
18	68011775AA	3	2, 3, 6, 7			EG2	DGZ		SPACER
19	06104124AA	3	2, 3, 6, 7			EG2	DGZ		BOLT
20	68011788AA	1	2, 3, 6, 7			EG2	DGZ		GASKET
21	68011793AA	1	2, 3, 6, 7			EG2	DGZ		GASKET
22	68005186AA	3	2, 3, 6, 7			EG2	DGZ		SCREW

SPRINTER (VB)

SERIES	LINE	BODY	ENGINE	TRANSMISSION
L = LOWLINE	3 = HD DODGE 2WD 2 = Med. Duty DODGE 2WD	03 = CAB CHASSIS WHEEL BASE 3 05 = CAB CHASSIS WHEEL BASE 5 13 = 119 WB 53 = 119 WB 15 = VAN WHEEL BASE 5 55 = WAGON WHEEL BASE 5 17 = VAN WHEEL BASE 7	EG2 = 3.5L V6 Gas Engine EXM = 3.0L V6 Turbo Diesel Engine	DGZ = 5-Speed Auto W5A380 Transmission

AR = use ase required - = Non illustrrated part

<< RETURN TO GROUP INDEX

Vacuum Pump
Figure 25-520

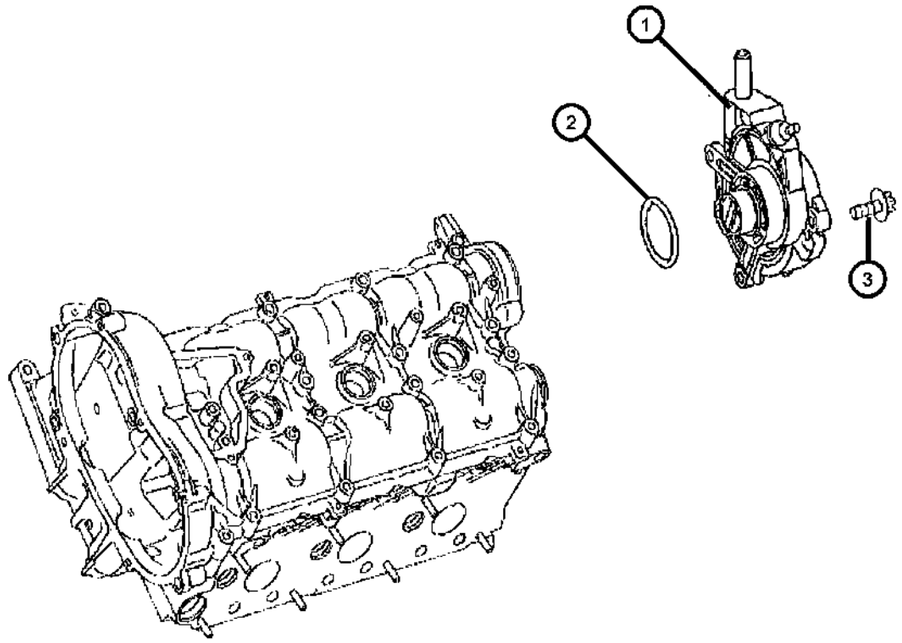

ITEM	PART NUMBER	QTY	LINE	SERIES	BODY	ENGINE	TRANS	TRIM	DESCRIPTION
1	68017743AA	1	2, 3, 6, 7			EG2	DGZ		PUMP, Air, Vacuum Pump
2	68028233AA	1	2, 3, 6, 7			EG2	DGZ		O RING
3	06104006AA	4	2, 3, 6, 7			EG2	DGZ		BOLT, Torx Socket Head, M6X1.00X20.00

SPRINTER (VB)

SERIES	LINE	BODY	ENGINE	TRANSMISSION
L = LOWLINE	3 = HD DODGE 2WD 2 = Med. Duty DODGE 2WD	03 = CAB CHASSIS WHEEL BASE 3 05 = CAB CHASSIS WHEEL BASE 5 13 = 119 WB 53 = 119 WB 15 = VAN WHEEL BASE 5 55 = WAGON WHEEL BASE 5 17 = VAN WHEEL BASE 7	EG2 = 3.5L V6 Gas Engine EXM = 3.0L V6 Turbo Diesel Engine	DGZ = 5-Speed Auto W5A380 Transmission

Group - DVB

Doors and Related Parts

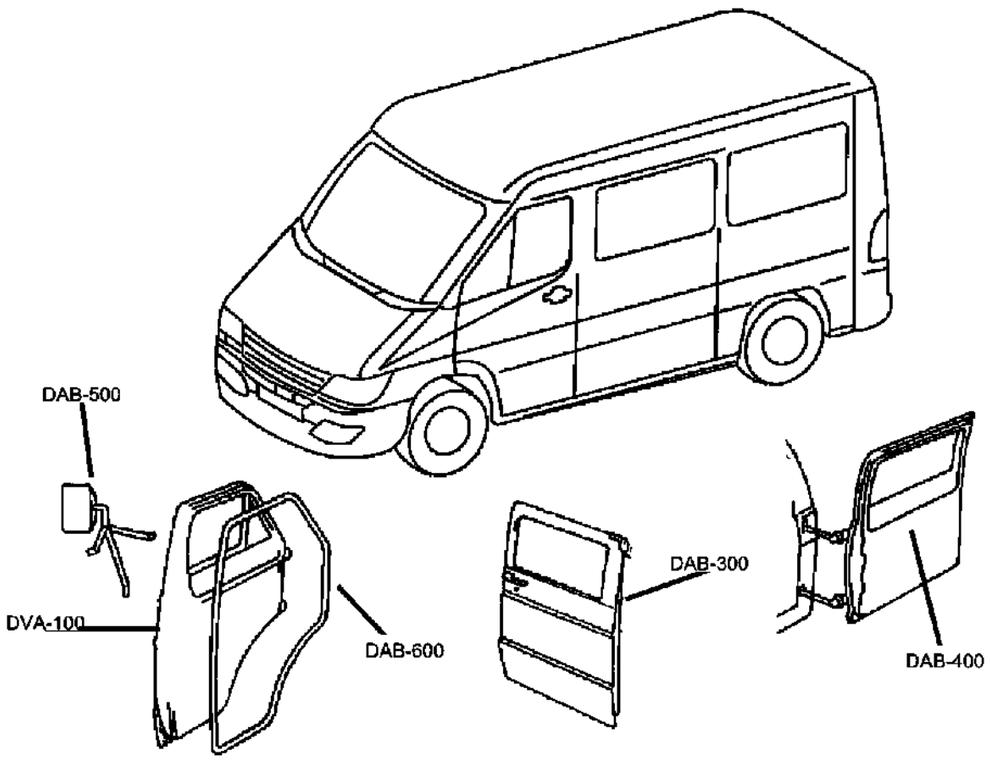

DVB-100 Front Door	DVB-300 Door, Sliding Cargo	DVB-400 Door, Dual and Single Cargo	DVB-500 Exterior Mirror
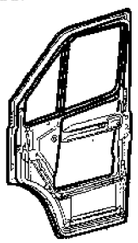		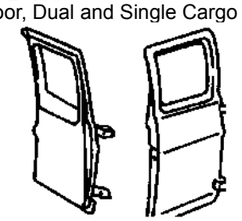	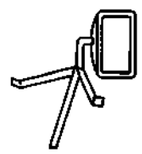

Group - DVB Doors and Related Parts

Illustration Title — Group-Fig. No.

Front Door
Front Door ..... Fig. DVB - 110
Front Door Window Regulator & Glass ..... Fig. DVB - 120
Door Handle & Lock Set ..... Fig. DVB - 130
Door Panelling ..... Fig. DVB - 140

Door, Sliding Cargo
Sliding Door ..... Fig. DVB - 305
Door Drive Mechanism ..... Fig. DVB - 310
Sliding Door Rail and Suspension ..... Fig. DVB - 320
Sliding Door, Inside Handle and Locking System ..... Fig. DVB - 330

Door, Dual and Single Cargo
Rear Door Panel ..... Fig. DVB - 410
Hinges and Hardware ..... Fig. DVB - 420
Right Rear Door Locking System ..... Fig. DVB - 430
Left Rear Door Locking System ..... Fig. DVB - 440

Exterior Mirror
Outside Rear View Mirror ..... Fig. DVB - 510

Front Door
Figure DVB-110

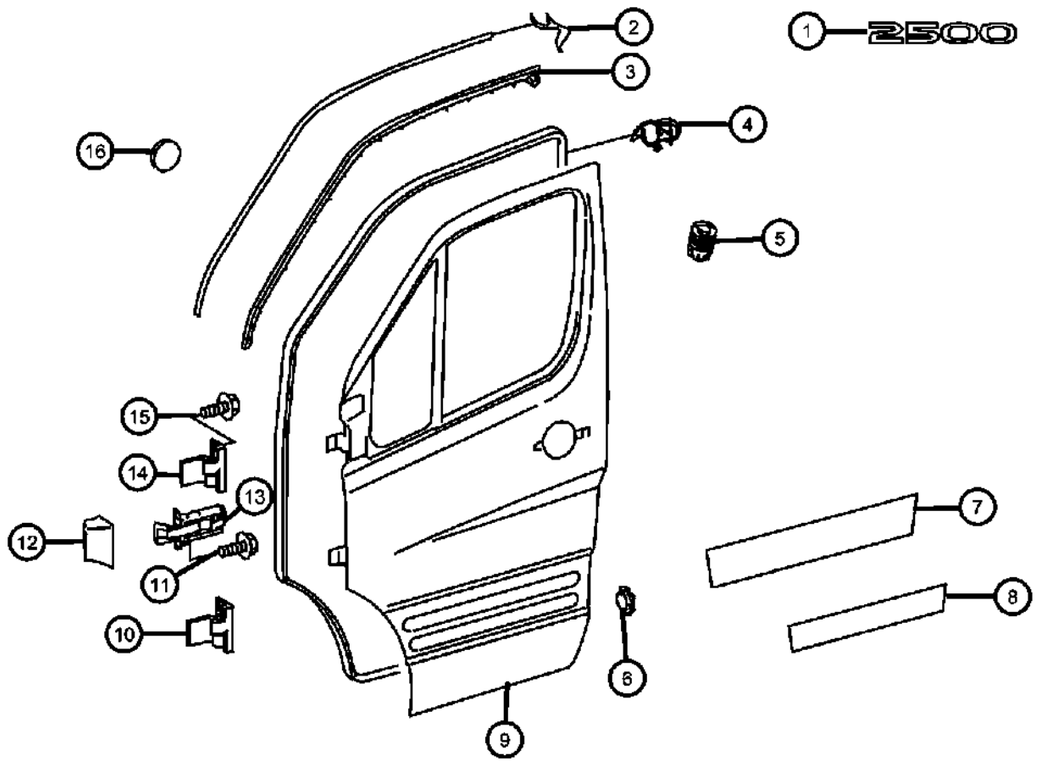

ITEM	PART NUMBER	QTY	LINE	SERIES	BODY	ENGINE	TRANS	TRIM	DESCRIPTION
1	55077331AB	2	2	L	13, 15, 17, 53, 55				NAMEPLATE, Ram 2500
2	68005103AA	1	2, 3, 6, 7	L					SEAL, Door, Top, Right Door
3	68009959AA	1	2, 3, 6, 7	L					SEAL, Door, Front, Left Door
4	68014670AA	2	2, 3, 6, 7	L					SEAL, Door
5	05104944AA	1	2, 3, 6, 7	L	13, 15, 17, 53, 55				BUMPER, Door, Door Rear, Bottom Left
6	68006360AA	1	2, 3, 6, 7	L	13, 15, 17, 53, 55				PLUG, Access Hole, 15 mm, 20MM
7	68009713AA	1	2, 3, 6, 7	L					INSULATION, Top, Left Door
8	68006519AA	1	2, 3, 6, 7	L	13, 15, 17, 53, 55				INSULATIONLeft Door
9									DOOR, Front
	68009944AA	1	2, 3, 6, 7	L					Left
	68010067AA	1	2, 3, 6, 7	L					Right
10									HINGE, Door
	68010074AA	1	3, 7	L	03, 05				Bottom Right
		1	2, 3, 6, 7	L	13, 15, 17, 53, 55				Bottom Right
11	68018257AA	3	2, 3, 6, 7	L					SCREW
12	68009967AA	2	2, 3, 6, 7	L					SEAL, Door Check
13									CHECK, Front Door
	68009966AA	1	3, 7	L	03, 05				
		1	2, 3, 6, 7	L	13, 15, 17, 53, 55				
14									HINGE, Door
	68009954AA	1	3, 7	L	03, 05				Top Left
		1	2, 3, 6, 7	L	13, 15, 17, 53, 55				Top Left
	68010073AA	1	3, 7	L	03, 05				Top Right
		1	2, 3, 6, 7	L	13, 15, 17, 53, 55				Top Right
15									SCREW
	06104076AA	2	3, 7	L	03, 05				Hinge Top Left M8x20
		2	2, 3, 6, 7	L	13, 15, 17, 53, 55				Hinge Top Left M8x20
16									FOIL, Insulator

SPRINTER (VB)

SERIES	LINE	BODY	ENGINE	TRANSMISSION
L = LOWLINE	3 = HD DODGE 2WD 2 = Med. Duty DODGE 2WD	03 = CAB CHASSIS WHEEL BASE 3 05 = CAB CHASSIS WHEEL BASE 5 13 = 119 WB 53 = 119 WB 15 = VAN WHEEL BASE 5 55 = WAGON WHEEL BASE 5 17 = VAN WHEEL BASE 7	EG2 = 3.5L V6 Gas Engine EXM = 3.0L V6 Turbo Diesel Engine	DGZ = 5-Speed Auto W5A380 Transmission

Front Door
Figure DVB-110

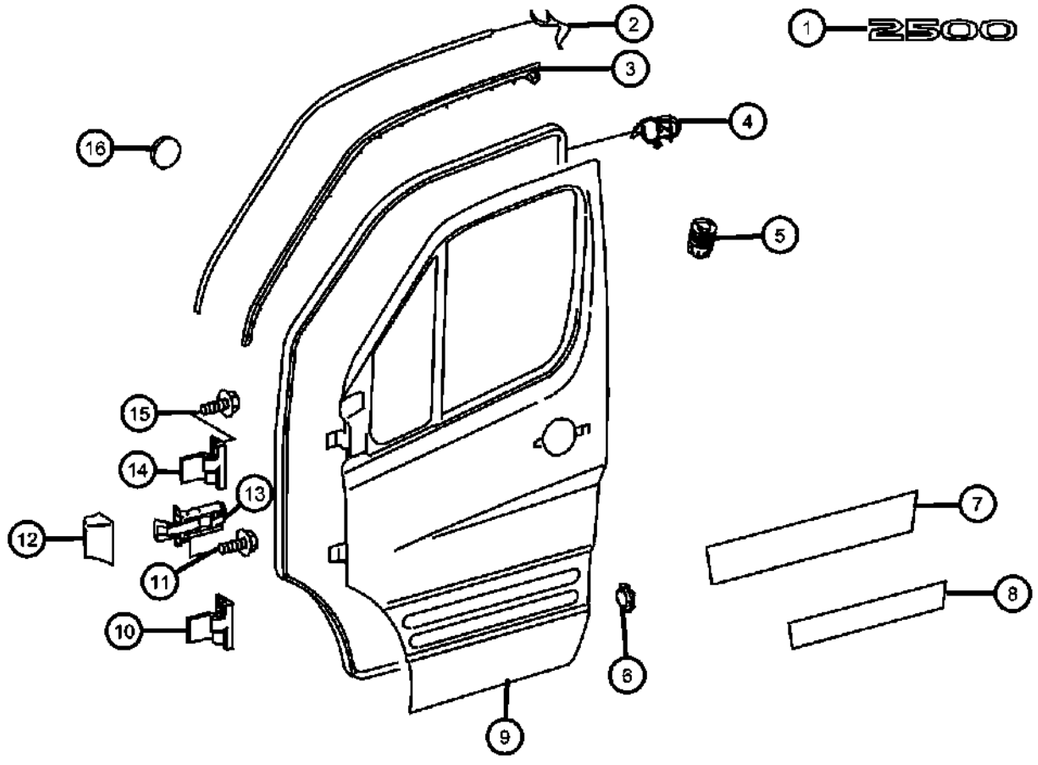

ITEM	PART NUMBER	QTY	LINE	SERIES	BODY	ENGINE	TRANS	TRIM	DESCRIPTION
	05099253AA	1	2, 3, 6, 7	L	13, 15, 17, 53, 55				22MM
		1	3, 7	L	03, 05				22MM

SPRINTER (VB)

SERIES	LINE	BODY	ENGINE	TRANSMISSION
L = LOWLINE	3 = HD DODGE 2WD 2 = Med. Duty DODGE 2WD	03 = CAB CHASSIS WHEEL BASE 3 05 = CAB CHASSIS WHEEL BASE 5 13 = 119 WB 53 = 119 WB 15 = VAN WHEEL BASE 5 55 = WAGON WHEEL BASE 5 17 = VAN WHEEL BASE 7	EG2 = 3.5L V6 Gas Engine EXM = 3.0L V6 Turbo Diesel Engine	DGZ = 5-Speed Auto W5A380 Transmission

AR = use ase required - = Non illustrrated part

<< RETURN TO GROUP INDEX

Front Door Window Regulator & Glass
Figure DVB-120

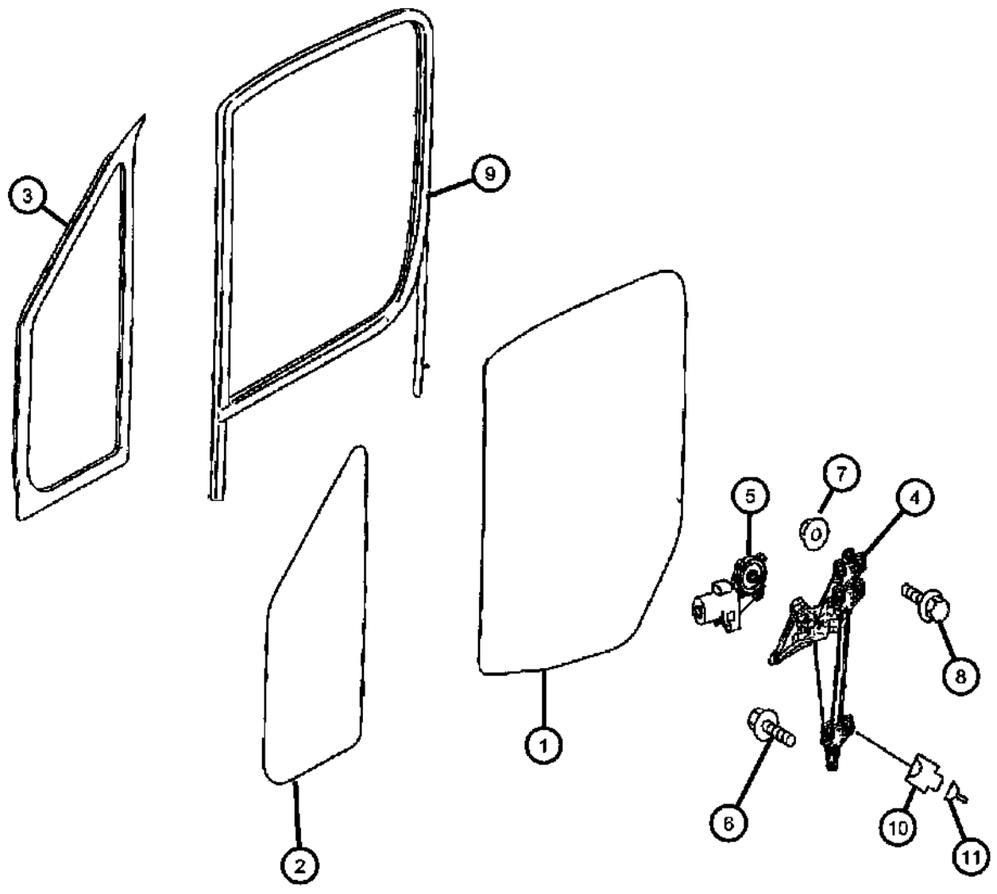

ITEM	PART NUMBER	QTY	LINE	SERIES	BODY	ENGINE	TRANS	TRIM	DESCRIPTION
1									GLASS, Front Door
	68010025AA	1	2, 3, 6, 7	L					Left
	68010109AA	1	2, 3, 6, 7	L					Right
2									GLASS, Front Door Vent
	68010022AA	1	2, 3, 6, 7	L					Left
	68010106AA	1	2, 3, 6, 7	L					Right
3									SEAL, Window Opening
	68010023AA	1	3, 7	L	03, 05				Left
		1	2, 3, 6, 7	L	13, 15, 17, 53, 55				Left
	68010107AA	1	3, 7	L	03, 05				Right
		1	2, 3, 6, 7	L	13, 15, 17, 53, 55				Right
4									REGULATOR, Front Door Window
	68010026AA	1	2, 3, 6, 7	L					Left
	68010110AA	1	2, 3, 6, 7	L					Right
5									MOTOR, Window Regulator, Front Door
	68010028AA	1	3, 7	L	03, 05				Right
		1	2, 3, 6, 7	L	13, 15, 17, 53, 55				Right
	68010029AA	1	3, 7	L	03, 05				Left
		1	2, 3, 6, 7	L	13, 15, 17, 53, 55				Left
6	68010027AA	2	2, 3	L					SCREW, Motor To Window Regulator, Right & Left
7									NUT, Hex
	05097674AA	2	3, 7	L	03, 05				Window Regulator To Door, Right And Left
		2	2, 3, 6, 7	L	13, 15, 17, 53, 55				Window Regulator To Door, Right And Left
8	06104004AA	2	2, 3, 6, 7	L					BOLT, Window Regulator To Door
9									FRAME, Door Glass
	68010030AA	1	2, 3, 6, 7	L					Left
	68010111AA	1	2, 3, 6, 7	L					Right

SPRINTER (VB)

SERIES	LINE	BODY	ENGINE	TRANSMISSION
L = LOWLINE	3 = HD DODGE 2WD 2 = Med. Duty DODGE 2WD	03 = CAB CHASSIS WHEEL BASE 3 05 = CAB CHASSIS WHEEL BASE 5 13 = 119 WB 53 = 119 WB 15 = VAN WHEEL BASE 5 55 = WAGON WHEEL BASE 5 17 = VAN WHEEL BASE 7	EG2 = 3.5L V6 Gas Engine EXM = 3.0L V6 Turbo Diesel Engine	DGZ = 5-Speed Auto W5A380 Transmission

AR = use ase required - = Non illustrrated part

<< RETURN TO GROUP INDEX

Front Door Window Regulator & Glass
Figure DVB-120

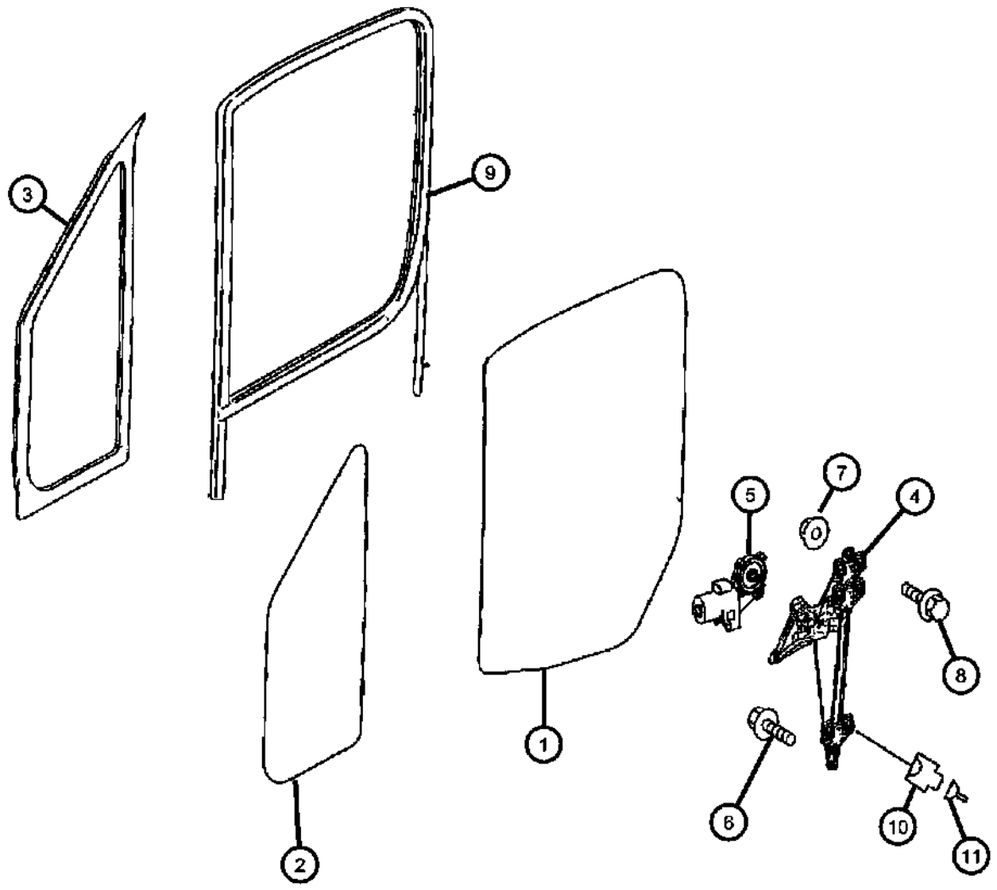

ITEM	PART NUMBER	QTY	LINE	SERIES	BODY	ENGINE	TRANS	TRIM	DESCRIPTION
10	68011302AA	1	2, 3, 6, 7	L					CONNECTOR, [2 Pin; M10/1], Right & Left
11	05133370AA	2	2, 3, 6, 7	L					TERMINAL, [1.5 - 2.5 MM2; JPT; M10/1]

SPRINTER (VB)

SERIES	LINE	BODY	ENGINE	TRANSMISSION
L = LOWLINE	3 = HD DODGE 2WD 2 = Med. Duty DODGE 2WD	03 = CAB CHASSIS WHEEL BASE 3 05 = CAB CHASSIS WHEEL BASE 5 13 = 119 WB 53 = 119 WB 15 = VAN WHEEL BASE 5 55 = WAGON WHEEL BASE 5 17 = VAN WHEEL BASE 7	EG2 = 3.5L V6 Gas Engine EXM = 3.0L V6 Turbo Diesel Engine	DGZ = 5-Speed Auto W5A380 Transmission

AR = use ase required - = Non illustrrated part

Door Handle & Lock Set
Figure DVB-130

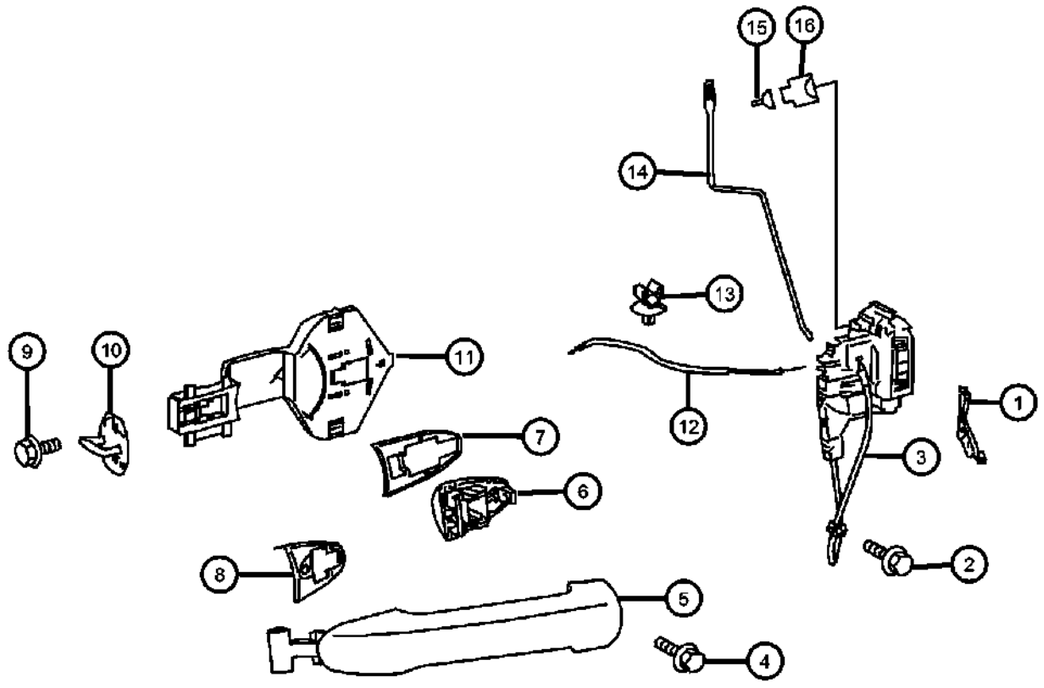

ITEM	PART NUMBER	QTY	LINE	SERIES	BODY	ENGINE	TRANS	TRIM	DESCRIPTION
1	68010017AA	1	2, 3, 6, 7	L	13, 15, 17, 53, 55				COVER, Lock Housing
2									SCREW, M6x16
	05101576AA	3	2, 3, 6, 7	L	13, 15, 17, 53, 55				M6x14
		3	3, 7	L	03, 05				M6x14
3									LATCH, Front Door
	68017889AA	1	2, 3, 6, 7	L					Left
	68017891AA	1	2, 3, 6, 7	L					Right
4									SCREW
	06104136AA	1	3, 7	L	03, 05				M5x16
		1	2, 3, 6, 7	L	13, 15, 17, 53, 55				M5x16
5	68010005AA	2	2, 3, 6, 7	L					HANDLE, Front Door
6									COVER
	68010099AA	1	3, 7	L	03, 05				
		1	2, 3, 6, 7	L	13, 15, 17, 53, 55				
7	68010009AA	1	2, 3, 6, 7	L					PADRear Left
8	68010008AA	1	2, 3, 6, 7	L					PADFront Left
9									SCREW
	05103715AA	2	2, 3, 6, 7	L	13, 15, 17, 53, 55				Locking Eye to Body M21-8.8
		2	3, 7	L	03, 05				Locking Eye to Body M21-8.8
10	68006469AA	1	2, 3, 6, 7	L					LATCH, Door, Right & Left
11									BRACKET, Door Handle
	68010006AA	1	2, 3, 6, 7	L					Right Door
	68010007AA	1	2, 3, 6, 7	L					Left Door
12									CABLE
	68010018AA	1	2, 3, 6, 7	L					Left Door
	68010104AA	1	2, 3, 6, 7	L					Right Door
13	68009854AA	1	2, 3, 6, 7	L					RETAINER
14									KNOB AND LINK, Door Latch
	68010015AA	1	2, 3, 6, 7	L					Left Door
	68010103AA	1	2, 3, 6, 7	L					Right Door

SPRINTER (VB)

SERIES	LINE	BODY	ENGINE	TRANSMISSION
L = LOWLINE	3 = HD DODGE 2WD 2 = Med. Duty DODGE 2WD	03 = CAB CHASSIS WHEEL BASE 3 05 = CAB CHASSIS WHEEL BASE 5 13 = 119 WB 53 = 119 WB 15 = VAN WHEEL BASE 5 55 = WAGON WHEEL BASE 5 17 = VAN WHEEL BASE 7	EG2 = 3.5L V6 Gas Engine EXM = 3.0L V6 Turbo Diesel Engine	DGZ = 5-Speed Auto W5A380 Transmission

Door Handle & Lock Set
Figure DVB-130

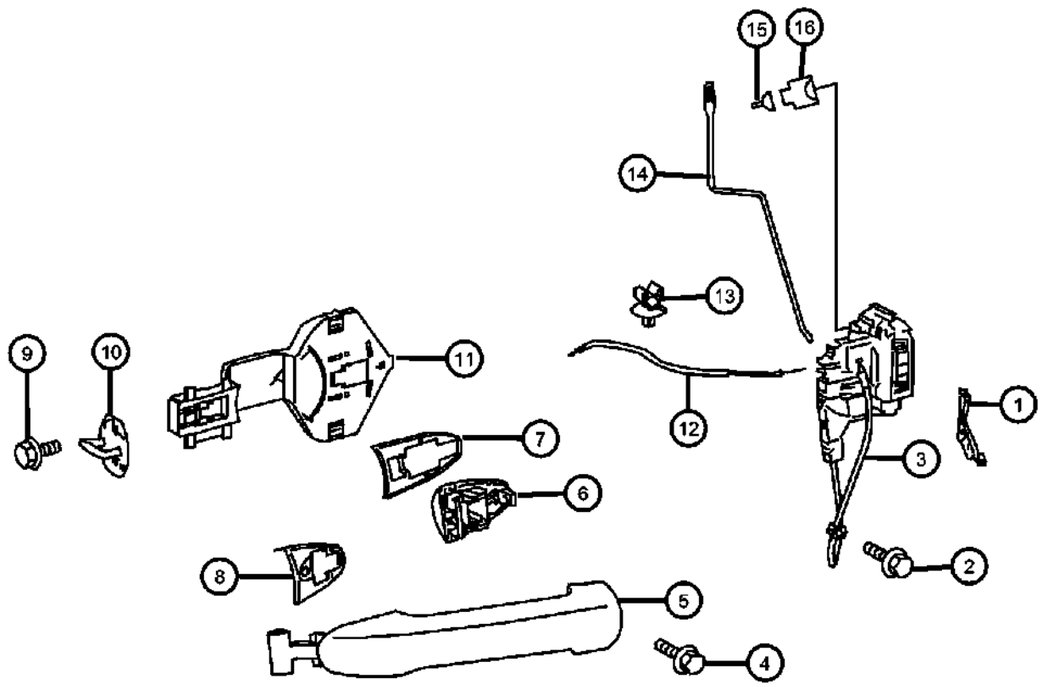

ITEM	PART NUMBER	QTY	LINE	SERIES	BODY	ENGINE	TRANS	TRIM	DESCRIPTION
15	05161599AA	99	2, 3, 6, 7	L					SEAL, Wiring, M14/6
16	68011245AA	1	2, 3, 6, 7	L					CONNECTOR, 4-Pin,M14/6

SPRINTER (VB)

SERIES	LINE	BODY	ENGINE	TRANSMISSION
L = LOWLINE	3 = HD DODGE 2WD 2 = Med. Duty DODGE 2WD	03 = CAB CHASSIS WHEEL BASE 3 05 = CAB CHASSIS WHEEL BASE 5 13 = 119 WB 53 = 119 WB 15 = VAN WHEEL BASE 5 55 = WAGON WHEEL BASE 5 17 = VAN WHEEL BASE 7	EG2 = 3.5L V6 Gas Engine EXM = 3.0L V6 Turbo Diesel Engine	DGZ = 5-Speed Auto W5A380 Transmission

Door Panelling
Figure DVB-140

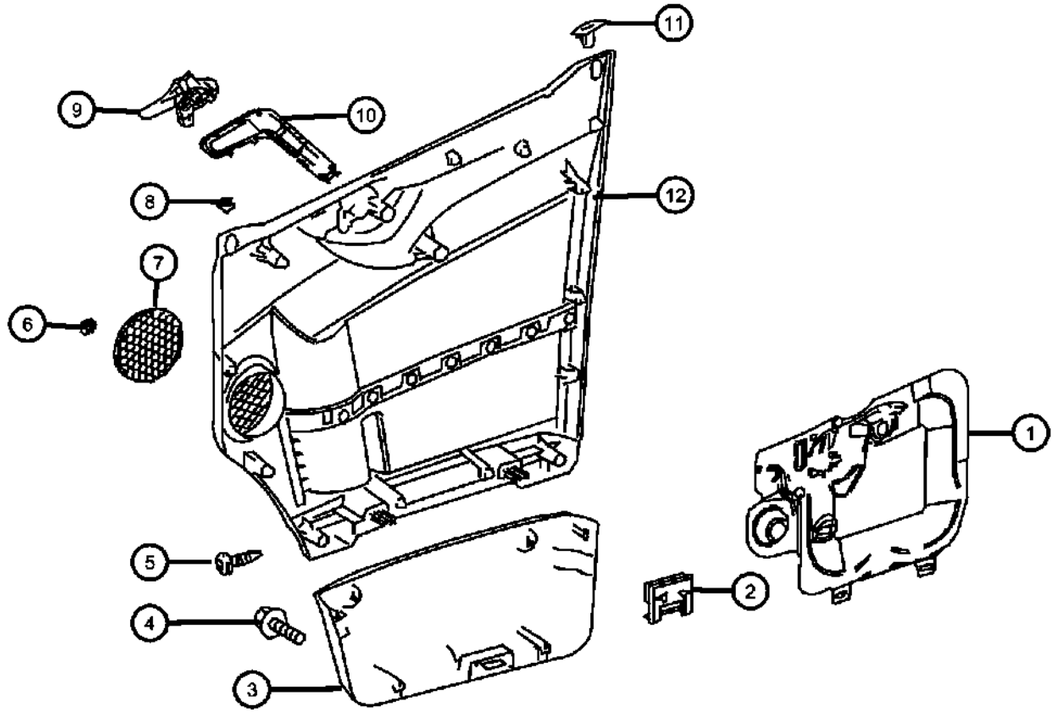

ITEM	PART NUMBER	QTY	LINE	SERIES	BODY	ENGINE	TRANS	TRIM	DESCRIPTION
1									SHIELD, Door
	68010044AA	1	2, 3, 6, 7	L					Right
	68010045AA	1	2, 3, 6, 7	L					Left
2									BEZEL, Door Trim Panel
	05123763AA	2	2, 3, 6, 7	L	13, 15, 17, 53, 55				
		2	3, 7	L	03, 05				
3									PANEL, Front Door Trim
	1HE39XDVAA	1	2, 3, 6, 7	L					Left
	1HE40XDVAA	1	2, 3, 6, 7	L					Right
4									SCREW
	06104140AA	2	3, 7	L	03, 05				Panelling Mounting M6x16, Right & Left
		2	2, 3, 6, 7	L	13, 15, 17, 53, 55				Panelling Mounting M6x16, Right & Left
5									SCREW
	06104666AA	8	2, 3, 6, 7	L	13, 15, 17, 53, 55				M5x14
		8	3, 7	L	03, 05				M5x14
6	1HH69XDVAA	2	2, 3, 6, 7	L					COVER, Door Panelling, Right & Left
7	1HE42XDVAA	2	2, 3, 6, 7	L					GRILLE, Speaker
8	68006484AA	11	2, 3, 6, 7	L					RETAINER
9									HANDLE, Inside Release
	1HE51XDVAA	1	2, 3, 6, 7	L					Left
	1HE52XDVAA	1	2, 3, 6, 7	L					Right
10									COVER
	68010036AA	1	2, 3, 6, 7	L					Handle, Left
	68010115AA	1	2, 3, 6, 7	L					Handle, Right
11									BEZEL, Lock Knob
	1HE43XDVAA	1	2, 3, 6, 7	L					Right
	1HE44XDVAA	1	2, 3, 6, 7	L					Left
12									PANEL, Front Door
	1HE36XDVAA	1	2, 3, 6, 7	L					Left Door
	1HE37XDVAA	1	2, 3, 6, 7	L					Right Door

SPRINTER (VB)

SERIES	LINE	BODY	ENGINE	TRANSMISSION
L = LOWLINE	3 = HD DODGE 2WD 2 = Med. Duty DODGE 2WD	03 = CAB CHASSIS WHEEL BASE 3 05 = CAB CHASSIS WHEEL BASE 5 13 = 119 WB 53 = 119 WB 15 = VAN WHEEL BASE 5 55 = WAGON WHEEL BASE 5 17 = VAN WHEEL BASE 7	EG2 = 3.5L V6 Gas Engine EXM = 3.0L V6 Turbo Diesel Engine	DGZ = 5-Speed Auto W5A380 Transmission

Sliding Door
Figure DVB-305

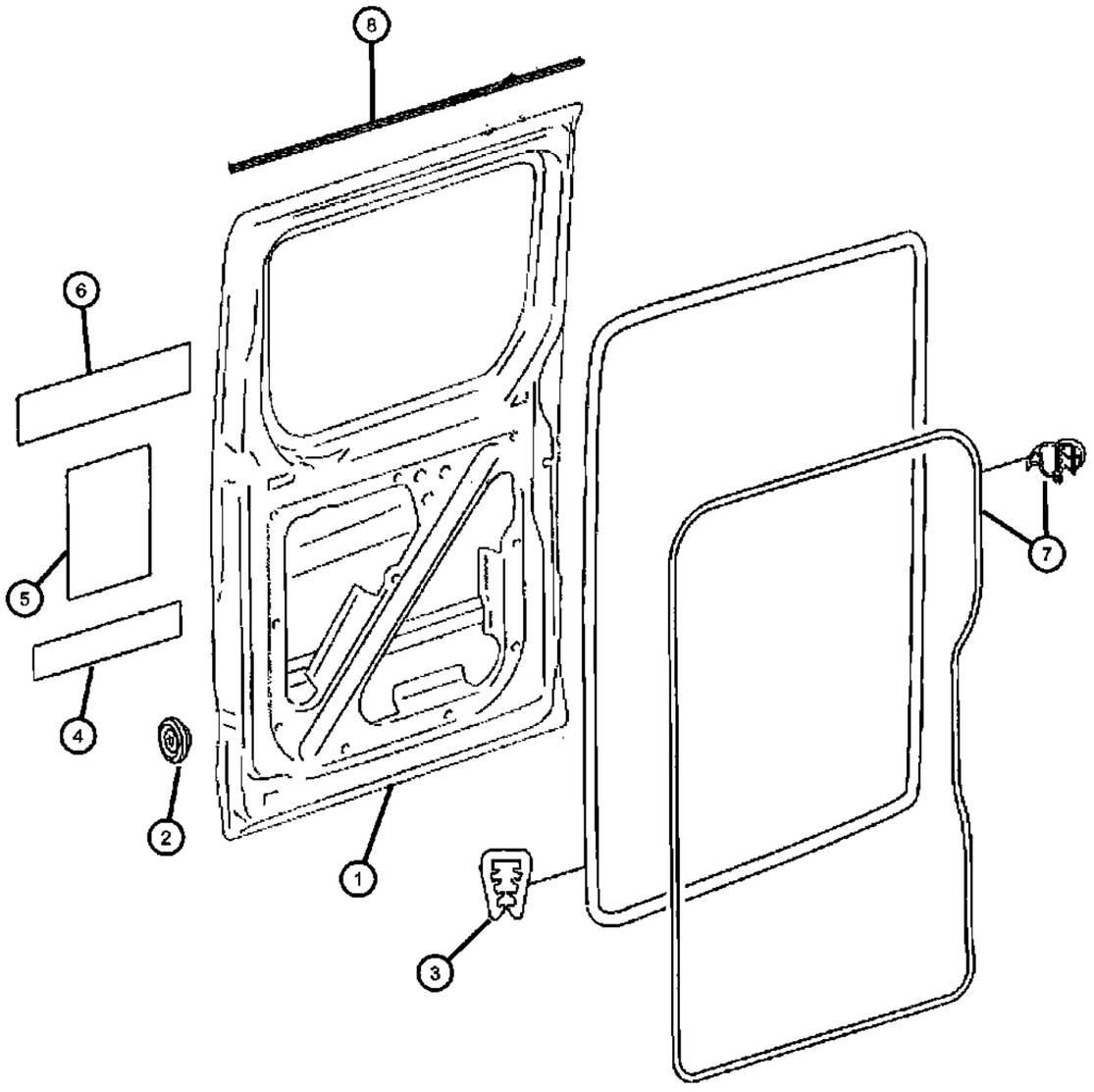

ITEM	PART NUMBER	QTY	LINE	SERIES	BODY	ENGINE	TRANS	TRIM	DESCRIPTION
1									DOOR, Side Cargo
	68010123AA	1	2, 3, 6, 7	L	13, 15, 17, 53, 55				Without Window, High Roof, Right
	68010124AA	1	2, 3, 6, 7	L	13, 15, 17, 53, 55				With Window, High Roof, Right
	68010125AA	1	2, 3, 6, 7	L	13, 15, 17, 53, 55				With Window, Right
	68010126AA	1	2, 3, 6, 7	L	13, 15, 17, 53, 55				Without Window, Right
	68017330AA	1	2, 3, 6, 7	L	13, 15, 17, 53, 55				Without Window, High Roof, Left
	68017331AA	1	2, 3, 6, 7	L	13, 15, 17, 53, 55				With Window, High Roof, Left
	68017332AA	1	2, 3, 6, 7	L	13, 15, 17, 53, 55				With Window, Left
	68017333AA	1	2, 3, 6, 7	L	13, 15, 17, 53, 55				Without Window, Left
2									PLUG, Access Hole, 15 mm
	68006360AA	1	3, 7	L	03, 05				
		1	2, 3, 6, 7	L	13, 15, 17, 53, 55				
3	04862639AA	1	2, 3, 6, 7	L	13, 15, 17, 53, 55				WEATHERSTRIP, Cargo Door
4	68006518AA	1	2, 3, 6, 7	L	13, 15, 17, 53, 55				INSULATION
5	68010358AA	1	2, 3, 6, 7	L	13, 15, 17, 53, 55				INSULATION
6									INSULATION
	68006519AA	1	2, 3, 6, 7	L	13, 15, 17, 53, 55				
		1	3, 7	L	03, 05				
7									WEATHERSTRIP, Cargo Door
	68014676AA	1	2, 3, 6, 7	L	13, 15, 17, 53, 55				With High Roof, Left
	68014678AA	1	2, 3, 6, 7	L	13, 15, 17				With Low Roof, Left
	68014684AA	1	2, 3, 6, 7	L	13, 15, 17				With High Roof, Right
	68014687AA	1	2, 3, 6, 7	L	13, 15, 17, 53, 55				With Low Roof, Right
	68014696AA	1	2, 3, 6, 7	L	13, 15, 17, 53, 55				With Cargo Partition, Right & Left
8	68014700AA	1	2, 3, 6, 7	L	13, 15, 17, 53, 55				WEATHERSTRIP, Cargo Door

SPRINTER (VB)

SERIES	LINE	BODY	ENGINE	TRANSMISSION
L = LOWLINE	3 = HD DODGE 2WD 2 = Med. Duty DODGE 2WD	03 = CAB CHASSIS WHEEL BASE 3 05 = CAB CHASSIS WHEEL BASE 5 13 = 119 WB 53 = 119 WB 15 = VAN WHEEL BASE 5 55 = WAGON WHEEL BASE 5 17 = VAN WHEEL BASE 7	EG2 = 3.5L V6 Gas Engine EXM = 3.0L V6 Turbo Diesel Engine	DGZ = 5-Speed Auto W5A380 Transmission

Door Drive Mechanism
Figure DVB-310

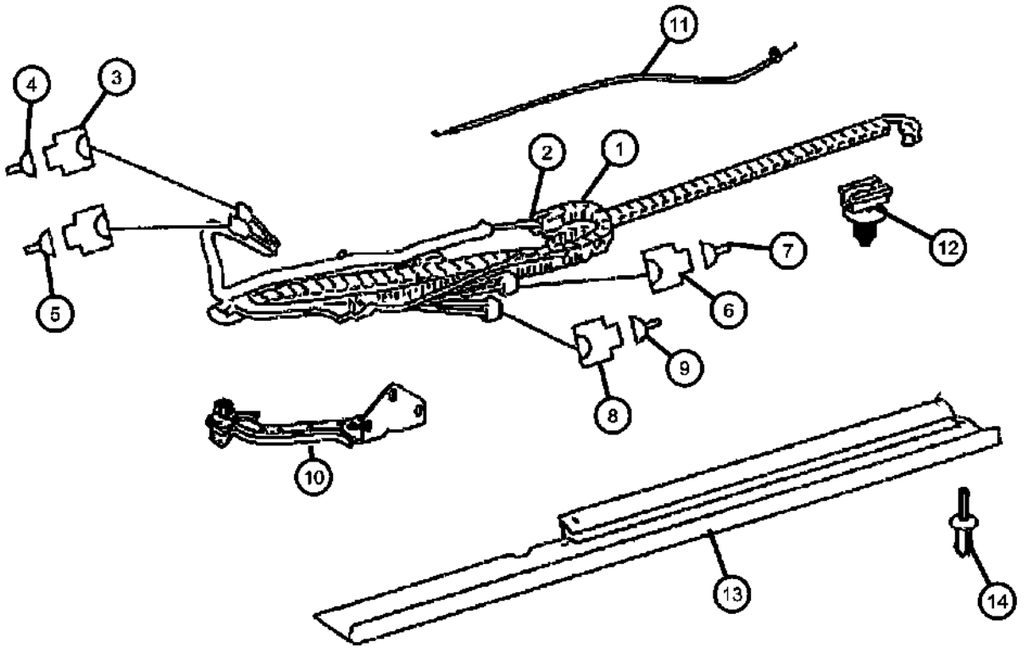

ITEM	PART NUMBER	QTY	LINE	SERIES	BODY	ENGINE	TRANS	TRIM	DESCRIPTION
1	68010307AA	1	2, 3, 6, 7	L	13, 15, 17, 53, 55				WIRE TRACK, Sliding Door Left
2									WIRE TRACK, Sliding Door Right
	68010306AA	1	2, 3, 6, 7	L	13, 15, 17, 53, 55				With [RC5]
	68010312AA	1	2, 3, 6, 7	L	13, 15, 17, 53, 55				With [GKA]
3	68011362AA	1	7, 2, 3, 6	L					CONNECTOR
4	68016714AA	1	2, 3, 6, 7	L					TERMINAL
5									TERMINAL, Male
	05133990AA	99	3, 7	L	03, 05				
		99	2, 3, 6, 7	L	13, 15, 17, 53, 55				
6									CONNECTOR
	68011254AA	1	2, 3, 6, 7	L	13, 15, 17				
		1	2, 3, 6, 7	L	03, 05, 53, 55				
7									TERMINAL
	05133945AA	AR	2, 3, 6, 7	L	13, 15, 17, 53, 55				
		AR	3, 7	L	03, 05				
8									INSULATOR, 6 Way
	05120260AA	1	2, 3, 6, 7	L	13, 15, 17, 53, 55				
		1	3, 7	L	03, 05				
9	05103873AA	3	2, 3, 6, 7	L	13, 15, 17, 53, 55				TERMINAL
10									SLIDER, Body Hardware
	68010303AA	1	2, 3, 6, 7	L	13, 15, 17, 53, 55				Right
	68017385AA	1	2, 3, 6, 7	L	13, 15, 17, 53, 55				Left
11									CABLE
	68010302AA	1	2, 3, 6, 7	L	13, 15, 17, 53, 55				Right
	68017384AA	1	2, 3, 6, 7	L	13, 15, 17, 53, 55				Left
12									CLIP, Retainer
	68013413AA	1	3, 7	L	03, 05				

SPRINTER (VB)

SERIES	LINE	BODY	ENGINE	TRANSMISSION
L = LOWLINE	3 = HD DODGE 2WD 2 = Med. Duty DODGE 2WD	03 = CAB CHASSIS WHEEL BASE 3 05 = CAB CHASSIS WHEEL BASE 5 13 = 119 WB 53 = 119 WB 15 = VAN WHEEL BASE 5 55 = WAGON WHEEL BASE 5 17 = VAN WHEEL BASE 7	EG2 = 3.5L V6 Gas Engine EXM = 3.0L V6 Turbo Diesel Engine	DGZ = 5-Speed Auto W5A380 Transmission

Door Drive Mechanism
Figure DVB-310

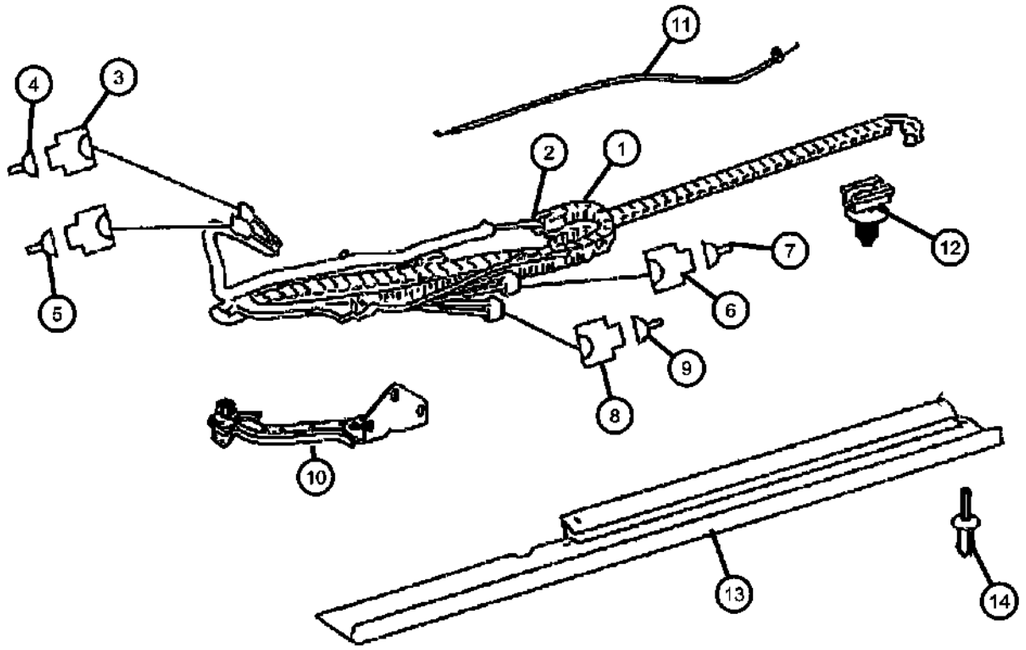

ITEM	PART NUMBER	QTY	LINE	SERIES	BODY	ENGINE	TRANS	TRIM	DESCRIPTION
		1	2, 3, 6, 7	L	13, 15, 17, 53, 55				
13									FOIL, Insulator
	68017387AA	1	2, 3, 6, 7	L	13, 15, 17, 53, 55				Without [CWC],[XJW],[XJ1] or [GEX]
	68017386AA	1	2, 3, 6, 7	L	13, 15, 17, 53, 55				
14	06104903AA	1	2, 3, 6, 7	L	13, 15, 17, 53, 55				RIVET

SPRINTER (VB)

SERIES	LINE	BODY	ENGINE	TRANSMISSION
L = LOWLINE	3 = HD DODGE 2WD 2 = Med. Duty DODGE 2WD	03 = CAB CHASSIS WHEEL BASE 3 05 = CAB CHASSIS WHEEL BASE 5 13 = 119 WB 53 = 119 WB 15 = VAN WHEEL BASE 5 55 = WAGON WHEEL BASE 5 17 = VAN WHEEL BASE 7	EG2 = 3.5L V6 Gas Engine EXM = 3.0L V6 Turbo Diesel Engine	DGZ = 5-Speed Auto W5A380 Transmission

Sliding Door Rail and Suspension
Figure DVB-320

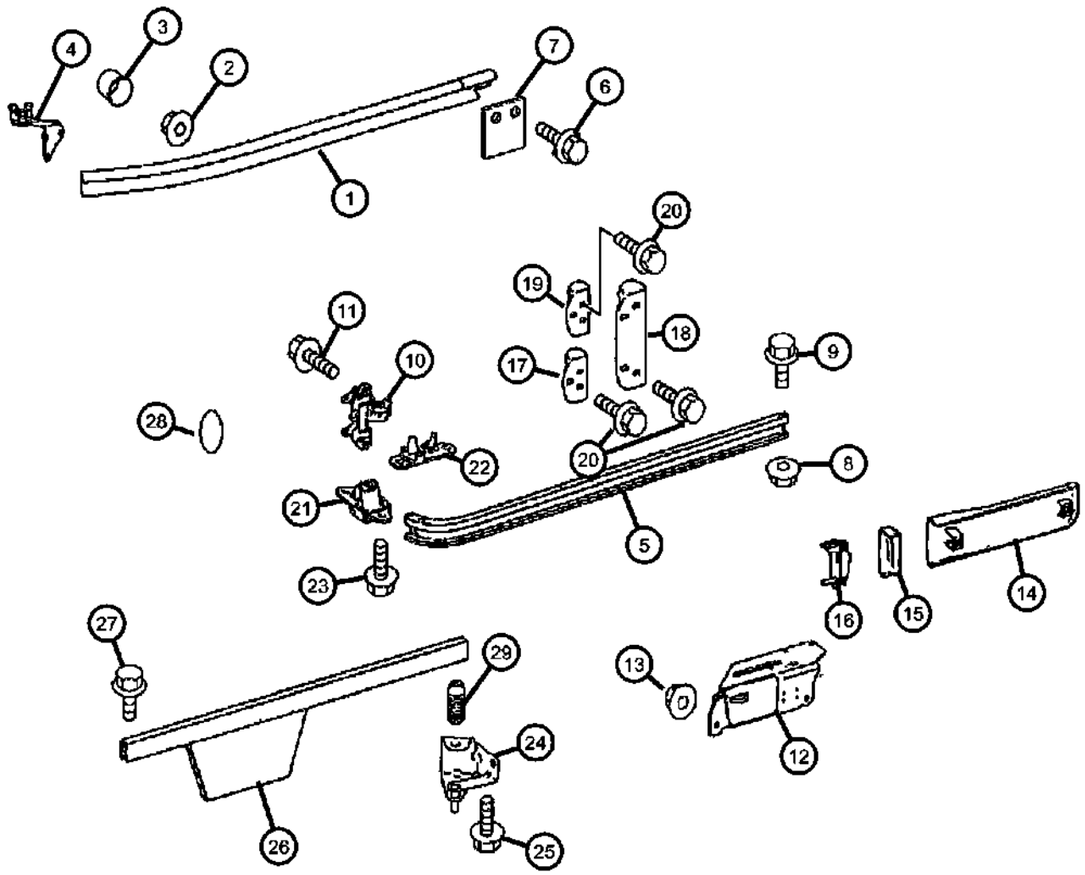

ITEM	PART NUMBER	QTY	LINE	SERIES	BODY	ENGINE	TRANS	TRIM	DESCRIPTION
1									RAIL, Slider Door
	68010186AA	1	2, 3, 6, 7	L	13, 15, 17, 53, 55				Upper With [GXQ] Two Stage Sliding Door, Right
	68010187AA	1	2, 3, 6, 7	L	13, 15, 17, 53, 55				Upper With [GXQ] Two Stage Sliding Door, Left
	68010188AA	1	2, 3, 6, 7	L	13, 15, 17, 53, 55				Upper Without [GXQ] Two Stage Sliding Door, Right
	68010189AA	1	2, 3, 6, 7	L	13, 15, 17, 53, 55				Upper Without [GXQ] Two Stage Sliding Door, Left
2	68010192AA	8	2, 3, 6, 7	L	13, 15, 17, 53, 55				NUT
3	05126256AA	2	2, 3, 6, 7	L	13, 15, 17, 53, 55				CAP
4									SLIDER, Body Hardware
	68010193AA	1	2, 3, 6, 7	L	13, 15, 17, 53, 55				Right
	68017366AA	1	2, 3, 6, 7	L	13, 15, 17, 53, 55				Left
5									RAIL, Slider Door
	68018802AA	1	2, 3, 6, 7	L	13, 15, 17, 53, 55				Right
	68018803AA	1	2, 3, 6, 7	L	13, 15, 17, 53, 55				Left
6	68010198AA	1	2, 3, 6, 7	L	13, 15, 17, 53, 55				SCREW
7	68018801AA	1	2, 3, 6, 7	L	13, 15, 17, 53, 55				PAD
8	68010192AA	8	2, 3, 6, 7	L	13, 15, 17, 53, 55				NUT
9	68010198AA	1	2, 3, 6, 7	L	13, 15, 17, 53, 55				SCREW
10									SLIDER, Body Hardware
	68010199AA	1	2, 3, 6, 7	L	13, 15, 17, 53, 55				With [GKA] Right Sliding Door, Right
	68010200AA	1	2, 3, 6, 7	L	13, 15, 17, 53, 55				With [GKA + GKG], Right
	68010201AA	1	2, 3, 6, 7	L	13, 15, 17, 53, 55				With [GKE + GKG], Left
	68017367AA	1	2, 3, 6, 7	L	13, 15, 17, 53, 55				With [GKE] Left Sliding Door, Left
11	06104153AC	4	2, 3, 6, 7	L	13, 15, 17, 53, 55				SCREW
12									BRACKET

SPRINTER (VB)

SERIES	LINE	BODY	ENGINE	TRANSMISSION
L = LOWLINE	3 = HD DODGE 2WD 2 = Med. Duty DODGE 2WD	03 = CAB CHASSIS WHEEL BASE 3 05 = CAB CHASSIS WHEEL BASE 5 13 = 119 WB 53 = 119 WB 15 = VAN WHEEL BASE 5 55 = WAGON WHEEL BASE 5 17 = VAN WHEEL BASE 7	EG2 = 3.5L V6 Gas Engine EXM = 3.0L V6 Turbo Diesel Engine	DGZ = 5-Speed Auto W5A380 Transmission

Sliding Door Rail and Suspension
Figure DVB-320

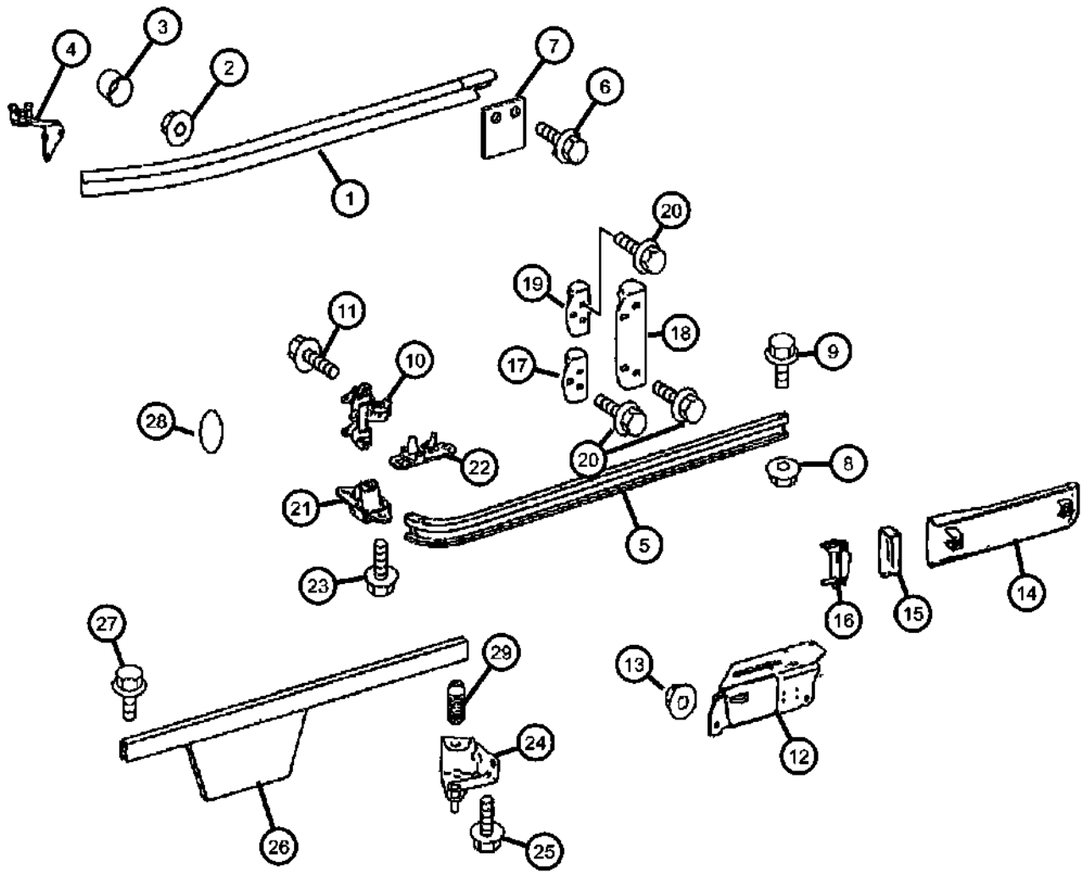

ITEM	PART NUMBER	QTY	LINE	SERIES	BODY	ENGINE	TRANS	TRIM	DESCRIPTION
	68010210AA	1	2, 3, 6, 7	L	13, 15, 17, 53, 55				Right
	68010211AA	1	2, 3, 6, 7	L	13, 15, 17, 53, 55				Left
13									NUT
	68004878AA	2	2, 3, 6, 7	L	13, 15, 17, 53, 55				
		2	3, 7	L	03, 05				
14									COVER
	68018806AA	2	3, 7	L	13, 53				Right
		2	2, 6	L	13, 53				Right
	68018807AA	2	3, 7	L	13, 53				Left
		2	2, 6	L	13, 53				Left
15									COVER
	68018808AA	1	2, 6	L	13, 15, 17, 53, 55				Right
	68018809AA	1	2, 6	L	13, 15, 17, 53, 55				Left
16									CAP
	68018810AA	1	2, 6	L	13, 15, 17, 53, 55				Right
	68018811AA	1	2, 6	L	13, 15, 17, 53, 55				Left
17	68010203AA	1	2, 3, 6, 7	L	13, 15, 17, 53, 55				BUMPER, RubberRight & Left
18	68010204AA	1	2, 3, 6, 7	L	13, 15, 17, 53, 55				BUMPER, RubberRight & Left
19	68010202AA	1	2, 3, 6, 7	L	13, 15, 17, 53, 55				BUMPER, RubberRight & Left
20	06104153AA	3	2, 3, 6, 7	L	13, 15, 17, 53, 55				SCREW
21	68010205AA	2	2, 3, 6, 7	L	13, 15, 17, 53, 55				SLIDER, Body Hardware
22	68010206AA	2	2, 3, 6, 7	L	13, 15, 17, 53, 55				WEDGE, Sliding Door
23									SCREW
	06104142AA	6	2, 3, 6, 7	L	13, 15, 17, 53, 55				
		2	3, 7	L	03, 05				

SPRINTER (VB)

SERIES	LINE	BODY	ENGINE	TRANSMISSION
L = LOWLINE	3 = HD DODGE 2WD 2 = Med. Duty DODGE 2WD	03 = CAB CHASSIS WHEEL BASE 3 05 = CAB CHASSIS WHEEL BASE 5 13 = 119 WB 53 = 119 WB 15 = VAN WHEEL BASE 5 55 = WAGON WHEEL BASE 5 17 = VAN WHEEL BASE 7	EG2 = 3.5L V6 Gas Engine EXM = 3.0L V6 Turbo Diesel Engine	DGZ = 5-Speed Auto W5A380 Transmission

Sliding Door Rail and Suspension
Figure DVB-320

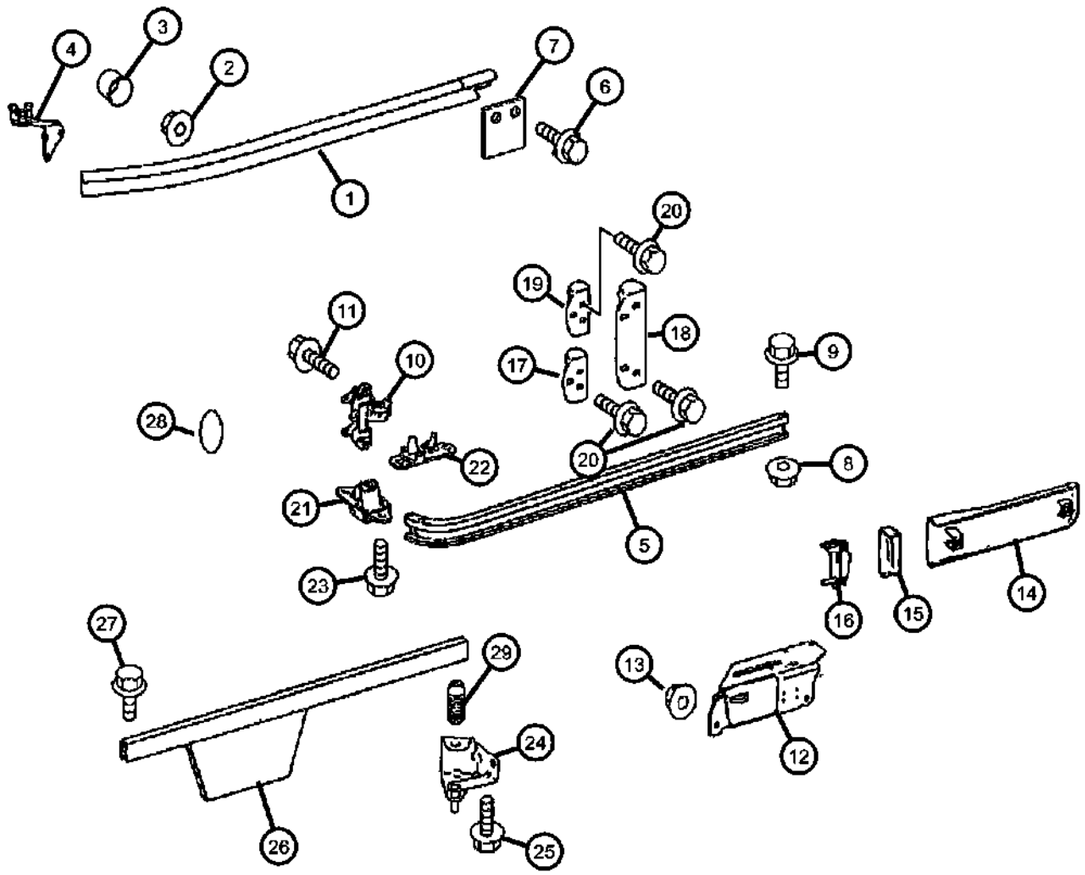

ITEM	PART NUMBER	QTY	LINE	SERIES	BODY	ENGINE	TRANS	TRIM	DESCRIPTION
24	68010207AA	1	2, 3, 6, 7	L	13, 15, 17, 53, 55				BRACKETRight
25	06104152AA	2	2, 3, 6, 7	L	13, 15, 17, 53, 55				SCREW
26									REINFORCEMENT
	68010209AA	1	2, 3, 6, 7	L	13, 15, 17, 53, 55				Right
	68017369AA	1	2, 3, 6, 7	L	13, 15, 17, 53, 55				Left
27									SCREW
	06104129AA	3	3, 7	L	03, 05				
		3	2, 3, 6, 7	L	13, 15, 17, 53, 55				
28									FOIL, Insulator
	05099253AA	1	3, 7	L	03, 05				
		1	2, 3, 6, 7	L	13, 15, 17, 53, 55				
29	68010208AA	2	2, 3, 6, 7	L	13, 15, 17, 53, 55				BUMPER, Rubber

SPRINTER (VB)

SERIES	LINE	BODY	ENGINE	TRANSMISSION
L = LOWLINE	3 = HD DODGE 2WD 2 = Med. Duty DODGE 2WD	03 = CAB CHASSIS WHEEL BASE 3 05 = CAB CHASSIS WHEEL BASE 5 13 = 119 WB 53 = 119 WB 15 = VAN WHEEL BASE 5 55 = WAGON WHEEL BASE 5 17 = VAN WHEEL BASE 7	EG2 = 3.5L V6 Gas Engine EXM = 3.0L V6 Turbo Diesel Engine	DGZ = 5-Speed Auto W5A380 Transmission

Sliding Door, Inside Handle and Locking System
Figure DVB-330

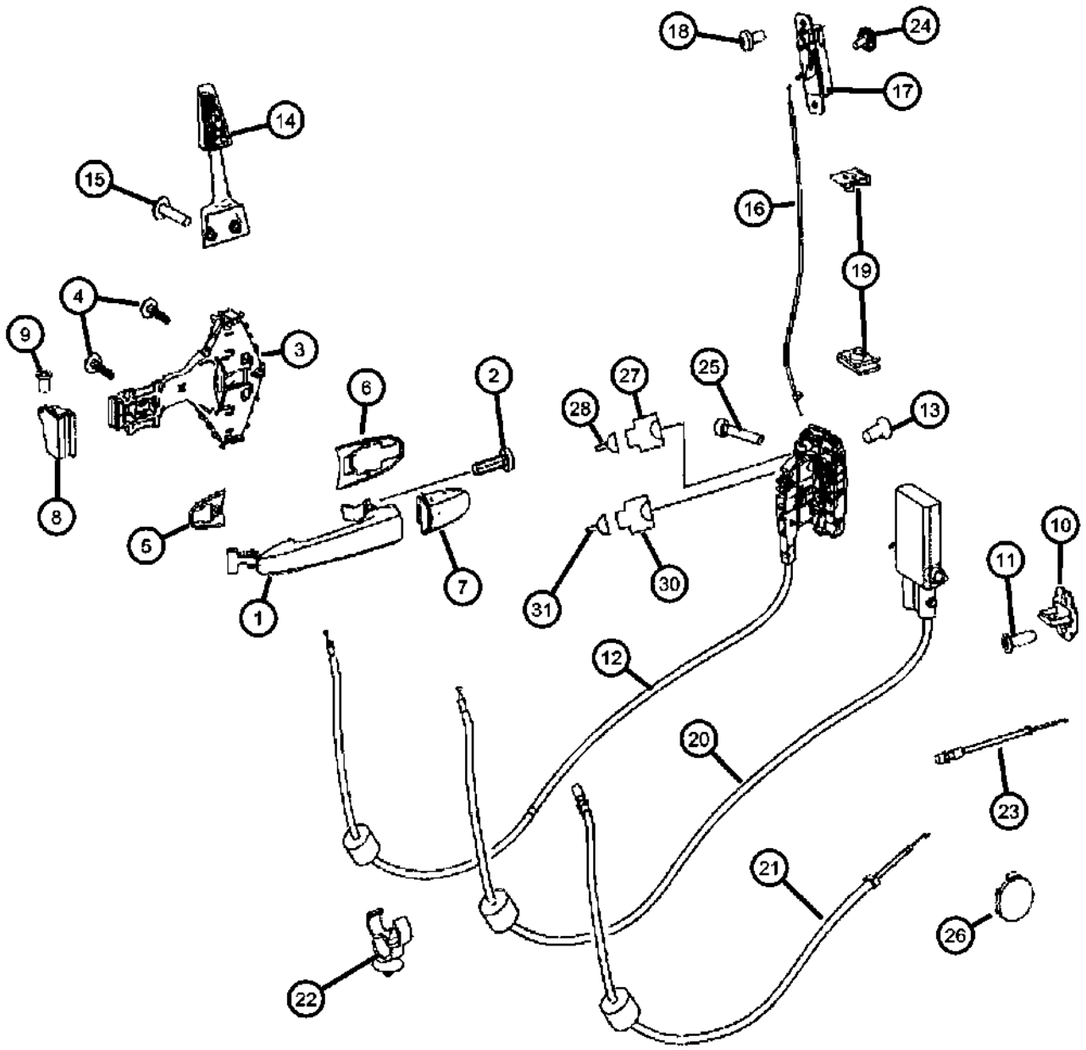

ITEM	PART NUMBER	QTY	LINE	SERIES	BODY	ENGINE	TRANS	TRIM	DESCRIPTION
1	68006564AA	1	2, 3, 6, 7	L	13, 15, 17, 53, 55				HANDLE, Front And Sliding DoorRight & Left
2	06104136AA	1	2, 3, 6, 7	L	13, 15, 17, 53, 55				SCREW
3									BRACKET, Door Handle
	68010226AA	1	2, 3, 6, 7	L	13, 15, 17, 53, 55				Right
	68010227AA	1	2, 3	L	13, 15, 17, 53, 55				Left
4	68010227AA	1							SCREW, (NOT SERVICED)
5	68010008AA	1	6, 7, 2, 3	L	13, 15, 17, 53, 55				PADFront, Right & Left
6	68010009AA	1	2, 3, 6, 7	L					PADRear, Right & Left
7	68010228AA	1	2, 3, 6, 7	L	13, 15, 17, 53, 55				CAP, Door Lock CylinderRight & Left
8									COVER
	68010230AA	1	2, 3, 6, 7	L	13, 15, 17, 53, 55				Right
	68010231AA	1	2, 3	L	13, 15, 17, 53, 55				Left
9	68010229AA	1	2, 3, 6, 7	L	13, 15, 17, 53, 55				BUSHINGRight & Left
10	68010232AA	1	2, 3, 6, 7	L	13, 15, 17, 53, 55				STRIKER, Door LatchRight & Left
11	05103715AA	2	2, 3, 6, 7	L	13, 15, 17, 53, 55				SCREW
12									LOCK, Side Cargo Door
	68017876AA	1	2, 3, 6, 7	L					Right
	68017877AA	1	2, 3, 6, 7	L					Left
13	05101576AA	3	2, 3, 6, 7	L	13, 15, 17, 53, 55				SCREW, M6x16
14									HANDLE, Sliding Door Assist
	1MS989B2AA	1	2, 3, 6, 7	L					Left
	1MS999B2AA	1	2, 3, 6, 7	L					Right
15	06104123AA	3	2, 3, 6, 7	L	13, 15, 17, 53, 55				BOLT AND WASHER, 6 Lobe Recessed, M6X1.00X25.00
16									CABLE
	68010235AA	1	2, 3, 6, 7	L	13, 15, 17, 53, 55				Left
	68010237AA	1	3, 6, 7, 2	L	13, 15, 17, 53, 55				Right

SPRINTER (VB)

SERIES	LINE	BODY	ENGINE	TRANSMISSION
L = LOWLINE	3 = HD DODGE 2WD 2 = Med. Duty DODGE 2WD	03 = CAB CHASSIS WHEEL BASE 3 05 = CAB CHASSIS WHEEL BASE 5 13 = 119 WB 53 = 119 WB 15 = VAN WHEEL BASE 5 55 = WAGON WHEEL BASE 5 17 = VAN WHEEL BASE 7	EG2 = 3.5L V6 Gas Engine EXM = 3.0L V6 Turbo Diesel Engine	DGZ = 5-Speed Auto W5A380 Transmission

Sliding Door, Inside Handle and Locking System
Figure DVB-330

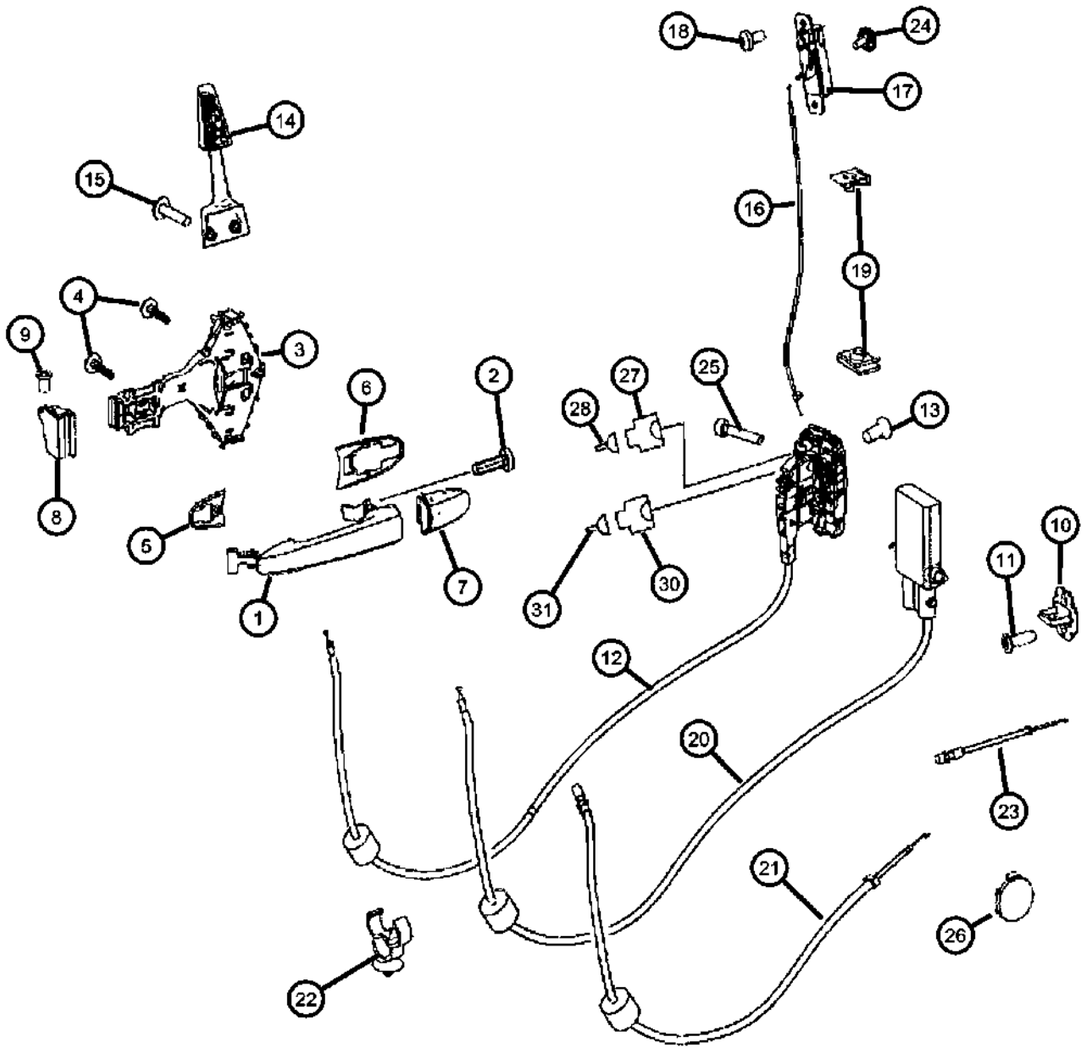

ITEM	PART NUMBER	QTY	LINE	SERIES	BODY	ENGINE	TRANS	TRIM	DESCRIPTION
17									LOCK, Side Cargo Door
	68010224AA	1	2, 3, 6, 7	L	13, 15, 17, 53, 55				Right Door, Top
	68010225AA	1	2, 3, 6, 7	L	13, 15, 17, 53, 55				Left Door, Top
18	06104141AA	2	2, 3, 6, 7	L	13, 15, 17, 53, 55				SCREW
19	68010238AA	2	2, 3, 6, 7	L	13, 15, 17, 53, 55				CLIP
20	68010239AA	1	2, 3, 6, 7	L	13, 15, 17, 53, 55				CABLE
21	68010240AA	1	2, 3, 6, 7	L	13, 15, 17, 53, 55				CABLE, Catch
22									RETAINER
	68010241AA	3	2, 3, 6, 7	L					Line Holder Cable / Could Also Use [68020509AA]
	68020509AA	1	2, 3, 6, 7	L	13, 15, 17, 53, 55				Line Holder Cable/ Could Also Use [68010241AA]
23	68010242AA	1	2, 3, 6, 7	L	13, 15, 17, 53, 55				KNOB AND LINK, Door Latch
24	68010246AA	1	2, 3, 6, 7	L	13, 15, 17, 53, 55				BRACKET, Screw
25	68000329AA	1	2, 3, 6, 7	L	13, 15, 17, 53, 55				SCREW
26	1HQ519B2AA	3	2, 3, 6, 7	L	13, 15, 17, 53, 55				COVER
27	68011434AA	1	2, 3, 6, 7	L					CONNECTOR, Central Locking Sliding Door / [8 Pin MLK 1.2; M14/28]
28	68011878AA	AR	6, 7, 2, 3	L					TERMINAL, [0.22 - 0.5 MM2 MLK1.2; M14/28]
-29									GASKET
	05138031AA	1	2, 3, 6, 7	L					[M14/27]
	68011050AA	AR	2, 3, 6, 7	L					Seal [M14/27]
30	68011050AA	AR							CONNECTOR, 68011242AA, (NOT SERVICED),
31	05103874AA	1	2, 3, 6, 7	L					TERMINAL, [0.75 MM2 MQS; M14/27]

SPRINTER (VB)

SERIES	LINE	BODY	ENGINE	TRANSMISSION
L = LOWLINE	3 = HD DODGE 2WD 2 = Med. Duty DODGE 2WD	03 = CAB CHASSIS WHEEL BASE 3 05 = CAB CHASSIS WHEEL BASE 5 13 = 119 WB 53 = 119 WB 15 = VAN WHEEL BASE 5 55 = WAGON WHEEL BASE 5 17 = VAN WHEEL BASE 7	EG2 = 3.5L V6 Gas Engine EXM = 3.0L V6 Turbo Diesel Engine	DGZ = 5-Speed Auto W5A380 Transmission

AR = use ase required - = Non illustrrated part

<< RETURN TO GROUP INDEX

Rear Door Panel
Figure DVB-410

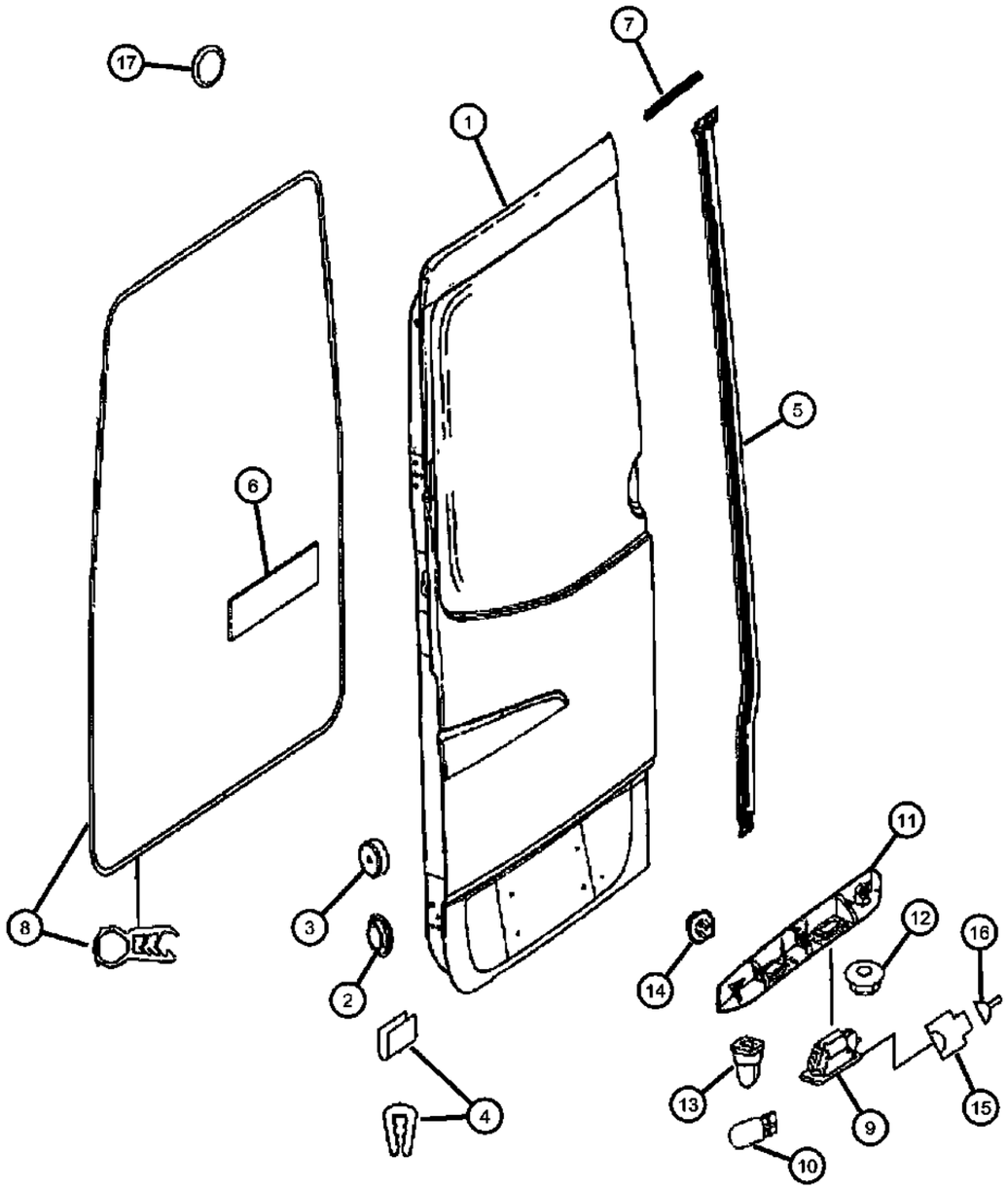

ITEM	PART NUMBER	QTY	LINE	SERIES	BODY	ENGINE	TRANS	TRIM	DESCRIPTION
1									DOOR, Rear Cargo
	68006384AA	1	2, 3, 6, 7	L	13, 15, 17, 53, 55				Without Window, With High Roof, Left
	68006386AA	1	2, 3, 6, 7	L	13, 15, 17, 53, 55				With Window, Left
	68006388AA	1	2, 3, 6, 7	L	13, 15, 17, 53, 55				Without Window, Left
	68006523AA	1	2, 3, 6, 7	L	13, 15, 17, 53, 55				With Window, With High Roof, Right
	68006525AA	1	2, 3, 6, 7	L	13, 15, 55, 17, 53				Without Window, With High Roof, Right
	68006382AA	1	2, 3, 6, 7	L	13, 15, 17, 53, 55				With Window, With High Roof, Left
	68006527AA	1	2, 3, 6, 7	L	13, 15, 17, 53, 55				With Window, Right
	68006529AA	1	2, 3, 6, 7	L	13, 15, 17, 53, 55				Without Window, Right
2									PLUG, Body
	68006359AA	1	2, 3, 6, 7	L	13, 15, 17, 53, 55				20mm
	68006360AA	1	2, 3, 6, 7	L	13, 15, 17, 53, 55				15mm
	68006445AA	1	2, 3, 6, 7	L	13, 15, 17, 53, 55				30mm
3	68006446AA	1	2, 3, 6, 7	L	17, 53, 55, 13, 15				STOPPER
4	05135206AA	AR	2, 3, 6, 7	L	13, 15, 17, 53, 55				WEATHERSTRIP
5									SEAL, Door
	68006500AA	1	2, 3, 6, 7	L	13, 15, 17, 53, 55				High Roof, Left Door
	68006501AA	1	2, 3, 6, 7	L	13, 15, 17, 53, 55				, Left Door
6									INSULATION
	68006518AA	1	2, 3, 6, 7	L	13, 15, 17, 53, 55				With Rear Floor Insulation [HGR], Right & Left
	68006519AA	1	3, 7	L	03, 05				, Right & Left
		1	2, 3, 6, 7	L	13, 15, 17, 53, 55				Right & Left
7	68014675AA	1	2, 3, 6, 7	L	13, 15, 17, 53, 55				SEAL, Door
8									WEATHERSTRIP, Cargo Door

SPRINTER (VB)

SERIES	LINE	BODY	ENGINE	TRANSMISSION
L = LOWLINE	3 = HD DODGE 2WD 2 = Med. Duty DODGE 2WD	03 = CAB CHASSIS WHEEL BASE 3 05 = CAB CHASSIS WHEEL BASE 5 13 = 119 WB 53 = 119 WB 15 = VAN WHEEL BASE 5 55 = WAGON WHEEL BASE 5 17 = VAN WHEEL BASE 7	EG2 = 3.5L V6 Gas Engine EXM = 3.0L V6 Turbo Diesel Engine	DGZ = 5-Speed Auto W5A380 Transmission

AR = use ase required - = Non illustrrated part

<< RETURN TO GROUP INDEX

Rear Door Panel
Figure DVB-410

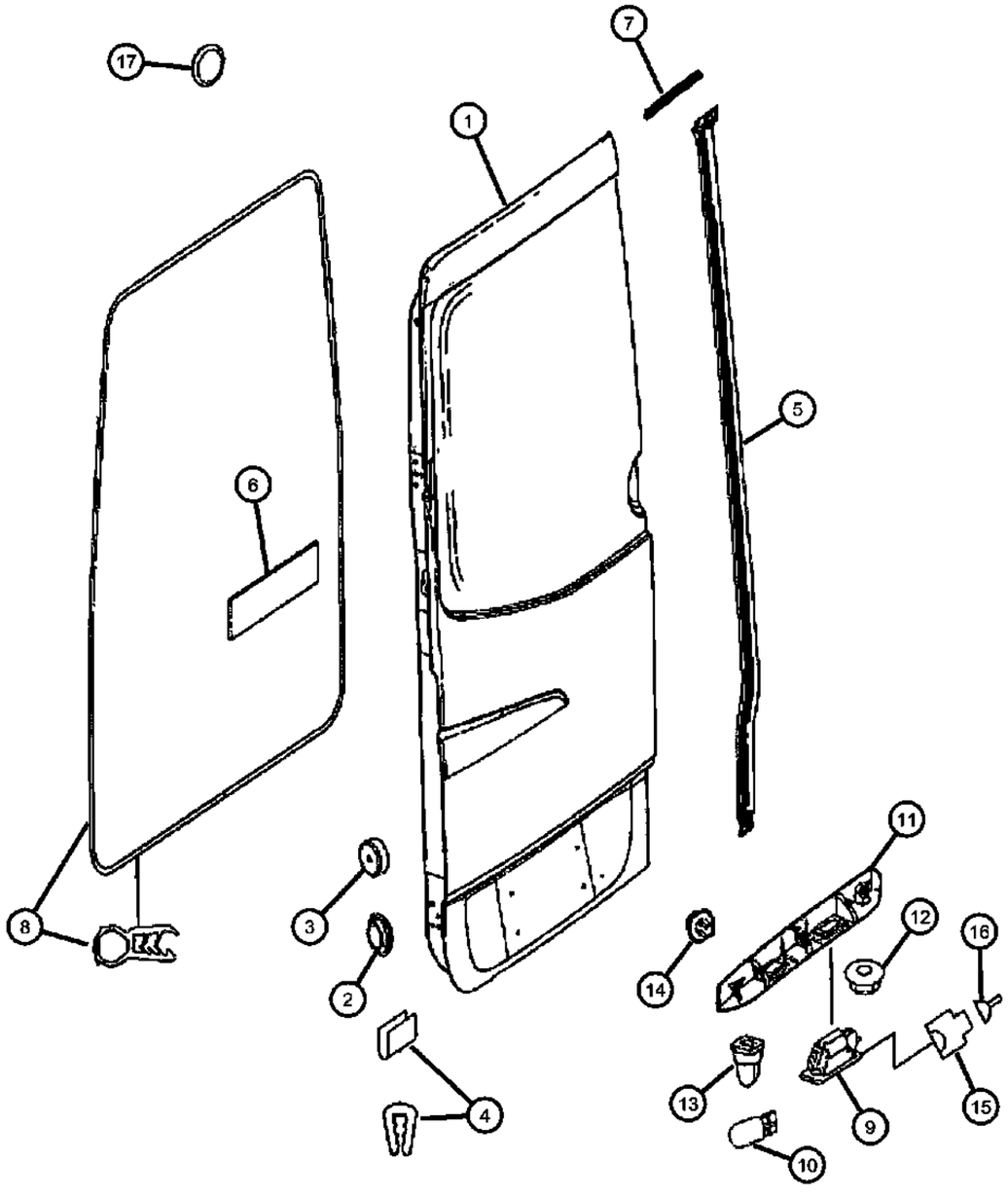

ITEM	PART NUMBER	QTY	LINE	SERIES	BODY	ENGINE	TRANS	TRIM	DESCRIPTION
	68014672AA	1	2, 3, 6, 7	L	13, 15, 17, 53, 55				High Roof
	68014673AA	1	2, 3, 6, 7	L	13, 15, 17, 53, 55				
9	68006502AA	2	2, 3, 6, 7	L	13, 15, 17, 53, 55				LAMP, License
10									BULB, 12V 5W
	05096968AA	2	3, 7	L	03, 05				
		2	2, 3, 6, 7	L	13, 15, 55, 17, 53				
11	1HE84XDVAA	1	2, 3, 6, 7	L	13, 15, 17, 53, 55				COVER, Lamp
12	68006505AA	2	2, 3, 6, 7	L	13, 15, 17, 53, 55				NUT
13	68006507AA	4	2, 3, 6, 7	L	13, 15, 17, 53, 55				RETAINER
14	68006504AA	3	2, 3, 6, 7	L					RETAINER
15	68011339AA	2	2, 3, 6, 7	L					CONNECTOR
16	05138912AA	AR	2, 3, 6, 7	L					TERMINAL
17	68006560AA	1	2, 3, 6, 7	L	13, 15, 17, 53, 55				PLUGRight

SPRINTER (VB)

SERIES	LINE	BODY	ENGINE	TRANSMISSION
L = LOWLINE	3 = HD DODGE 2WD 2 = Med. Duty DODGE 2WD	03 = CAB CHASSIS WHEEL BASE 3 05 = CAB CHASSIS WHEEL BASE 5 13 = 119 WB 53 = 119 WB 15 = VAN WHEEL BASE 5 55 = WAGON WHEEL BASE 5 17 = VAN WHEEL BASE 7	EG2 = 3.5L V6 Gas Engine EXM = 3.0L V6 Turbo Diesel Engine	DGZ = 5-Speed Auto W5A380 Transmission

AR = use ase required - = Non illustrrated part

<< RETURN TO GROUP INDEX

Hinges and Hardware
Figure DVB-420

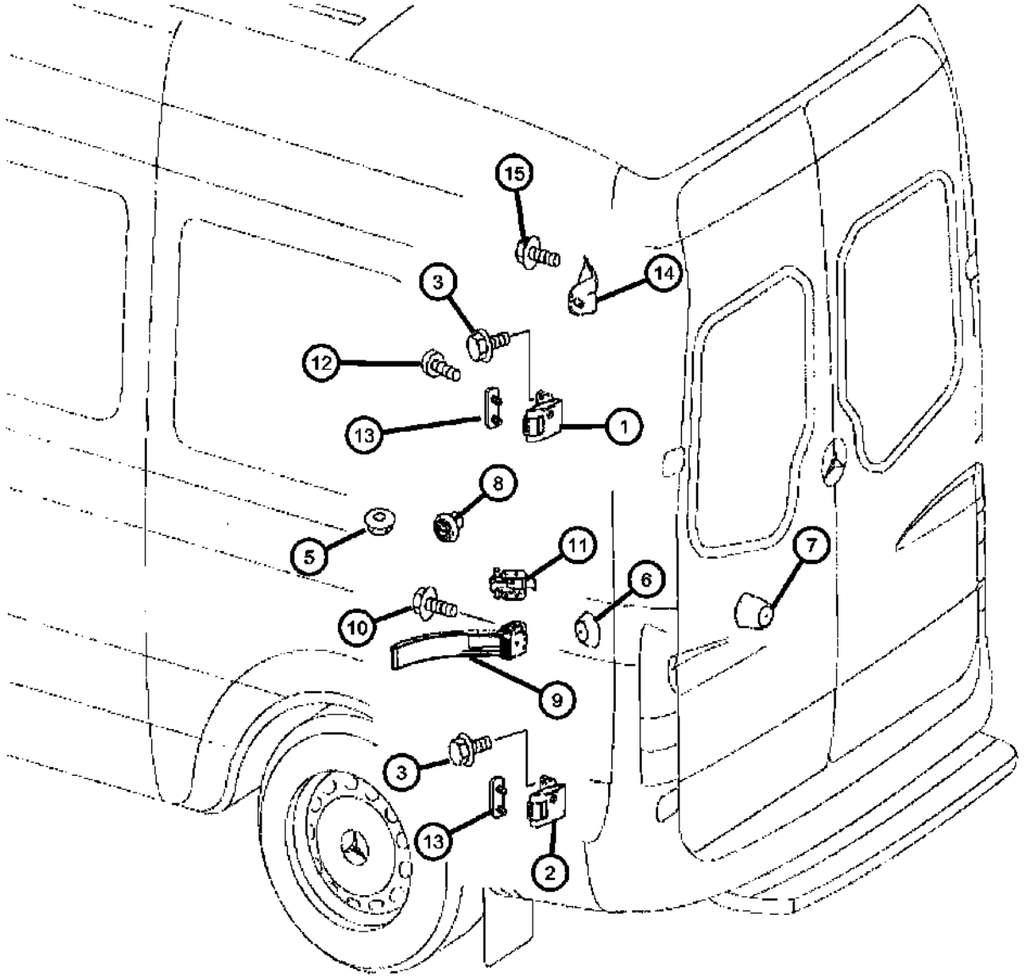

ITEM	PART NUMBER	QTY	LINE	SERIES	BODY	ENGINE	TRANS	TRIM	DESCRIPTION
1									HINGE, Rear Door
	68006452AA	1	2, 3, 6, 7	L	13, 15, 17, 53, 55				Top, Left
	68006454AA	1	2, 3, 6, 7	L	13, 15, 17, 53, 55				With [GLF], Top, Right
	68006455AA	1	2, 3, 6, 7	L	13, 15, 17, 53, 55				With [GLF], Top, Left
	68006562AA	1	2, 3, 6, 7	L	13, 15, 17, 53, 55				Top, Right
2									HINGE, Rear Door
	68006453AA	1	2, 3, 6, 7	L	13, 15, 17, 53, 55				Lower, Left
	68006456AA	1	2, 3, 6, 7	L	13, 15, 17, 53, 55				With [GLF], Lower, Right
	68006457AA	1	2, 3, 6, 7	L	13, 15, 17, 53, 55				With [GLF], Lower, Left
	68006563AA	1	2, 3, 6, 7	L	13, 15, 17, 53, 55				Lower, Right
3	06104155AA	12	2, 3, 6, 7	L	15, 17, 13, 53, 55				SCREW, [M8x25]
-4	06104157AB	12	2, 3, 6, 7	L	13, 15, 17, 53, 55				BOLT, Torx Head, M8x1.25x35.00
5	06104726AB	1	2, 3, 6, 7	L	13, 15, 17, 53, 55				NUT AND WASHER, Hex, M8x1.25
6	68006458AA	2	2, 3, 6, 7	L	15, 17, 55				BRACKET, Rubber Stop
7	68006459AA	2	2, 3, 6, 7	L	13, 15, 17, 53, 55				BRACKET, Rubber Stop At Door
8	68006461AA	2	2, 3, 6, 7	L					BUMPER, Door, Magnet
9	68006463AA	1	2, 3, 6, 7	L	13, 15, 17, 53, 55				BRACKET, Cargo Door Hinge, With [GLF], Right & Left
10									SCREW
	05104610AA	6	2, 3, 6, 7	L	13, 15, 17, 53, 55				[M8x16]
	06104141AA	2	2, 3, 6, 7	L	13, 15, 17, 53, 55				[M6x12]
11	68006464AA	1	2, 3, 6, 7	L	13, 15, 17, 53, 55				BRACKET, Cargo Door Hinge PillarRight & Left
12	06104141AA	4	2, 3, 6, 7	L	13, 15, 17, 53, 55				SCREW, [M6x12]
13	68006465AA	2	2, 3, 6, 7	L	17, 53, 55, 13, 15				STOPPERRight & Left

SPRINTER (VB)

SERIES	LINE	BODY	ENGINE	TRANSMISSION
L = LOWLINE	3 = HD DODGE 2WD 2 = Med. Duty DODGE 2WD	03 = CAB CHASSIS WHEEL BASE 3 05 = CAB CHASSIS WHEEL BASE 5 13 = 119 WB 53 = 119 WB 15 = VAN WHEEL BASE 5 55 = WAGON WHEEL BASE 5 17 = VAN WHEEL BASE 7	EG2 = 3.5L V6 Gas Engine EXM = 3.0L V6 Turbo Diesel Engine	DGZ = 5-Speed Auto W5A380 Transmission

Hinges and Hardware
Figure DVB-420

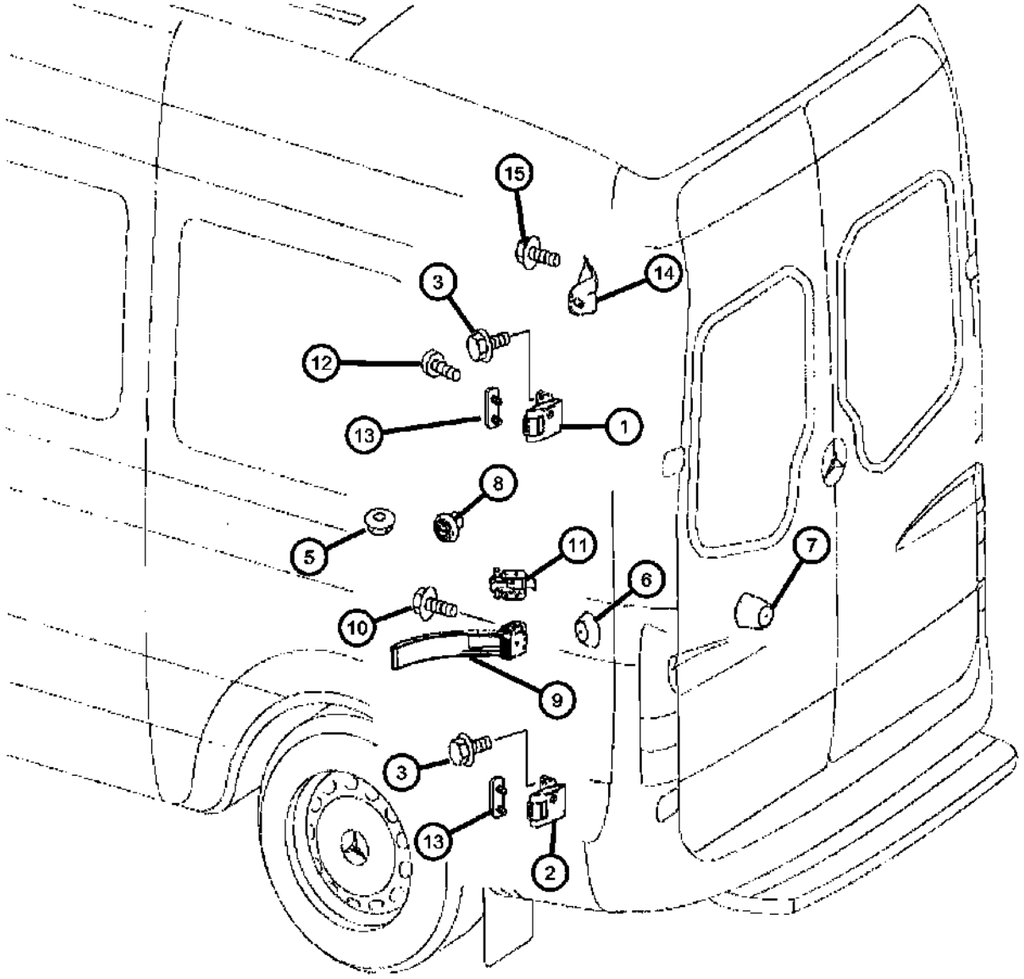

ITEM	PART NUMBER	QTY	LINE	SERIES	BODY	ENGINE	TRANS	TRIM	DESCRIPTION
14	68008799AA	2	2, 3, 6, 7	L	13, 15, 17, 53, 55				BRACKET
15	05073723AB	6	2, 3, 6, 7	L	13, 15, 17, 53, 55				SCREW, [M8x20]

SPRINTER (VB)

SERIES	LINE	BODY	ENGINE	TRANSMISSION
L = LOWLINE	3 = HD DODGE 2WD 2 = Med. Duty DODGE 2WD	03 = CAB CHASSIS WHEEL BASE 3 05 = CAB CHASSIS WHEEL BASE 5 13 = 119 WB 53 = 119 WB 15 = VAN WHEEL BASE 5 55 = WAGON WHEEL BASE 5 17 = VAN WHEEL BASE 7	EG2 = 3.5L V6 Gas Engine EXM = 3.0L V6 Turbo Diesel Engine	DGZ = 5-Speed Auto W5A380 Transmission

Right Rear Door Locking System
Figure DVB-430

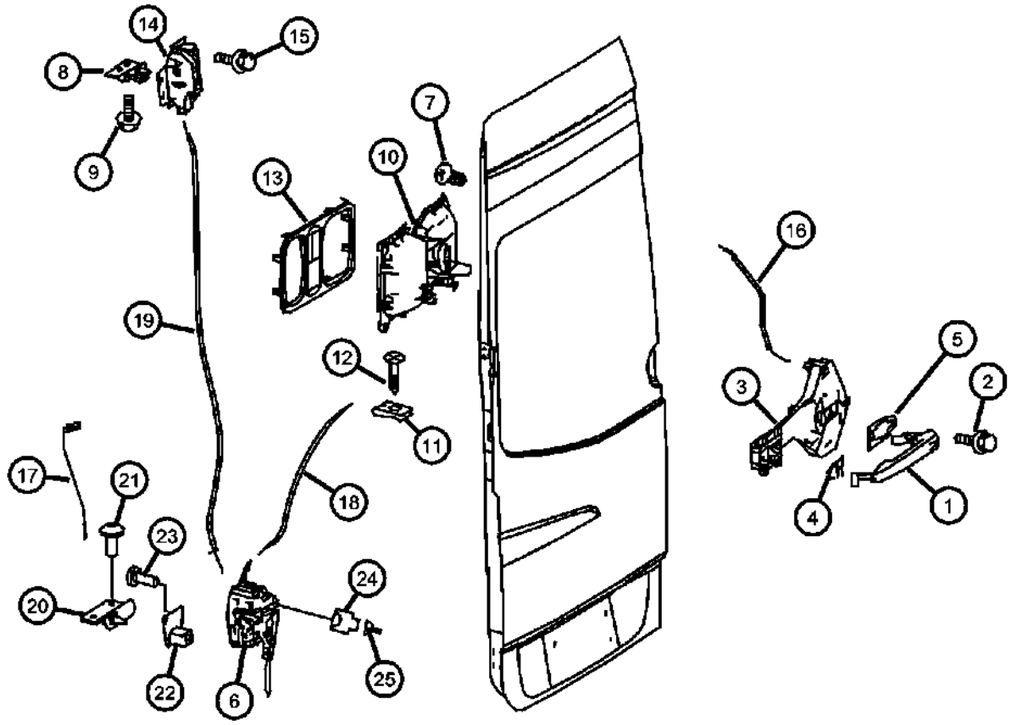

ITEM	PART NUMBER	QTY	LINE	SERIES	BODY	ENGINE	TRANS	TRIM	DESCRIPTION
1	68006564AA	1	2, 3, 6, 7	L	13, 15, 17, 53, 55				HANDLE, Front And Sliding Door
2	06104136AA	1	2, 3, 6, 7	L	13, 15, 17, 53, 55				SCREW
3	68006565AA	1	2, 3, 6, 7	L	13, 15, 17, 53, 55				BRACKET, Door Handle
4	68006566AA	1	2, 3, 6, 7	L	13, 15, 17, 53, 55				RETAINER
5	68006567AA	1	2, 3, 6, 7	L	13, 15, 17, 53, 55				RETAINER
6	68017888AA	1	2, 3, 6, 7	L	13, 15, 17, 53, 55				LATCH, Rear Door
7									SCREW, M6x16
	05101576AA	3	2, 3, 6, 7	L	13, 15, 17, 53, 55				
		3	3, 7	L	03, 05				
8	68006466AA	1	2, 3, 6, 7	L	13, 15, 17, 53, 55				STRIKER, Door
9									SCREW
	06104129AA	2	2, 3, 6, 7	L	13, 15, 17, 53, 55				
		2	3, 7	L	05, 03				
10									HANDLE, Inside Release
	1HE50XDVAA	1	2, 3, 6, 7	L	13, 15, 17, 53, 55				[A6]
		1	2, 3, 6, 7	L	13, 15, 17, 53, 55				[E7]
		1	2, 3, 6, 7	L	13, 15, 17, 53, 55				[F7]
11									NUT, Spring
	68006573AA	8	2, 3, 6, 7	L	13, 15, 17, 53, 55				
		14	3, 7	L	03, 05				
12									SCREW, Tapping
	06104566AA	8	2, 3, 6, 7	L	13, 15, 17, 53, 55				
		2	3, 7	L	03, 05				
13									COVER
	1HS08NCVAA	1	2, 3, 6, 7	L	13, 15, 17, 53, 55				[A6]

SPRINTER (VB)

SERIES	LINE	BODY	ENGINE	TRANSMISSION
L = LOWLINE	3 = HD DODGE 2WD 2 = Med. Duty DODGE 2WD	03 = CAB CHASSIS WHEEL BASE 3 05 = CAB CHASSIS WHEEL BASE 5 13 = 119 WB 53 = 119 WB 15 = VAN WHEEL BASE 5 55 = WAGON WHEEL BASE 5 17 = VAN WHEEL BASE 7	EG2 = 3.5L V6 Gas Engine EXM = 3.0L V6 Turbo Diesel Engine	DGZ = 5-Speed Auto W5A380 Transmission

Right Rear Door Locking System
Figure DVB-430

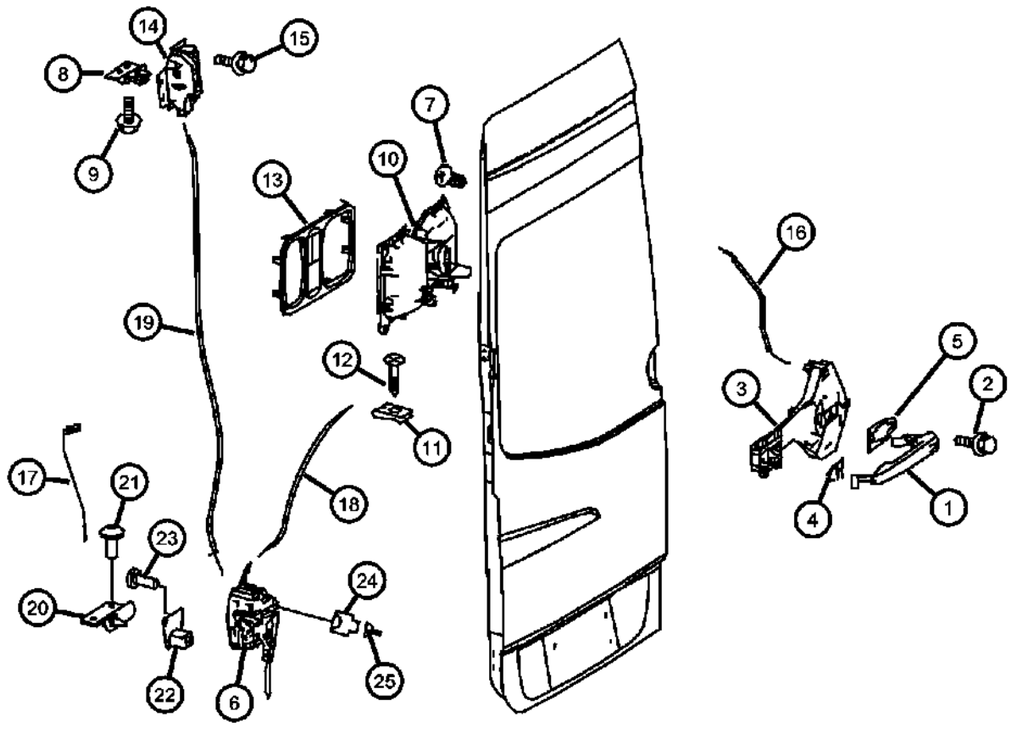

ITEM	PART NUMBER	QTY	LINE	SERIES	BODY	ENGINE	TRANS	TRIM	DESCRIPTION
		1	2, 3, 6, 7	L	13, 15, 17, 53, 55				[E7]
		1	2, 3, 6, 7	L	13, 15, 17, 53, 55				[F7]
14	68006470AA	1	2, 3, 6, 7	L	13, 15, 17, 53, 55				LOCK, Door
15									SCREW
	06104142AA	3	2, 3, 6, 7	L	13, 15, 17, 53, 55				
		2	3, 7	L	03, 05				
16	68006575AA	1	2, 3, 6, 7	L	13, 15, 55, 17, 53				CABLE
17	68006576AA	1	2, 3, 6, 7	L	13, 15, 17, 53, 55				ROD, Lock
18	68006577AA	1	2, 3, 6, 7	L	13, 15, 17, 53, 55				ROD, Lock
19									CABLE
	68006578AA	1	2, 3, 6, 7	L	13, 15, 17, 53, 55				
	68006579AA	1	2, 3, 6, 7	L	13, 15, 17, 53, 55				High Roof
20	68006580AA	1	2, 3, 6, 7	L	13, 15, 17, 53, 55				GUIDE, Door Stabilizer
21									SCREW
	06104129AA	2	3, 7	L	03, 05				
		3	2, 3, 6, 7	L	13, 15, 17, 53, 55				
22	68006581AA	1	2, 3, 6, 7	L	13, 15, 17, 53, 55				GUIDE, Door Stabilizer
23									SCREW
	06104142AA	2	3, 7	L	03, 05				
		2	2, 3, 6, 7	L	13, 15, 17, 53, 55				
24	68011434AA	1	2, 3, 6, 7	L					CONNECTOR
25	68013248AA	AR	2, 3, 6, 7	L					TERMINAL

SPRINTER (VB)

SERIES	LINE	BODY	ENGINE	TRANSMISSION
L = LOWLINE	3 = HD DODGE 2WD 2 = Med. Duty DODGE 2WD	03 = CAB CHASSIS WHEEL BASE 3 05 = CAB CHASSIS WHEEL BASE 5 13 = 119 WB 53 = 119 WB 15 = VAN WHEEL BASE 5 55 = WAGON WHEEL BASE 5 17 = VAN WHEEL BASE 7	EG2 = 3.5L V6 Gas Engine EXM = 3.0L V6 Turbo Diesel Engine	DGZ = 5-Speed Auto W5A380 Transmission

AR = use ase required - = Non illustrrated part

Left Rear Door Locking System
Figure DVB-440

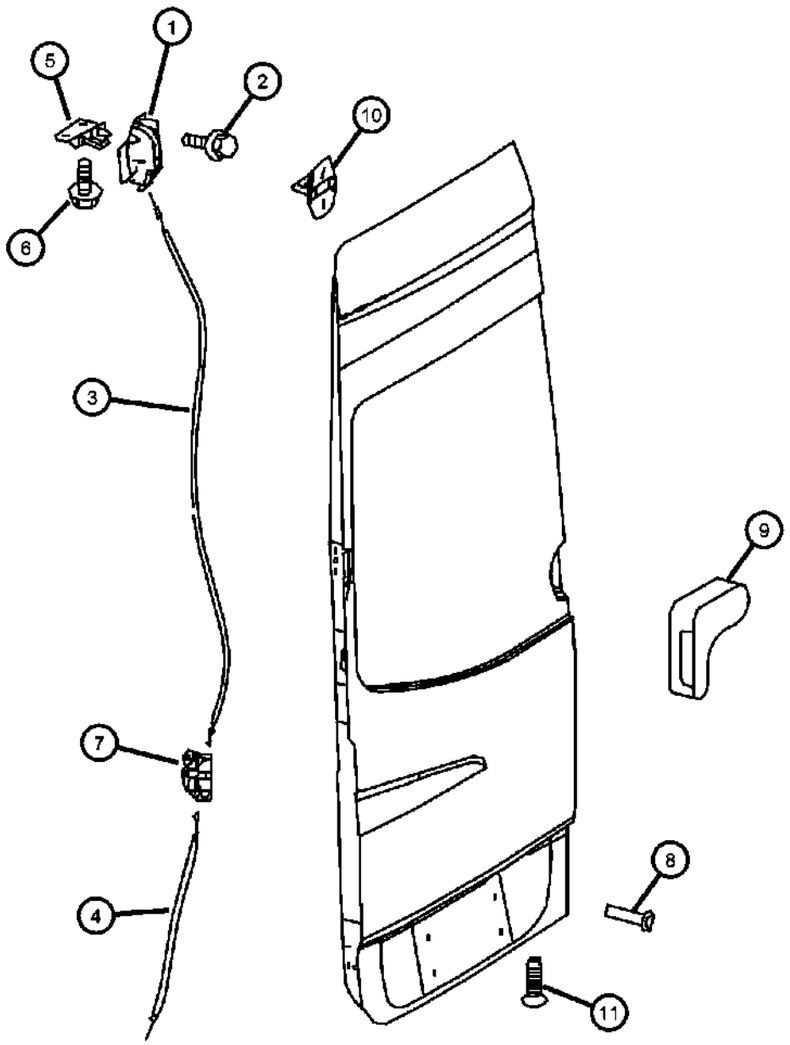

ITEM	PART NUMBER	QTY	LINE	SERIES	BODY	ENGINE	TRANS	TRIM	DESCRIPTION
1	68006470AA	2	2, 3, 6, 7	L	13, 15, 17, 53, 55				LOCK, Door
2	06104142AA	6	2, 3, 6, 7	L	13, 15, 17, 53, 55				SCREW
3									CABLE
	68006471AA	1	2, 3, 6, 7	L	13, 15, 17, 53, 55				Top Left, High Roof
	68006472AA	1	2, 3, 6, 7	L	13, 15, 17, 53, 55				Top Left
4	68006473AA	1	2, 3, 6, 7	L	13, 15, 17, 53, 55				CABLE, Bottom Left
5	68006466AA	2	2, 3, 6, 7	L	13, 15, 17, 53, 55				STRIKER, Door
6	06104129AA	4	2, 3, 6, 7	L	13, 15, 17, 53, 55				SCREW
7	68006467AA	1	2, 3, 6, 7	L	13, 15, 17, 53, 55				LATCH
8	06104661AA	2	2, 3, 6, 7	L	13, 15, 17, 53, 55				SCREW
9	1HG35NC-VAA	1	2, 3, 6, 7	L	13, 15, 17, 53, 55				HANDLE, Rear Door Exterior
10	68006469AA	1	2, 3, 6, 7	L					LATCH
11	05103715AA	2	2, 3, 6, 7	L	13, 15, 17, 53, 55				SCREW

SPRINTER (VB)

SERIES	LINE	BODY	ENGINE	TRANSMISSION
L = LOWLINE	3 = HD DODGE 2WD 2 = Med. Duty DODGE 2WD	03 = CAB CHASSIS WHEEL BASE 3 05 = CAB CHASSIS WHEEL BASE 5 13 = 119 WB 53 = 119 WB 15 = VAN WHEEL BASE 5 55 = WAGON WHEEL BASE 5 17 = VAN WHEEL BASE 7	EG2 = 3.5L V6 Gas Engine EXM = 3.0L V6 Turbo Diesel Engine	DGZ = 5-Speed Auto W5A380 Transmission

Outside Rear View Mirror
Figure DVB-510

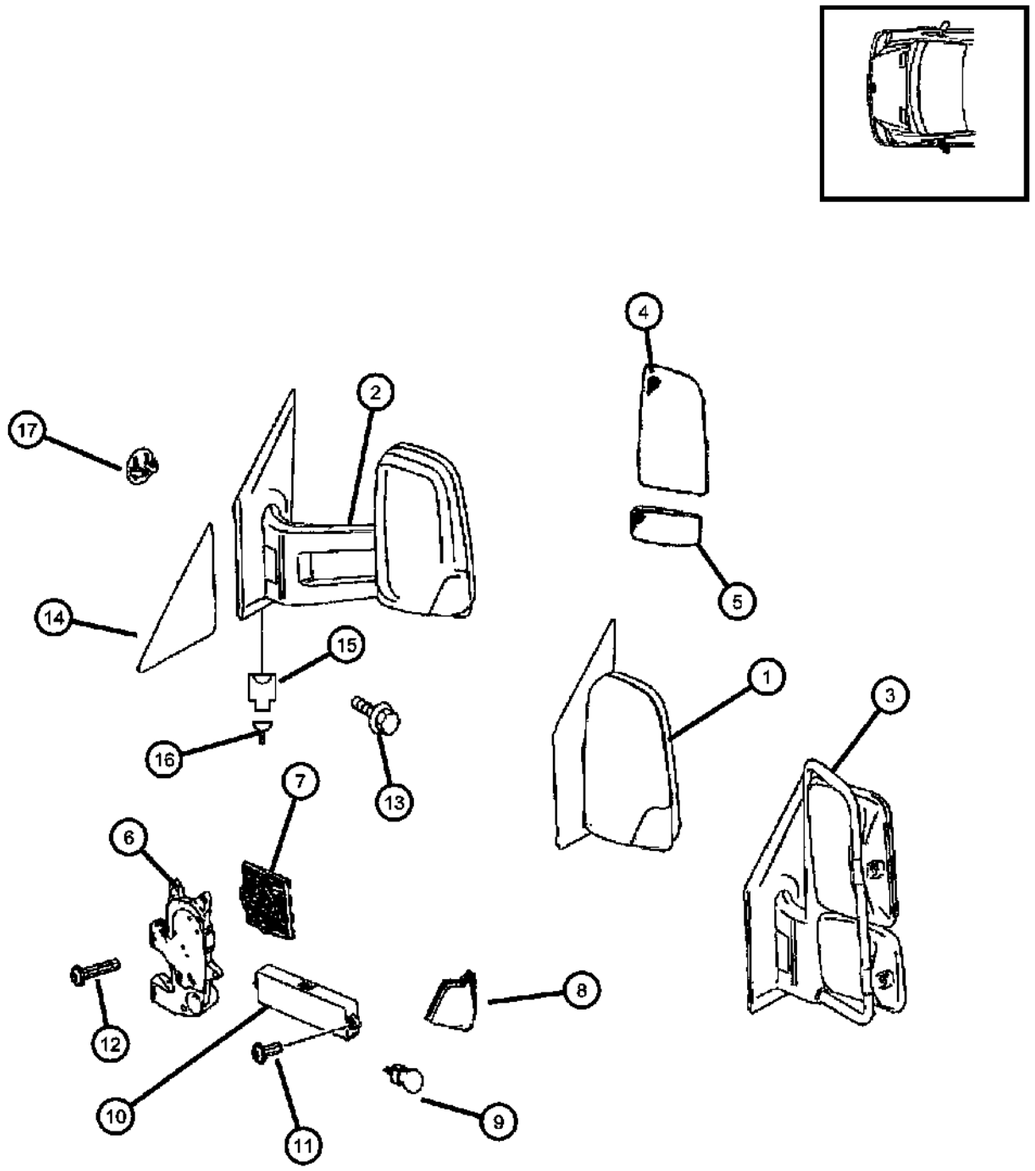

ITEM	PART NUMBER	QTY	LINE	SERIES	BODY	ENGINE	TRANS	TRIM	DESCRIPTION
1									MIRROR, Outside Rearview
	68009980AA	1	2, 3, 6, 7	L					With [GTB] Without [XAG], Right
	68009981AA	1	2, 3, 6, 7	L					With [GTB] Without [XAG], Left
	68009982AA	1	2, 3, 6, 7	L	13, 15, 17, 53, 55				With [GTB & XAG], Right
	68009983AA	1	2, 3, 6, 7	L	13, 15, 17, 53, 55				With [GTB & XAG], Left
	68009988AA	1	2, 3, 6, 7	L	03, 05, 13, 15, 17				Without [GTB & XAG], Right
	68009989AA	1	2, 3, 6, 7	L	03, 05, 13, 15, 17				Without [GTB & XAG], Left
2									MIRROR, Outside Rearview
	68009974AA	1	3, 7	L	03, 05				With [XZE] Without [GTB], Right
	68009975AA	1	3, 7	L	03, 05				With [XZE] Without [GTB], Left
	68009976AA	1	3, 7	L	03, 05				With [XZE+GTB], Right
	68009977AA	1	3, 7	L	03, 05				With [XZE+GTB], Left
	68009988AA	1	2, 3, 6, 7	L	03, 05, 13, 15, 17				Without [GTB + XAG], Right
	68009989AA	1	2, 3, 6, 7	L	03, 05, 13, 15, 17				Without [GTB + XAG], Left
	68042984AA	1	2, 3, 6, 7	L	03, 05, 13, 15, 17				Without [GTB And XAG], Left
3									MIRROR, Outside Rearview
	68009978AA	1	3, 7	L	03, 05				With [GYA] / For United Parcel Service [UPS] / Brown In Color, Left
		1	2, 3, 6, 7	L	13, 15, 17				With [GYA] / For United Parcel Service [UPS] / Brown In Color, Left
	68009979AA	1	2, 3, 6, 7	L	03, 05, 13, 15, 17				With [GYB] / Black In Color, Left
	68009989AA	1	2, 3, 6, 7	L	03, 05, 13, 15, 17				With [GYB] / Black In Color, Right
	68010088AA	1	3, 7	L	03, 05				With [GYA] / For United Parcel Service [UPS] / Brown In Color, Right
		1	2, 3, 6, 7	L	13, 15, 17				With [GYA] / For United Parcel Service [UPS] / Brown In Color, Right
4									GLASS, Mirror Replacement

SPRINTER (VB)

SERIES	LINE	BODY	ENGINE	TRANSMISSION
L = LOWLINE	3 = HD DODGE 2WD 2 = Med. Duty DODGE 2WD	03 = CAB CHASSIS WHEEL BASE 3 05 = CAB CHASSIS WHEEL BASE 5 13 = 119 WB 53 = 119 WB 15 = VAN WHEEL BASE 5 55 = WAGON WHEEL BASE 5 17 = VAN WHEEL BASE 7	EG2 = 3.5L V6 Gas Engine EXM = 3.0L V6 Turbo Diesel Engine	DGZ = 5-Speed Auto W5A380 Transmission

Outside Rear View Mirror
Figure DVB-510

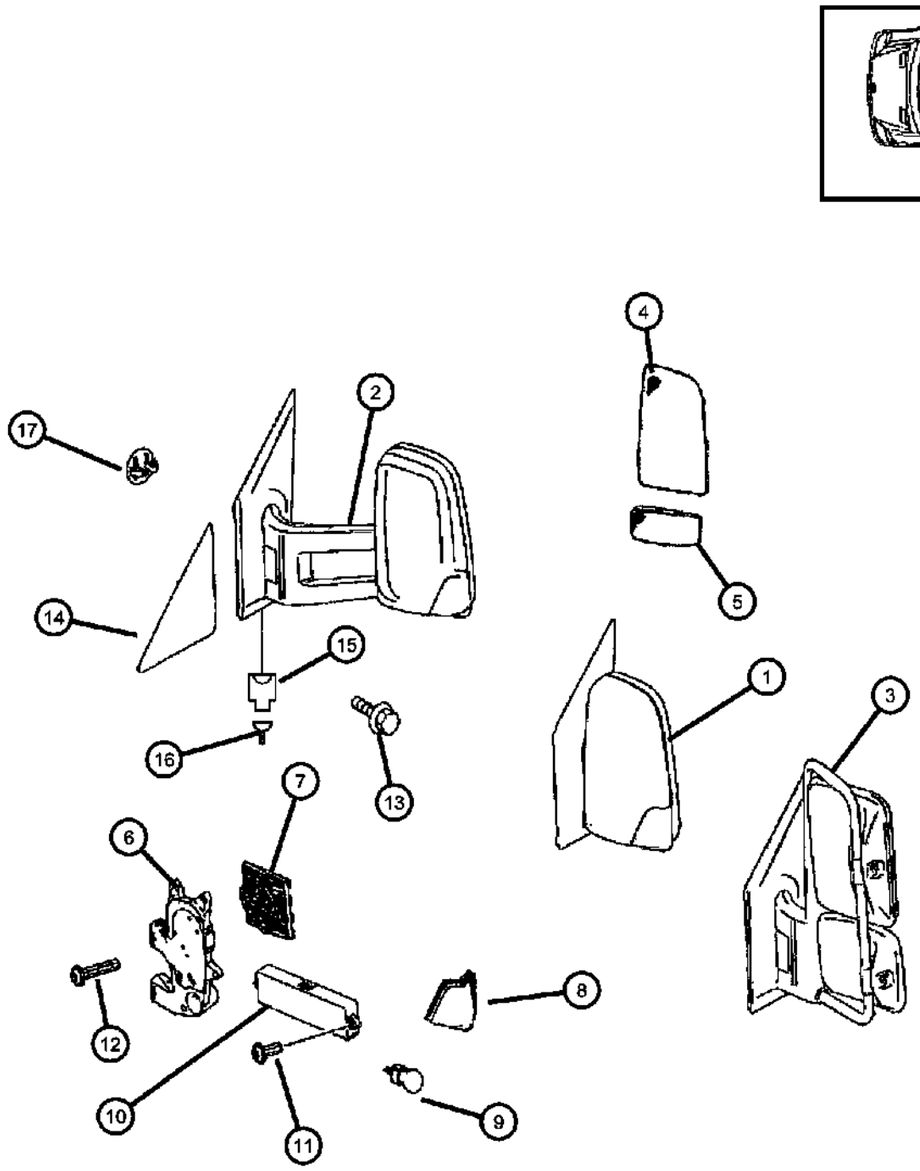

ITEM	PART NUMBER	QTY	LINE	SERIES	BODY	ENGINE	TRANS	TRIM	DESCRIPTION
	68009992AA	1	3, 7	L	03, 05				With [XZE] Without [GTB], Left, Upper
		1	2, 3, 6, 7	L	13, 15, 17				Without [XAG], Left, Upper
	68009993AA	1	2, 3, 6, 7	L	13, 15, 17, 53, 55				With [GTB + XAG], Left, Upper
	68010092AA	1	3, 7	L	03, 05				With [XZE] Without [GTB], Right, Upper
		1	2, 3, 6, 7	L	13, 15, 17				Without [XAG], Right, Upper
	68010118AA	1	2, 3, 6, 7	L	13, 15, 17, 53, 55				With [GTB + XAG], Right, Upper
5									GLASS, Mirror Replacement
	68009995AA	1	2, 3, 6, 7	L					Without [GYA] & Without [GYB], Lower, Left
	68010093AA	1	2, 3, 6, 7	L					Without [GYA] & Without [GYB], Lower, Right
6									MOTOR, Mirror
	68009997AA	1	3, 7	L	03, 05				With [GTB], Right & Left
		1	2, 3, 6, 7	L	13, 15, 17, 53, 55				With [GTB], Right & Left
7	68009996AA	1	2, 3, 6, 7	L					ADJUSTER, Without [GTB] / Manual Mirror
8									LAMP, Turn Signal
	68010001AA	1	2, 3, 6, 7	L					Left
	68010096AA	1	2, 3, 6, 7	L					Right
9	68010004AA	1	2, 3, 6, 7	L					SOCKET, Socket & Bulb
10									DISPLAY, Parking Assist
	68010003AA	1	2, 3, 6, 7	L	13, 15, 17, 53, 55				With [GTB & XAG], Left
	68010120AA	1	2, 3, 6, 7	L	13, 15, 17, 53, 55				With [GTB & XAG], Right
11	06104625AA	2	2, 3, 6, 7	L	13, 15, 17, 53, 55				SCREW, Hex Head, M4.0X1.79X12.0
12	06104629AA	4	2, 3, 6, 7	L	13, 15, 17, 53, 55				SCREW, Mirror Motor Mounting
13									SCREW, Hex Flange Head
	06104121AA	2	2, 3, 6, 7	L	13, 15, 17, 53, 55				Mirror Assembly To Door [M6x16]
		2	3, 7	L	03, 05				Mirror Assembly To Door [M6x16]
14									COVER, Mirror Flag

SPRINTER (VB)

SERIES	LINE	BODY	ENGINE	TRANSMISSION
L = LOWLINE	3 = HD DODGE 2WD 2 = Med. Duty DODGE 2WD	03 = CAB CHASSIS WHEEL BASE 3 05 = CAB CHASSIS WHEEL BASE 5 13 = 119 WB 53 = 119 WB 15 = VAN WHEEL BASE 5 55 = WAGON WHEEL BASE 5 17 = VAN WHEEL BASE 7	EG2 = 3.5L V6 Gas Engine EXM = 3.0L V6 Turbo Diesel Engine	DGZ = 5-Speed Auto W5A380 Transmission

Outside Rear View Mirror
Figure DVB-510

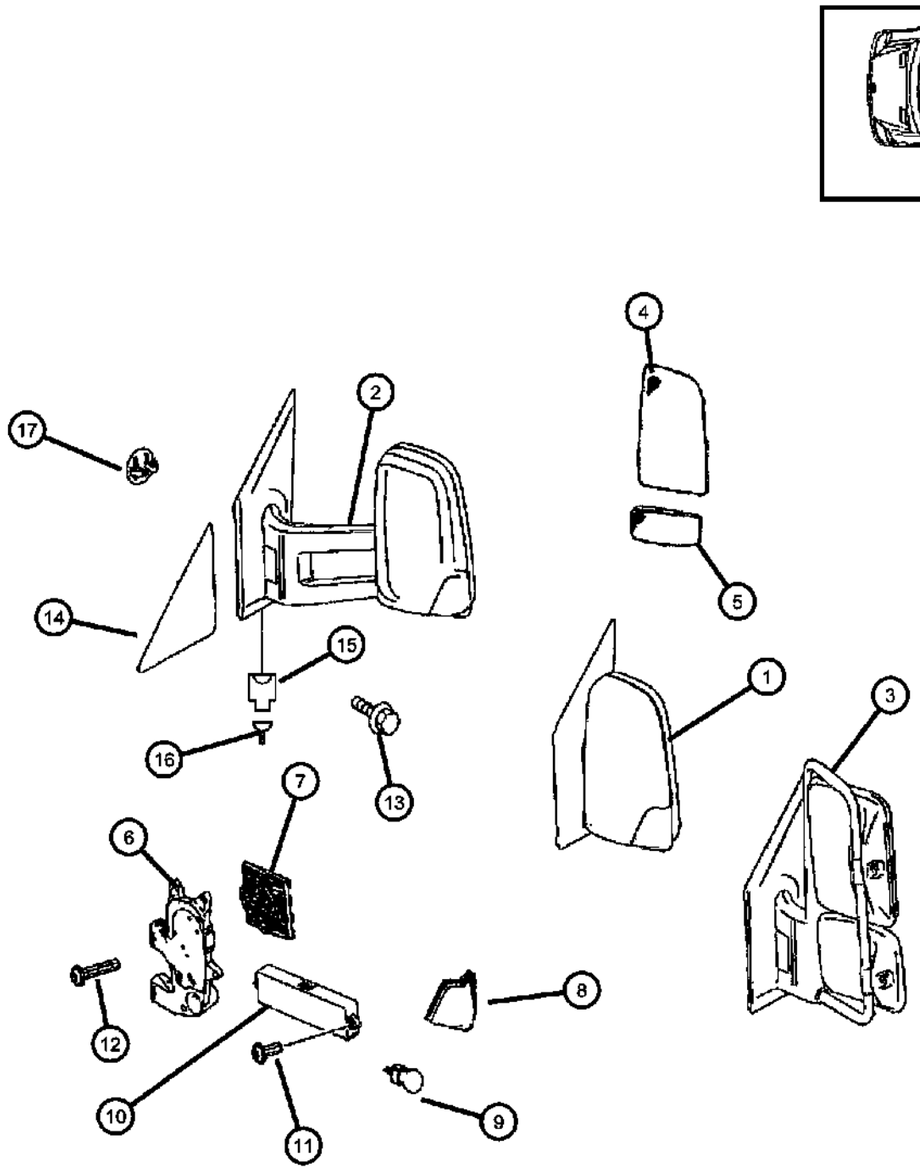

ITEM	PART NUMBER	QTY	LINE	SERIES	BODY	ENGINE	TRANS	TRIM	DESCRIPTION
	68009990AA	1	2, 3, 6, 7	L					Left
	68010090AA	1	2, 3, 6, 7	L					Right
15									INSULATOR, 6 Way
	05120260AA	1	2, 3, 6, 7	L	13, 15, 17, 53, 55				[6 Pin / M21/6]
		1	3, 7	L	03, 05				[6 Pin / M21/6]
16									TERMINAL
	05103873AA	3	3, 7	L	03, 05				[.75 MM2 MQS;M21/6]
		3	2, 3, 6, 7	L	13, 15, 17, 53, 55				[.75 MM2 MQS;M21/6]
17									PLUG, Body
	05125552AA	1	3, 7	L	03, 05				Screw Cover
		1	2, 3, 6, 7	L	13, 15, 17, 53, 55				Screw Cover

SPRINTER (VB)

SERIES	LINE	BODY	ENGINE	TRANSMISSION
L = LOWLINE	3 = HD DODGE 2WD 2 = Med. Duty DODGE 2WD	03 = CAB CHASSIS WHEEL BASE 3 05 = CAB CHASSIS WHEEL BASE 5 13 = 119 WB 53 = 119 WB 15 = VAN WHEEL BASE 5 55 = WAGON WHEEL BASE 5 17 = VAN WHEEL BASE 7	EG2 = 3.5L V6 Gas Engine EXM = 3.0L V6 Turbo Diesel Engine	DGZ = 5-Speed Auto W5A380 Transmission

Group - EVB

Exterior Ornamentation

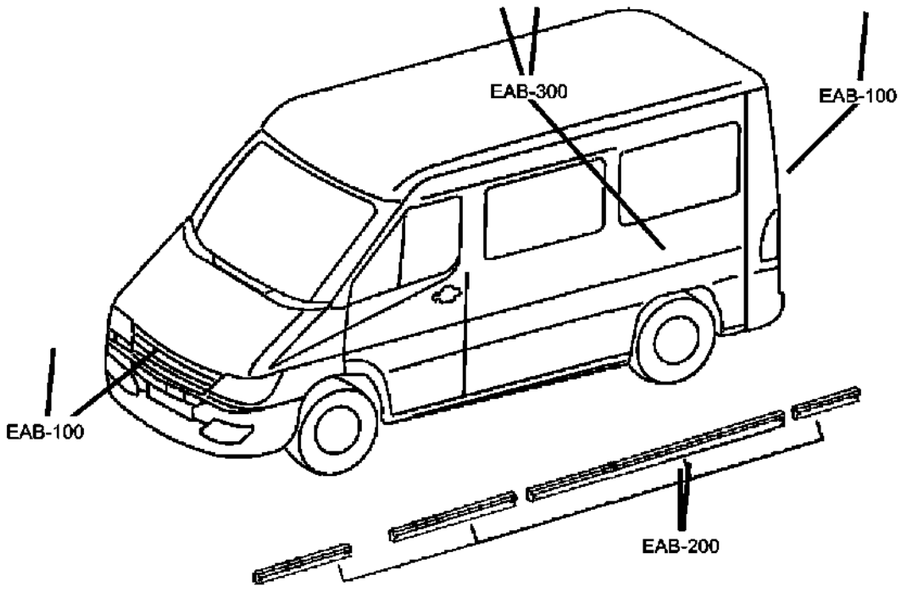

EVB-100 Nameplates	EVB-200 Moldings and Ornamentation		
	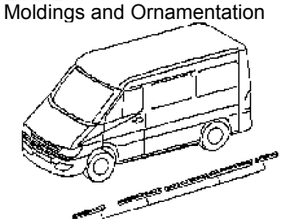		

Group - EVB Exterior Ornamentation

Illustration Title — Group-Fig. No.

Nameplates

Nameplates ..... Fig. EVB - 110

Moldings and Ornamentation

Moldings ..... Fig. EVB - 205
Moldings ..... Fig. EVB - 210
Splash Guards ..... Fig. EVB - 220

Nameplates
Figure EVB-110

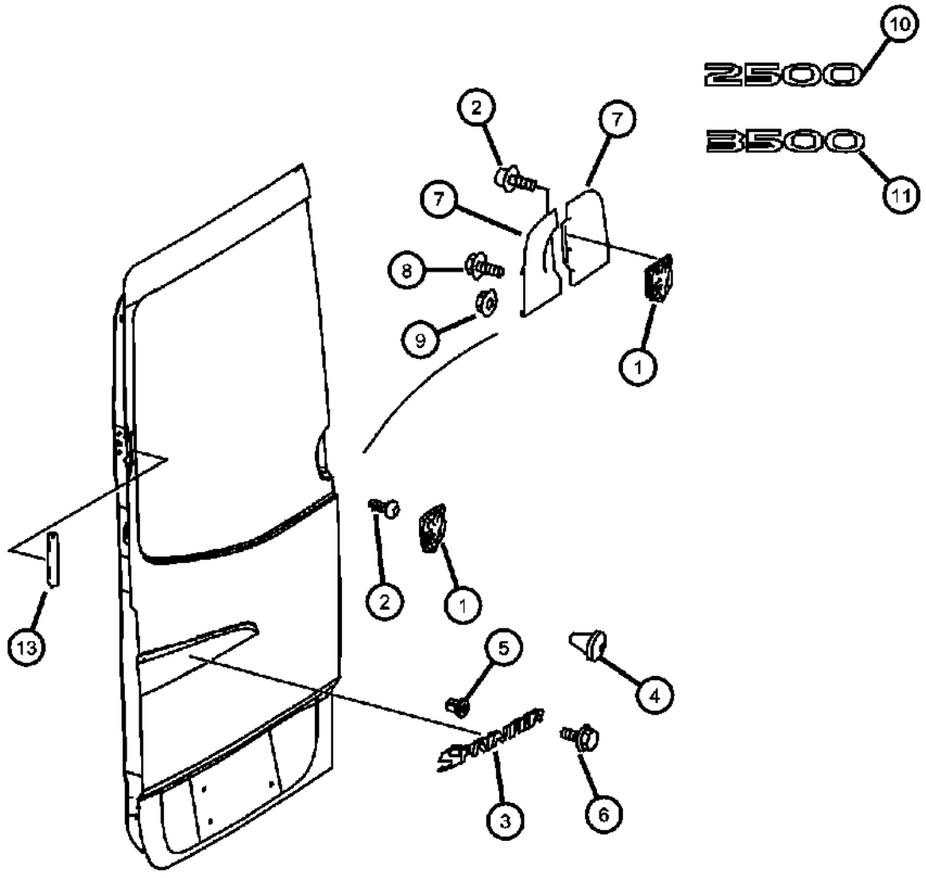

ITEM	PART NUMBER	QTY	LINE	SERIES	BODY	ENGINE	TRANS	TRIM	DESCRIPTION
1									MEDALLION, Ram Head
	1JA16DX9AA	1	2, 3	L	13, 15, 17, 53, 55				
	68006601AA	1	2, 3	L					
2									SCREW, Hex Head
	06104632AA	1	2, 3, 6, 7	L	53, 55				
		4	2, 3, 6, 7	L	13, 15, 17, 53, 55				
3	68006517AA	1	2, 3, 6, 7	L	13, 15, 17, 53, 55				NAMEPLATE, SPRINTER
4	05142981AA	2	2, 3, 6, 7	L	13, 15, 17, 53, 55				GROMMET, License Plate Mounting
5	05103841AA	1	2, 3, 6, 7	L	15, 17, 53, 55, 13				NUT, Push In, License Plate Mounting
6									SCREW, Hex Head
	06104567AA	2	3, 7	L	03, 05				License Plate Mounting
		2	2, 3, 6, 7	L	13, 15, 17, 53, 55				License Plate Mounting
7									COVER
	1HF06DX9AA	1	2, 3, 6, 7	L	13, 15, 17, 53, 55				Left Door, [GEM]
	1HF07DX9AA	1	2, 3, 6, 7	L	13, 15, 17, 53, 55				Right Door, [GEM]
	1HF60DX9AA	1	2, 3	L	13, 15, 17, 53, 55				Right Door, [MG4] and [JHB]
	1HF62DX9AA	1	2, 3	L	13, 15, 17, 53, 55				Left Door, [MG4] and [JHB]
	1HF64XDVAA	1	2, 3	L	13, 15, 17				Left Door, [MG4]
	1HF65XDVAA	1	2, 3	L	13, 15, 17				Right Door, [MG4] Without [JHB]
	68006494AA	1	2, 3, 6, 7	L	13, 15, 17, 53, 55				[GEM], Left Door Without Wiper Hole
	68006495AA	1	2, 3, 6, 7	L	13, 15, 17, 53, 55				[GEH], Left Door
	68006593AA	1	2, 3, 6, 7	L	53, 13, 15, 17, 55				[GEM], Right Door Without Wiper Hole
	68006594AA	1	2, 3, 6, 7	L	13, 15, 17, 53, 55				[GEH], Right Door
8	68006596AA	2	2, 3, 6, 7	L	13, 15, 17				SCREW
9	06104707AA	1	2, 3, 6, 7	L	15, 17, 53, 55, 13				NUT, M5

SPRINTER (VB)

SERIES	LINE	BODY	ENGINE	TRANSMISSION
L = LOWLINE	3 = HD DODGE 2WD 2 = Med. Duty DODGE 2WD	03 = CAB CHASSIS WHEEL BASE 3 05 = CAB CHASSIS WHEEL BASE 5 13 = 119 WB 53 = 119 WB 15 = VAN WHEEL BASE 5 55 = WAGON WHEEL BASE 5 17 = VAN WHEEL BASE 7	EG2 = 3.5L V6 Gas Engine EXM = 3.0L V6 Turbo Diesel Engine	DGZ = 5-Speed Auto W5A380 Transmission

Nameplates
Figure EVB-110

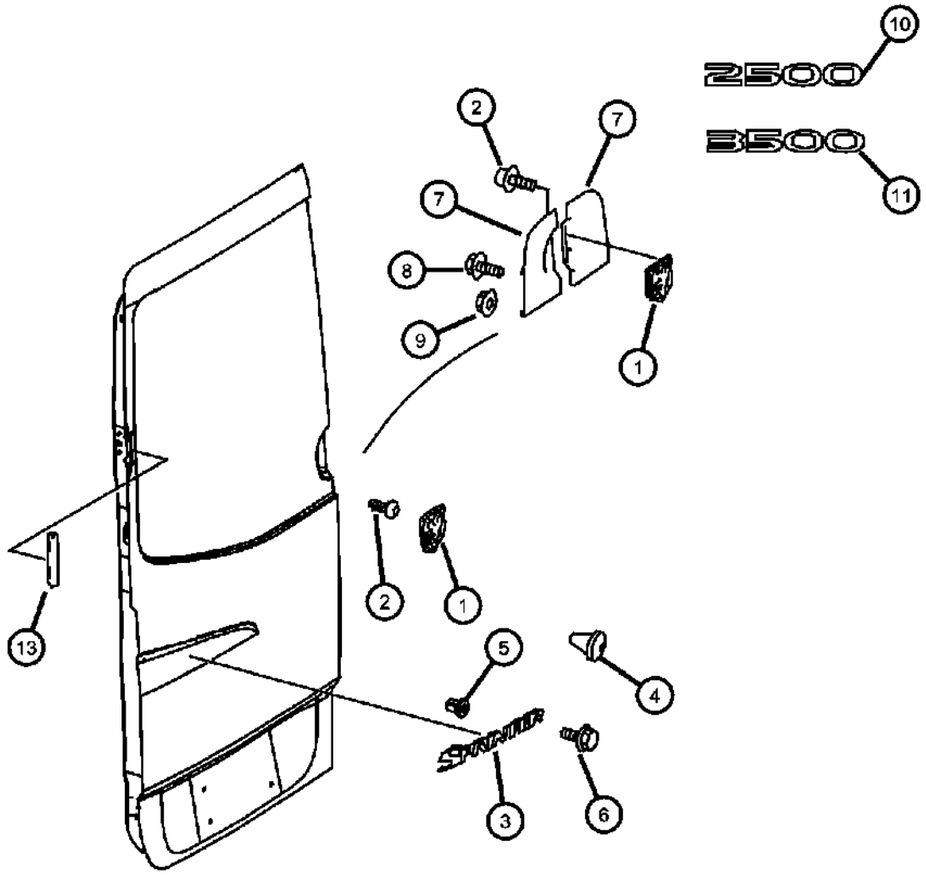

ITEM	PART NUMBER	QTY	LINE	SERIES	BODY	ENGINE	TRANS	TRIM	DESCRIPTION
10	55077331AB	2	2	L	13, 15, 17, 53, 55				NAMEPLATE, Ram 2500
11	55077332AB	2	3	L	03, 05, 13, 15, 17				NAMEPLATE, Ram 3500
-12	68020891AA	1	6, 7	L	13, 15, 17, 53, 55				BADGE, [Freightliner Badge]
13									COVER
	68010099AA	1	3, 7	L	03, 05				
		1	2, 3, 6, 7	L	13, 15, 17, 53, 55				
-14	68018863AA	1	2, 3, 6, 7	L					NAMEPLATE, [CRD] Name Plate

SPRINTER (VB)

SERIES	LINE	BODY	ENGINE	TRANSMISSION
L = LOWLINE	3 = HD DODGE 2WD 2 = Med. Duty DODGE 2WD	03 = CAB CHASSIS WHEEL BASE 3 05 = CAB CHASSIS WHEEL BASE 5 13 = 119 WB 53 = 119 WB 15 = VAN WHEEL BASE 5 55 = WAGON WHEEL BASE 5 17 = VAN WHEEL BASE 7	EG2 = 3.5L V6 Gas Engine EXM = 3.0L V6 Turbo Diesel Engine	DGZ = 5-Speed Auto W5A380 Transmission

Moldings
Figure EVB-205

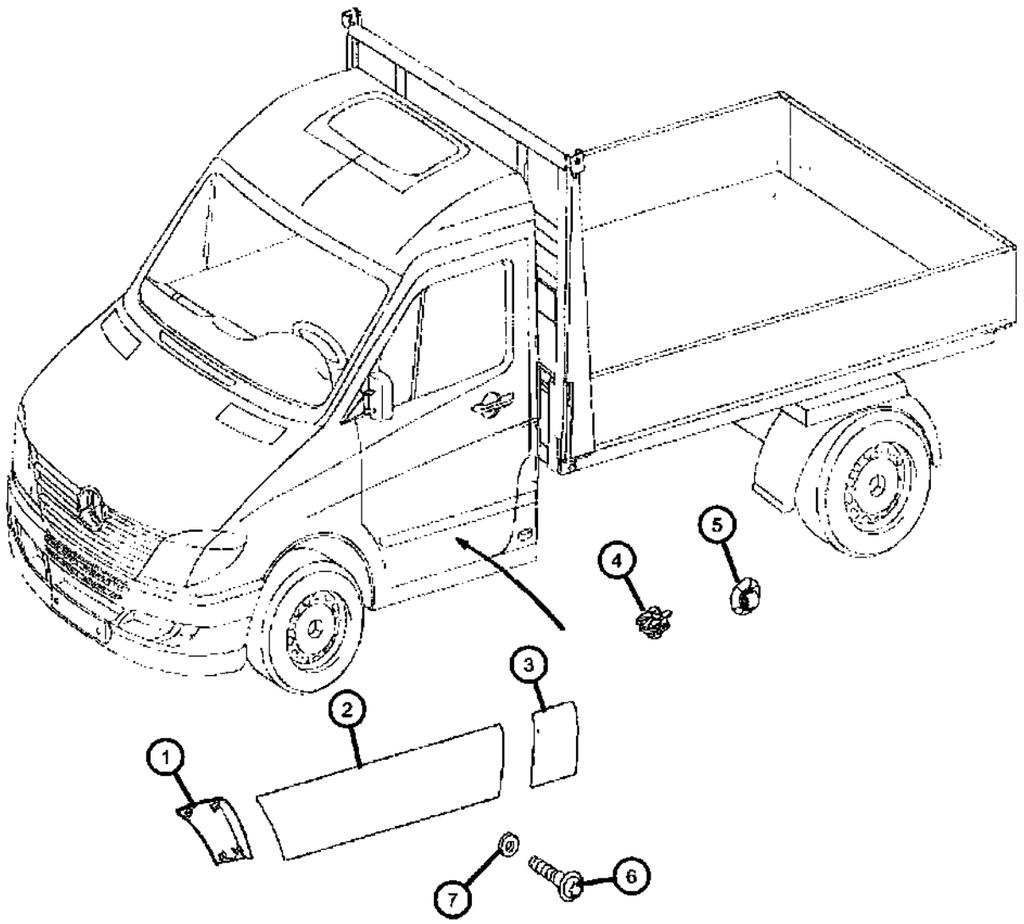

ITEM	PART NUMBER	QTY	LINE	SERIES	BODY	ENGINE	TRANS	TRIM	DESCRIPTION
1									MOLDING, Fender
	1HB77P01AA	1	2, 3, 6, 7	L					Right
	1JD64P01AA	1	2, 3, 6, 7	L					Left
2									MOLDING, Front Door
	1HB75P01AA	1	2, 3, 6, 7	L					Left
	1HB76P01AA	1	2, 3, 6, 7	L					Right
3									MOLDING, Cab
	1HE95P01AA	1	3, 7	L	03, 05				Left
	1HE96P01AA	1	3, 7	L	03, 05				Right
4	68014789AA	AR	3, 7	L	03, 05				CLIP, Molding
5	68014794AA	AR	3, 7	L	03, 05				CLIP, Molding
6	06104633AA	2	3, 7	L	03, 05				SCREW
7	68010043AA	2	2, 3, 6, 7	L					WASHER

SPRINTER (VB)

SERIES	LINE	BODY	ENGINE	TRANSMISSION
L = LOWLINE	3 = HD DODGE 2WD 2 = Med. Duty DODGE 2WD	03 = CAB CHASSIS WHEEL BASE 3 05 = CAB CHASSIS WHEEL BASE 5 13 = 119 WB 53 = 119 WB 15 = VAN WHEEL BASE 5 55 = WAGON WHEEL BASE 5 17 = VAN WHEEL BASE 7	EG2 = 3.5L V6 Gas Engine EXM = 3.0L V6 Turbo Diesel Engine	DGZ = 5-Speed Auto W5A380 Transmission

AR = use ase required - = Non illustrrated part

<< RETURN TO GROUP INDEX

Moldings
Figure EVB-210

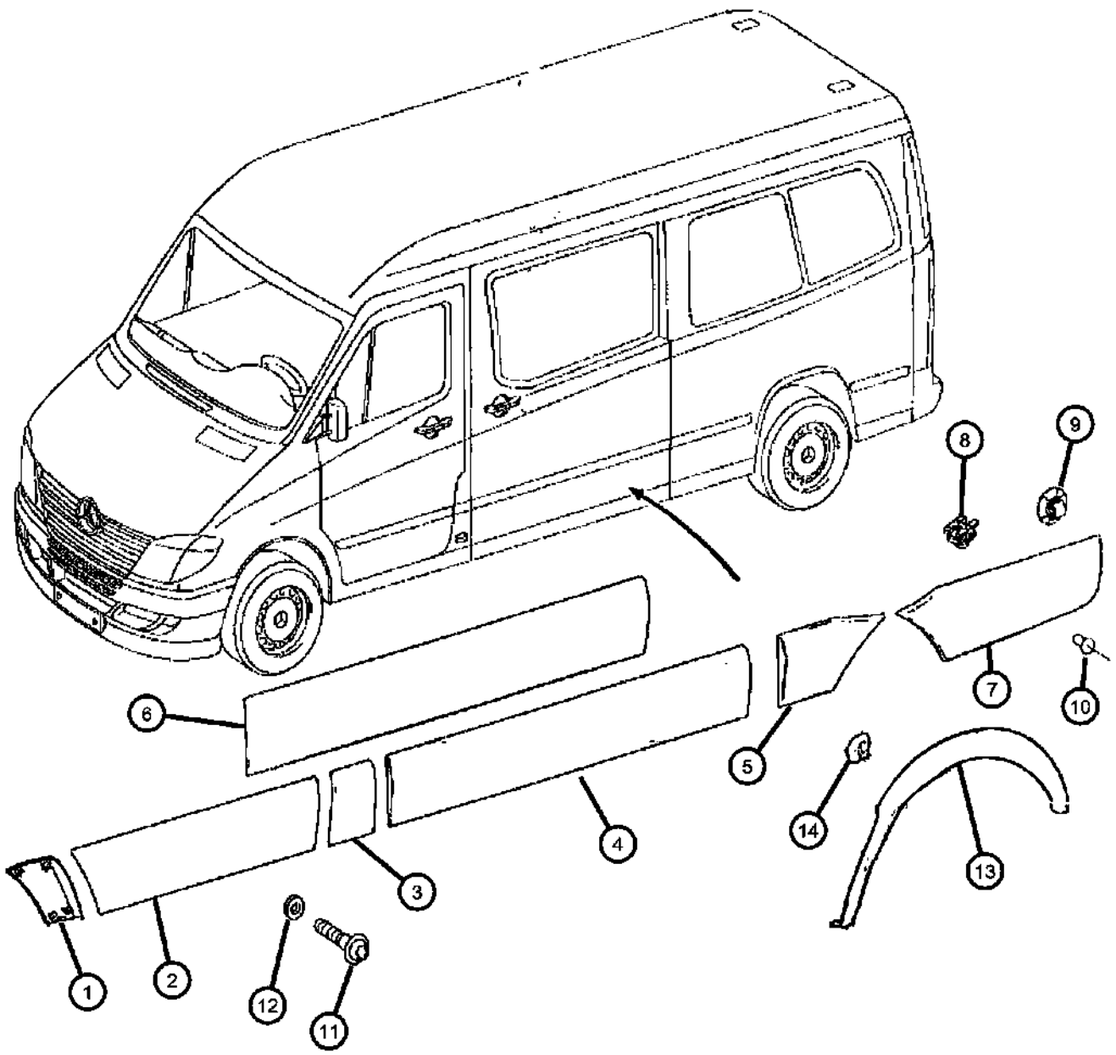

ITEM	PART NUMBER	QTY	LINE	SERIES	BODY	ENGINE	TRANS	TRIM	DESCRIPTION
1									MOLDING, Fender
	1HB77P01AA	1	2, 3, 6, 7	L					White, Right
	1HB77XDVAA	1	2, 3, 6, 7	L					Gray, Right
	1JD64P01AA	1	2, 3, 6, 7	L					White, Left
	1JD64XDVAA	1	2, 3, 6, 7	L					Gray, Left
2									MOLDING, Front Door
	1HB75P01AA	1	2, 3, 6, 7	L					White, Left
	1HB75XDVAA	1	2, 3, 6, 7	L					Gray, Left
	1HB76P01AA	1	7, 2, 3, 6	L					White, Right
	1HB76XDVAA	1	2, 3, 6, 7	L					Gray, Right
3									MOLDING, B-Pillar
	1HB78P01AA	1	2, 3, 6, 7	L	13, 15, 17, 53, 55				White, Left
	1HB78XDVAA	1	2, 3, 6, 7	L	13, 15, 17, 53, 55				Gray, Left
	1HB79P01AA	1	2, 3, 6, 7	L	13, 15, 17, 53, 55				White, Right
	1HB79XDVAA	1	2, 3, 6, 7	L	13, 15, 17, 53, 55				Gray, Right
4									MOLDING, Sliding Door
	1HB62P01AA	1	2, 3, 6, 7	L	13, 15, 17, 53, 55				White, Right
	1HB62XDVAA	1	2, 3, 6, 7	L	13, 15, 17, 53, 55				Gray, Right
	1HB80P01AA	1	2, 3, 6, 7	L	13, 15, 17, 53, 55				White, Left
	1HB80XDVAA	1	2, 3, 6, 7	L	13, 15, 17, 53, 55				Gray, Left
5									MOLDING, Body Side
	1HB81P01AA	1	6, 7, 2, 3	L	15, 17, 55				White, Left
	1HB81XDVAA	1	2, 3, 6, 7	L	15, 17, 55				Gray, Left
	1HB82P01AA	1	2, 3, 6, 7	L	15, 17, 55				White, Right
	1HB82XDVAA	1	2, 3, 6, 7	L	15, 17, 55				Gray, Right
	1HB83P01AA	1	2, 3, 6, 7	L	13, 53				White, Left
	1HB83XDVAA	1	2, 3, 6, 7	L	13, 53				Gray, Left
	1HB84P01AA	1	2, 3, 6, 7	L	13, 53				White, Right
	1HB84XDVAA	1	2, 3, 6, 7	L	13, 53				Gray, Right

SPRINTER (VB)

SERIES	LINE	BODY	ENGINE	TRANSMISSION
L = LOWLINE	3 = HD DODGE 2WD 2 = Med. Duty DODGE 2WD	03 = CAB CHASSIS WHEEL BASE 3 05 = CAB CHASSIS WHEEL BASE 5 13 = 119 WB 53 = 119 WB 15 = VAN WHEEL BASE 5 55 = WAGON WHEEL BASE 5 17 = VAN WHEEL BASE 7	EG2 = 3.5L V6 Gas Engine EXM = 3.0L V6 Turbo Diesel Engine	DGZ = 5-Speed Auto W5A380 Transmission

AR = use ase required - = Non illustrrated part

<< RETURN TO GROUP INDEX

Moldings
Figure EVB-210

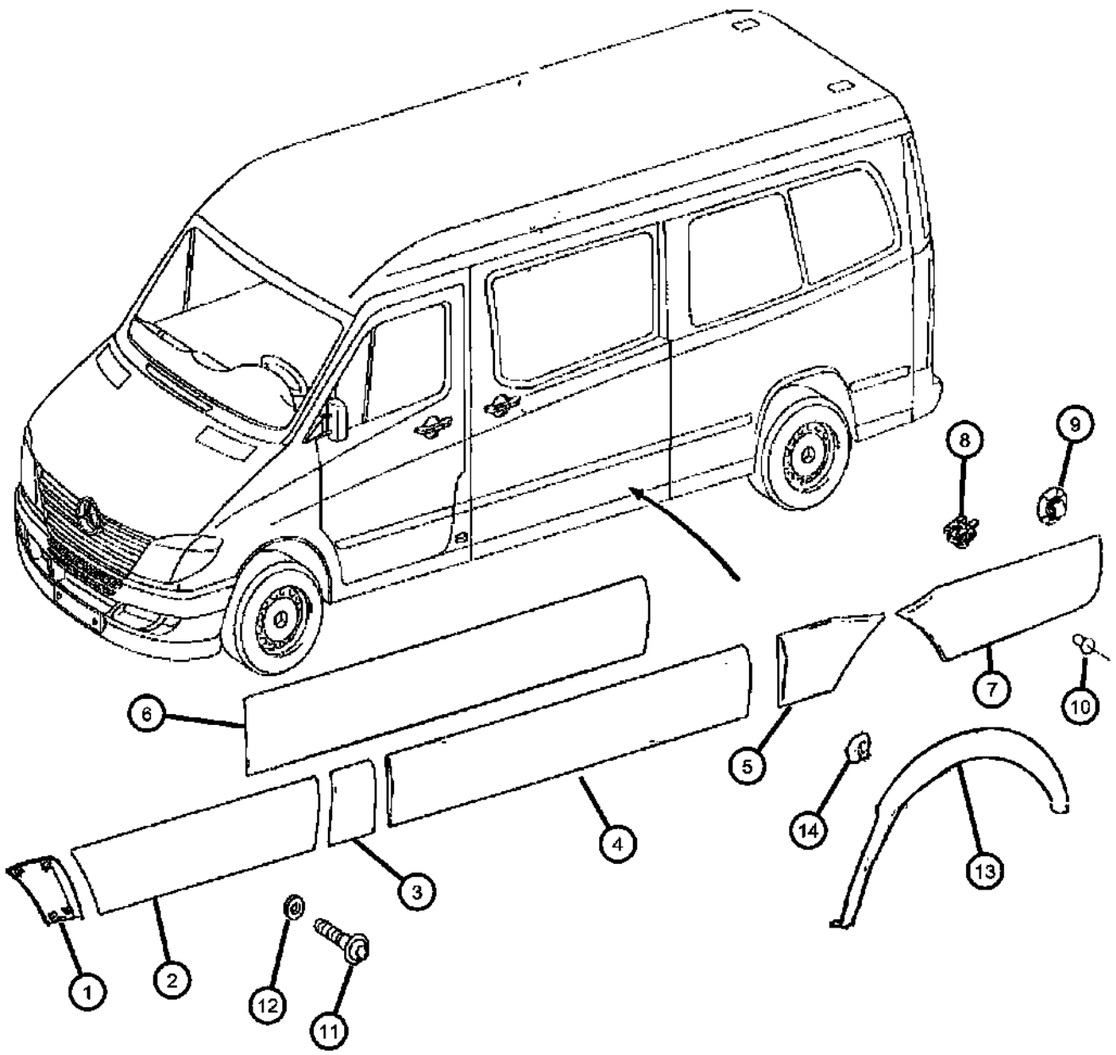

ITEM	PART NUMBER	QTY	LINE	SERIES	BODY	ENGINE	TRANS	TRIM	DESCRIPTION
6									MOLDING, Sliding Door
	1HB62P01AA	1	2, 3, 6, 7	L	13, 15, 17, 53, 55				White, Right
	1HB62XDVAA	1	2, 3, 6, 7	L	13, 15, 17, 53, 55				Gray, Right
	1HB80P01AA	1	2, 3, 6, 7	L	13, 15, 17, 53, 55				White, Left
	1HB80XDVAA	1	2, 3, 6, 7	L	13, 15, 17, 53, 55				Gray, Left
7									MOLDING, Body Side
	1HB85P01AA	1	2, 3, 6, 7	L	13, 53				White, Left
	1HB85XDVAA	1	2, 3, 6, 7	L	13, 53				Gray, Left
	1HB86P01AA	1	7, 2, 3, 6	L	13, 53				White, Right
	1HB86XDVAA	1	2, 3, 6, 7	L	13, 53				Gray, Right
	1HB87P01AA	1	2, 3, 6, 7	L	15, 55				White, Left
	1HB87XDVAA	1	2, 3, 6, 7	L	15, 55				Gray, Left
	1HB88P01AA	1	2, 3, 6, 7	L	15, 55				White, Right
	1HB88XDVAA	1	2, 3, 6, 7	L	15, 55				Gray, Right
	1HB89P01AA	1	2, 3, 6, 7	L	17				White, Left
	1HB89XDVAA	1	2, 3, 6, 7	L	17				Gray, Left
	1HB90P01AA	1	2, 3, 6, 7	L	17				White, Right
	1HB90XDVAA	1	2, 3, 6, 7	L	17				Gray, Right
8									CLIP, Molding
	68014789AA	AR	3, 7	L	03, 05				
		AR	2, 3, 6, 7	L	13, 15, 17, 53, 55				
9									CLIP, Molding
	68014794AA	AR	3, 7	L	03, 05				
		AR	2, 3, 6, 7	L	13, 15, 17, 53, 55				
10									RIVET, Plastic
	1AR96DX9AA	3	3, 7	L	03, 05				
		3	2, 3, 6, 7	L	13, 15, 17, 53, 55				
11	06104633AA	1	6, 7, 2, 3	L					SCREW

SPRINTER (VB)

SERIES	LINE	BODY	ENGINE	TRANSMISSION
L = LOWLINE	3 = HD DODGE 2WD 2 = Med. Duty DODGE 2WD	03 = CAB CHASSIS WHEEL BASE 3 05 = CAB CHASSIS WHEEL BASE 5 13 = 119 WB 53 = 119 WB 15 = VAN WHEEL BASE 5 55 = WAGON WHEEL BASE 5 17 = VAN WHEEL BASE 7	EG2 = 3.5L V6 Gas Engine EXM = 3.0L V6 Turbo Diesel Engine	DGZ = 5-Speed Auto W5A380 Transmission

AR = use ase required - = Non illustrrated part

<< RETURN TO GROUP INDEX

Moldings
Figure EVB-210

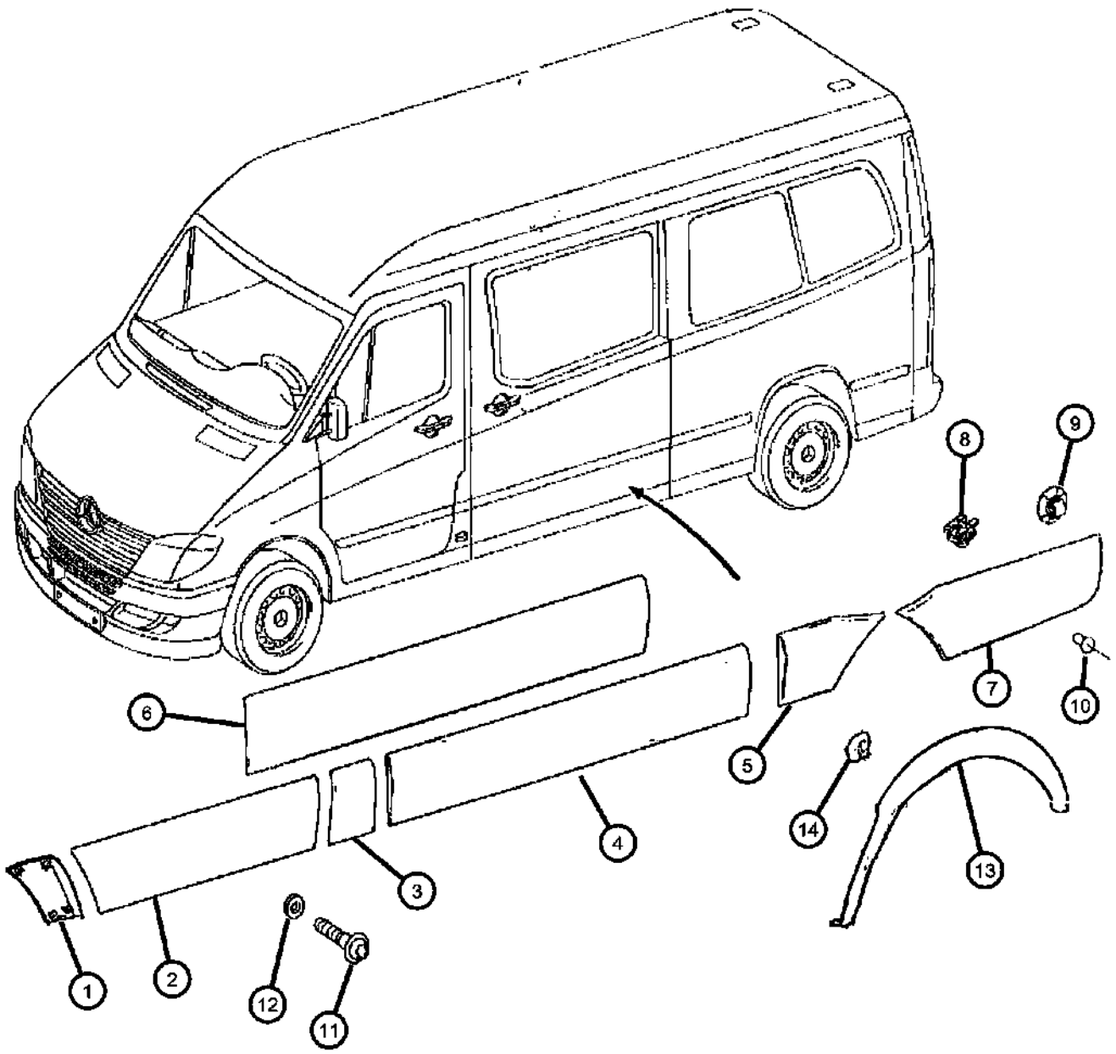

ITEM	PART NUMBER	QTY	LINE	SERIES	BODY	ENGINE	TRANS	TRIM	DESCRIPTION
12	68010043AA	2	2, 3, 6, 7	L					WASHER
13									MOLDING, Wheel Opening Flare
	1HE92XDVAA	1	2, 3, 6, 7	L	13, 15, 17, 53, 55				Right
	1HE93XDVAA	1	2, 3, 6, 7	L	13, 15, 17, 53, 55				Left
14	68014795AA	1	2, 3, 6, 7	L	13, 15, 17, 53, 55				CLIP

SPRINTER (VB)

SERIES	LINE	BODY	ENGINE	TRANSMISSION
L = LOWLINE	3 = HD DODGE 2WD 2 = Med. Duty DODGE 2WD	03 = CAB CHASSIS WHEEL BASE 3 05 = CAB CHASSIS WHEEL BASE 5 13 = 119 WB 53 = 119 WB 15 = VAN WHEEL BASE 5 55 = WAGON WHEEL BASE 5 17 = VAN WHEEL BASE 7	EG2 = 3.5L V6 Gas Engine EXM = 3.0L V6 Turbo Diesel Engine	DGZ = 5-Speed Auto W5A380 Transmission

Splash Guards
Figure EVB-220

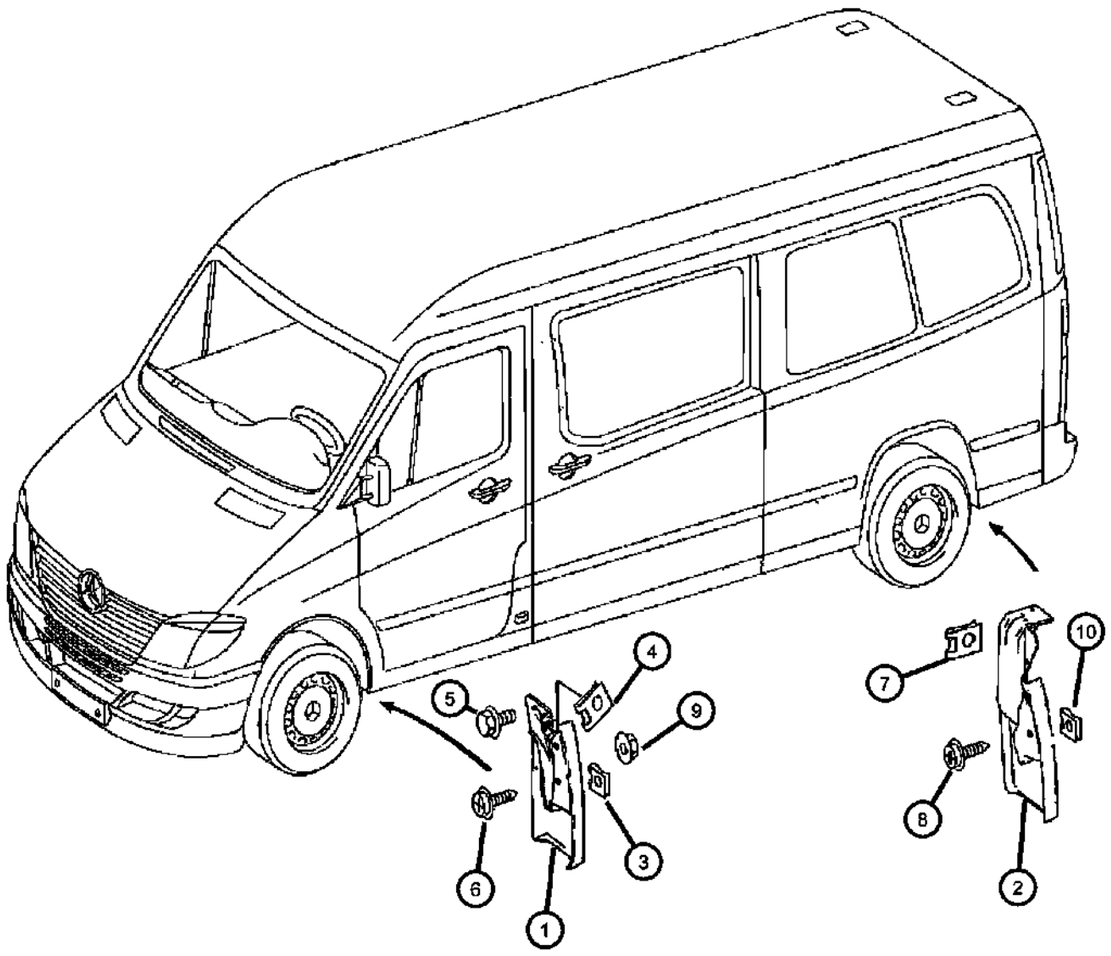

ITEM	PART NUMBER	QTY	LINE	SERIES	BODY	ENGINE	TRANS	TRIM	DESCRIPTION
1									GUARD, Splash
	1HE91DX9AA	1	2, 3, 6, 7	L					Right
	1HE90DX9AA	1	2, 3, 6, 7	L					Left
2									GUARD, Splash
	1HQ54DX9AA	1	2, 3, 6, 7	L	13, 15, 17, 53, 55				Right
	1HQ55DX9AA	1	2, 3, 6, 7	L	13, 15, 17, 53, 55				Left
3	06104737AA	4	2, 3, 6, 7	L	13, 15, 17, 53, 55				CLIP, CLIP-SPRING
4									CLIP, Spring
	06104735AA	4	2, 3, 6, 7	L	13, 15, 17, 53, 55				
		4	3, 7	L	03, 05				
5	06104635AA	2	6, 7, 2, 3	L	13, 15, 17, 53, 55				SCREW
6									SCREW, Tapping
	06104615AA	8	3, 7	L	03, 05				
		8	2, 3, 6, 7	L	13, 15, 17, 53, 55				
7	06104737AA	4	2, 3, 6, 7	L	13, 15, 17, 53, 55				CLIP, CLIP-SPRING
8									SCREW, Tapping
	06104615AA	8	3, 7	L	03, 05				
		8	2, 3, 6, 7	L	13, 15, 17, 53, 55				
9	68004878AA	4	2, 3, 6, 7	L	13, 15, 17, 53, 55				NUT
10	68004878AA	4							CLIP, (NOT SERVICED)

SPRINTER (VB)

SERIES	LINE	BODY	ENGINE	TRANSMISSION
L = LOWLINE	3 = HD DODGE 2WD 2 = Med. Duty DODGE 2WD	03 = CAB CHASSIS WHEEL BASE 3 05 = CAB CHASSIS WHEEL BASE 5 13 = 119 WB 53 = 119 WB 15 = VAN WHEEL BASE 5 55 = WAGON WHEEL BASE 5 17 = VAN WHEEL BASE 7	EG2 = 3.5L V6 Gas Engine EXM = 3.0L V6 Turbo Diesel Engine	DGZ = 5-Speed Auto W5A380 Transmission

Group - IVB

Interior Trim

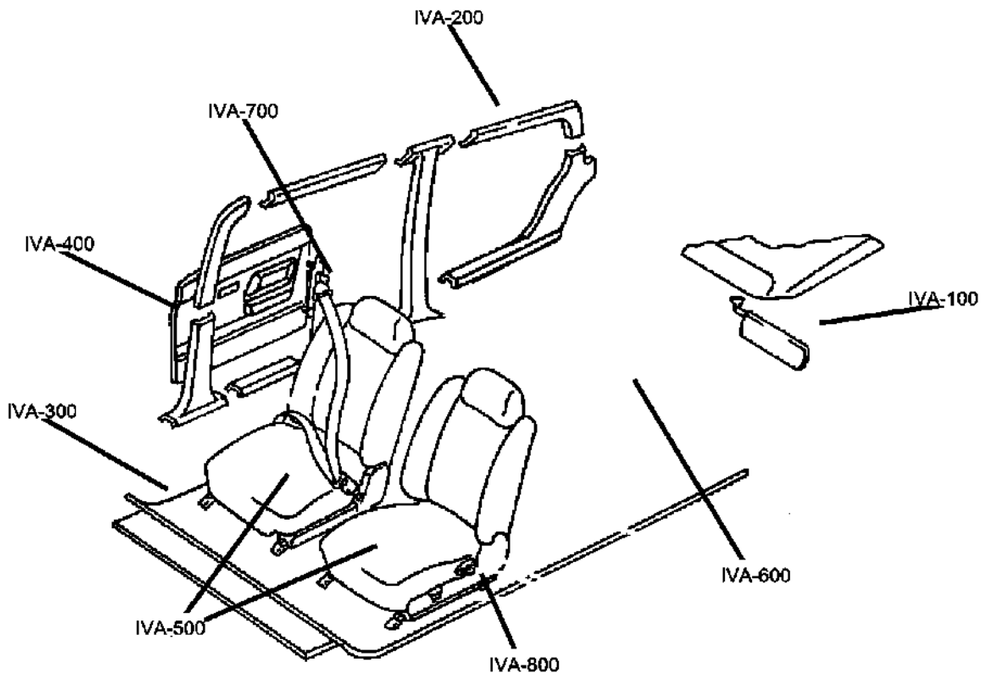

IVB-100 Headliner and Visor	**IVB-200** Moldings, Scuff Plates	**IVB-300** Carpet	**IVB-400** Door Trim Panels-Front and Sliding
IVB-500 Front Seats and Attaching Parts	**IVB-600** Rear Seats	**IVB-700** Seat Belts-Front and Rear	

Group - IVB Interior Trim

Illustration Title — Group-Fig. No.

Headliner and Visor
Sun Visor & Inside Mirror Cab Chassis ..... Fig. IVB - 105
Sun Visor & Inside Mirror ..... Fig. IVB - 110

Moldings, Scuff Plates
Inner Paneling in Cab ..... Fig. IVB - 205
Partition Paneling ..... Fig. IVB - 215
Inner Paneling Sidewall, Hard Fiber ..... Fig. IVB - 220
Inner Paneling Sidewall, Plastic ..... Fig. IVB - 225
Inner Paneling Sidewall, Fabric ..... Fig. IVB - 230
Inner Paneling Window-Pillar in Cab ..... Fig. IVB - 235
Inner Paneling, Roof, Low Roof ..... Fig. IVB - 240
Inner Paneling, Roof, High Roof ..... Fig. IVB - 245
Window Airbag/Head Side Airbag ..... Fig. IVB - 250
Cargo Retainers ..... Fig. IVB - 255
Partition Wall / Load Protection Grill ..... Fig. IVB - 260
Partition Wall with Slidding Door ..... Fig. IVB - 265

Carpet
Floor Lining, Entry Paneling & Footrest in Cab ..... Fig. IVB - 310
Floor Lining & Entry Paneling-Wooden Floor ..... Fig. IVB - 315

Door Trim Panels-Front and Sliding
Front Door Trim Panel ..... Fig. IVB - 410
Sliding Door Trim Panel ..... Fig. IVB - 420
Cargo Door Trim Panel ..... Fig. IVB - 430

Front Seats and Attaching Parts
Front Seat [A6] Orion Grey Medium ..... Fig. IVB - 510
Front Seat [E7] Art Grey ..... Fig. IVB - 515
Front Seat [F7] Black ..... Fig. IVB - 520
Passenger Front Dual Seat Sales Code [CW9], [A6] Orion Grey Medium ..... Fig. IVB - 525
Passenger Front Dual Seat Sales Code [CW9], [E7] Art Grey ..... Fig. IVB - 530
Passenger Front Dual Seat Sales Code [CW9], [F7] Black ..... Fig. IVB - 535
Passenger Front Jump Seat With Sales Code [CDT], [A6] Orion Grey Medium ..... Fig. IVB - 540
Passenger Front Jump Seat With Sales Code [CDT], [E7] Art Grey ..... Fig. IVB - 545
Passenger Front Jump Seat With Sales Code [CDT], [F7] Black ..... Fig. IVB - 550
Seat Box ..... Fig. IVB - 555

Rear Seats
Rear Seat- 2 Passenger ..... Fig. IVB - 610
Rear Seat- 3 Passenger ..... Fig. IVB - 620

Seat Belts-Front and Rear
Front Seat Belts ..... Fig. IVB - 710
Rear Seat Belts ..... Fig. IVB - 720

Sun Visor & Inside Mirror Cab Chassis
Figure IVB-105

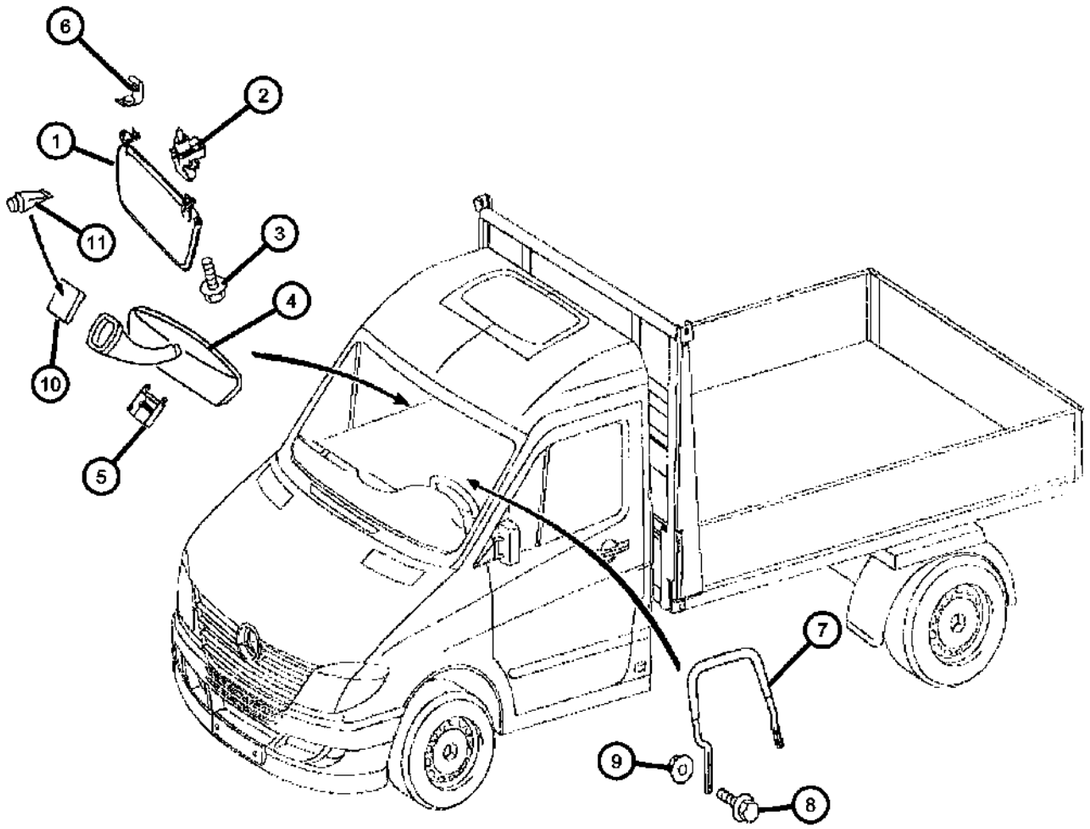

ITEM	PART NUMBER	QTY	LINE	SERIES	BODY	ENGINE	TRANS	TRIM	DESCRIPTION
1									VISOR
	1GY42KDVAA	1	2, 3, 6, 7	L				*A6	Left
		1	2, 3, 6, 7	L				*E7	Left
		1	2, 3, 6, 7	L				*F7	Left
	1GY43KDVAA	1	2, 3, 6, 7	L				*A6	Right
		1	2, 3, 6, 7	L				*E7	Right
		1	2, 3, 6, 7	L				*F7	Right
2									RETAINER, Visor
	1HQ43KD-VAA	2	2, 3, 6, 7	L				*E7	Right & Left
		2	2, 3, 6, 7	L				*F7	Right & Left
		2	7, 2, 3, 6	L				*A6	Right & Left
3	68014329AA	4	2, 3, 6, 7	L					SCREW, [M6x25]
4									MIRROR, Inside Rear View
	05104435AA	1	2, 3, 6, 7	L					With [GNA] Without [NHW]
	68017272AA	1	2, 3, 6, 7	L					With [GNA + NHW]
5	68017273AA	1	2, 3, 6, 7	L					COVER
6									CLIP, Visor
	1HB00XDVAA	2	2, 3, 6, 7	L				*A6	
		2	2, 3, 6, 7	L				*E7	
		2	2, 3, 6, 7	L				*F7	
7									RETAINER
	1HE41DX9AA	1	2, 3, 6, 7	L				*A6	With [CSV], Left
		1	3, 6, 7, 2	L				*E7	With [CSV], Left
	1HE85DX9AA	1	3, 7	L	03, 05			*F7	With [CSV], Right
		1	2, 3, 6, 7	L				*F7	With [CSV], Left
		1	3, 7	L	03, 05			*A6	With [CSV], Right
		1	3, 7	L	03, 05			*E7	With [CSV], Right
8	06104157AB	3	3, 7	L	03, 05				BOLT, Torx Head, M8x1.25x35.00
9	06105169AA	2	3, 7	L	03, 05				NUT, [M8]
10	05104241AA	1	3, 7	L	03, 05				BUTTON, Rear View Mirror
11	05125662AB	1	2, 3, 6, 7	L					ADHESIVE

SPRINTER (VB)

SERIES	LINE	BODY	ENGINE	TRANSMISSION
L = LOWLINE	3 = HD DODGE 2WD 2 = Med. Duty DODGE 2WD	03 = CAB CHASSIS WHEEL BASE 3 05 = CAB CHASSIS WHEEL BASE 5 13 = 119 WB 53 = 119 WB 15 = VAN WHEEL BASE 5 55 = WAGON WHEEL BASE 5 17 = VAN WHEEL BASE 7	EG2 = 3.5L V6 Gas Engine EXM = 3.0L V6 Turbo Diesel Engine	DGZ = 5-Speed Auto W5A380 Transmission

AR = use ase required - = Non illustrrated part

<< RETURN TO GROUP INDEX

Sun Visor & Inside Mirror
Figure IVB-110

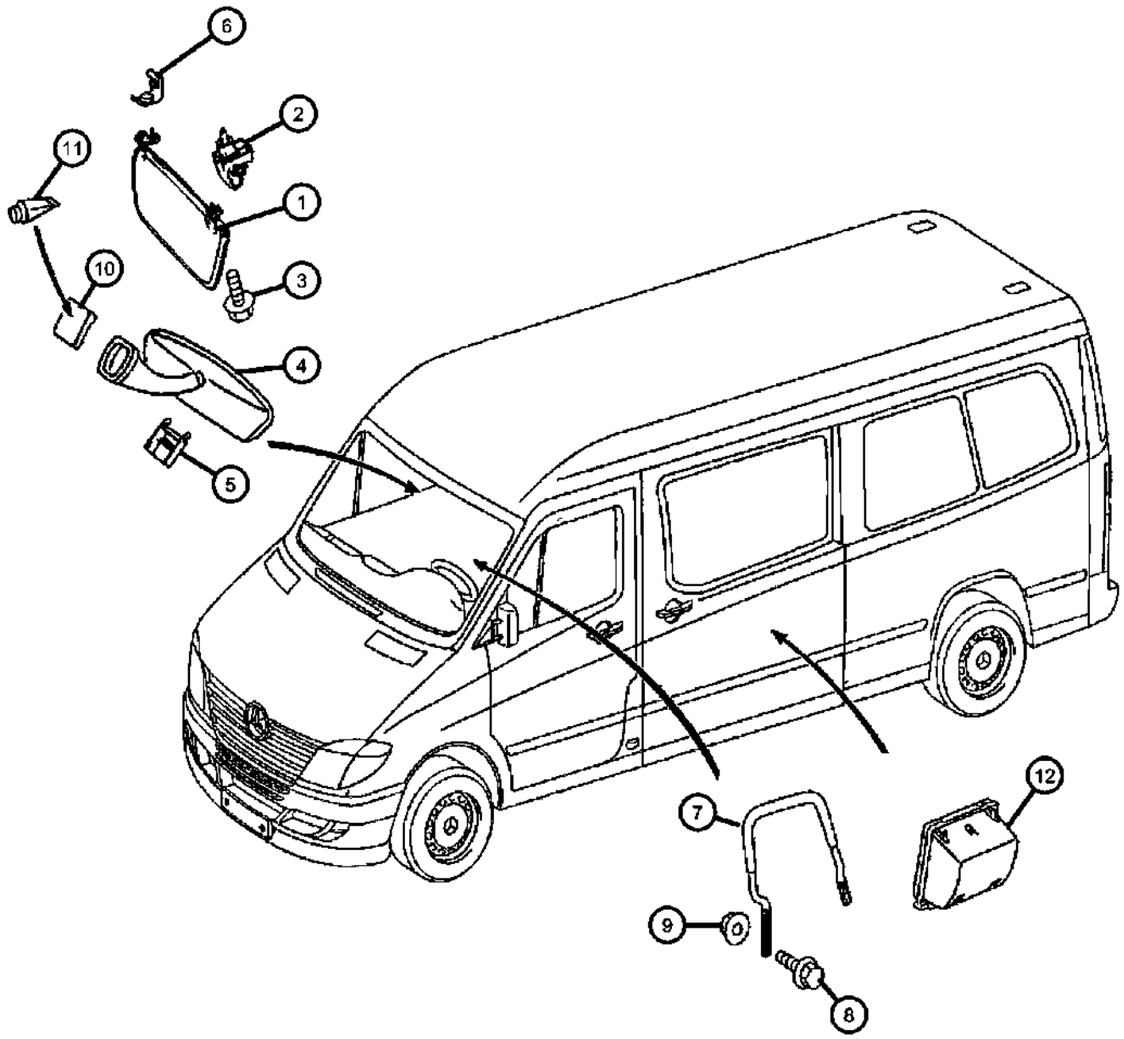

ITEM	PART NUMBER	QTY	LINE	SERIES	BODY	ENGINE	TRANS	TRIM	DESCRIPTION
1									VISOR
	1GY42KDVAA	1	2, 3, 6, 7	L				*A6	
		1	2, 3, 6, 7	L				*E7	
		1	2, 3, 6, 7	L				*F7	
2	1HQ43KD-VAA	2	2, 3, 6, 7	L				*E7	RETAINER, Visor
3	68014329AA	4	2, 3, 6, 7	L					SCREW
4									MIRROR, Inside Rear View
	05104435AA	1	2, 3, 6, 7	L					With [GNA] Day/Night Mirror
	68017272AA	1	2, 3, 6, 7	L					With [NHW] Light and Rain Sensor
5	68017273AA	1	2, 3, 6, 7	L					COVER
6	1HB00XDVAA	2	2, 3, 6, 7	L				*A6	CLIP, VisorRight & Left
7									RETAINER, Interior Double Seat Assist Handle
	1HE41DX9AA	1	2, 3, 6, 7	L				*A6	[A6]
		1	2, 3, 6, 7	L				*E7	[E7]
		1	2, 3, 6, 7	L				*F7	[F7]
8	06104157AB	3	2, 3, 6, 7	L	13, 15, 17, 53, 55				BOLT, Torx Head, M8x1.25x35.00
9	06105169AA	3	2, 3, 6, 7	L					NUT
10	05104241AA	1	2, 3, 6, 7	L	17, 53, 55, 13, 15				BUTTON, Rear View Mirror
11	05073862AA	2	2, 3, 6, 7	L					ADHESIVE
12	05124222AA	2	2, 6	L	53, 55				ASHTRAY

SPRINTER (VB)

SERIES	LINE	BODY	ENGINE	TRANSMISSION
L = LOWLINE	3 = HD DODGE 2WD 2 = Med. Duty DODGE 2WD	03 = CAB CHASSIS WHEEL BASE 3 05 = CAB CHASSIS WHEEL BASE 5 13 = 119 WB 53 = 119 WB 15 = VAN WHEEL BASE 5 55 = WAGON WHEEL BASE 5 17 = VAN WHEEL BASE 7	EG2 = 3.5L V6 Gas Engine EXM = 3.0L V6 Turbo Diesel Engine	DGZ = 5-Speed Auto W5A380 Transmission

AR = use ase required - = Non illustrrated part

<< RETURN TO GROUP INDEX

Inner Paneling in Cab
Figure IVB-205

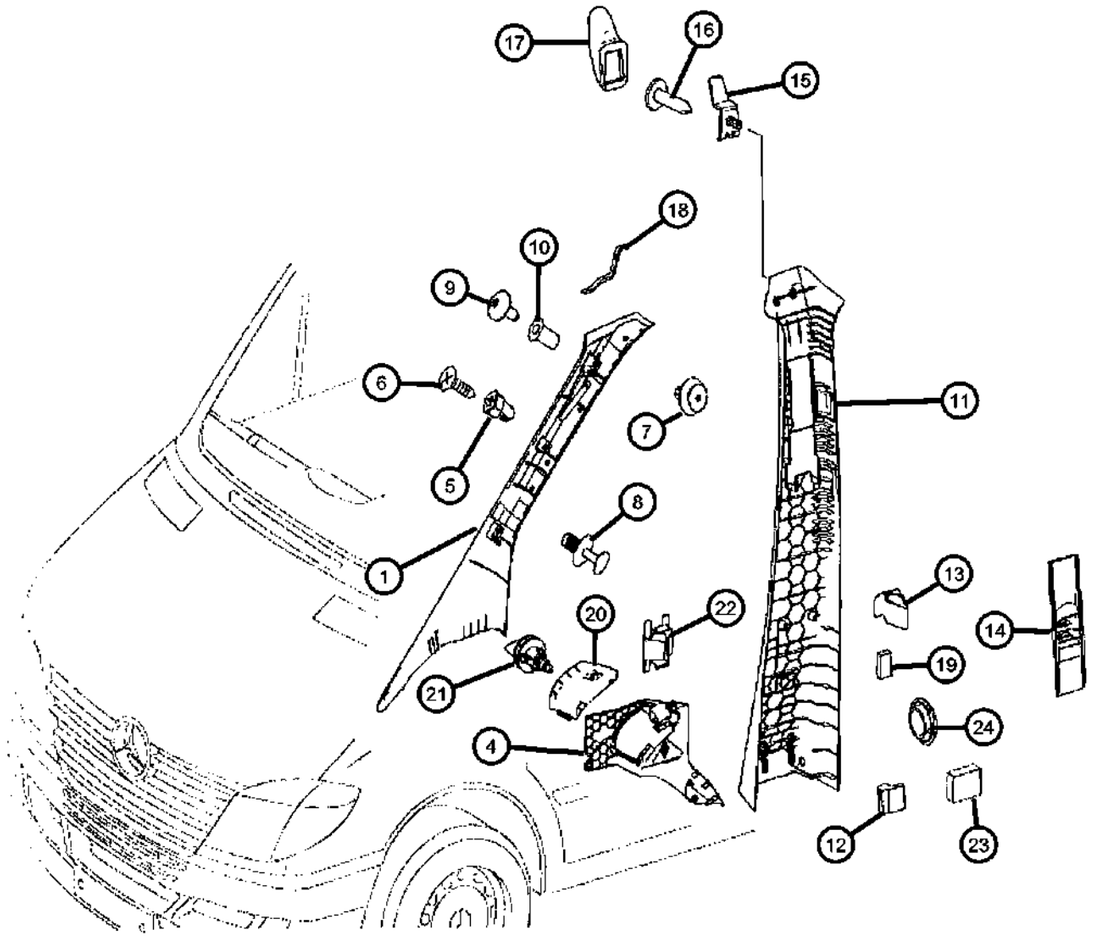

ITEM	PART NUMBER	QTY	LINE	SERIES	BODY	ENGINE	TRANS	TRIM	DESCRIPTION
1	1JZ46NCVAA	1	2, 3, 6, 7	L					PANEL, A Pillar, Without [CJ4], Left
-2	1MS97NC-VAA	1	3, 7	L	03, 05, 13, 15, 17				PANEL, A Pillar Trim, Without [CJ4], Right
-3									MOLDING, A-PILLAR
	1HB04XDVAA	1	2, 3, 6, 7	L				*A6	With [CJ4], Right
		1	2, 3, 6, 7	L				*E7	With [CJ4], Right
		1	2, 3, 6, 7	L				*F7	With [CJ4], Right
	1HB05XDVAA	1	2, 3, 6, 7	L				*A6	With [CJ4], Left
		1	2, 3, 6, 7	L				*E7	With [CJ4], Left
		1	2, 3, 6, 7	L				*F7	With [CJ4], Left
4									PANEL
	1HA85XDVAA	1	2, 3, 6, 7	L				*A6	Left
		1	2, 3, 6, 7	L				*E7	Left
		1	2, 3, 6, 7	L				*F7	Left
	1HA87XDVAA	1	2, 3, 6, 7	L				*A6	Right
		1	2, 3, 6, 7	L				*E7	Right
		1	2, 3, 6, 7	L				*F7	Right
5	05098837AB	1	3, 7	L	03, 05				NUT, Plastic Snap-inRight & Left
6	06104574AA	1	2, 3, 6, 7	L					SCREW, Tapping, [4.8 x 16 MM], Right & Left
7	68006504AA	3	2, 3, 6, 7	L					RETAINERUpper
8									RIVET, Plastic
	1AR96DX9AA	3	3, 7	L	03, 05			*A6	Lower
		3	3, 7	L	03, 05			*E7	Lower
		3	3, 7	L	03, 05			*F7	Lower
9	68014337AA	8	2, 3, 6, 7	L					SCREW, [M6x16], Upper
10	05133486AA	4	2, 3, 6, 7	L					RIVET
11									PANEL, B Pillar
	1HB06XDVAA	1	3, 7	L	03, 05			*A6	Left
		1	3, 7	L	03, 05			*E7	Left
		1	3, 7	L	03, 05			*F7	Left
	1HB07NCVAA	1	3, 7	L	03, 05				Right
12	68030968AA	1	2, 3, 6, 7	L	03, 05, 13, 15, 17				INSULATOR

SPRINTER (VB)

SERIES	LINE	BODY	ENGINE	TRANSMISSION
L = LOWLINE	3 = HD DODGE 2WD 2 = Med. Duty DODGE 2WD	03 = CAB CHASSIS WHEEL BASE 3 05 = CAB CHASSIS WHEEL BASE 5 13 = 119 WB 53 = 119 WB 15 = VAN WHEEL BASE 5 55 = WAGON WHEEL BASE 5 17 = VAN WHEEL BASE 7	EG2 = 3.5L V6 Gas Engine EXM = 3.0L V6 Turbo Diesel Engine	DGZ = 5-Speed Auto W5A380 Transmission

Inner Paneling in Cab
Figure IVB-205

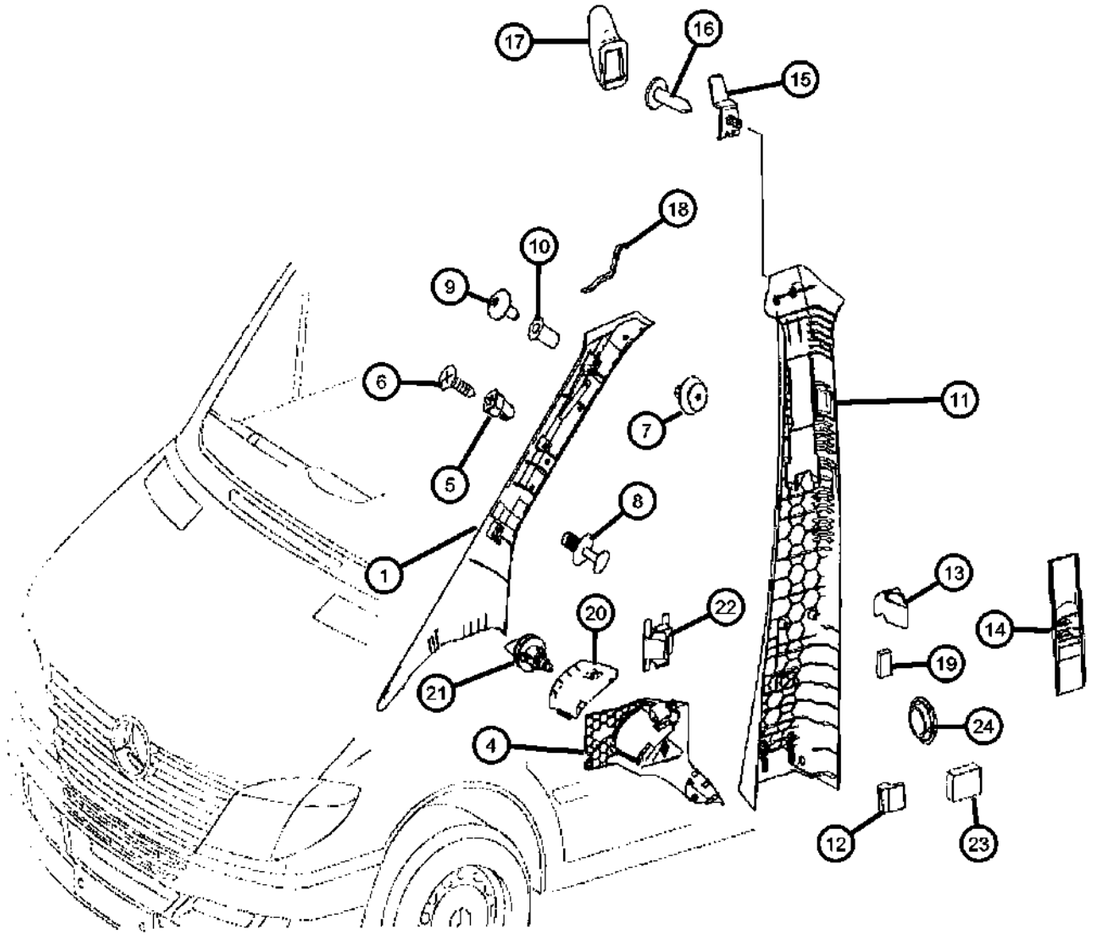

ITEM	PART NUMBER	QTY	LINE	SERIES	BODY	ENGINE	TRANS	TRIM	DESCRIPTION
13	68014360AA	4	2, 3, 6, 7	L					CLAMP
14									PANEL, B Pillar
	68014362AA	1	2, 3, 6, 7	L					Right
	68014363AA	1	2, 3, 6, 7	L					Left
15	05124273AA	1	3, 7	L	03, 05				HOOK, Coat
16	06104575AA	1	3, 7	L	03, 05				SCREW, Tapping, M4.8X1.6X19.0
17	0ZF49CS8AA	1	2, 3, 6, 7	L					HOOK, Coat
18	68012811AA	2	7, 2, 3, 6	L					SEAL
19	68010773AA	3	3, 7	L	03, 05				INSULATION
20	1HA86NCVAA	1	2, 3, 6, 7	L					COVER
21	68014164AA	1	2, 3, 6, 7	L					RETAINER
22	68014165AA	1	2, 3, 6, 7	L					RETAINER
23	68014291AA	1	3, 7	L	03, 05				INSULATOR
24	68006359AA	2	3, 7	L	03, 05				PLUG, Body

SPRINTER (VB)

SERIES	LINE	BODY	ENGINE	TRANSMISSION
L = LOWLINE	3 = HD DODGE 2WD 2 = Med. Duty DODGE 2WD	03 = CAB CHASSIS WHEEL BASE 3 05 = CAB CHASSIS WHEEL BASE 5 13 = 119 WB 53 = 119 WB 15 = VAN WHEEL BASE 5 55 = WAGON WHEEL BASE 5 17 = VAN WHEEL BASE 7	EG2 = 3.5L V6 Gas Engine EXM = 3.0L V6 Turbo Diesel Engine	DGZ = 5-Speed Auto W5A380 Transmission

AR = use ase required - = Non illustrrated part

Partition Paneling
Figure IVB-215

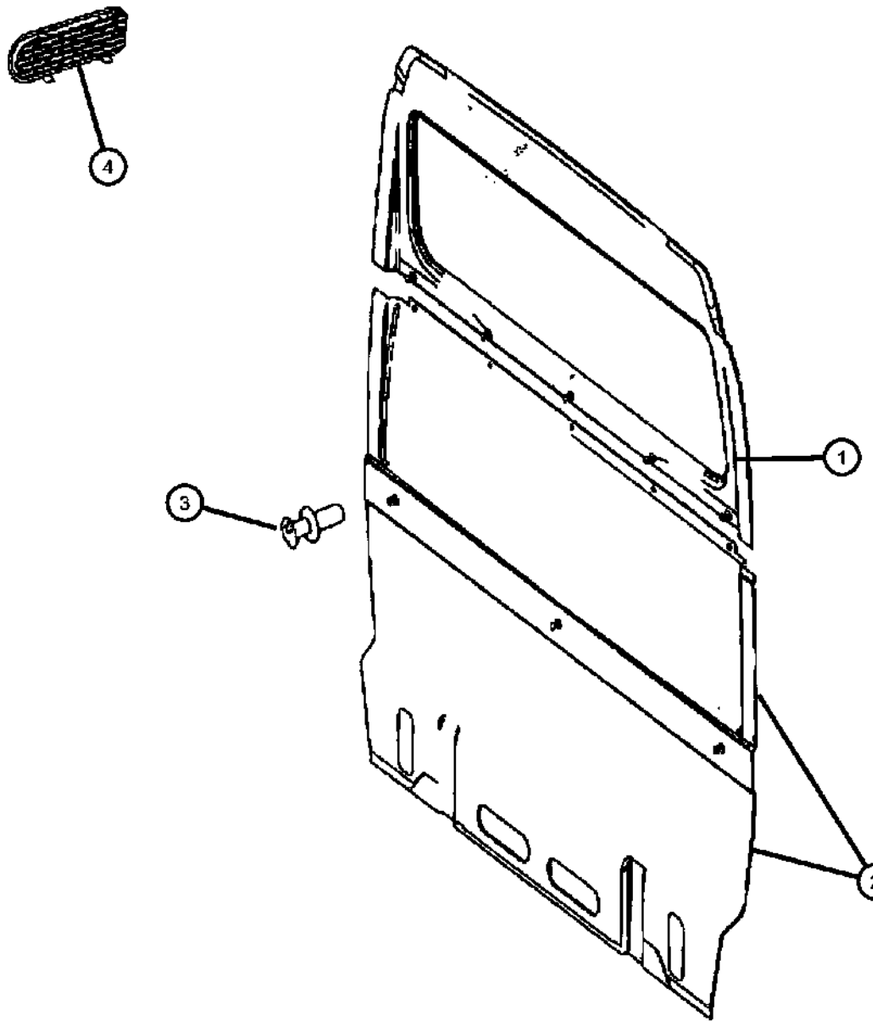

ITEM	PART NUMBER	QTY	LINE	SERIES	BODY	ENGINE	TRANS	TRIM	DESCRIPTION
1									PANEL, Cab Back Trim
	1HD62ADVAA	1	2, 3, 6, 7	L	13, 15, 17			*E7	With [XJW] Cargo Partition With Windows, With [CBJ] Inner Paneling, Inner Equipment
		1	2, 3, 6, 7	L	13, 15, 17			*F7	With [XJW] Cargo Partition With Windows, With [CBJ] Inner Paneling, Inner Equipment
	1HD63XDVAA	1	2, 3, 6, 7	L	13, 15, 17			*A6	With [CWC] Cargo Partition, With [CBJ] Inner Paneling, Inner Equipment
		1	2, 3, 6, 7	L	13, 15, 17			*E7	With [CWC] Cargo Partition, With [CBJ] Inner Paneling, Inner Equipment
		1	2, 3, 6, 7	L	13, 15, 17			*F7	With [CWC] Cargo Partition, With [CBJ] Inner Paneling, Inner Equipment
		1	2, 3, 6, 7	L	13, 15, 17			*A6	With [XJW] Cargo Partition With Windows, With [CBJ] Inner Paneling, Inner Equipment
	1HD64ADVAA	1	2, 3, 6, 7	L	13, 15, 17			*F7	With [MWJ] Hight Roof, With [XJW] Cargo Partition With Windows, With [CBJ] Inner Paneling, Inner Equipment
		1	2, 3, 6, 7	L	13, 15, 17			*A6	With [MWJ] Hight Roof, With [XJW] Cargo Partition With Windows, With [CBJ] Inner Paneling, Inner Equipment
		1	2, 3, 6, 7	L	13, 15, 17			*E7	With [MWJ] Hight Roof, With [XJW] Cargo Partition With Windows, With [CBJ] Inner Paneling, Inner Equipment
	1HD65ADVAA	1	2, 3, 6, 7	L	13, 15, 17			*A6	With [MWJ] High Roof, With [CWC] Cargo Partition, With [CBJ] Inner Panneling, Inner Equipment
		1	2, 3, 6, 7	L	13, 15, 17			*E7	With [MWJ] High Roof, With [CWC] Cargo Partition, With [CBJ] Inner Panneling, Inner Equipment
		1	2, 3, 6, 7	L	17, 13, 15			*F7	With [MWJ] High Roof, With [CWC] Cargo Partition, With [CBJ] Inner Panneling, Inner Equipment
2									PANEL, Cab Back Trim

SPRINTER (VB)

SERIES	LINE	BODY	ENGINE	TRANSMISSION
L = LOWLINE	3 = HD DODGE 2WD 2 = Med. Duty DODGE 2WD	03 = CAB CHASSIS WHEEL BASE 3 05 = CAB CHASSIS WHEEL BASE 5 13 = 119 WB 53 = 119 WB 15 = VAN WHEEL BASE 5 55 = WAGON WHEEL BASE 5 17 = VAN WHEEL BASE 7	EG2 = 3.5L V6 Gas Engine EXM = 3.0L V6 Turbo Diesel Engine	DGZ = 5-Speed Auto W5A380 Transmission

Partition Paneling
Figure IVB-215

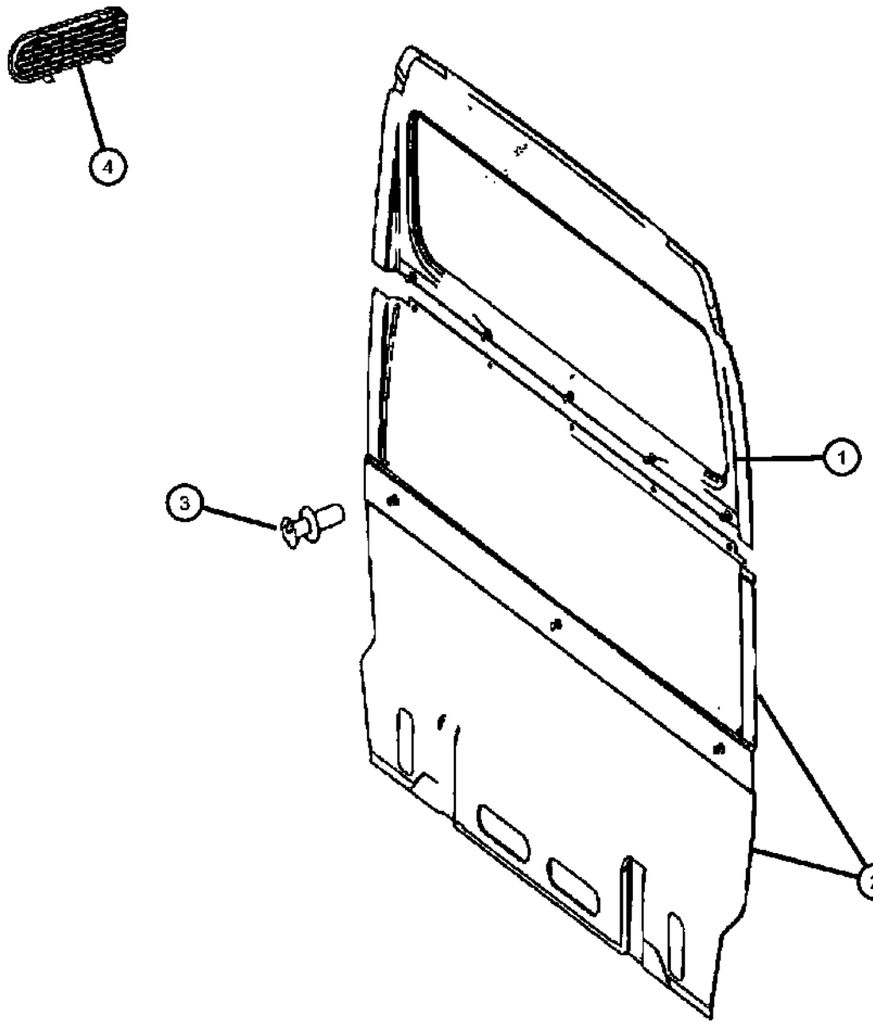

ITEM	PART NUMBER	QTY	LINE	SERIES	BODY	ENGINE	TRANS	TRIM	DESCRIPTION
	1HD66ADVAA	1	2, 3, 6, 7	L	03, 05, 13, 15, 17			*A6	[A6]
		1	2, 3, 6, 7	L	03, 05, 13, 15, 17			*E7	[E7]
		1	2, 3, 6, 7	L	03, 05, 13, 15, 17			*F7	[F7]
3									RIVET
	05174538AB	8	3, 7	L	03, 05			*A6	[A6]
		8	3, 7	L	03, 05			*E7	[E7]
		8	3, 7	L	03, 05			*F7	[F7]
		8	2, 3, 6, 7	L	13, 15, 17, 53, 55			*A6	[A6]
		8	2, 3, 6, 7	L	13, 15, 17, 53, 55			*E7	[E7]
		8	2, 3, 6, 7	L	13, 15, 17, 53, 55			*F7	[F7]
4	05123426AA	2	2, 3, 6, 7	L	13, 15, 17				EXHAUSTER, Quarter Panel

SPRINTER (VB)

SERIES	LINE	BODY	ENGINE	TRANSMISSION
L = LOWLINE	3 = HD DODGE 2WD 2 = Med. Duty DODGE 2WD	03 = CAB CHASSIS WHEEL BASE 3 05 = CAB CHASSIS WHEEL BASE 5 13 = 119 WB 53 = 119 WB 15 = VAN WHEEL BASE 5 55 = WAGON WHEEL BASE 5 17 = VAN WHEEL BASE 7	EG2 = 3.5L V6 Gas Engine EXM = 3.0L V6 Turbo Diesel Engine	DGZ = 5-Speed Auto W5A380 Transmission

Inner Paneling Sidewall, Hard Fiber
Figure IVB-220

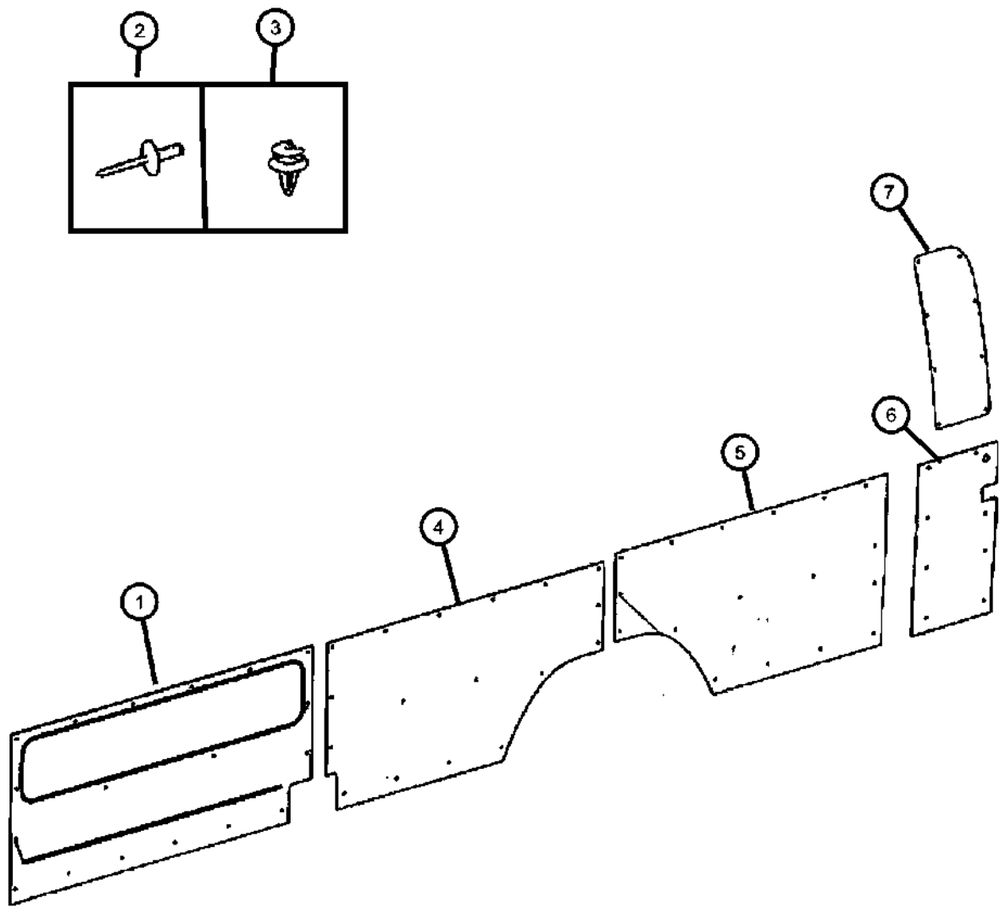

ITEM	PART NUMBER	QTY	LINE	SERIES	BODY	ENGINE	TRANS	TRIM	DESCRIPTION
1									PANEL, Side Trim
	1HD28XDVAA	1	2, 3, 6, 7	L	13, 15, 17			*E7	[E7] With [CMG] Cargo Area to Belt Paneling, Right
		1	2, 3, 6, 7	L	17, 13, 15			*F7	[F7] With [CMG] Cargo Area to Belt Paneling, Right
	1HD29XDVAA	1	2, 3, 6, 7	L	13, 15, 17			*A6	[A6] With [CMG] Cargo Area to Belt Paneling, Left
		1	2, 3, 6, 7	L	13, 15, 17			*E7	[E7] With [CMG] Cargo Area to Belt Paneling, Left
		1	2, 3, 6, 7	L	13, 15, 17			*F7	[F7] With [CMG] Cargo Area to Belt Paneling, Left
		1	2, 3, 6, 7	L	13, 15, 17			*A6	[A6] With [CMG] Cargo Area to Belt Paneling, Right
2	68006483AA	9	2, 3, 6, 7	L	13, 15, 17, 53, 55				RIVET
3	68005152AA	12	2, 3, 6, 7	L	13, 15, 17, 53, 55				FASTENER
4									PANEL, Side Trim
	1HB67XDVAA	1	2, 3, 6, 7	L	15, 17, 55			*A6	[A6] With [CMP]
		1	2, 3, 6, 7	L	15, 17, 55			*E7	[E7] With [CMP]
		1	2, 3, 6, 7	L	15, 17, 55			*F7	[F7] With [CMP]
	1HD31NC-VAA	1	2, 3, 6, 7	L	13, 15, 17, 53, 55			*AL	[A6] With [CMP], [5CF] and [CV9]
	1HD33XDVAA	1	2, 3, 6, 7	L	13			*A6	[A6] With [CMP]
		1	2, 3, 6, 7	L	13			*E7	[E7] With [CMP]
		1	2, 3, 6, 7	L	13			*F7	[F7] With [CMP]
	1HD37XDVAA	1	2, 3, 6, 7	L	13, 53			*A6	[A6] With [CMG]
		1	2, 3, 6, 7	L	53, 55, 13, 15, 17			*E7	[E7] With [CMP], [5CF] and [CV9]
		1	2, 3, 6, 7	L	13, 15, 17, 53, 55			*F7	[F7] With [CMP], [5CF] and [CV9]
	1HD39NC-VAA	1	2, 3, 6, 7	L	15, 17, 55			*F7	[F7] With [5CG or 5CK] With [CMP] and [CV9]
	1HD44XDVAA	1	2, 3, 6, 7	L	15, 17, 55			*A6	[A6] With [5CG or 5CK] With [CMG]
		1	2, 3, 6, 7	L	15, 17, 55			*E7	[A6] With [5CG or 5CK] With [CMG]
		1	2, 3, 6, 7	L	13, 53			*E7	[E7] With [CMG]
		1	2, 3, 6, 7	L	13, 53			*F7	[F7] With [CMG]
		1	2, 3, 6, 7	L	15, 17, 55			*A6	[A6] With [5CG or 5CK] With [CMP] and [CV9]

SPRINTER (VB)

SERIES	LINE	BODY	ENGINE	TRANSMISSION
L = LOWLINE	3 = HD DODGE 2WD 2 = Med. Duty DODGE 2WD	03 = CAB CHASSIS WHEEL BASE 3 05 = CAB CHASSIS WHEEL BASE 5 13 = 119 WB 53 = 119 WB 15 = VAN WHEEL BASE 5 55 = WAGON WHEEL BASE 5 17 = VAN WHEEL BASE 7	EG2 = 3.5L V6 Gas Engine EXM = 3.0L V6 Turbo Diesel Engine	DGZ = 5-Speed Auto W5A380 Transmission

Inner Paneling Sidewall, Hard Fiber
Figure IVB-220

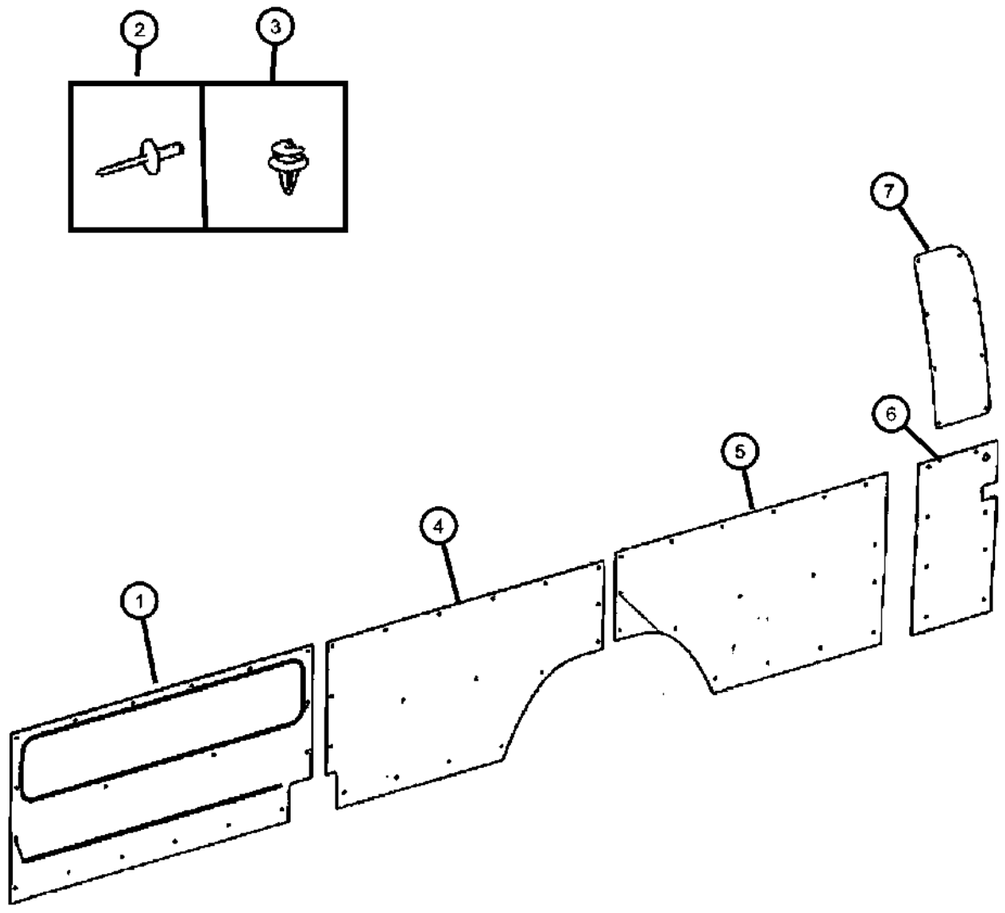

ITEM	PART NUMBER	QTY	LINE	SERIES	BODY	ENGINE	TRANS	TRIM	DESCRIPTION
		1	2, 3, 6, 7	L	15, 17, 55			*E7	[E7] With [5CG or 5CK] With [CMP] and [CV9]
		1	2, 3, 6, 7	L	15, 17, 55			*F7	[A6] With [5CG or 5CK] With [CMG]
5									PANEL, Side Trim
	1HD50XDVAA	1	2, 3, 6, 7	L	17			*E7	[E7] With [CMG]
		1	2, 3, 6, 7	L	17			*F7	[F7] With [CMG]
	1HB70XDVAA	1	2, 3, 6, 7	L	17			*A6	[A6] With [CMP]
		1	2, 3, 6, 7	L	17			*E7	[E7] With [CMP]
		1	2, 3, 6, 7	L	17			*F7	[F7] With [CMP]
		1	2, 3, 6, 7	L	17			*A6	[A6] With [CMG]
6									PANEL, Side Trim
	1HD55XDVAA	1	2, 3, 6, 7	L	17			*F7	[F7] With [5CK], Left
	1HD54XDVAA	1	2, 3, 6, 7	L	17			*A6	[A6] With [5CK], Right
		1	2, 3, 6, 7	L	17			*E7	[E7] With [5CK], Right
		1	2, 3, 6, 7	L	17			*F7	[F7] With [5CK], Right
		1	2, 3, 6, 7	L	17			*A6	[A6] With [5CK], Left
		1	2, 3, 6, 7	L	17			*E7	[E7] With [5CK], Left
	1HD56XDVAA	1	2, 3, 6, 7	L	17			*A6	[A6] With [CMG], Right
		1	2, 3, 6, 7	L	17			*E7	[E7] With [CMG], Right
		1	2, 3, 6, 7	L	17			*F7	[F7] With [CMG], Right
	1HD57XDVAA	1	2, 3, 6, 7	L	17			*A6	[A6] With [CMG], Left
		1	2, 3, 6, 7	L	17			*E7	[E7] With [CMG], Left
		1	2, 3, 6, 7	L	17			*F7	[F7] With [CMG], Left
7									PANEL, Side Trim
	1HD58XDVAA	1	2, 3, 6, 7	L	17			*A6	[A6] With [5CK], Right
		1	2, 3, 6, 7	L	17			*E7	[E7] With [5CK], Right
		1	2, 3, 6, 7	L	17			*F7	[F7] With [5CK], Right
	1HD59XDVAA	1	2, 3, 6, 7	L	17			*A6	[A6] With [5CK], Left
		1	2, 3, 6, 7	L	17			*E7	[E7] With [5CK], Left
		1	2, 3, 6, 7	L	17			*F7	[F7] With [5CK], Left
	1HD60XDVAA	1	2, 3, 6, 7	L	17			*A6	[A6] With [CMG], Right
		1	2, 3, 6, 7	L	17			*E7	[E7] With [CMG], Right

SPRINTER (VB)

SERIES	LINE	BODY	ENGINE	TRANSMISSION
L = LOWLINE	3 = HD DODGE 2WD 2 = Med. Duty DODGE 2WD	03 = CAB CHASSIS WHEEL BASE 3 05 = CAB CHASSIS WHEEL BASE 5 13 = 119 WB 53 = 119 WB 15 = VAN WHEEL BASE 5 55 = WAGON WHEEL BASE 5 17 = VAN WHEEL BASE 7	EG2 = 3.5L V6 Gas Engine EXM = 3.0L V6 Turbo Diesel Engine	DGZ = 5-Speed Auto W5A380 Transmission

Inner Paneling Sidewall, Hard Fiber
Figure IVB-220

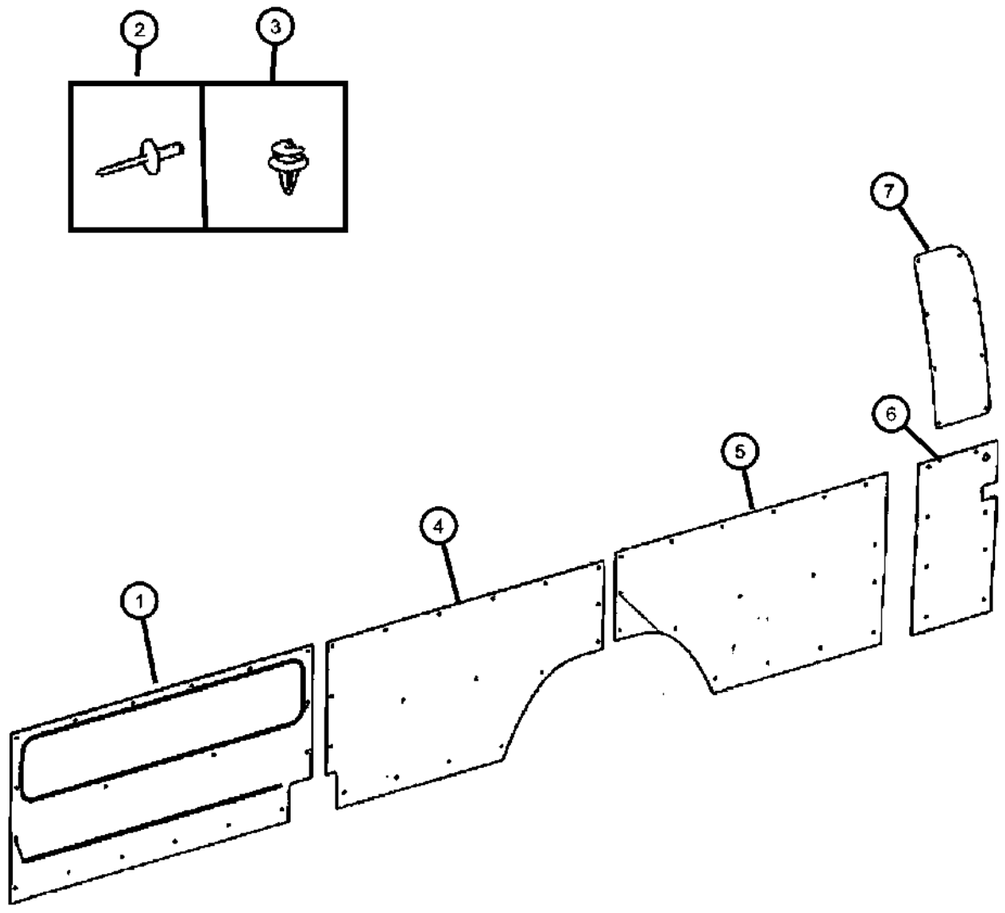

ITEM	PART NUMBER	QTY	LINE	SERIES	BODY	ENGINE	TRANS	TRIM	DESCRIPTION
		1	2, 3, 6, 7	L	17			*F7	[F7] With [CMG], Right
	1HD61XDVAA	1	2, 3, 6, 7	L	17			*A6	[A6] With [CMG], Left
		1	2, 3, 6, 7	L	17			*E7	[E7] With [CMG], Left
		1	2, 3, 6, 7	L	17			*F7	[F7] With [CMG], Left

SPRINTER (VB)

SERIES	LINE	BODY	ENGINE	TRANSMISSION
L = LOWLINE	3 = HD DODGE 2WD 2 = Med. Duty DODGE 2WD	03 = CAB CHASSIS WHEEL BASE 3 05 = CAB CHASSIS WHEEL BASE 5 13 = 119 WB 53 = 119 WB 15 = VAN WHEEL BASE 5 55 = WAGON WHEEL BASE 5 17 = VAN WHEEL BASE 7	EG2 = 3.5L V6 Gas Engine EXM = 3.0L V6 Turbo Diesel Engine	DGZ = 5-Speed Auto W5A380 Transmission

Inner Paneling Sidewall, Plastic
Figure IVB-225

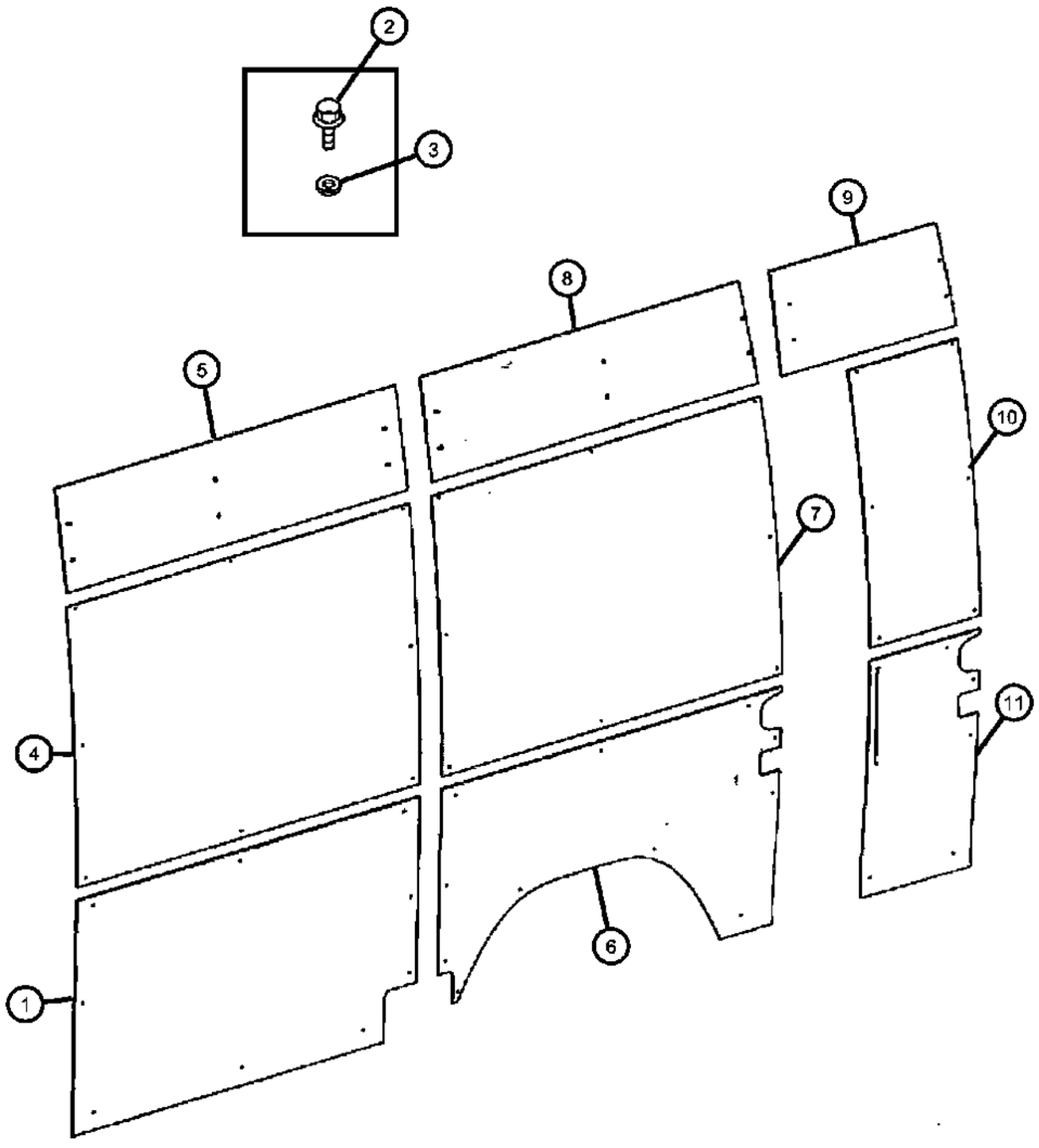

ITEM	PART NUMBER	QTY	LINE	SERIES	BODY	ENGINE	TRANS	TRIM	DESCRIPTION
1									PANEL, Side Trim
	1JE10NCVAA	1	2, 3, 6, 7	L	13, 15, 17, 53, 55			*E7	[E7]
		1	3, 6, 7, 2	L	13, 15, 17, 53, 55			*F7	[F7]
	1JE18NCVAA	1	2, 3, 6, 7	L	13, 15, 17, 53, 55			*AL	[A6]
2	06104117AA	8	2, 3, 6, 7	L	13, 15, 17, 53, 55				SCREW, Hex Head
3	05125754AA	8	2, 3, 6, 7	L	13, 15, 17, 53, 55				WASHER
4									PANEL, Side Trim
	1JE18NCVAA	1	2, 3, 6, 7	L	13, 15, 17, 53, 55			*AL	[A6]
		1	2, 3, 6, 7	L	13, 15, 17, 53, 55			*E7	[E7]
		1	2, 3, 6, 7	L	13, 15, 17, 53, 55			*F7	[F7]
5									PANEL, Side Trim
	1JE25NCVAA	1	2, 3, 6, 7	L	13, 15, 17, 53, 55			*AL	[A6], Right
		1	2, 3, 6, 7	L	13, 15, 17, 53, 55			*F7	[E7], Right
		1	2, 3, 6, 7	L	13, 15, 17, 53, 55			*E7	[F7], Right
	1JE24NCVAA	1	2, 3, 6, 7	L	13, 15, 17, 53, 55			*AL	[A6], Left
		1	2, 3, 6, 7	L	13, 15, 17, 53, 55			*E7	[E7], Left
		1	2, 3, 6, 7	L	13, 15, 17, 53, 55			*F7	[F7], Left
6									PANEL, Side Trim
	1JE27NCVAA	1	2, 3, 6, 7	L	13, 15, 17, 53, 55			*AL	[A6] With [5CF] and [CTE], Right & Left
		1	6, 7, 2, 3	L	13, 15, 17, 53, 55			*E7	[E7] With [5CF] and [CTE], Right & Left
		1	2, 3, 6, 7	L	13, 15, 17, 53, 55			*F7	[F7] With [5CF] and [CTE], Right & Left
	1JE28NCVAA	1	2, 3, 6, 7	L	13, 15, 17, 53, 55			*AL	[A6] With [5CF], [CTE] and [GLF], Right & Left
		1	2, 3, 6, 7	L	13, 15, 17, 53, 55			*E7	[E7] With [5CF], [CTE] and [GLF], Right & Left
		1	2, 3, 6, 7	L	13, 15, 17, 53, 55			*F7	[F7] With [5CF], [CTE] and [GLF], Right & Left

SPRINTER (VB)

SERIES	LINE	BODY	ENGINE	TRANSMISSION
L = LOWLINE	3 = HD DODGE 2WD 2 = Med. Duty DODGE 2WD	03 = CAB CHASSIS WHEEL BASE 3 05 = CAB CHASSIS WHEEL BASE 5 13 = 119 WB 53 = 119 WB 15 = VAN WHEEL BASE 5 55 = WAGON WHEEL BASE 5 17 = VAN WHEEL BASE 7	EG2 = 3.5L V6 Gas Engine EXM = 3.0L V6 Turbo Diesel Engine	DGZ = 5-Speed Auto W5A380 Transmission

Inner Paneling Sidewall, Plastic
Figure IVB-225

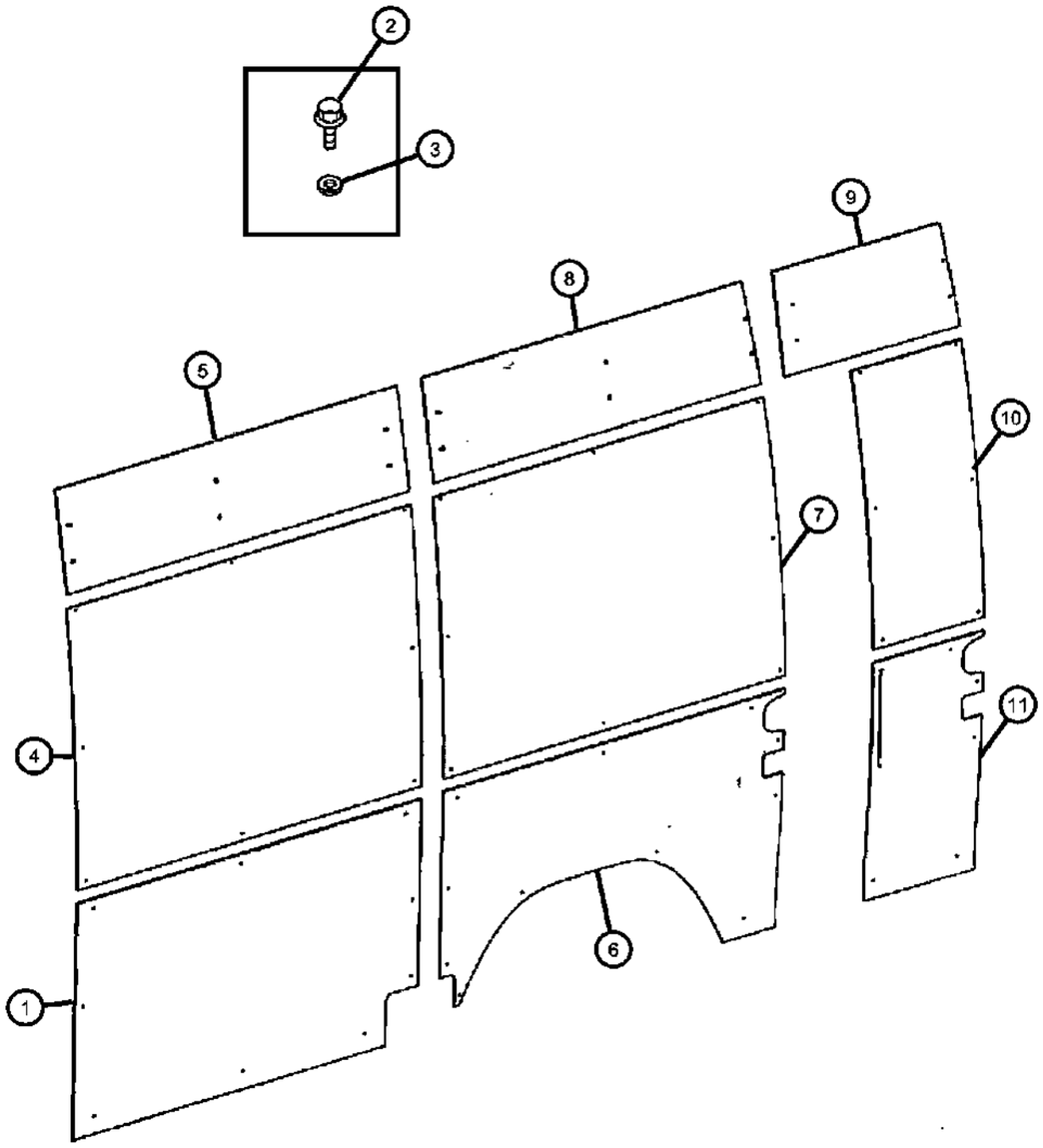

ITEM	PART NUMBER	QTY	LINE	SERIES	BODY	ENGINE	TRANS	TRIM	DESCRIPTION
	1JE29NCVAA	1	2, 3, 6, 7	L	13, 15, 17, 53, 55			*AL	[A6] With [5CG] and [CTE], Right & Left
		1	2, 3, 6, 7	L	13, 15, 17, 53, 55			*E7	[E7] With [5CG] and [CTE], Right & Left
	1JE30NCVAA	1	2, 3, 6, 7	L	13, 15, 17			*F7	[F7] With [5CG], [CTE] and [GLF], Right & Left
	1JE31NCVAA	1	2, 3, 6, 7	L	13, 15, 17			*AL	[A6] With [5CK] and [CTE], Right & Left
		1	2, 3, 6, 7	L	13, 15, 17			*E7	[E7] With [5CK] and [CTE], Right & Left
		1	2, 3, 6, 7	L	13, 15, 17			*F7	[F7] With [5CK] and [CTE], Right & Left
		1	2, 3, 6, 7	L	13, 15, 17, 53, 55			*F7	[F7] With [5CG] and [CTE], Right & Left
		1	2, 3, 6, 7	L	13, 15, 17			*AL	[A6] With [5CG], [CTE] and [GLF], Right & Left
		1	2, 3, 6, 7	L	13, 15, 17			*E7	[E7] With [5CG], [CTE] and [GLF], Right & Left
7									PANEL, Side Trim
	1JE32NCVAA	1	7, 2, 3, 6	L	13, 15, 17			*AL	[A6] With [5CG], Right & Left
		1	2, 3, 6, 7	L	13, 15, 17			*E7	[E7] With [5CG], Right & Left
		1	2, 3, 6, 7	L	13, 15, 17			*F7	[F7] With [5CG], Right & Left
	1JE45NCVAA	1	2, 3, 6, 7	L	13, 15, 17			*AL	[A6] With [5CF], Right & Left
		1	2, 3, 6, 7	L	13, 15, 17			*E7	[E7] With [5CF], Right & Left
		1	2, 3, 6, 7	L	13, 15, 17			*F7	[F7] With [5CF], Right & Left
8									PANEL, Side Trim
	1JE47NCVAA	1	2, 3, 6, 7	L	13, 15, 17			*AL	[A6] With [5CG] , [CTE] and [LDB]
		1	2, 3, 6, 7	L	13, 15, 17			*E7	[E7] With [5CG] , [CTE] and [LDB]
		1	2, 3, 6, 7	L	13, 15, 17			*F7	[F7] With [5CG] , [CTE] and [LDB]
	1JE48NCVAA	1	2, 3, 6, 7	L	13, 15, 17			*AL	[A6] With [5CK] and [CTE]
		1	2, 3, 6, 7	L	13, 15, 17			*E7	[E7] With [5CK] and [CTE]
	1JE46NCVAA	1	2, 3, 6, 7	L	13, 15, 17			*AL	[A6] With [5CG],and [CTE]
		1	2, 3, 6, 7	L	13, 15, 17			*E7	[E7] With [5CG],and [CTE]
		1	2, 3, 6, 7	L	13, 15, 17			*F7	[F7] With [5CG],and [CTE]
		1	2, 3, 6, 7	L	13, 15, 17			*F7	[F7] With [5CK] and [CTE]

SPRINTER (VB)

SERIES	LINE	BODY	ENGINE	TRANSMISSION
L = LOWLINE	3 = HD DODGE 2WD 2 = Med. Duty DODGE 2WD	03 = CAB CHASSIS WHEEL BASE 3 05 = CAB CHASSIS WHEEL BASE 5 13 = 119 WB 53 = 119 WB 15 = VAN WHEEL BASE 5 55 = WAGON WHEEL BASE 5 17 = VAN WHEEL BASE 7	EG2 = 3.5L V6 Gas Engine EXM = 3.0L V6 Turbo Diesel Engine	DGZ = 5-Speed Auto W5A380 Transmission

Inner Paneling Sidewall, Plastic
Figure IVB-225

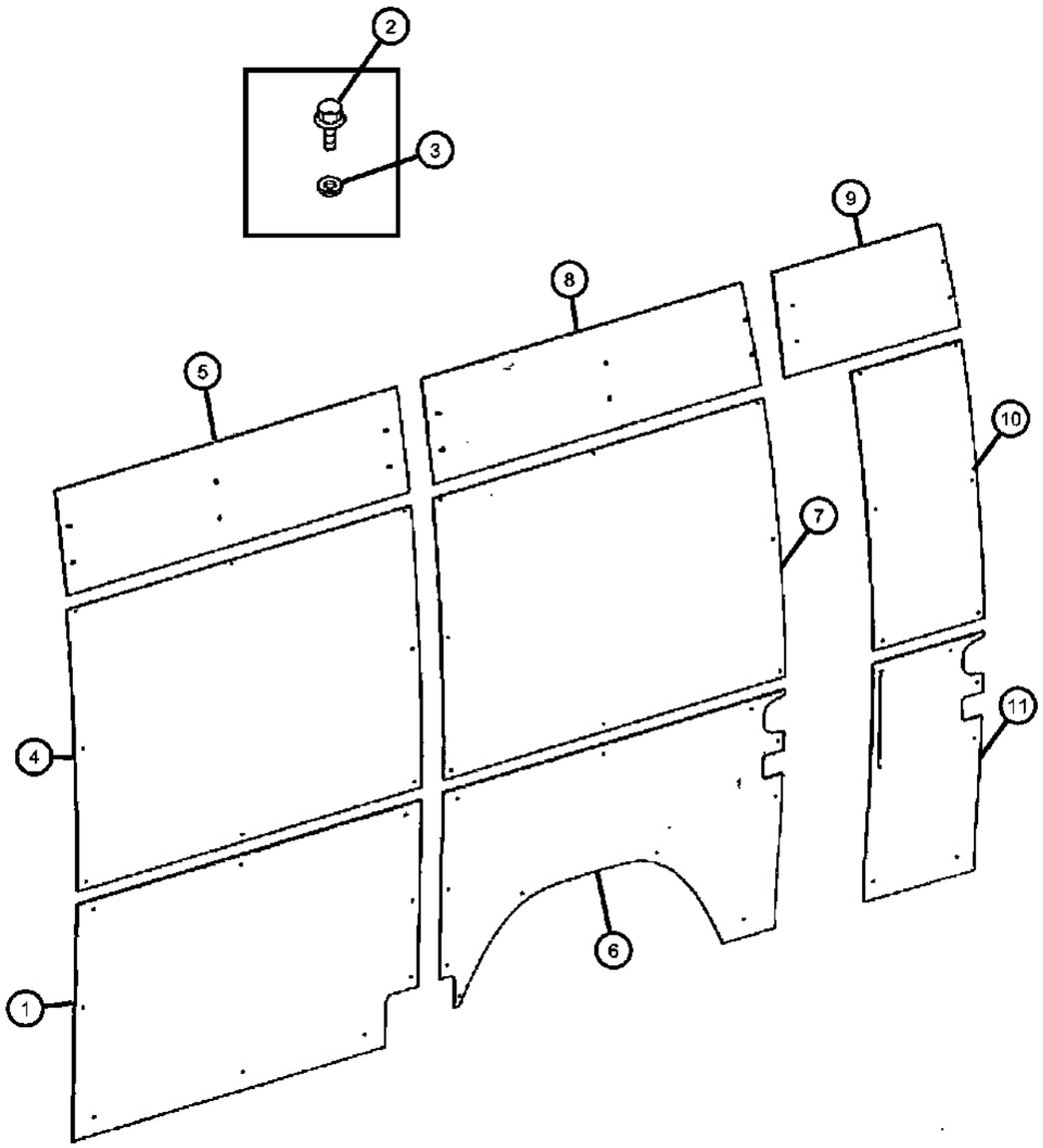

ITEM	PART NUMBER	QTY	LINE	SERIES	BODY	ENGINE	TRANS	TRIM	DESCRIPTION
9									PANEL, Side Trim
	1JE49NCVAA	1	2, 3, 6, 7	L	13, 15, 17			*AL	[A6] With [CTE]
		1	2, 3, 6, 7	L	13, 15, 17			*E7	[E7] With [CTE]
		1	2, 3, 6, 7	L	13, 15, 17			*F7	[F7] With [CTE]
	1JE50NCVAA	1	2, 3, 6, 7	L	13, 15, 17			*AL	[A6] With [CTE] and [GLF]
		1	2, 3, 6, 7	L	13, 15, 17			*E7	[E7] With [CTE] and [GLF]
		1	2, 3, 6, 7	L	13, 15, 17			*F7	[F7] With [CTE] and [GLF]
10									PANEL, Side Trim
	1JE51NCVAA	1	2, 3, 6, 7	L	13, 15, 17			*AL	[A6]
		1	2, 3, 6, 7	L	13, 15, 17			*E7	[E7]
		1	2, 3, 6, 7	L	13, 15, 17			*F7	[F7]
11									PANEL, Side Trim
	1JE52NCVAA	1	2, 3, 6, 7	L	13, 15, 17			*AL	[A6], Left
		1	2, 3, 6, 7	L	13, 15, 17			*E7	[E7], Left
		1	2, 3, 6, 7	L	13, 15, 17			*F7	[F7], Left
	1JE53NCVAA	1	2, 3, 6, 7	L	13, 15, 17			*AL	[A6], Right
		1	2, 3, 6, 7	L	13, 15, 17			*E7	[E7], Right
		1	3, 6, 7, 2	L	13, 15, 17			*F7	[F7], Right

SPRINTER (VB)

SERIES	LINE	BODY	ENGINE	TRANSMISSION
L = LOWLINE	3 = HD DODGE 2WD 2 = Med. Duty DODGE 2WD	03 = CAB CHASSIS WHEEL BASE 3 05 = CAB CHASSIS WHEEL BASE 5 13 = 119 WB 53 = 119 WB 15 = VAN WHEEL BASE 5 55 = WAGON WHEEL BASE 5 17 = VAN WHEEL BASE 7	EG2 = 3.5L V6 Gas Engine EXM = 3.0L V6 Turbo Diesel Engine	DGZ = 5-Speed Auto W5A380 Transmission

Inner Paneling Sidewall, Fabric
Figure IVB-230

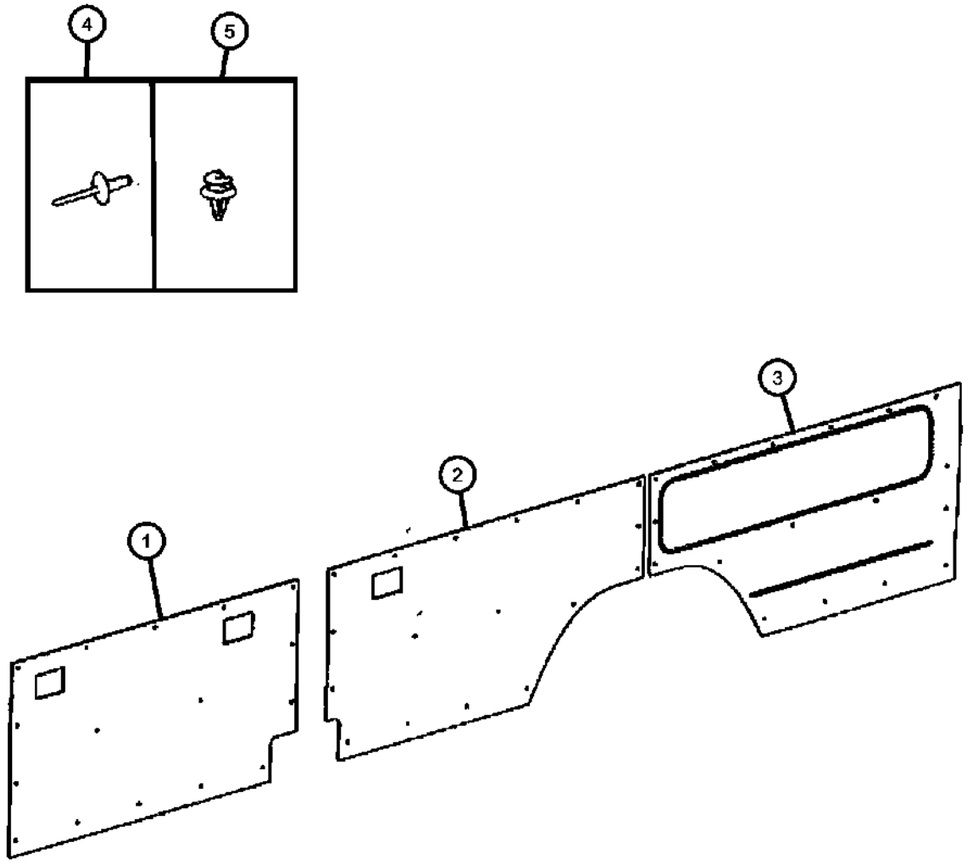

ITEM	PART NUMBER	QTY	LINE	SERIES	BODY	ENGINE	TRANS	TRIM	DESCRIPTION
1									PANEL, Side
	1HD241E7AA	1	2, 3, 6, 7	L	53, 55			*A6	[A6] With [RC5] Speaker Package, Right
		1	2, 3, 6, 7	L	53, 55			*E7	[E7] With [RC5] Speaker Package, Right
		1	2, 3, 6, 7	L	53, 55			*F7	[F7] With [RC5] Speaker Package, Right
	1HD261E7AA	1	2, 3, 6, 7	L	53, 55			*A6	[A6] Without [RC5] Speaker Package, Right
		1	2, 3, 6, 7	L	53, 55			*E7	[E7] Without [RC5] Speaker Package, Right
		1	2, 3, 6, 7	L	55, 53			*F7	[F7] Without [RC5] Speaker Package, Right
	1HD251E7AA	1	2, 3, 6, 7	L	53, 55			*A6	[A6] With [RC5] Speaker Package, Left
		1	2, 3, 6, 7	L	53, 55			*E7	[E7] With [RC5] Speaker Package, Left
		1	2, 3, 6, 7	L	53, 55			*F7	[F7] With [RC5] Speaker Package, Left
	1HD271E7AA	1	2, 3, 6, 7	L	53, 55			*A6	[A6] Without [RC5] Speaker Package, Left
		1	2, 3, 6, 7	L	53, 55			*E7	[E7] Without [RC5] Speaker Package, Left
		1	2, 3, 6, 7	L	53, 55			*F7	[F7] Without [RC5] Speaker Package, Left
2									PANEL, Side Trim
	1HD211E7AA	1	2, 6	L	53			*E7	[E7] With [CV9] Rear Ash Trays, Without [RC5] Speaker Package, Left
		1	2, 6	L	53			*A6	[A6] With [CV9] Rear Ash Trays, Without [RC5] Speaker Package, Left
		1	2, 6	L	53			*F7	[F7] With [CV9] Rear Ash Trays, Without [RC5] Speaker Package, Left
	1HD351E7AA	1	2, 6	L	53			*A6	[A6] With [CV9] Rear Ash Trays, With [RC5] Speaker Package, Left
		1	2, 6	L	13, 53			*E7	[E7] With [CV9] Rear Ash Trays, With [RC5] Speaker Package, Left
		1	2, 6	L	13, 53			*F7	[F7] With [CV9] Rear Ash Trays, With [RC5] Speaker Package, Left

SPRINTER (VB)

SERIES	LINE	BODY	ENGINE	TRANSMISSION
L = LOWLINE	3 = HD DODGE 2WD 2 = Med. Duty DODGE 2WD	03 = CAB CHASSIS WHEEL BASE 3 05 = CAB CHASSIS WHEEL BASE 5 13 = 119 WB 53 = 119 WB 15 = VAN WHEEL BASE 5 55 = WAGON WHEEL BASE 5 17 = VAN WHEEL BASE 7	EG2 = 3.5L V6 Gas Engine EXM = 3.0L V6 Turbo Diesel Engine	DGZ = 5-Speed Auto W5A380 Transmission

Inner Paneling Sidewall, Fabric
Figure IVB-230

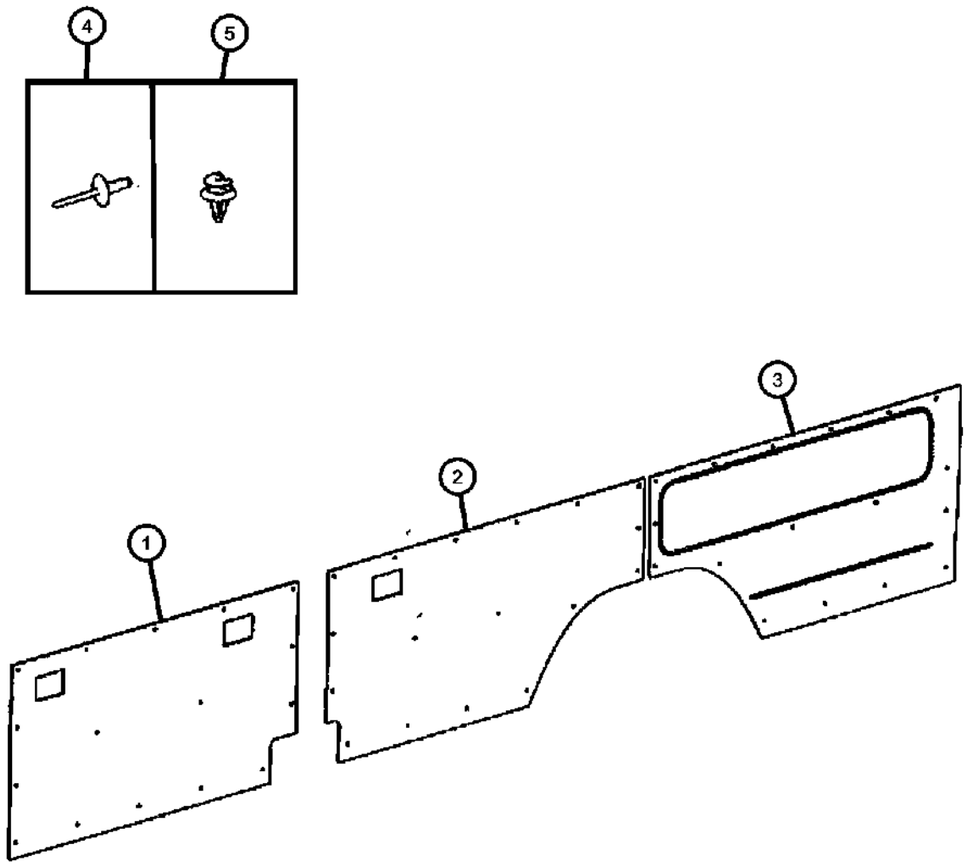

ITEM	PART NUMBER	QTY	LINE	SERIES	BODY	ENGINE	TRANS	TRIM	DESCRIPTION
	1HD41NC-VAA	1	2, 3, 6, 7	L	55			*A6	[A6] With [CV9] Rear Ash Trays, With [RC5] Speaker Package, Left
		1	2, 3, 6, 7	L	55			*F7	[F7] With [CV9] Rear Ash Trays, With [RC5] Speaker Package, Left
		1	2, 3, 6, 7	L	55			*E7	[E7] With [CV9] Rear Ash Trays, With [RC5] Speaker Package, Left
3									PANEL, Side Trim
	1HD53DX8AA	1	2, 3, 6, 7	L	13, 15, 17, 53, 55			*AL	[A6], Right
		1	2, 3, 6, 7	L	13, 15, 17, 53, 55			*E7	[E7], Right
		1	2, 3, 6, 7	L	13, 15, 17, 53, 55			*F7	[F7], Right
4	68006483AA	12	2, 3, 6, 7	L	13, 15, 17, 53, 55				RIVET
5	68005152AA	12	2, 3, 6, 7	L	13, 15, 17, 53, 55				FASTENER

SPRINTER (VB)

SERIES	LINE	BODY	ENGINE	TRANSMISSION
L = LOWLINE	3 = HD DODGE 2WD 2 = Med. Duty DODGE 2WD	03 = CAB CHASSIS WHEEL BASE 3 05 = CAB CHASSIS WHEEL BASE 5 13 = 119 WB 53 = 119 WB 15 = VAN WHEEL BASE 5 55 = WAGON WHEEL BASE 5 17 = VAN WHEEL BASE 7	EG2 = 3.5L V6 Gas Engine EXM = 3.0L V6 Turbo Diesel Engine	DGZ = 5-Speed Auto W5A380 Transmission

Inner Paneling Window-Pillar in Cab
Figure IVB-235

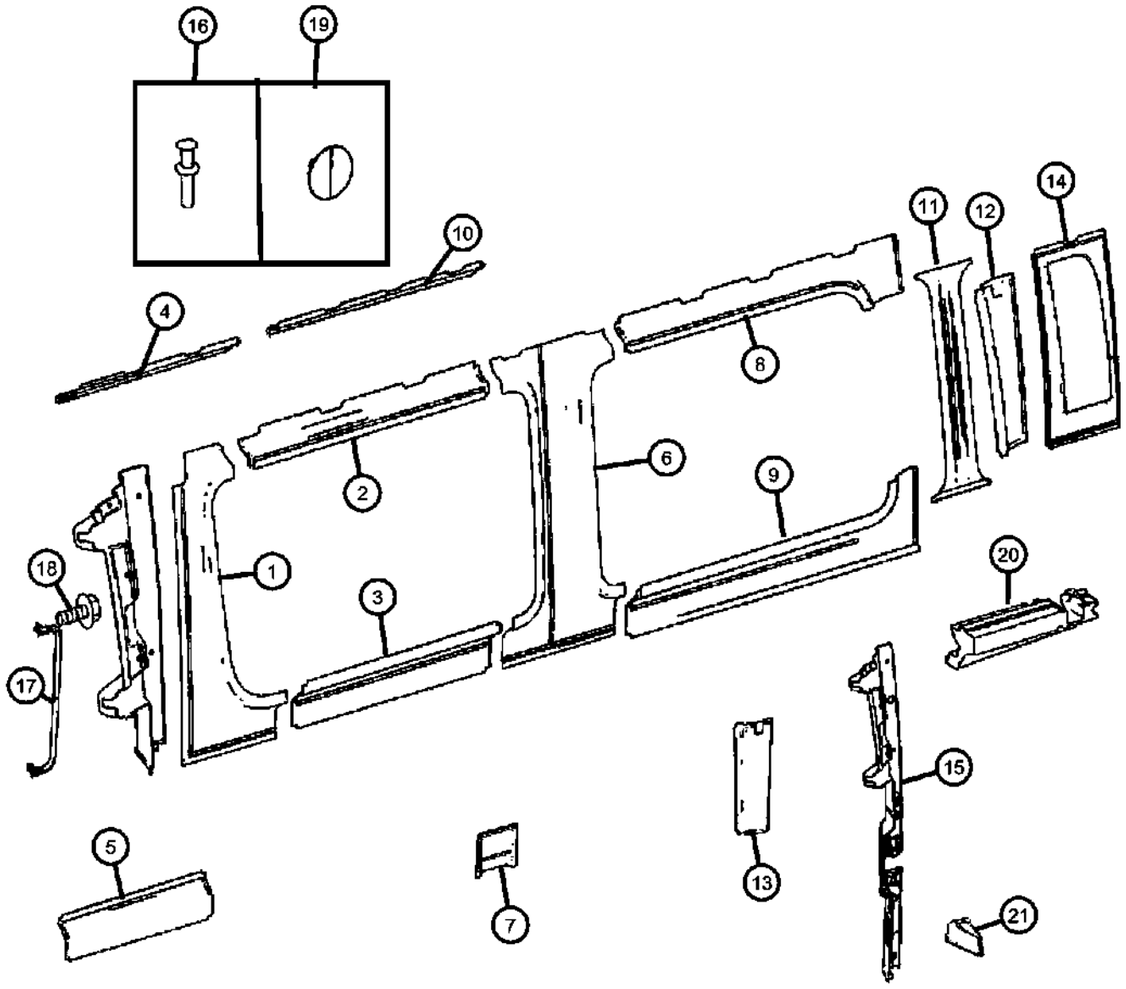

ITEM	PART NUMBER	QTY	LINE	SERIES	BODY	ENGINE	TRANS	TRIM	DESCRIPTION
1									PANEL, B Pillar Trim
	1HC76XDVAA	1	2, 3, 6, 7	L	13, 15, 17, 53, 55			*E7	[E7], Right
		1	2, 3, 6, 7	L	13, 15, 17, 53, 55			*F7	[F7], Right
	1HC77XDVAA	1	2, 3, 6, 7	L	13, 15, 17, 53, 55			*A6	[A6], Left
		1	2, 3, 6, 7	L	15, 17, 53, 55, 13			*E7	[E7], Left
		1	2, 3, 6, 7	L	13, 15, 17, 53, 55			*A6	[A6], Right
		1	2, 3, 6, 7	L	13, 15, 17, 53, 55			*F7	[F7], Left
2									PANEL, Header
	1HD05XDVAA	1	2, 3, 6, 7	L	15, 17, 55			*A6	[A6], Right
		1	2, 3, 6, 7	L	15, 17, 55			*E7	[E7], Right
		1	2, 3, 6, 7	L	15, 17, 55			*F7	[F7], Right
	1HC79XDVAA	1	2, 3, 6, 7	L	13, 15, 17, 53, 55			*A6	[A6], Left
		1	2, 3, 6, 7	L	13, 15, 17, 53, 55			*E7	[E7], Left
		1	2, 3, 6, 7	L	13, 15, 17, 53, 55			*F7	[F7], Left
	1HD06XDVAA	1	2, 3, 6, 7	L	13, 53			*A6	[A6], Right
		1	2, 3, 6, 7	L	13, 53			*E7	[E7], Right
		1	2, 3, 6, 7	L	13, 53			*F7	[F7], Right
3									PANEL, Lower Rear, B-Pillar Bottom Left
	1HC81XDVAA	1	2, 3, 6, 7	L	13, 15, 17, 53, 55			*E7	[E7]
		1	2, 3, 6, 7	L	13, 15, 17, 53, 55			*F7	[F7]
		1	2, 3, 6, 7	L	13, 15, 17, 53, 55			*A6	[A6], Left
4									PANEL, Header, B-Pillar Top Right
	1HC78XDVAA	1	2, 3, 6, 7	L	13, 15, 17, 53, 55			*A6	[A6], Right
		1	2, 3, 6, 7	L	13, 15, 17, 53, 55			*E7	[E7],
		1	2, 3, 6, 7	L	53, 55, 13, 15, 17			*F7	[F7]

SPRINTER (VB)

SERIES	LINE	BODY	ENGINE	TRANSMISSION
L = LOWLINE	3 = HD DODGE 2WD 2 = Med. Duty DODGE 2WD	03 = CAB CHASSIS WHEEL BASE 3 05 = CAB CHASSIS WHEEL BASE 5 13 = 119 WB 53 = 119 WB 15 = VAN WHEEL BASE 5 55 = WAGON WHEEL BASE 5 17 = VAN WHEEL BASE 7	EG2 = 3.5L V6 Gas Engine EXM = 3.0L V6 Turbo Diesel Engine	DGZ = 5-Speed Auto W5A380 Transmission

Inner Paneling Window-Pillar in Cab
Figure IVB-235

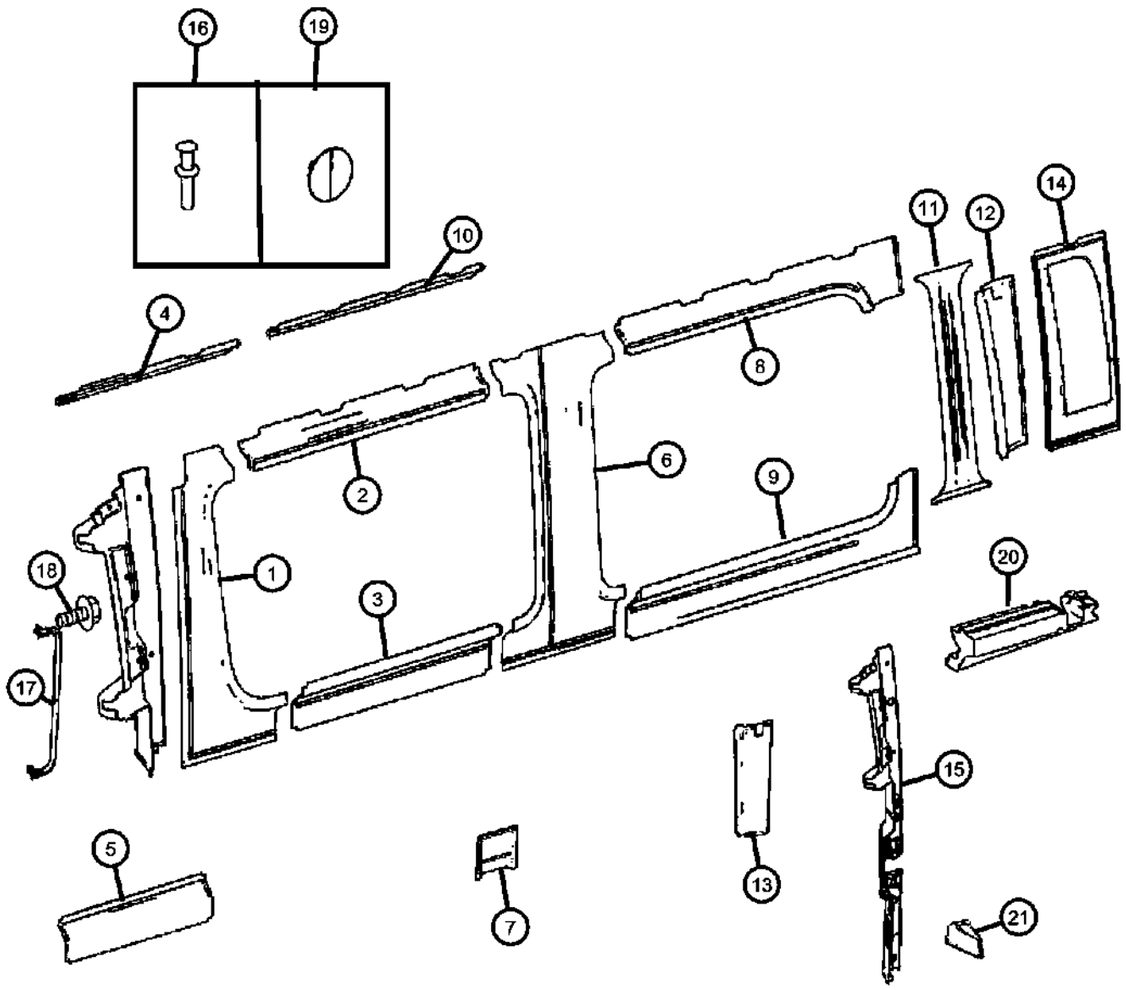

ITEM	PART NUMBER	QTY	LINE	SERIES	BODY	ENGINE	TRANS	TRIM	DESCRIPTION
5									PANEL, Lower Rear, B-Pillar Bottom Right
	1HC80XDVAA	1	2, 3, 6, 7	L	13, 15, 17, 53, 55			*F7	[F7], Right
		1	2, 3, 6, 7	L	13, 15, 17, 53, 55			*A6	[A6], Right
		1	2, 3, 6, 7	L	13, 15, 17, 53, 55			*E7	[E7], Right
6									PANEL, C Pillar
	1HC84XDVAA	1	2, 3, 6, 7	L	13, 15, 17, 53, 55			*A6	[A6], Left
		1	2, 3, 6, 7	L	13, 15, 17, 53, 55			*E7	[E7], Left
		1	2, 3, 6, 7	L	13, 15, 17, 53, 55			*F7	[F7], Left
	1HC89XDVAA	1	2, 3, 6, 7	L	13, 15, 17, 53, 55			*A6	[A6], Right
		1	2, 3, 6, 7	L	13, 15, 17, 53, 55			*E7	[E7], Right
		1	2, 3, 6, 7	L	13, 15, 17, 53, 55			*F7	[F7], Right
7									PANEL, C Pillar
	1HC85XDVAA	1	2, 3, 6, 7	L	13, 15, 17, 53, 55			*A6	[A6] With [GKE] Left Sliding Door, No Glass,With [58Q] Window Pillar Paneling, Left
		1	2, 3, 6, 7	L	13, 15, 17, 53, 55			*E7	[E7] With [GKE] Left Sliding Door, No Glass,With [58Q] Window Pillar Paneling, Left
		1	2, 3, 6, 7	L	13, 15, 17, 53, 55			*F7	[F7] With [GKE] Left Sliding Door, No Glass,With [58Q] Window Pillar Paneling, Left
	1HC86XDVAA	1	2, 3, 6, 7	L	13, 15, 17, 53, 55			*A6	[A6] Without [GKE] Left Sliding Door, No Glass,Without [GKA] Right Sliding Door,With [58Q] Window Pillar Paneling, Right & Left
		1	2, 3, 6, 7	L	53, 55, 13, 15, 17			*E7	[E7] Without [GKE] Left Sliding Door, No Glass,Without [GKA] Right Sliding Door,With [58Q] Window Pillar Paneling, Right & Left

SPRINTER (VB)

SERIES	LINE	BODY	ENGINE	TRANSMISSION
L = LOWLINE	3 = HD DODGE 2WD 2 = Med. Duty DODGE 2WD	03 = CAB CHASSIS WHEEL BASE 3 05 = CAB CHASSIS WHEEL BASE 5 13 = 119 WB 53 = 119 WB 15 = VAN WHEEL BASE 5 55 = WAGON WHEEL BASE 5 17 = VAN WHEEL BASE 7	EG2 = 3.5L V6 Gas Engine EXM = 3.0L V6 Turbo Diesel Engine	DGZ = 5-Speed Auto W5A380 Transmission

Inner Paneling Window-Pillar in Cab
Figure IVB-235

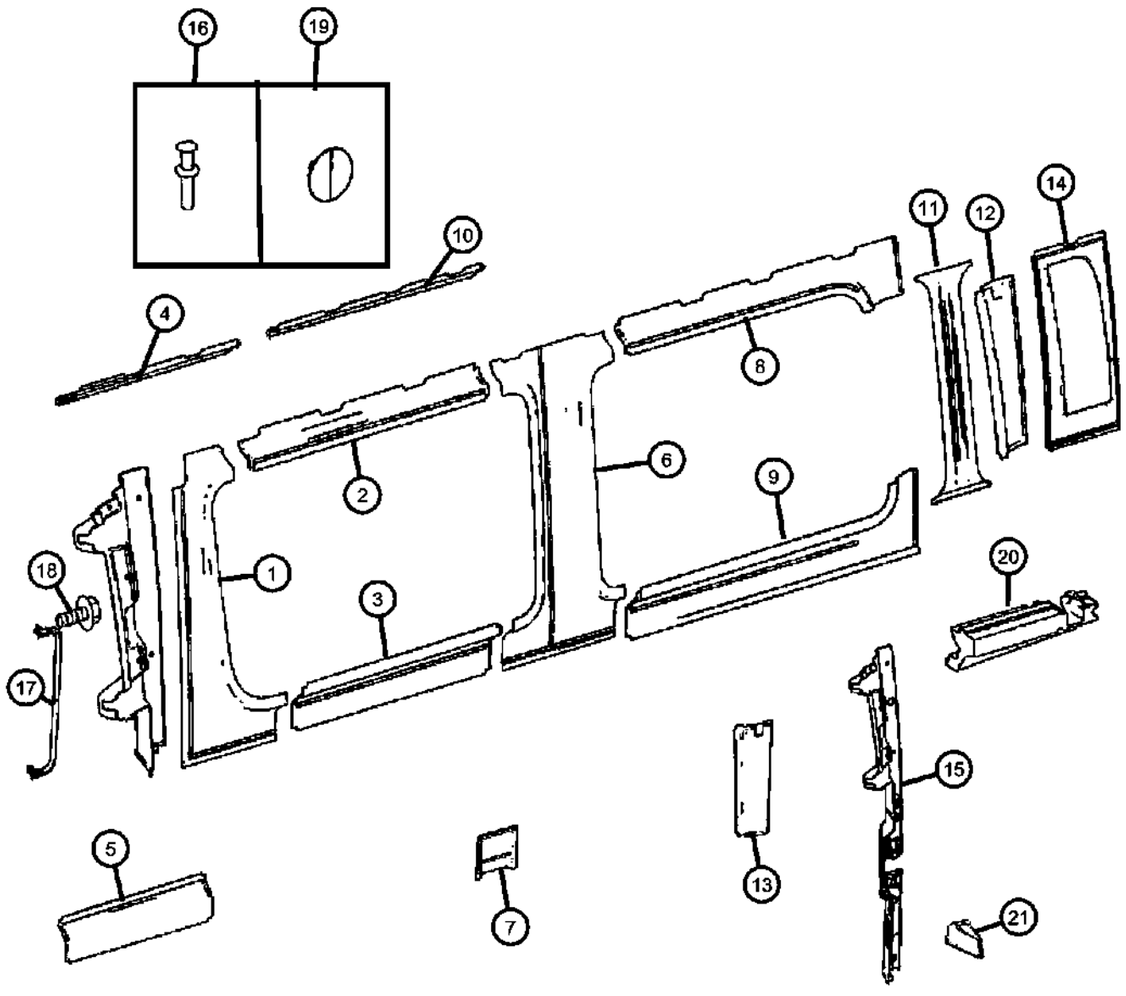

ITEM	PART NUMBER	QTY	LINE	SERIES	BODY	ENGINE	TRANS	TRIM	DESCRIPTION
		1	2, 3, 6, 7	L	13, 15, 17, 53, 55			*F7	[F7] Without [GKE] Left Sliding Door, No Glass,Without [GKA] Right Sliding Door,With [58Q] Window Pillar Paneling, Right & Left
	1HC90XDVAA	1	2, 3, 6, 7	L	13, 15, 17, 53, 55			*A6	[A6] With [GKA] Right Sliding Door,With [58Q] Window Pillar Paneling, Right
		1	2, 3, 6, 7	L	13, 15, 17, 53, 55			*E7	[E7] With [GKA] Right Sliding Door,With [58Q] Window Pillar Paneling, Right
		1	2, 3, 6, 7	L	13, 15, 17, 53, 55			*F7	[F7] With [GKA] Right Sliding Door,With [58Q] Window Pillar Paneling, Right
8									PANEL, Header
	1HC92XDVAA	1	2, 3, 6, 7	L	15, 17, 55			*A6	[A6] C-Pillar Top, Right
		1	2, 3, 6, 7	L	15, 17, 55			*E7	[E7] C-Pillar Top, Right
		1	2, 3, 6, 7	L	15, 17, 55			*F7	[F7] C-Pillar Top, Right
	1HC93XDVAA	1	2, 3, 6, 7	L	15, 17, 55			*E7	[E7] C-Pillar Top, Left
		1	2, 3, 6, 7	L	15, 17, 55			*F7	[F7] C-Pillar Top, Left
	1HC94XDVAA	1	2, 3, 6, 7	L	13, 53			*E7	[A6] C-Pillar Top, Right
		1	2, 3, 6, 7	L	13, 53			*F7	[E7] C-Pillar Top, Right
	1HC95XDVAA	1	2, 3, 6, 7	L	13, 53			*A6	[A6] C-Pillar Top, Left
	1HC95XDVAA	1	2, 3, 6, 7	L	13, 53			*A6	[A6] C-Pillar Top, Left
		1	2, 3, 6, 7	L	15, 17, 55			*A6	[A6] C-Pillar Top, Left
		1	2, 3, 6, 7	L	13, 53			*F7	[F7] C-Pillar Top, Left
	1HC96XDVAA	1	2, 3, 6, 7	L	15, 17, 55			*A6	[F7] C-Pillar Top, Right
		1	2, 3, 6, 7	L	13, 53			*E7	[E7] C-Pillar Top, Left
9									PANEL, Lower Rear
	1HC98XDVAA	1	2, 3, 6, 7	L	15, 17, 55			*A6	[A6] Rear Bottom, Right
		1	2, 3, 6, 7	L	15, 17, 55			*E7	[E7] Rear Bottom, Right
	1HC99XDVAA	1	2, 3, 6, 7	L	15, 17, 55			*E7	[E7] Rear Bottom, Left
		1	2, 3, 6, 7	L	15, 17, 55			*F7	[F7] Rear Bottom, Left
	1HD00XDVAA	1	2, 3, 6, 7	L	13, 53			*A6	[A6] C-Pillar Bottom, Right
		1	2, 3, 6, 7	L	13, 53			*E7	[E7] C-Pillar Bottom, Right
		1	2, 3, 6, 7	L	13, 53			*F7	[F7] C-Pillar Bottom, Right
		1	2, 3, 6, 7	L	15, 17, 55			*F7	[F7] Rear Bottom, Right

SPRINTER (VB)

SERIES	LINE	BODY	ENGINE	TRANSMISSION
L = LOWLINE	3 = HD DODGE 2WD 2 = Med. Duty DODGE 2WD	03 = CAB CHASSIS WHEEL BASE 3 05 = CAB CHASSIS WHEEL BASE 5 13 = 119 WB 53 = 119 WB 15 = VAN WHEEL BASE 5 55 = WAGON WHEEL BASE 5 17 = VAN WHEEL BASE 7	EG2 = 3.5L V6 Gas Engine EXM = 3.0L V6 Turbo Diesel Engine	DGZ = 5-Speed Auto W5A380 Transmission

AR = use ase required - = Non illustrrated part

<< RETURN TO GROUP INDEX

Inner Paneling Window-Pillar in Cab
Figure IVB-235

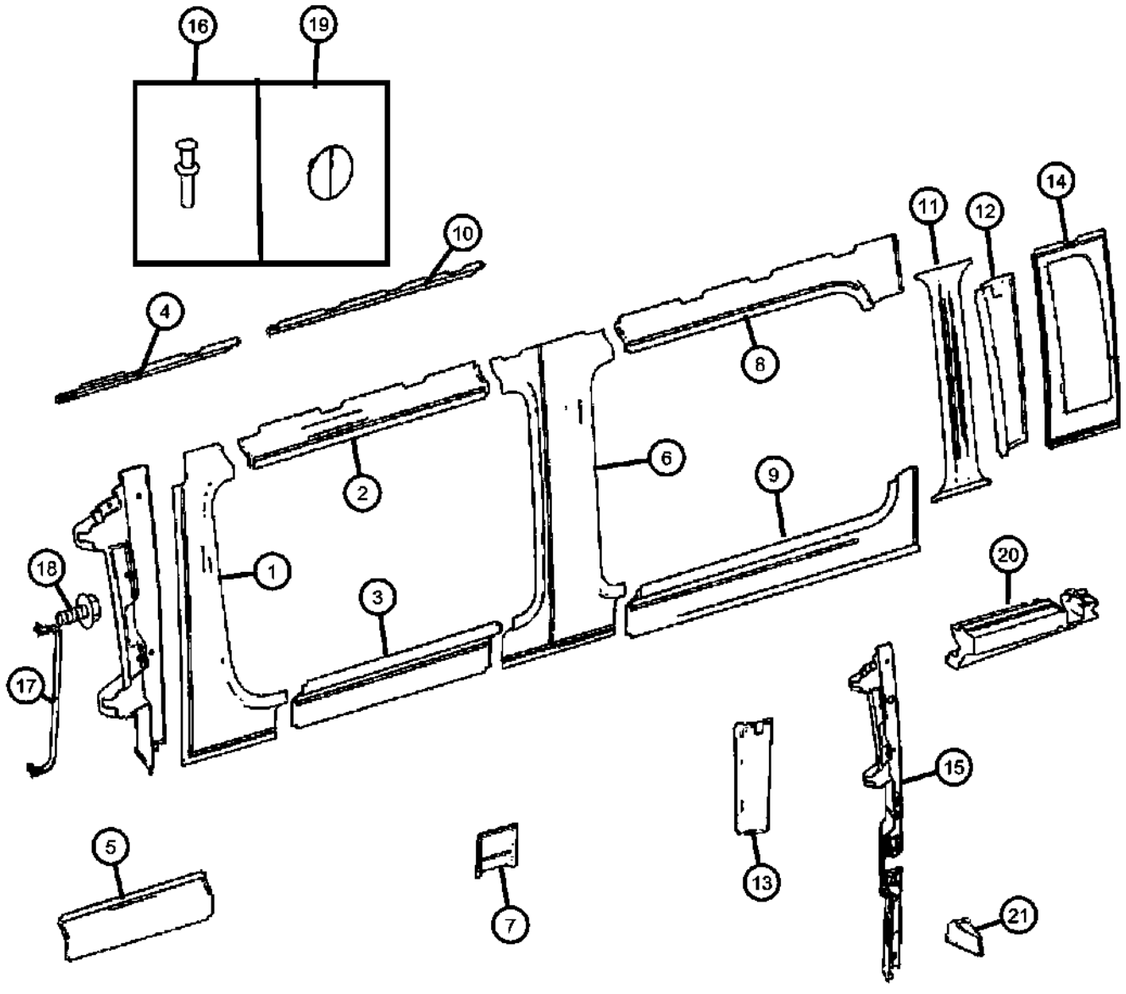

ITEM	PART NUMBER	QTY	LINE	SERIES	BODY	ENGINE	TRANS	TRIM	DESCRIPTION
		1	2, 3, 6, 7	L	15, 17, 55			*A6	[A6] Rear Bottom, Left
	1HD01XDVAA	1	2, 3, 6, 7	L	13, 53			*F7	[F7] C-Pillar Bottom, Left
	1HD03XDVAA	1	2, 3, 6, 7	L	15, 17, 55			*A6	[A6] Central Bottom, Left
		1	2, 3, 6, 7	L	15, 17, 55			*E7	[E7] Central Bottom, Left
		1	2, 3, 6, 7	L	15, 17, 55			*F7	[F7] Central Bottom, Left
		1	2, 3, 6, 7	L	13, 53			*A6	[A6] C-Pillar Bottom, Left
		1	2, 3, 6, 7	L	13, 53			*E7	[E7] C-Pillar Bottom, Left
10									PANEL, Header
	1HD02XDVAA	1	2, 3, 6, 7	L	15, 17, 55			*A6	Right
		1	2, 3, 6, 7	L	15, 17, 55			*E7	Right
		1	2, 3, 6, 7	L	15, 17, 55			*F7	Right
11									COVER, Rear Window Moulding
	1HC91XDVAA	1	2, 3, 6, 7	L	15, 17, 55			*A6	[A6], Left
		1	2, 3, 6, 7	L	15, 17, 55			*E7	[E7], Left
		1	2, 3, 6, 7	L	15, 17, 55			*F7	[F7], Left
	1HD04XDVAA	1	2, 3, 6, 7	L	13, 53			*A6	[A6], Left
		1	2, 3, 6, 7	L	13, 53			*E7	[E7], Left
		1	2, 3, 6, 7	L	13, 53			*F7	[F7], Left
12									PANEL, D Pillar Trim
	1HD07XDVAA	1	2, 3, 6, 7	L	13, 15, 17, 53, 55			*F7	[F7], Left
		1	2, 3, 6, 7	L	13, 15, 17, 53, 55			*A6	[A6], Left
		1	2, 3, 6, 7	L	13, 15, 17, 53, 55			*E7	[E7], Left
13									PANEL, D Pillar Trim
	1HD08XDVAA	1	2, 3, 6, 7	L	13, 15, 17, 53, 55			*A6	[A6]
		1	2, 3, 6, 7	L	13, 15, 17, 53, 55			*E7	[E7]
		1	2, 3, 6, 7	L	13, 15, 17, 53, 55			*F7	[F7]
14									PANEL, D Pillar Trim
	1HD10XDVAA	1	2, 3, 6, 7	L	17			*E7	[E7], Right
		1	2, 3, 6, 7	L	17			*F7	[F7], Right

SPRINTER (VB)

SERIES	LINE	BODY	ENGINE	TRANSMISSION
L = LOWLINE	3 = HD DODGE 2WD 2 = Med. Duty DODGE 2WD	03 = CAB CHASSIS WHEEL BASE 3 05 = CAB CHASSIS WHEEL BASE 5 13 = 119 WB 53 = 119 WB 15 = VAN WHEEL BASE 5 55 = WAGON WHEEL BASE 5 17 = VAN WHEEL BASE 7	EG2 = 3.5L V6 Gas Engine EXM = 3.0L V6 Turbo Diesel Engine	DGZ = 5-Speed Auto W5A380 Transmission

Inner Paneling Window-Pillar in Cab
Figure IVB-235

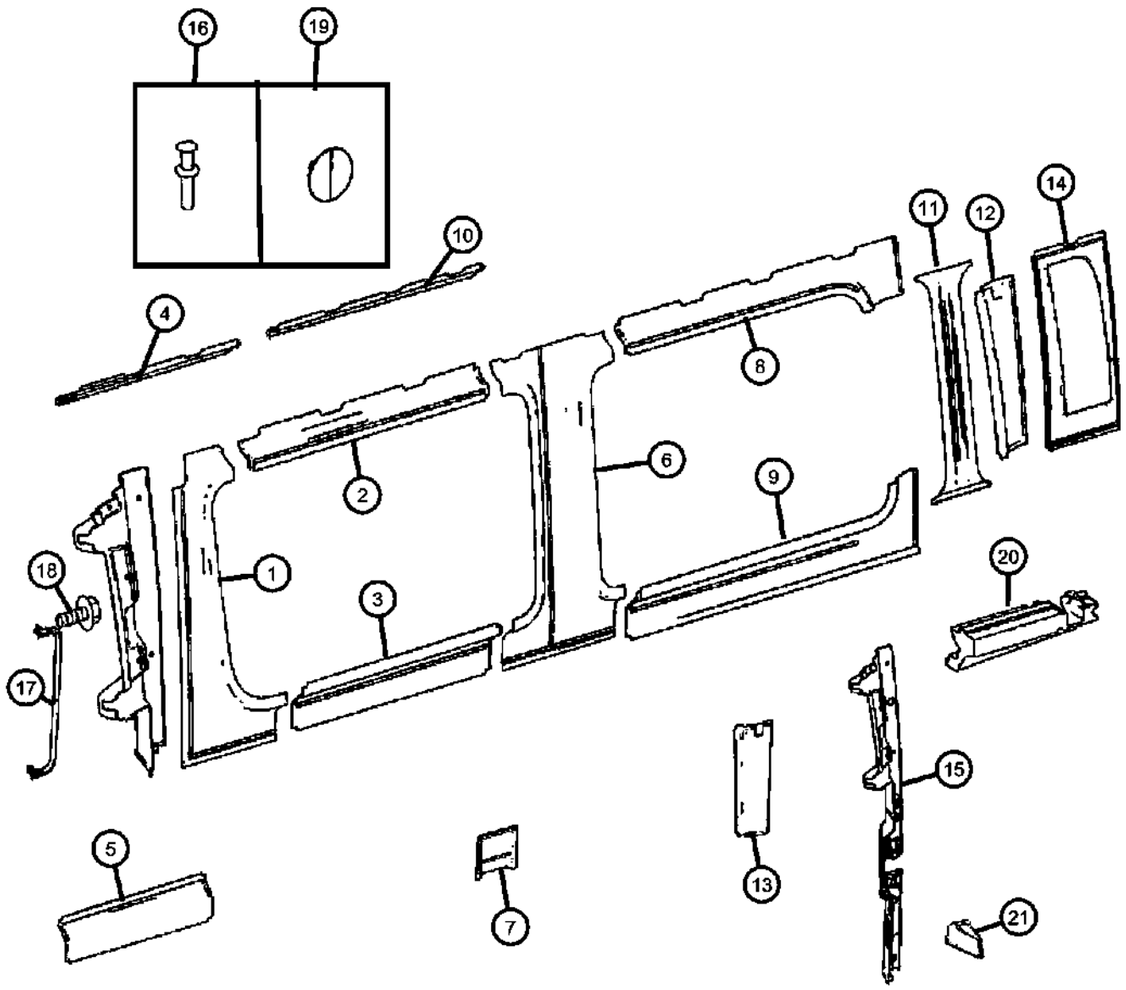

ITEM	PART NUMBER	QTY	LINE	SERIES	BODY	ENGINE	TRANS	TRIM	DESCRIPTION
	1HD09XDVAA	1	2, 3, 6, 7	L	17			*A6	[A6], Left
		1	2, 3, 6, 7	L	17			*E7	[E7], Left
		1	2, 3, 6, 7	L	17			*F7	[F7], Left
		1	2, 3, 6, 7	L	17			*A6	[A6], Right
15									PANEL, D Pillar Trim
	1HD12XDVAA	1	2, 3, 6, 7	L	13, 15, 17, 53, 55			*A6	[A6],With [CSQ] Right Rear Assist Handle, Right
	1HD14XDVAA	1	2, 3, 6, 7	L	13, 15, 17, 53, 55			*A6	[A6],Without [CSQ] Right Rear Assist Handles,Without [CSZ] Rear Passenger Assist Handles, Right
		1	2, 3, 6, 7	L	13, 15, 17, 53, 55			*E7	[E7],With [CSQ] Right Rear Assist Handle, Right
		1	2, 3, 6, 7	L	13, 15, 17, 53, 55			*F7	[F7],With [CSQ] Right Rear Assist Handle, Right
	1HD13XDVAA	1	2, 3, 6, 7	L	13, 15, 17, 53, 55			*A6	[A6],With [CSZ] Rear Passenger Assist Handles, Left
		1	2, 3, 6, 7	L	13, 15, 17, 53, 55			*E7	[E7],With [CSZ] Rear Passenger Assist Handles, Left
		1	2, 3, 6, 7	L	13, 15, 17, 53, 55			*F7	[F7],With [CSZ] Rear Passenger Assist Handles, Left
		1	2, 3, 6, 7	L	13, 15, 17, 53, 55			*E7	[E7],Without [CSQ] Right Rear Assist Handles,Without [CSZ] Rear Passenger Assist Handles, Right
		1	2, 3, 6, 7	L	13, 15, 17, 53, 55			*F7	[F7],Without [CSQ] Right Rear Assist Handles,Without [CSZ] Rear Passenger Assist Handles, Right
	1HD15XDVAA	1	2, 3, 6, 7	L	13, 15, 17, 53, 55			*A6	[A6],Without [CSQ] Right Rear Assist Handles,Without [CSZ] Rear Passenger Assist Handles, Left
		1	2, 3, 6, 7	L	13, 15, 17, 53, 55			*E7	[E7],Without [CSQ] Right Rear Assist Handles,Without [CSZ] Rear Passenger Assist Handles, Left
		1	2, 3, 6, 7	L	13, 15, 17, 53, 55			*F7	[F7],Without [CSQ] Right Rear Assist Handles,Without [CSZ] Rear Passenger Assist Handles, Left
16									RIVET, RIVET

SPRINTER (VB)

SERIES	LINE	BODY	ENGINE	TRANSMISSION
L = LOWLINE	3 = HD DODGE 2WD 2 = Med. Duty DODGE 2WD	03 = CAB CHASSIS WHEEL BASE 3 05 = CAB CHASSIS WHEEL BASE 5 13 = 119 WB 53 = 119 WB 15 = VAN WHEEL BASE 5 55 = WAGON WHEEL BASE 5 17 = VAN WHEEL BASE 7	EG2 = 3.5L V6 Gas Engine EXM = 3.0L V6 Turbo Diesel Engine	DGZ = 5-Speed Auto W5A380 Transmission

Inner Paneling Window-Pillar in Cab
Figure IVB-235

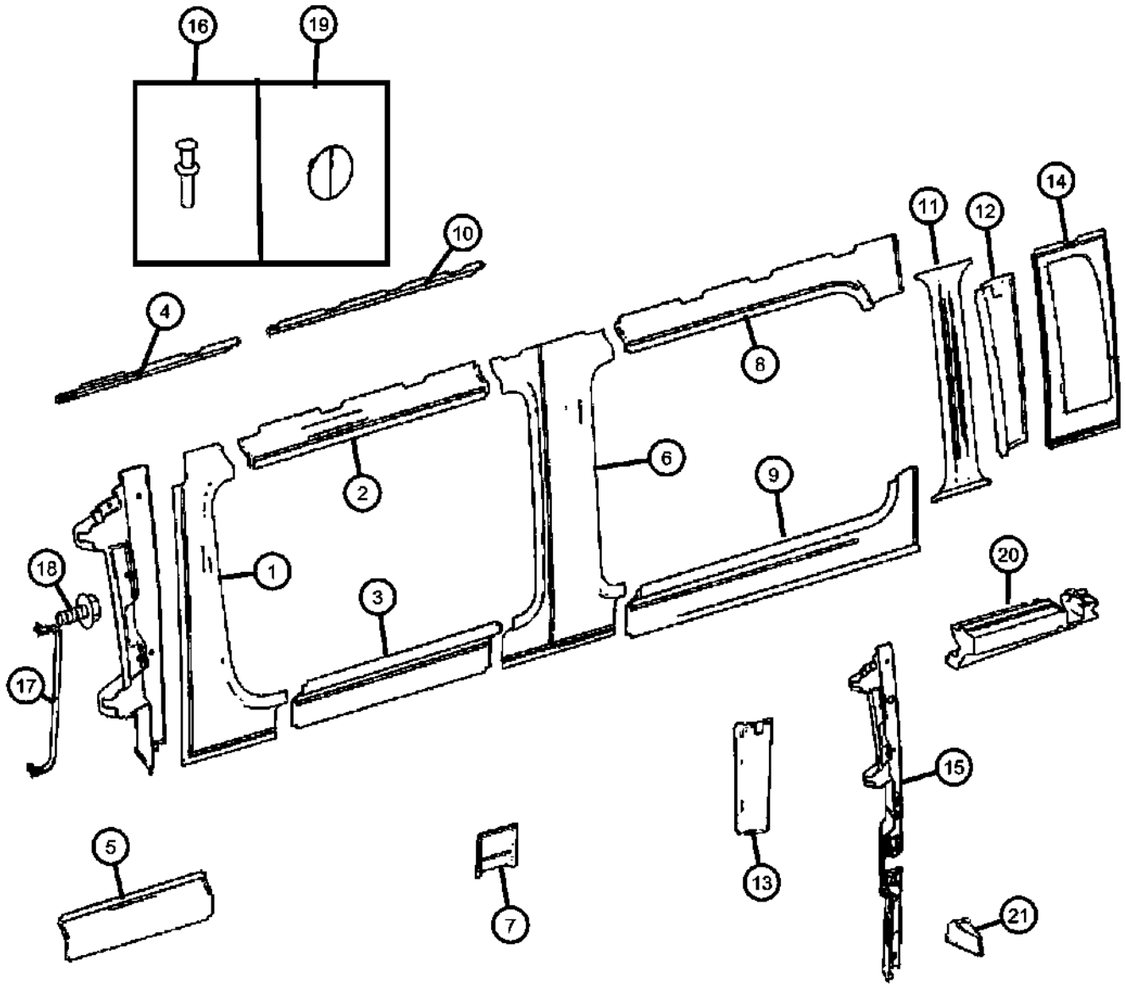

ITEM	PART NUMBER	QTY	LINE	SERIES	BODY	ENGINE	TRANS	TRIM	DESCRIPTION
	1HC32NC-VAA	AR	2, 3, 6, 7	L	53, 55, 13, 15, 17			*AL	[A6]
		AR	2, 3, 6, 7	L	13, 15, 17, 53, 55			*E7	[E7]
		AR	2, 3, 6, 7	L	15, 17, 53, 55, 13			*F7	[F7]
17									HANDLE, Grab
	68014364AA	1	2, 3, 6, 7	L	13, 15, 17, 53, 55				With [CSZ] Rear Passenger Assist Handles
		1	2, 3, 6, 7	L	13, 15, 17, 53, 55				With [CSQ] Right Rear Assist Handle
		1	2, 3, 6, 7	L	13, 15, 17				With [XJY] Cargo Partition With Sliding Door
18	06104154AA	2	2, 3, 6, 7	L	13, 15, 17, 53, 55				SCREW
19									COVER
	1HD18XDVAA	1	2, 3, 6, 7	L	13, 15, 17, 53, 55			*A6	[A6] C-Pillar Bottom
		1	2, 3, 6, 7	L	13, 15, 17, 53, 55			*E7	[E7] C-Pillar Bottom
		1	2, 3, 6, 7	L	13, 15, 17, 53, 55			*F7	[F7] C-Pillar Bottom
	1HD19XDVAA	4	2, 3, 6, 7	L	13, 15, 17, 53, 55			*E7	[E7] D-Pillar Bottom,With Ventilation
		4	2, 3, 6, 7	L	13, 15, 17, 53, 55			*F7	[F7] D-Pillar Bottom,With Ventilation
	1HD20XDVAA	6	2, 3, 6, 7	L	55, 13, 15, 17, 53			*A6	[A6] D-Pillar Bottom
		6	2, 3, 6, 7	L	13, 15, 17, 53, 55			*E7	[E7] D-Pillar Bottom
		4	2, 3, 6, 7	L	13, 15, 17, 53, 55			*A6	[A6] D-Pillar Bottom,With Ventilation
		6	2, 3, 6, 7	L	13, 15, 17, 53, 55			*F7	[F7] D-Pillar Bottom
20	68014473AA	1	2, 3, 6, 7	L	13, 53				FILLER
21	68014360AA	4	2, 3, 6, 7	L					CLAMP

SPRINTER (VB)

SERIES	LINE	BODY	ENGINE	TRANSMISSION
L = LOWLINE	3 = HD DODGE 2WD 2 = Med. Duty DODGE 2WD	03 = CAB CHASSIS WHEEL BASE 3 05 = CAB CHASSIS WHEEL BASE 5 13 = 119 WB 53 = 119 WB 15 = VAN WHEEL BASE 5 55 = WAGON WHEEL BASE 5 17 = VAN WHEEL BASE 7	EG2 = 3.5L V6 Gas Engine EXM = 3.0L V6 Turbo Diesel Engine	DGZ = 5-Speed Auto W5A380 Transmission

AR = use ase required - = Non illustrrated part

<< RETURN TO GROUP INDEX

Inner Paneling, Roof, Low Roof
Figure IVB-240

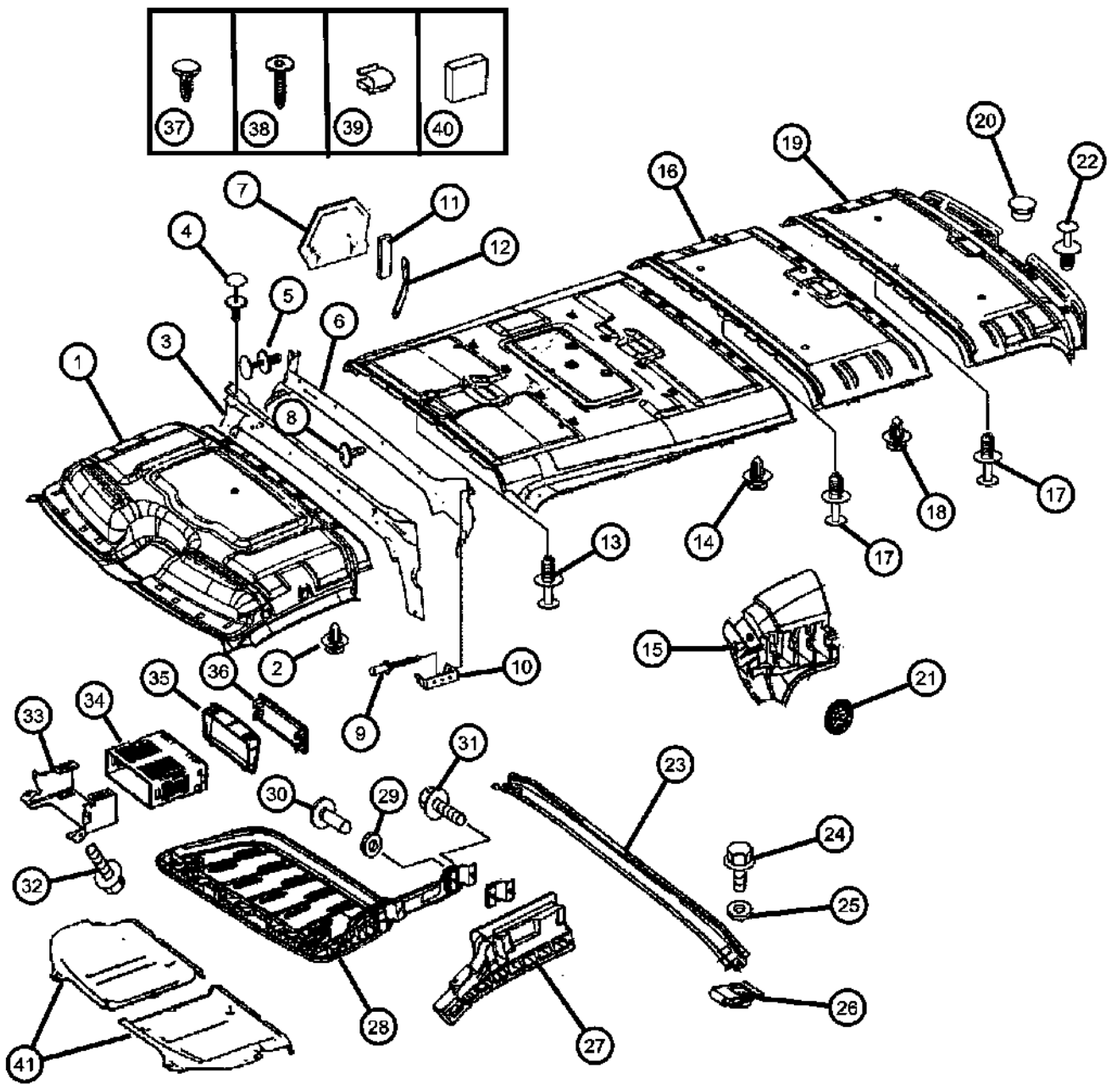

ITEM	PART NUMBER	QTY	LINE	SERIES	BODY	ENGINE	TRANS	TRIM	DESCRIPTION
Sales Codes [CJ4] = Side Front Air Bag [CK7] = Front Overhead Storage Bin [GWA] = Sunroof									
1									HEADLINER, Front
	1HA89ADVAA	1	2, 3, 6, 7	L				*A6	[A4]
		1	2, 3, 6, 7	L				*F7	[A4]
	1HA89TDVAA	1	2, 3, 6, 7	L				*F7	[A7]
		1	2, 3, 6, 7	L	13, 15, 17, 53, 55			*E7	[A4]
		1	2, 3, 6, 7	L				*A6	[A7]
	1HA90ADVAA	1	2, 3, 6, 7	L				*F7	[A4] , With [CK7] [GWA]
	1HA90TDVAA	1	2, 3, 6, 7	L				*A6	[A7] , With [CK7] [GWA]
		1	2, 3, 6, 7	L	13, 15, 17, 53, 55			*E7	[A7]
		1	2, 3, 6, 7	L				*A6	[A4] , With [CK7] [GWA]
		1	2, 3, 6, 7	L				*E7	[A4] , With [CK7] [GWA]
		1	2, 3, 6, 7	L				*E7	[A7] , With [CK7] [GWA]
		1	2, 3, 6, 7	L				*F7	[A7] , With [CK7] [GWA]
	1HA91ADVAA	1	3, 7	L	03, 05			*E7	[A4] , With [GWA]
		1	3, 7	L	03, 05			*F7	[A4] , With [GWA]
		1	2, 6	L	13, 53			*A6	[A4] , With [GWA]
	1HA91TDVAA	1	3, 7	L	03, 05			*E7	[A7] , With [GWA]
		1	3, 7	L	03, 05			*F7	[A7] , With [GWA]
		1	2, 6	L	13, 53			*A6	[A7] , With [GWA]
	1HA92ADVAA	1	2, 3, 6, 7	L	13, 15, 17, 53, 55			*A6	[A4] , With [CK7]
		1	2, 3, 6, 7	L	13, 15, 17, 53, 55			*E7	[A4] , With [CK7]
		1	2, 3, 6, 7	L	13, 15, 17, 53, 55			*F7	[A4] , With [CK7]
	1HA92KDVAA	1	2, 3, 6, 7	L				*E7	[DV] , With [CK7]
		1	2, 3, 6, 7	L	13, 15, 17, 53, 55			*A6	[DV] , With [CK7]
		1	6, 7, 2, 3	L	13, 15, 17, 53, 55			*F7	[DV] , With [CK7]
	1HA92TDVAA	1	2, 3, 6, 7	L				*A6	[A7] , With [CK7]

SPRINTER (VB)

SERIES	LINE	BODY	ENGINE	TRANSMISSION
L = LOWLINE	3 = HD DODGE 2WD 2 = Med. Duty DODGE 2WD	03 = CAB CHASSIS WHEEL BASE 3 05 = CAB CHASSIS WHEEL BASE 5 13 = 119 WB 53 = 119 WB 15 = VAN WHEEL BASE 5 55 = WAGON WHEEL BASE 5 17 = VAN WHEEL BASE 7	EG2 = 3.5L V6 Gas Engine EXM = 3.0L V6 Turbo Diesel Engine	DGZ = 5-Speed Auto W5A380 Transmission

Inner Paneling, Roof, Low Roof
Figure IVB-240

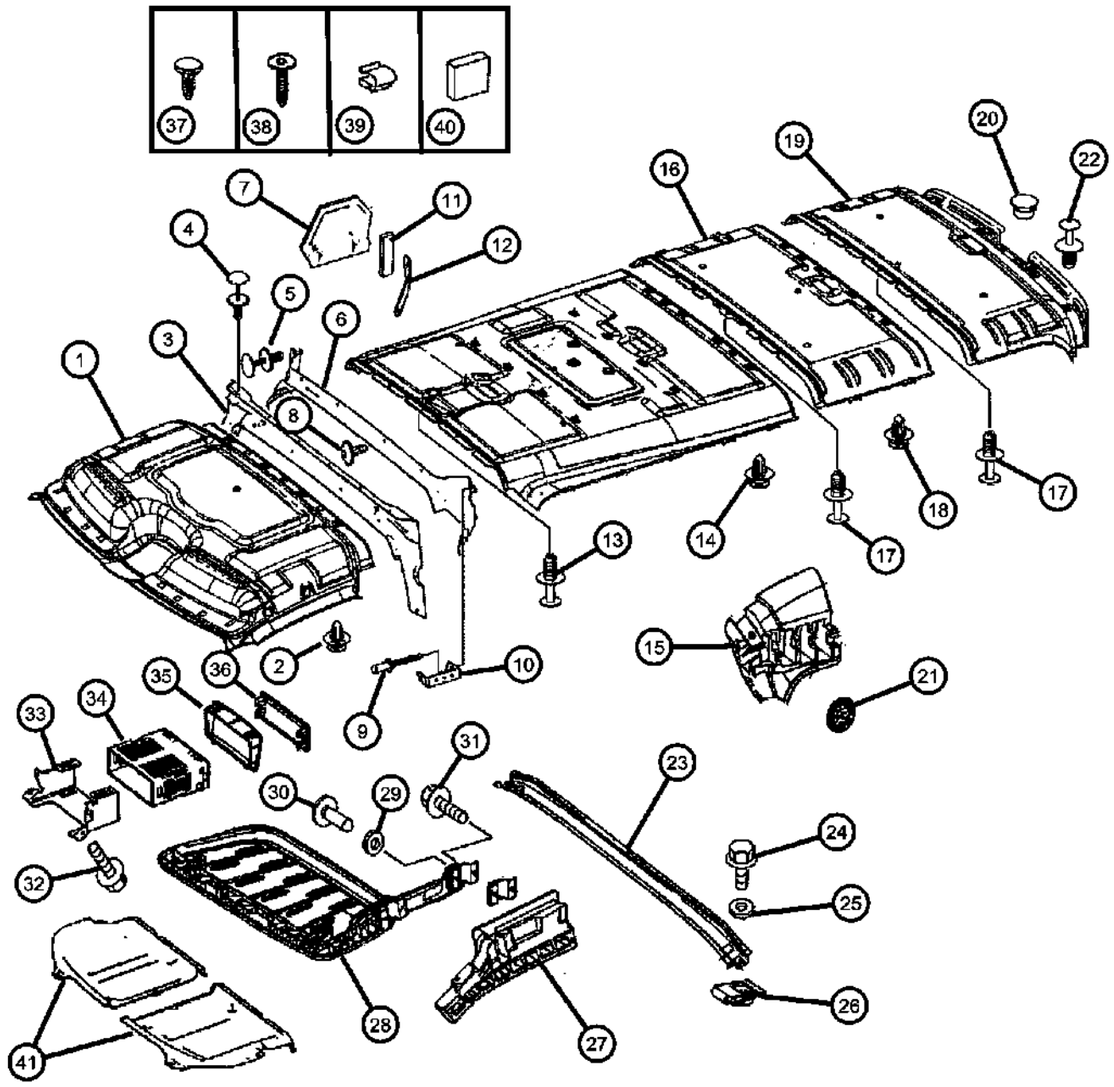

ITEM	PART NUMBER	QTY	LINE	SERIES	BODY	ENGINE	TRANS	TRIM	DESCRIPTION
		1	2, 3, 6, 7	L				*E7	[A7] , With [CK7]
		1	2, 3, 6, 7	L				*F7	[A7] , With [CK7]
	1HA93ADVAA	1	2, 3, 6, 7	L				*E7	[A4] , With [CJ4] [GWA]
		1	2, 3, 6, 7	L				*F7	[A4] , With [CJ4] [GWA]
	1HA93TDVAA	1	2, 3, 6, 7	L				*A6	[A7] , With [CJ4] [GWA]
		1	2, 3, 6, 7	L				*E7	[A7] , With [CJ4] [GWA]
		1	2, 3, 6, 7	L				*F7	[A7] , With [CJ4] [GWA]
		1	2, 3, 6, 7	L				*A6	[A4] , With [CJ4] [GWA]
	1HA94ADVAA	1	2, 3, 6, 7	L				*A6	[A4] , With [CJ4] [CK7] [GWA]
	1HA94TDVAA	1	2, 3, 6, 7	L				*A6	[A7] , With [CJ4] [CK7] [GWA]
		1	2, 3, 6, 7	L				*E7	[A7] , With [CJ4] [CK7] [GWA]
		1	3, 6, 7, 2	L				*F7	[A7] , With [CJ4] [CK7] [GWA]
		1	2, 3, 6, 7	L				*E7	[A4] , With [CJ4] [CK7] [GWA]
		1	2, 3, 6, 7	L				*F7	[A4] , With [CJ4] [CK7] [GWA]
	1HA95ADVAA	1	2, 3, 6, 7	L				*A6	[A4] , With [CJ4] [CK7]
	1HA95TDVAA	1	2, 3, 6, 7	L				*A6	[A7] , With [CJ4] [CK7]
		1	2, 3, 6, 7	L				*E7	[A4] , With [CJ4] [CK7]
		1	2, 3, 6, 7	L				*F7	[A4] , With [CJ4] [CK7]
		1	2, 3, 6, 7	L				*E7	[A7] , With [CJ4] [CK7]
		1	2, 3, 6, 7	L				*F7	[A7] , With [CJ4] [CK7]
	1HA96TDVAA	1	2, 3, 6, 7	L				*A6	[A7] , With [CJ4]
	1HA96ADVAA	1	2, 3, 6, 7	L				*A6	[A4] , With [CJ4]
		1	2, 3, 6, 7	L				*E7	[A4] , With [CJ4]
		1	2, 3, 6, 7	L				*F7	[A4] , With [CJ4]
		1	2, 3, 6, 7	L				*E7	[A7] , With [CJ4]
		1	2, 3, 6, 7	L				*F7	[A7] , With [CJ4]
2	05125569AA	4	2, 3, 6, 7	L	13, 15, 17, 53, 55				CLIP, Headlining
3									PANEL, Headliner
	1HC42XDVAA	1	2, 3, 6, 7	L	13, 15, 17			*A6	
		1	6, 7, 2, 3	L	13, 15, 17			*E7	
		1	2, 3, 6, 7	L	13, 15, 17			*F7	

SPRINTER (VB)

SERIES	LINE	BODY	ENGINE	TRANSMISSION
L = LOWLINE	3 = HD DODGE 2WD 2 = Med. Duty DODGE 2WD	03 = CAB CHASSIS WHEEL BASE 3 05 = CAB CHASSIS WHEEL BASE 5 13 = 119 WB 53 = 119 WB 15 = VAN WHEEL BASE 5 55 = WAGON WHEEL BASE 5 17 = VAN WHEEL BASE 7	EG2 = 3.5L V6 Gas Engine EXM = 3.0L V6 Turbo Diesel Engine	DGZ = 5-Speed Auto W5A380 Transmission

Inner Paneling, Roof, Low Roof
Figure IVB-240

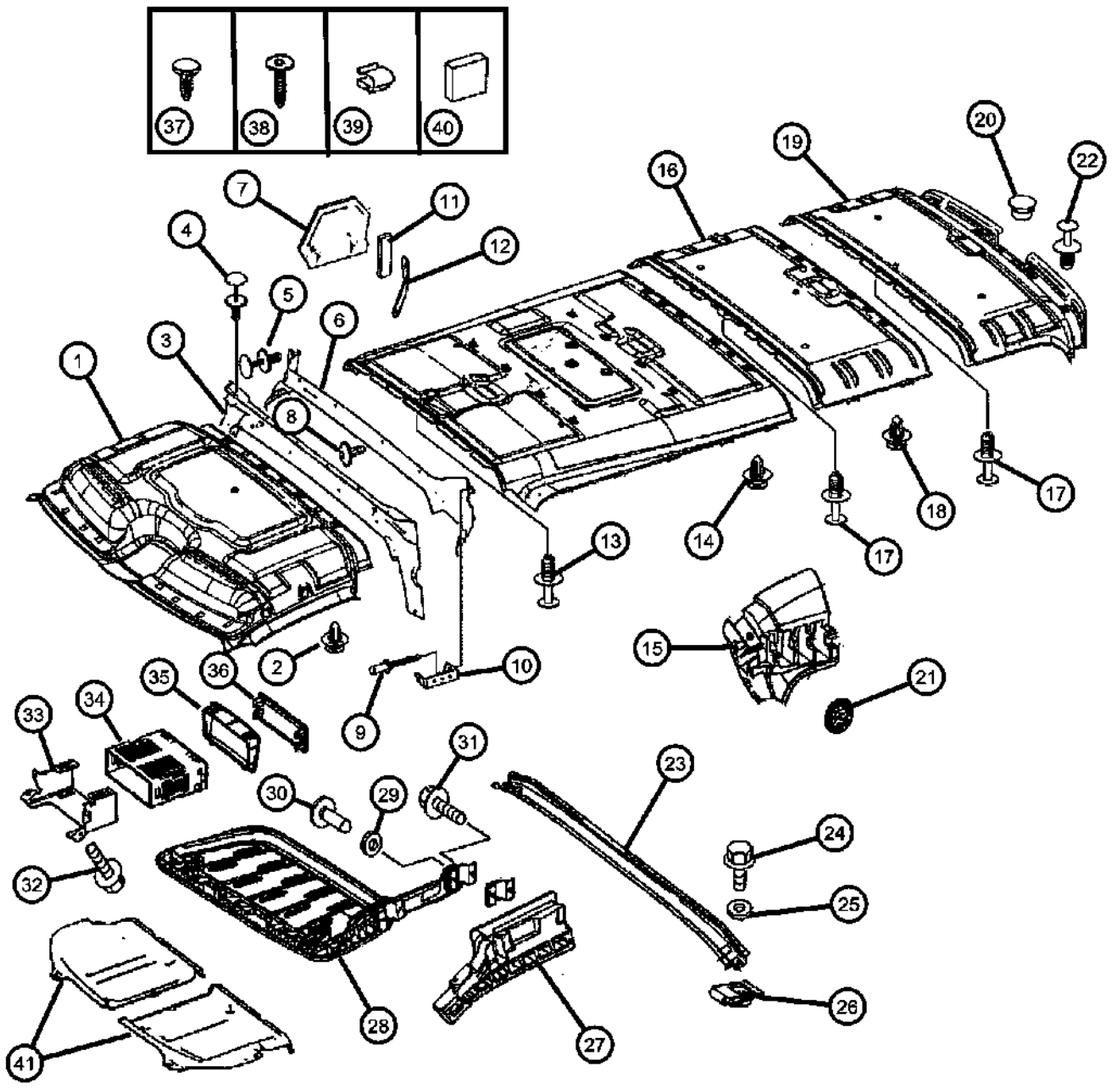

ITEM	PART NUMBER	QTY	LINE	SERIES	BODY	ENGINE	TRANS	TRIM	DESCRIPTION
4	68006483AA	18	2, 3, 6, 7	L	13, 15, 17, 53, 55				RIVET
5									RIVET
	1HC04NC-VAA	2	2, 3, 6, 7	L				*A6	
		2	2, 3, 6, 7	L				*E7	
		2	2, 3, 6, 7	L				*F7	
6									COVER, Roof Header
	1HC00XDVAA	1	2, 3, 6, 7	L	13, 15, 17			*A6	With [GK9]
		1	2, 3, 6, 7	L	13, 15, 17			*F7	With [GK9]
	1HC01XDVAA	1	7, 2, 3, 6	L	13, 15, 17, 53, 55			*A6	With [GKA] [GKE]
		1	2, 3, 6, 7	L	13, 15, 17, 53, 55			*E7	With [GKA] [GKE]
		1	2, 3, 6, 7	L	13, 15, 17			*E7	With [GK9]
		1	2, 3, 6, 7	L	13, 15, 17, 53, 55			*F7	With [GKA] [GKE]
	1HC02XDVAA	1	2, 3, 6, 7	L	13, 15, 17, 53, 55			*A6	With [GKA]
		1	2, 3, 6, 7	L	13, 15, 17, 53, 55			*E7	With [GKA]
		1	2, 3, 6, 7	L	13, 15, 17, 53, 55			*F7	With [GKA]
	1HC03XDVAA	1	2, 3, 6, 7	L	13, 15, 17, 53, 55			*A6	With [GKE]
		1	2, 3, 6, 7	L	13, 15, 17, 53, 55			*E7	With [GKE]
		1	2, 3, 6, 7	L	17, 53, 55, 13, 15			*F7	With [GKE]
7	68014282AA	1	2, 3, 6, 7	L	13, 15, 17				COVER
8									RIVET, Plastic
	1AR96DX9AA	1	2, 3, 6, 7	L	13, 15, 17, 53, 55			*A6	[AA]
		1	2, 3, 6, 7	L	13, 15, 17, 53, 55			*E7	[AA]
		1	2, 3, 6, 7	L	13, 15, 17, 53, 55			*F7	[AA]
		1	2, 3, 6, 7	L	13, 15, 17, 53, 55			*E7	[DX]
		1	2, 3, 6, 7	L	13, 15, 17, 53, 55			*F7	[DX]

SPRINTER (VB)

SERIES	LINE	BODY	ENGINE	TRANSMISSION
L = LOWLINE	3 = HD DODGE 2WD 2 = Med. Duty DODGE 2WD	03 = CAB CHASSIS WHEEL BASE 3 05 = CAB CHASSIS WHEEL BASE 5 13 = 119 WB 53 = 119 WB 15 = VAN WHEEL BASE 5 55 = WAGON WHEEL BASE 5 17 = VAN WHEEL BASE 7	EG2 = 3.5L V6 Gas Engine EXM = 3.0L V6 Turbo Diesel Engine	DGZ = 5-Speed Auto W5A380 Transmission

Inner Paneling, Roof, Low Roof
Figure IVB-240

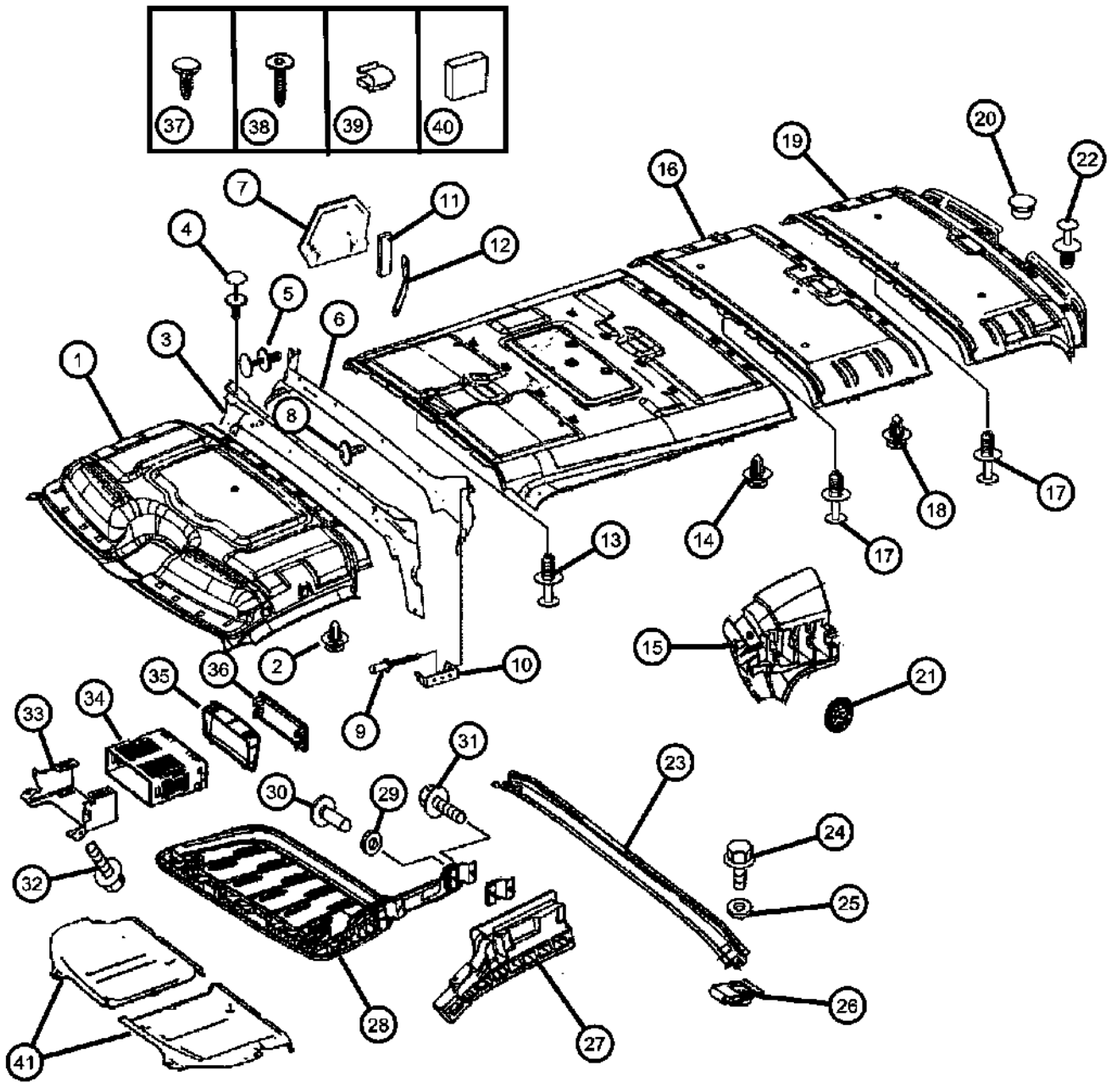

ITEM	PART NUMBER	QTY	LINE	SERIES	BODY	ENGINE	TRANS	TRIM	DESCRIPTION
		1	2, 3, 6, 7	L	13, 15, 17, 53, 55			*A6	[DX]
9	05134061AA	8	2, 3, 6, 7	L	13, 15, 17, 53, 55				RIVET
10	68014184AA	2	2, 3, 6, 7	L					BRACKET
11	68014185AA	1	2, 3, 6, 7	L	13, 15, 17, 53, 55				SPACER
12	68014186AA	1	2, 3, 6, 7	L	13, 15, 17, 53, 55				BRACKET
13									RIVET, Plastic
	1AR96DX9AA	8	2, 3, 6, 7	L	53, 55, 13, 15, 17			*A6	
		8	2, 3, 6, 7	L	13, 15, 17, 53, 55			*E7	
		8	2, 3, 6, 7	L	13, 15, 17, 53, 55			*F7	
14	05125569AA	4	7, 2, 3, 6	L	13, 15, 17, 53, 55				CLIP, Headlining
15									INSULATION, Roof Headliner
	1JE54NCVAA	1	2, 3, 6, 7	L	13, 15, 17, 53, 55			*AL	Left
		1	2, 3, 6, 7	L	13, 15, 17, 53, 55			*F7	Left
		1	2, 3, 6, 7	L	13, 15, 17, 53, 55			*E7	Left
	1JE55NCVAA	1	2, 3, 6, 7	L	13, 15, 17, 53, 55			*E7	Right
		1	2, 3, 6, 7	L	13, 15, 17, 53, 55			*F7	Right
		1	2, 3, 6, 7	L	53, 55, 13, 15, 17			*AL	Right
16									HEADLINER, Rear
	1HC33XDVAA	2	2, 3, 6, 7	L	13, 53			*A6	
		2	2, 3, 6, 7	L	13, 53			*E7	
		2	2, 3, 6, 7	L	13, 53			*F7	
17									RIVET, Plastic
	1AR96DX9AA	8	2, 3, 6, 7	L	13, 15, 17, 53, 55			*A6	
		8	2, 3, 6, 7	L	13, 15, 17, 53, 55			*E7	

SPRINTER (VB)

SERIES	LINE	BODY	ENGINE	TRANSMISSION
L = LOWLINE	3 = HD DODGE 2WD 2 = Med. Duty DODGE 2WD	03 = CAB CHASSIS WHEEL BASE 3 05 = CAB CHASSIS WHEEL BASE 5 13 = 119 WB 53 = 119 WB 15 = VAN WHEEL BASE 5 55 = WAGON WHEEL BASE 5 17 = VAN WHEEL BASE 7	EG2 = 3.5L V6 Gas Engine EXM = 3.0L V6 Turbo Diesel Engine	DGZ = 5-Speed Auto W5A380 Transmission

Inner Paneling, Roof, Low Roof
Figure IVB-240

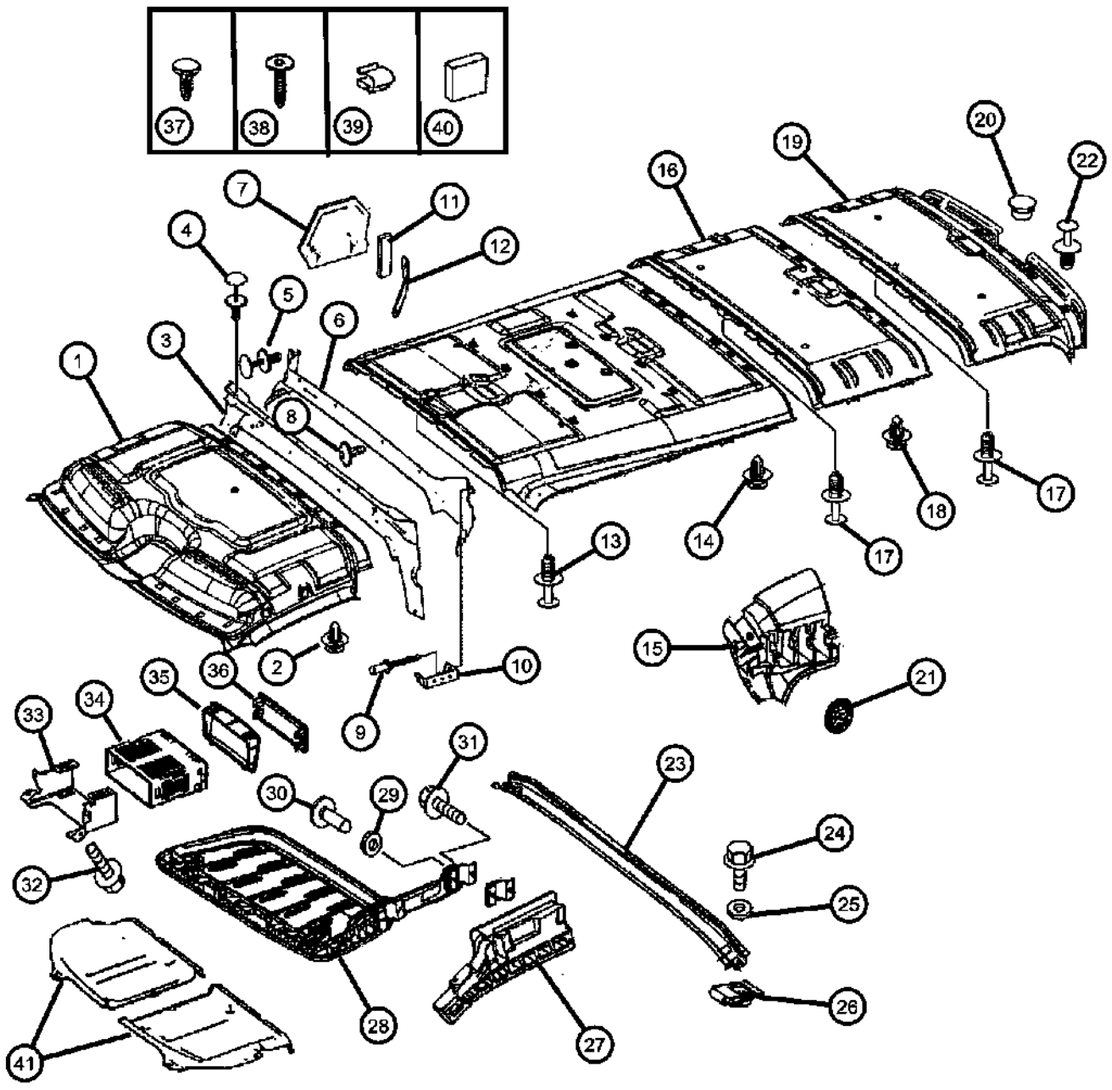

ITEM	PART NUMBER	QTY	LINE	SERIES	BODY	ENGINE	TRANS	TRIM	DESCRIPTION
		8	2, 3, 6, 7	L	13, 15, 17, 53, 55			*F7	
18	05125569AA	4	2, 3, 6, 7	L	13, 15, 17, 53, 55				CLIP, Headlining
19									HEADLINER, Rear
	1HC36XDVAA	1	2, 3, 6, 7	L	13, 53			*A6	
		1	2, 3, 6, 7	L	13, 53			*E7	
		1	2, 3, 6, 7	L	13, 53			*F7	
20									CAP
	1HC40NC-VAA	4	7, 2, 3, 6	L	13, 15, 17, 53, 55			*A6	
		4	2, 3, 6, 7	L	13, 15, 17, 53, 55			*E7	
		4	2, 3, 6, 7	L	13, 15, 17, 53, 55			*F7	
21	68004747AA	2	2, 3, 6, 7	L	13, 15, 17, 53, 55				WASHER, Spring
22									RIVET, RIVET
	1HC32NC-VAA	AR	2, 3, 6, 7	L	13, 15, 17, 53, 55			*AL	
		AR	2, 3, 6, 7	L	13, 15, 17, 53, 55			*E7	
		AR	2, 3, 6, 7	L	13, 15, 17, 53, 55			*F7	
23	68014272AA	1	2, 3, 6, 7	L	13, 15, 17				BOW, Roof
24	68010354AA	1	2, 3, 6, 7	L	55, 13, 15, 17, 53				SCREW
25	05104639AA	2	2, 3, 6, 7	L	13, 15, 17, 53, 55				WASHER
26	05133420AA	3	2, 3, 6, 7	L	13, 15, 17, 53, 55				NUT, Clip-On
27									INSULATION
	68014293AA	1	2, 6	L	13, 15, 17, 53, 55				Left
	68014292AA	1	2, 6	L	13, 15, 17, 53, 55				Right
28									TRAY, Cargo
	1HA97XDVAA	1	2, 3, 6, 7	L				*A6	Left
		1	2, 3, 6, 7	L				*E7	Left

SPRINTER (VB)

SERIES	LINE	BODY	ENGINE	TRANSMISSION
L = LOWLINE	3 = HD DODGE 2WD 2 = Med. Duty DODGE 2WD	03 = CAB CHASSIS WHEEL BASE 3 05 = CAB CHASSIS WHEEL BASE 5 13 = 119 WB 53 = 119 WB 15 = VAN WHEEL BASE 5 55 = WAGON WHEEL BASE 5 17 = VAN WHEEL BASE 7	EG2 = 3.5L V6 Gas Engine EXM = 3.0L V6 Turbo Diesel Engine	DGZ = 5-Speed Auto W5A380 Transmission

AR = use ase required - = Non illustrrated part

<< RETURN TO GROUP INDEX

Inner Paneling, Roof, Low Roof
Figure IVB-240

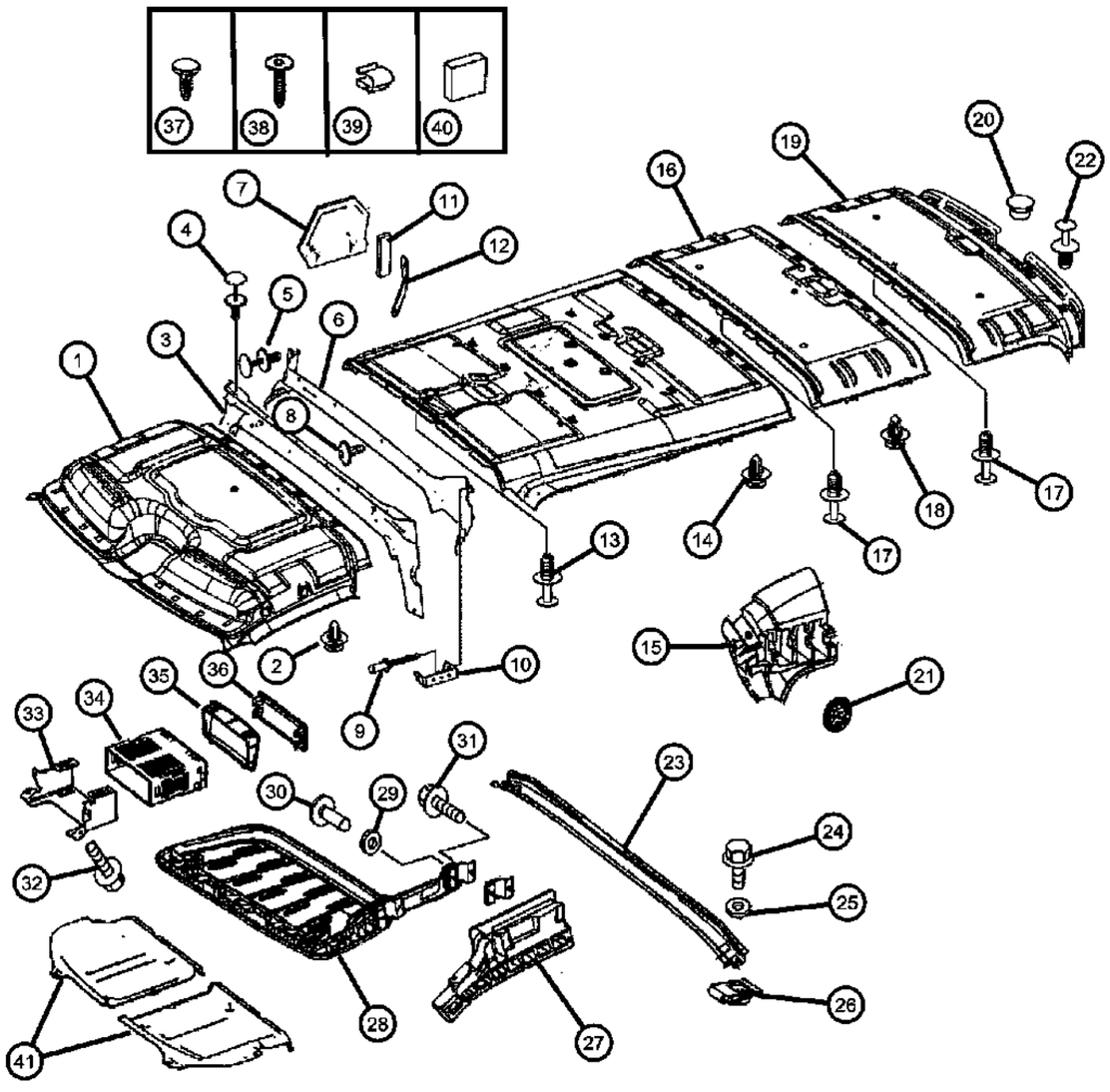

ITEM	PART NUMBER	QTY	LINE	SERIES	BODY	ENGINE	TRANS	TRIM	DESCRIPTION
		1	2, 3, 6, 7	L				*F7	Left
	1HA98XDVAA	1	2, 3, 6, 7	L				*A6	Right
		1	2, 3, 6, 7	L				*E7	Right
		1	2, 3, 6, 7	L				*F7	Right
29									WASHER
	05133908AA	4	3, 7	L	03, 05				
		4	3, 6, 7, 2	L	13, 15, 17, 53, 55				
30									SCREW
	05161856AB	1	3, 7	L	03, 05				
		1	2, 3, 6, 7	L	13, 15, 17, 53, 55				
31	68004879AA	8	2, 3, 6, 7	L					SCREW
32	06104120AA	4	2, 3, 6, 7	L	13, 15, 17, 53, 55				SCREW, Hex Head, M6x12
33	68014285AA	1	2, 3, 6, 7	L					BRACKET
34									BRACKET
	1HB93CSTAA	1	3, 7	L	03, 05			*A6	
		1	3, 7	L	03, 05			*E7	
		1	3, 7	L	03, 05			*F7	
		1	2, 3, 6, 7	L	13, 15, 17, 53, 55			*A6	
		1	2, 3, 6, 7	L	13, 15, 17, 53, 55			*E7	
		1	2, 3, 6, 7	L	13, 15, 17, 53, 55			*F7	
35									BEZEL
	1HA99XDVAA	1	2, 3, 6, 7	L				*A6	
		1	2, 3, 6, 7	L				*E7	
		1	2, 3, 6, 7	L				*F7	
36									COVER, COVER
	1HB94CSTAA	4	2, 3, 6, 7	L				*E7	
		4	2, 3, 6, 7	L				*A6	
		4	6, 7, 2, 3	L				*F7	

SPRINTER (VB)

SERIES	LINE	BODY	ENGINE	TRANSMISSION
L = LOWLINE	3 = HD DODGE 2WD 2 = Med. Duty DODGE 2WD	03 = CAB CHASSIS WHEEL BASE 3 05 = CAB CHASSIS WHEEL BASE 5 13 = 119 WB 53 = 119 WB 15 = VAN WHEEL BASE 5 55 = WAGON WHEEL BASE 5 17 = VAN WHEEL BASE 7	EG2 = 3.5L V6 Gas Engine EXM = 3.0L V6 Turbo Diesel Engine	DGZ = 5-Speed Auto W5A380 Transmission

Inner Paneling, Roof, Low Roof
Figure IVB-240

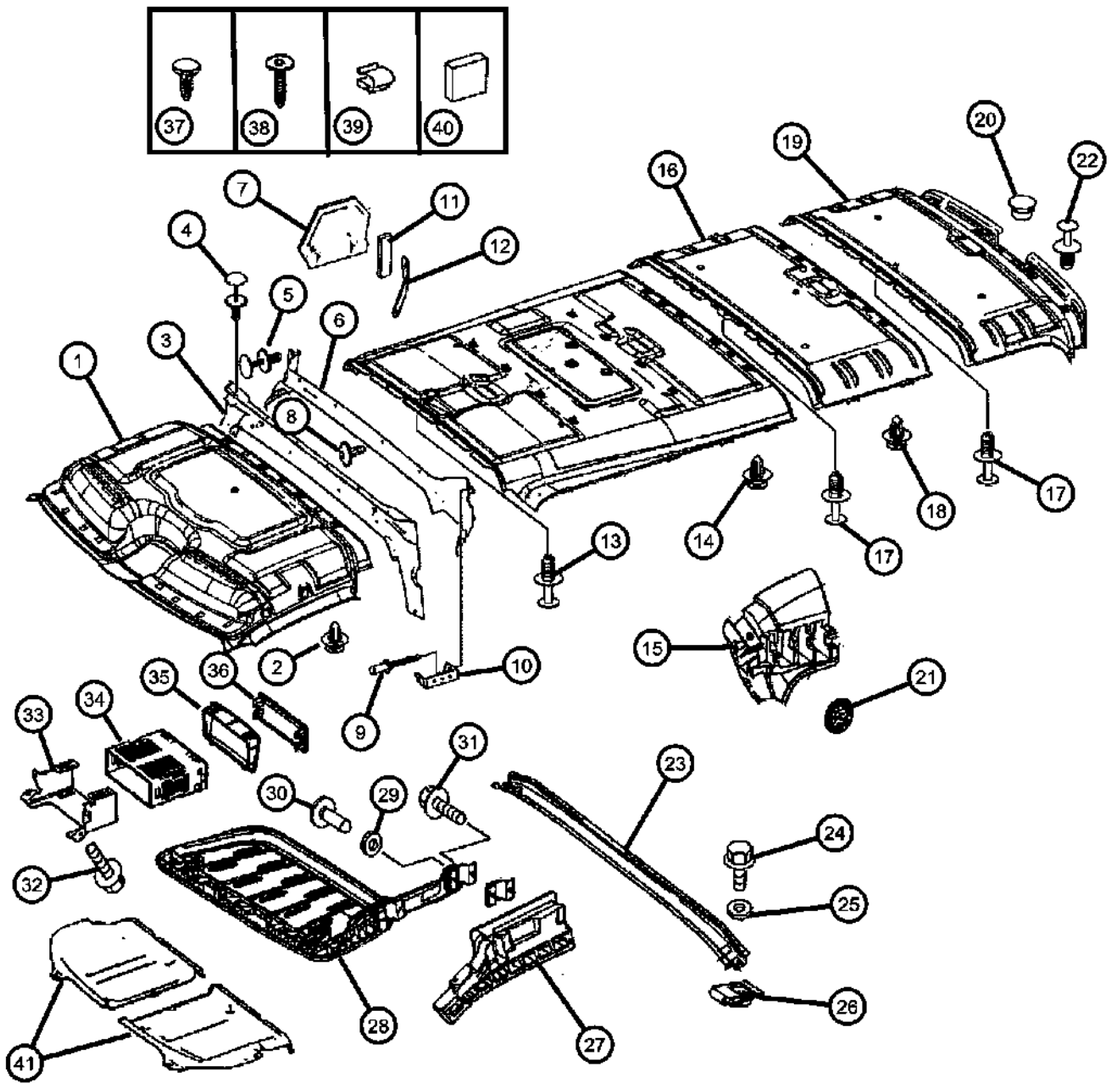

ITEM	PART NUMBER	QTY	LINE	SERIES	BODY	ENGINE	TRANS	TRIM	DESCRIPTION
37	05103817AA	2	2, 3, 6, 7	L	13, 15, 17, 53, 55				PLUG
38	68009926AA	10	2, 3, 6, 7	L	13, 15, 17, 53, 55				SCREW
39	68014280AA	5	2, 3, 6, 7	L	13, 15, 17, 53, 55				CLIP
40	68014291AA	2	2, 3, 6, 7	L	13, 15, 17, 53, 55				INSULATOR
41									BELLY PAN, Front
	1JF80AA7AA	1	2, 3, 6, 7	L	13, 15, 17, 53, 55			*AL	Right
		1	2, 3, 6, 7	L	13, 15, 17, 53, 55			*E7	Right
		1	2, 3, 6, 7	L	13, 15, 17, 53, 55			*F7	Right
	1JF81AA7AA	1	2, 3, 6, 7	L	13, 15, 17, 53, 55			*AL	Left
		1	2, 3, 6, 7	L	13, 15, 17, 53, 55			*E7	Left
		1	2, 3, 6, 7	L	55, 13, 15, 17, 53			*F7	Left

SPRINTER (VB)

SERIES	LINE	BODY	ENGINE	TRANSMISSION
L = LOWLINE	3 = HD DODGE 2WD 2 = Med. Duty DODGE 2WD	03 = CAB CHASSIS WHEEL BASE 3 05 = CAB CHASSIS WHEEL BASE 5 13 = 119 WB 53 = 119 WB 15 = VAN WHEEL BASE 5 55 = WAGON WHEEL BASE 5 17 = VAN WHEEL BASE 7	EG2 = 3.5L V6 Gas Engine EXM = 3.0L V6 Turbo Diesel Engine	DGZ = 5-Speed Auto W5A380 Transmission

Inner Paneling, Roof, High Roof
Figure IVB-245

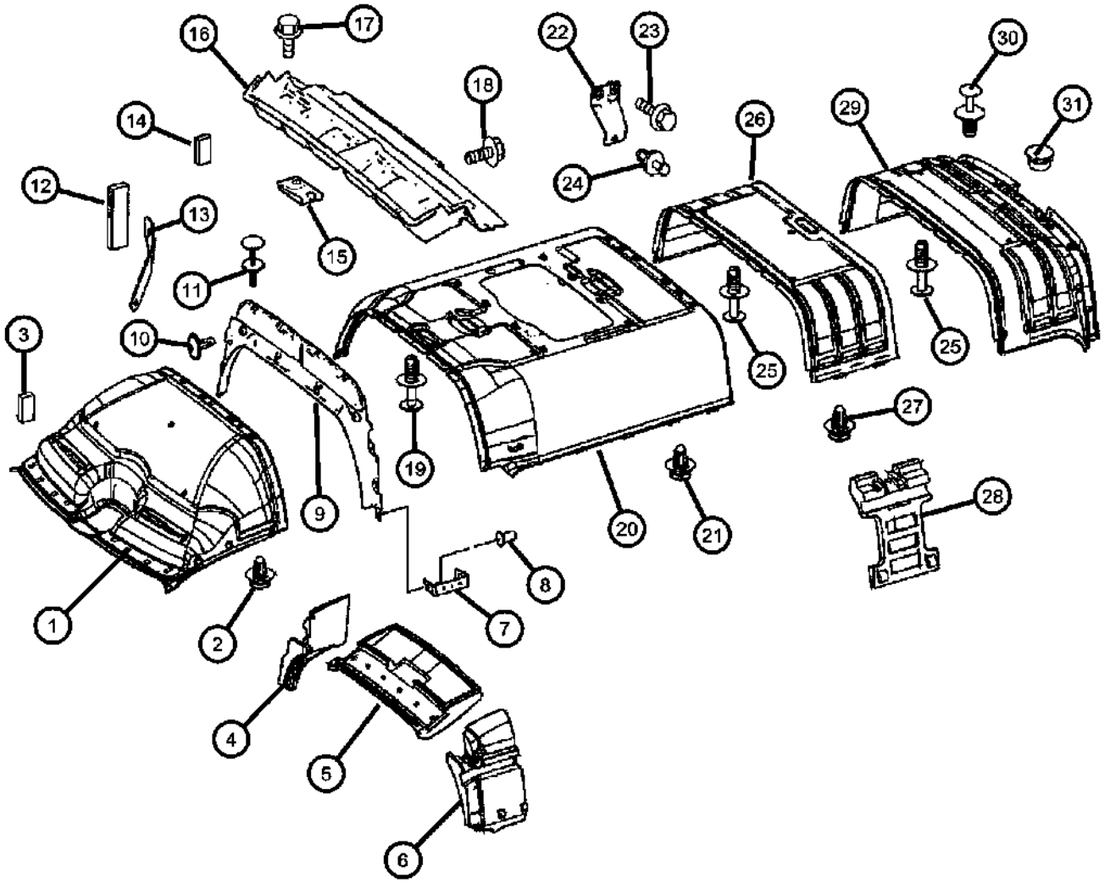

ITEM	PART NUMBER	QTY	LINE	SERIES	BODY	ENGINE	TRANS	TRIM	DESCRIPTION
1									HEADLINER, Front
	1HA89ADVAA	1	2, 3, 6, 7	L				*A6	[A4]
		1	6, 7, 2, 3	L				*E7	[A4]
		1	2, 3, 6, 7	L				*F7	[A4]
	1HA89TDVAA	1	2, 3, 6, 7	L				*A6	[A7]
		1	2, 3, 6, 7	L				*E7	[A7]
		1	2, 3, 6, 7	L				*F7	[A7]
	1HA92ADVAA	1	2, 3, 6, 7	L				*F7	[A4] , With [CK7]
		1	2, 3, 6, 7	L				*A6	[A4] , With [CK7]
		1	2, 3, 6, 7	L				*E7	[A4] , With [CK7]
	1HA92KDVAA	1	2, 3, 6, 7	L				*A6	[DV] , With [CK7]
		1	2, 3, 6, 7	L				*E7	[DV] , With [CK7]
		1	2, 3, 6, 7	L				*F7	[DV] , With [CK7]
	1HA92TDVAA	1	2, 3, 6, 7	L				*A6	[A7] , With [CK7]
		1	2, 3, 6, 7	L				*E7	[A7] , With [CK7]
		1	2, 3, 6, 7	L				*F7	[A7] , With [CK7]
	1HA95ADVAA	1	2, 3, 6, 7	L				*A6	[A4] , With [CJ4] [CK7]
		1	2, 3, 6, 7	L				*E7	[A4] , With [CJ4] [CK7]
		1	2, 3, 6, 7	L				*F7	[A4] , With [CJ4] [CK7]
	1HA95TDVAA	1	2, 3, 6, 7	L				*A6	[A7] , With [CJ4] [CK7]
		1	2, 3, 6, 7	L				*E7	[A7] , With [CJ4] [CK7]
		1	2, 3, 6, 7	L				*F7	[A7] , With [CJ4] [CK7]
	1HA96ADVAA	1	2, 3, 6, 7	L				*A6	[A4] , With [CJ4]
		1	2, 3, 6, 7	L				*E7	[A4] , With [CJ4]
	1HA96TDVAA	1	2, 3, 6, 7	L				*A6	[A7] , With [CJ4]
		1	2, 3, 6, 7	L				*E7	[A7] , With [CJ4]
		1	2, 3, 6, 7	L				*F7	[A7] , With [CJ4]
		1	2, 3, 6, 7	L				*F7	[A4] , With [CJ4]
	1HB96KDVAA	1	2, 3, 6, 7	L	13, 15, 17, 53, 55			*A6	[DV] , With [CK7]
		1	2, 3, 6, 7	L	13, 15, 17, 53, 55			*E7	[DV] , With [CK7]
		1	2, 3, 6, 7	L	13, 15, 17, 53, 55			*F7	[DV] , With [CK7]

SPRINTER (VB)

SERIES	LINE	BODY	ENGINE	TRANSMISSION
L = LOWLINE	3 = HD DODGE 2WD 2 = Med. Duty DODGE 2WD	03 = CAB CHASSIS WHEEL BASE 3 05 = CAB CHASSIS WHEEL BASE 5 13 = 119 WB 53 = 119 WB 15 = VAN WHEEL BASE 5 55 = WAGON WHEEL BASE 5 17 = VAN WHEEL BASE 7	EG2 = 3.5L V6 Gas Engine EXM = 3.0L V6 Turbo Diesel Engine	DGZ = 5-Speed Auto W5A380 Transmission

Inner Paneling, Roof, High Roof
Figure IVB-245

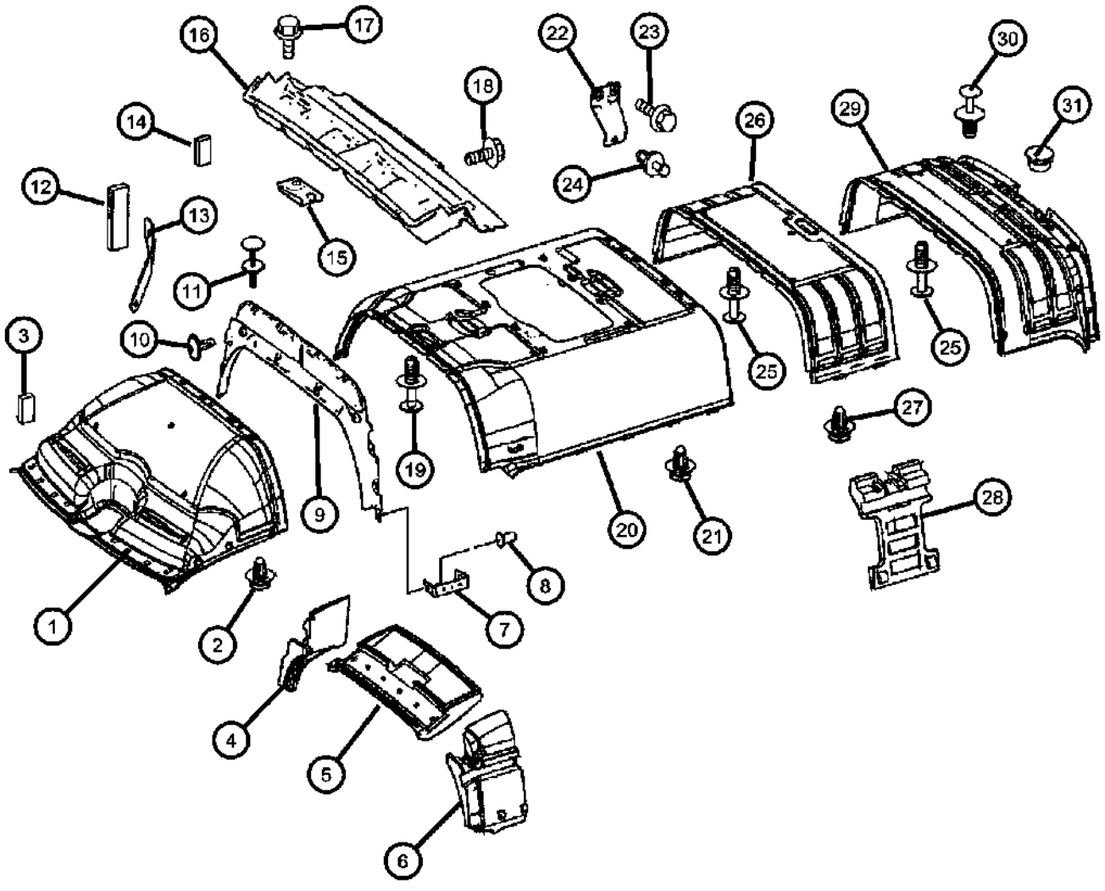

ITEM	PART NUMBER	QTY	LINE	SERIES	BODY	ENGINE	TRANS	TRIM	DESCRIPTION
	1HB96XDVAA	1	2, 3, 6, 7	L	13, 15, 17, 53, 55			*A6	[A4] , With [CK7]
		1	2, 3, 6, 7	L	13, 15, 17, 53, 55			*E7	[A7] , With [CK7]
		1	2, 3, 6, 7	L	13, 15, 17, 53, 55			*F7	[A4] , With [CK7]
		1	2, 3, 6, 7	L	13, 15, 17, 53, 55			*F7	[A7] , With [CK7]
	1HB97KDVAA	1	2, 3, 6, 7	L	13, 15, 17, 53, 55			*A6	[DV] , With [CK7] [CJ4]
		1	2, 3, 6, 7	L	13, 15, 17, 53, 55			*E7	[DV] , With [CK7] [CJ4]
		1	2, 3, 6, 7	L	13, 15, 17, 53, 55			*A6	[A7] , With [CK7]
		1	2, 3, 6, 7	L	13, 15, 17, 53, 55			*E7	[A4] , With [CK7]
	1HB97XDVAA	1	2, 3, 6, 7	L	13, 15, 17, 53, 55			*E7	[A4] , With [CK7] [CJ4]
		1	2, 3, 6, 7	L	13, 15, 17, 53, 55			*E7	[A7] , With [CK7] [CJ4]
		1	2, 3, 6, 7	L	13, 15, 17, 53, 55			*F7	[A4] , With [CK7] [CJ4]
		1	2, 3, 6, 7	L	13, 15, 17, 53, 55			*F7	[A7] , With [CK7] [CJ4]
		1	2, 3, 6, 7	L	13, 15, 17, 53, 55			*F7	[DV] , With [CK7] [CJ4]
		1	2, 3, 6, 7	L	13, 15, 17, 53, 55			*A6	[A4] , With [CK7] [CJ4]
		1	2, 3, 6, 7	L	13, 15, 17, 53, 55			*A6	[A7] , With [CK7] [CJ4]
	1HB98XDVAA	1	2, 3, 6, 7	L	13, 15, 17, 53, 55			*A6	[A4] , With [CJ4]
		1	2, 3, 6, 7	L	13, 15, 17, 53, 55			*A6	[A7] , With [CJ4]
		1	2, 3, 6, 7	L	13, 15, 17, 53, 55			*E7	[A4] , With [CJ4]
		1	2, 3, 6, 7	L	13, 15, 17, 53, 55			*E7	[A7] , With [CJ4]
	1HB98KDVAA	1	2, 3, 6, 7	L	13, 15, 17, 53, 55			*A6	[DV] , With [CJ4]
		1	2, 3, 6, 7	L	13, 15, 17, 53, 55			*E7	[DV] , With [CJ4]
		1	2, 3, 6, 7	L	13, 15, 17, 53, 55			*F7	[DV] , With [CJ4]

SPRINTER (VB)

SERIES	LINE	BODY	ENGINE	TRANSMISSION
L = LOWLINE	3 = HD DODGE 2WD 2 = Med. Duty DODGE 2WD	03 = CAB CHASSIS WHEEL BASE 3 05 = CAB CHASSIS WHEEL BASE 5 13 = 119 WB 53 = 119 WB 15 = VAN WHEEL BASE 5 55 = WAGON WHEEL BASE 5 17 = VAN WHEEL BASE 7	EG2 = 3.5L V6 Gas Engine EXM = 3.0L V6 Turbo Diesel Engine	DGZ = 5-Speed Auto W5A380 Transmission

Inner Paneling, Roof, High Roof
Figure IVB-245

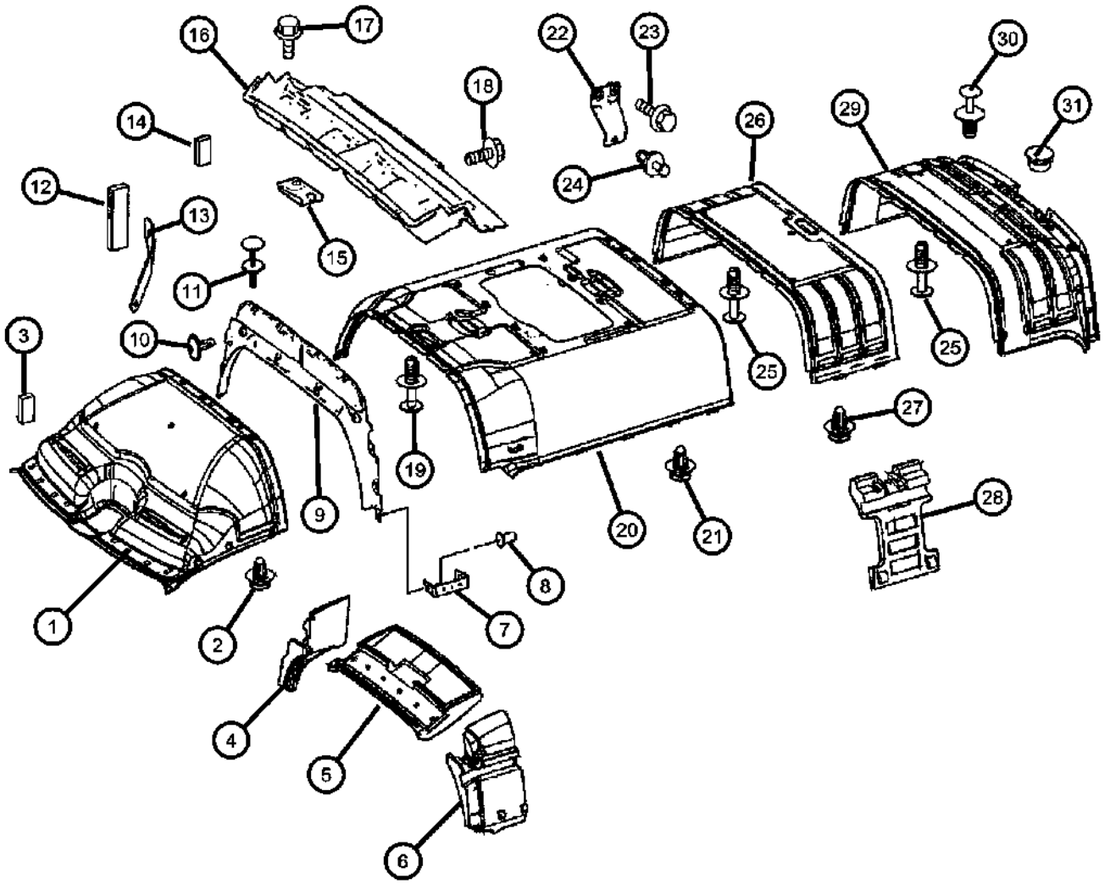

ITEM	PART NUMBER	QTY	LINE	SERIES	BODY	ENGINE	TRANS	TRIM	DESCRIPTION
	1HB99KDVAA	1	2, 3, 6, 7	L	13, 15, 17, 53, 55			*F7	[DV] , With [MWJ] or [MX2] or [MX1]
	1HB99XDVAA	1	2, 3, 6, 7	L	13, 15, 17, 53, 55			*A6	[A4] , With [MWJ] or [MX2] or [MX1]
		1	2, 3, 6, 7	L	13, 15, 17, 53, 55			*A6	[A7] , With [MWJ] or [MX2] or [MX1]
		1	2, 3, 6, 7	L	13, 15, 17, 53, 55			*F7	[A4] , With [CJ4]
		1	2, 3, 6, 7	L	13, 15, 17, 53, 55			*F7	[A7] , With [CJ4]
		1	2, 3, 6, 7	L	13, 15, 17, 53, 55			*A6	[DV] , With [MWJ] or [MX2] or [MX1]
		1	2, 3, 6, 7	L	13, 15, 17, 53, 55			*E7	[DV] , With [MWJ] or [MX2] or [MX1]
		1	2, 3, 6, 7	L	13, 15, 17, 53, 55			*E7	[A4] , With [MWJ] or [MX2] or [MX1]
		1	2, 3, 6, 7	L	13, 15, 17, 53, 55			*E7	[A7] , With [MWJ] or [MX2] or [MX1]
		1	2, 3, 6, 7	L	13, 15, 17, 53, 55			*F7	[A4] , With [MWJ] or [MX2] or [MX1]
		1	2, 3, 6, 7	L	13, 15, 17, 53, 55			*F7	[A7] , With [MWJ] or [MX2] or [MX1]
2	05125569AA	4	2, 3, 6, 7	L	13, 15, 17, 53, 55				CLIP, Headlining
3	68010358AA	2	2, 3, 6, 7	L	13, 15, 17, 53, 55				INSULATION
4									INSULATION
	68014302AA	1	2, 6	L	13, 15, 17, 53, 55				Center, Right
	68014303AA	1	2, 6	L	13, 15, 17, 53, 55				With [GK9], Center, Right
	68014317AA	1	2, 6	L	13, 15, 17, 53, 55				Center, Left
	68014320AA	1	2, 6	L	13, 15, 17, 53, 55				Right
5									INSULATION
	68014324AA	1	2, 6	L	13, 15, 17, 53, 55				With [CTA]
	68014325AA	1	2, 6	L	13, 15, 17, 53, 55				
6									INSULATION
	68014297AA	1	2, 6	L	13, 15, 17, 53, 55				Left

SPRINTER (VB)

SERIES	LINE	BODY	ENGINE	TRANSMISSION
L = LOWLINE	3 = HD DODGE 2WD 2 = Med. Duty DODGE 2WD	03 = CAB CHASSIS WHEEL BASE 3 05 = CAB CHASSIS WHEEL BASE 5 13 = 119 WB 53 = 119 WB 15 = VAN WHEEL BASE 5 55 = WAGON WHEEL BASE 5 17 = VAN WHEEL BASE 7	EG2 = 3.5L V6 Gas Engine EXM = 3.0L V6 Turbo Diesel Engine	DGZ = 5-Speed Auto W5A380 Transmission

Inner Paneling, Roof, High Roof
Figure IVB-245

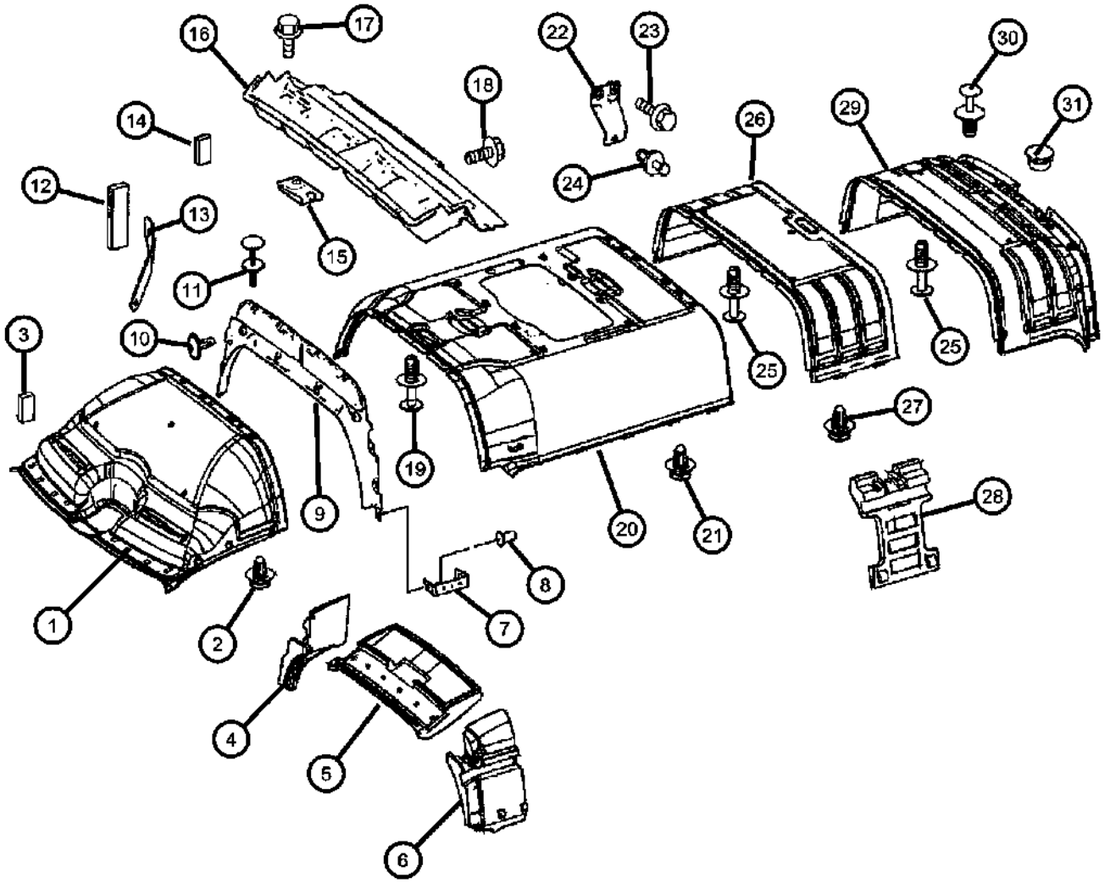

ITEM	PART NUMBER	QTY	LINE	SERIES	BODY	ENGINE	TRANS	TRIM	DESCRIPTION
	68014298AA	1	2, 6	L	13, 15, 17, 53, 55				Right
7	68014184AA	2	2, 3, 6, 7	L					BRACKET
8	05134061AA	8	2, 3, 6, 7	L	13, 15, 17, 53, 55				RIVET
9									PANEL
	1HC05XDVAA	1	2, 3, 6, 7	L	13, 15, 17, 53, 55			*A6	With [MX2] or [MX1] and [[GKA] [GKE]
		1	2, 3, 6, 7	L	13, 15, 17, 53, 55			*E7	With [MX2] or [MX1] and [[GKA] [GKE]
		1	2, 3, 6, 7	L	13, 15, 17, 53, 55			*F7	With [MX2] or [MX1] and [[GKA] [GKE]
	1HC06XDVAA	1	2, 3, 6, 7	L	13, 15, 17, 53, 55			*F7	With [MX2] or [MX1] and [[GKA]
	1HC07XDVAA	1	2, 3, 6, 7	L	13, 15, 17, 53, 55			*A6	With [MX2] or [MX1] and [[GKE]
		1	2, 3, 6, 7	L	13, 15, 17, 53, 55			*E7	With [MX2] or [MX1] and [[GKE]
		1	2, 3, 6, 7	L	13, 15, 17, 53, 55			*F7	With [MX2] or [MX1] and [[GKE]
	1HC08XDVAA	1	2, 3, 6, 7	L	13, 15, 17, 53, 55			*A6	With [MWJ] [GKA] or [GKE]
		1	2, 3, 6, 7	L	13, 15, 17, 53, 55			*A6	With [MX2] or [MX1] and [[GKA]
		1	2, 3, 6, 7	L	13, 15, 17, 53, 55			*E7	With [MX2] or [MX1] and [[GKA]
	1HC09XDVAA	1	2, 3, 6, 7	L	13, 15, 17, 53, 55			*A6	With [MWJ] [GKA]
		1	2, 3, 6, 7	L	13, 15, 17, 53, 55			*E7	With [MWJ] [GKA]
		1	2, 3, 6, 7	L	13, 15, 17, 53, 55			*F7	With [MWJ] [GKA]
	1HC10XDVAA	1	2, 3, 6, 7	L	13, 15, 17			*A6	With [MWJ] [GKE]
		1	2, 3, 6, 7	L	13, 15, 17, 53, 55			*E7	With [MWJ] [GKA] or [GKE]
		1	2, 3, 6, 7	L	13, 15, 17, 53, 55			*F7	With [MWJ] [GKA] or [GKE]
	1HC12XDVAA	1	2, 3, 6, 7	L	13, 15, 17			*E7	With [MWJ] [GK9]
		1	2, 3, 6, 7	L	13, 15, 17			*F7	With [MWJ] [GK9]
	1HC13XDVAA	1	2, 3, 6, 7	L	13, 15, 17			*A6	With [MX2] or [MX1] and [[GK9]
		1	2, 3, 6, 7	L	13, 15, 17			*E7	With [MWJ] [GKE]

SPRINTER (VB)

SERIES	LINE	BODY	ENGINE	TRANSMISSION
L = LOWLINE	3 = HD DODGE 2WD 2 = Med. Duty DODGE 2WD	03 = CAB CHASSIS WHEEL BASE 3 05 = CAB CHASSIS WHEEL BASE 5 13 = 119 WB 53 = 119 WB 15 = VAN WHEEL BASE 5 55 = WAGON WHEEL BASE 5 17 = VAN WHEEL BASE 7	EG2 = 3.5L V6 Gas Engine EXM = 3.0L V6 Turbo Diesel Engine	DGZ = 5-Speed Auto W5A380 Transmission

Inner Paneling, Roof, High Roof
Figure IVB-245

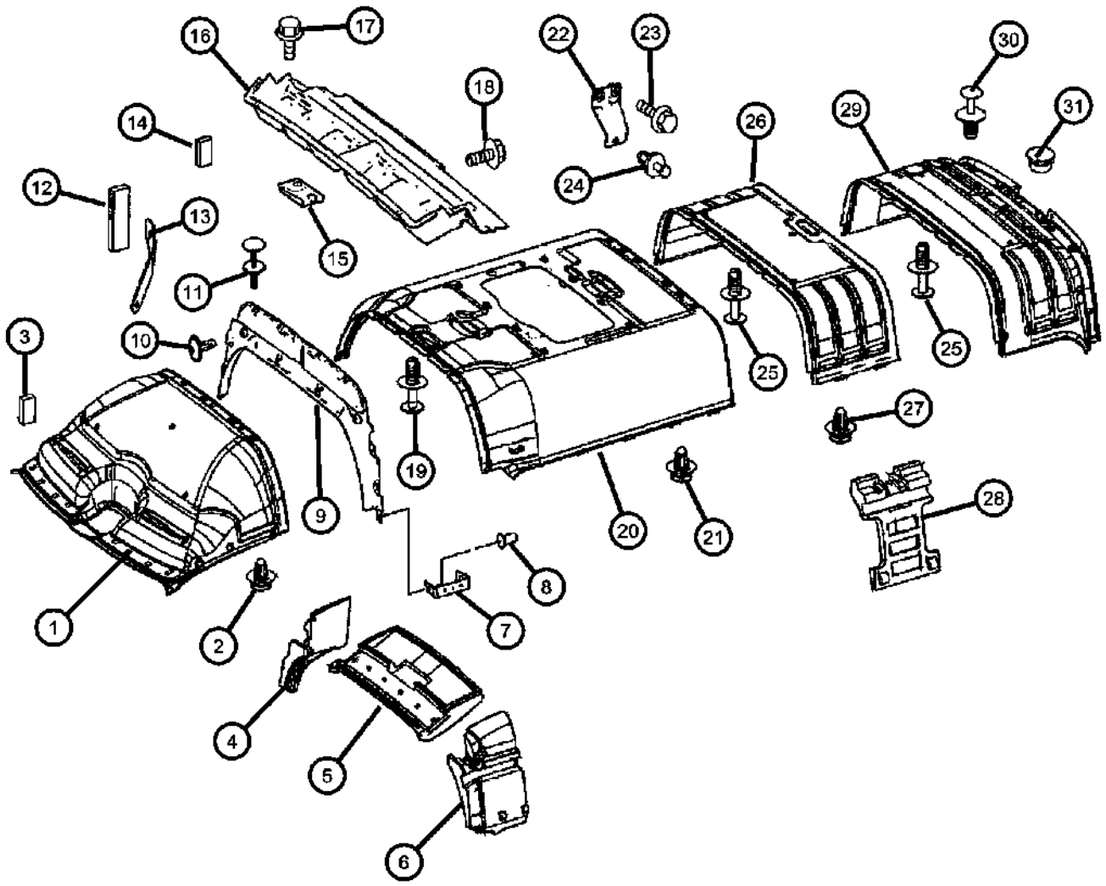

ITEM	PART NUMBER	QTY	LINE	SERIES	BODY	ENGINE	TRANS	TRIM	DESCRIPTION
		1	2, 3, 6, 7	L	13, 15, 17			*F7	With [MWJ] [GKE]
		1	2, 3, 6, 7	L	17, 13, 15			*A6	With [MWJ] [GK9]
		1	2, 3, 6, 7	L	13, 15, 17			*E7	With [MX2] or [MX1] and [[GK9]
		1	2, 3, 6, 7	L	13, 15, 17			*F7	With [MX2] or [MX1] and [[GK9]
10	68009926AA	5	2, 3, 6, 7	L	13, 15, 17				SCREW
11									RIVET
	1HC04NC-VAA	2	2, 3, 6, 7	L				*A6	
		2	2, 3, 6, 7	L				*E7	
		2	2, 3, 6, 7	L				*F7	
12	68014185AA	1	2, 3, 6, 7	L	13, 15, 17, 53, 55				SPACER
13	68014186AA	1	2, 3, 6, 7	L	13, 15, 17, 53, 55				BRACKET
14	68010773AA	1	2, 3, 6, 7	L	13, 15, 17, 53, 55				INSULATION
15	06104737AA	4	2, 3, 6, 7	L	55, 13, 15, 17, 53				CLIP, CLIP-SPRING
16									PANEL, Roof
	1HC43NC-VAA	1	2, 3, 6, 7	L	13, 15, 17, 53, 55			*AL	
		1	2, 3, 6, 7	L	13, 15, 17, 53, 55			*E7	
		1	2, 3, 6, 7	L	13, 15, 17, 53, 55			*F7	
17	68009926AA	10	2, 3, 6, 7	L	13, 15, 17, 53, 55				SCREW
18	06104505AA	2	2, 3, 6, 7	L	13, 15, 17, 53, 55				SCREW
19									RIVET, Plastic
	1AR96DX9AA	8	2, 3, 6, 7	L	13, 15, 17, 53, 55			*E7	
		8	2, 3, 6, 7	L	13, 15, 17, 53, 55			*F7	
		8	2, 3, 6, 7	L	13, 15, 17, 53, 55			*A6	
20		8							HEADLINER, Center, (NOT SERVICED)
21	05125569AA	4	2, 3, 6, 7	L	13, 15, 17, 53, 55				CLIP, Headlining

SPRINTER (VB)

SERIES	LINE	BODY	ENGINE	TRANSMISSION
L = LOWLINE	3 = HD DODGE 2WD 2 = Med. Duty DODGE 2WD	03 = CAB CHASSIS WHEEL BASE 3 05 = CAB CHASSIS WHEEL BASE 5 13 = 119 WB 53 = 119 WB 15 = VAN WHEEL BASE 5 55 = WAGON WHEEL BASE 5 17 = VAN WHEEL BASE 7	EG2 = 3.5L V6 Gas Engine EXM = 3.0L V6 Turbo Diesel Engine	DGZ = 5-Speed Auto W5A380 Transmission

Inner Paneling, Roof, High Roof
Figure IVB-245

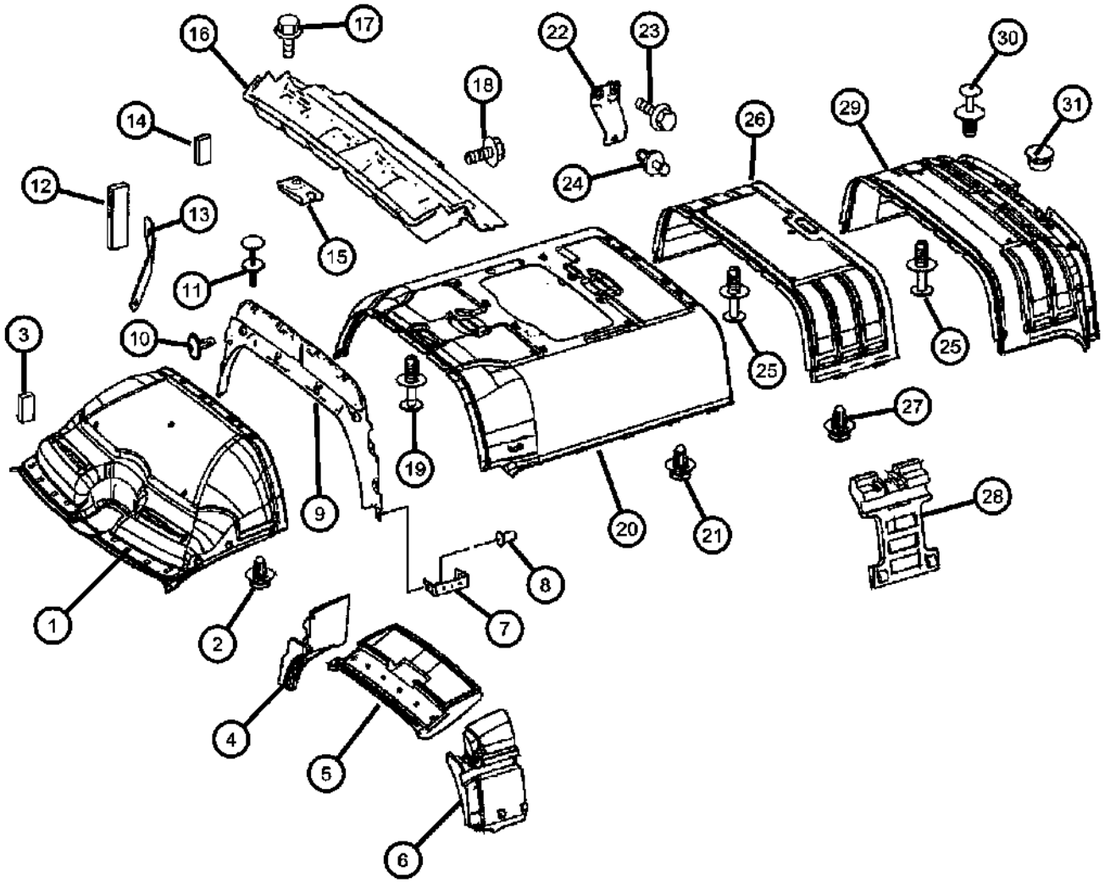

ITEM	PART NUMBER	QTY	LINE	SERIES	BODY	ENGINE	TRANS	TRIM	DESCRIPTION
22	68014234AA	2	2, 3, 6, 7	L	13, 15, 17, 53, 55				BRACKET
23	06104513AA	4	2, 3, 6, 7	L	13, 15, 17, 53, 55				SCREW
24									RIVET, RIVET
	1HC32NC-VAA	AR	2, 3, 6, 7	L	13, 15, 17, 53, 55			*AL	
		AR	2, 3, 6, 7	L	13, 15, 17, 53, 55			*E7	
		AR	2, 3, 6, 7	L	13, 15, 17, 53, 55			*F7	
25									RIVET, Plastic
	1AR96DX9AA	8	2, 3, 6, 7	L	13, 15, 17, 53, 55			*A6	
		8	2, 3, 6, 7	L	13, 15, 17, 53, 55			*E7	
		8	2, 3, 6, 7	L	13, 15, 17, 53, 55			*F7	
26									HEADLINER, Rear
	1HC34KDVAA	1	2, 3, 6, 7	L	15, 55			*E7	[DV]
		1	2, 3, 6, 7	L	15, 55			*F7	[DV]
		1	2, 3, 6, 7	L	15, 55			*A6	[DV]
	1HC34TDVAA	1	2, 3, 6, 7	L	15, 55			*F7	[A7]
		1	2, 3, 6, 7	L	15, 55			*A6	[A7]
		1	2, 3, 6, 7	L	15, 55			*E7	[A7]
	1HC35KDVAA	2	2, 3, 6, 7	L	13, 15, 17, 53, 55			*A6	[DV] , With Lamp
		2	2, 3, 6, 7	L	13, 15, 17, 53, 55			*E7	[DV] , With Lamp
		2	2, 3, 6, 7	L	13, 15, 17, 53, 55			*F7	[DV] , With Lamp
27	05125569AA	4	2, 3, 6, 7	L	13, 15, 17, 53, 55				CLIP, Headlining
28									INSULATION
	68014294AA	1	2, 6	L	53, 55				Left
	68014295AA	1	2, 6	L	53, 55				Right
29									HEADLINER, Rear
	1HC37KDVAA	1	2, 3, 6, 7	L	13, 53			*A6	

SPRINTER (VB)

SERIES	LINE	BODY	ENGINE	TRANSMISSION
L = LOWLINE	3 = HD DODGE 2WD 2 = Med. Duty DODGE 2WD	03 = CAB CHASSIS WHEEL BASE 3 05 = CAB CHASSIS WHEEL BASE 5 13 = 119 WB 53 = 119 WB 15 = VAN WHEEL BASE 5 55 = WAGON WHEEL BASE 5 17 = VAN WHEEL BASE 7	EG2 = 3.5L V6 Gas Engine EXM = 3.0L V6 Turbo Diesel Engine	DGZ = 5-Speed Auto W5A380 Transmission

Inner Paneling, Roof, High Roof
Figure IVB-245

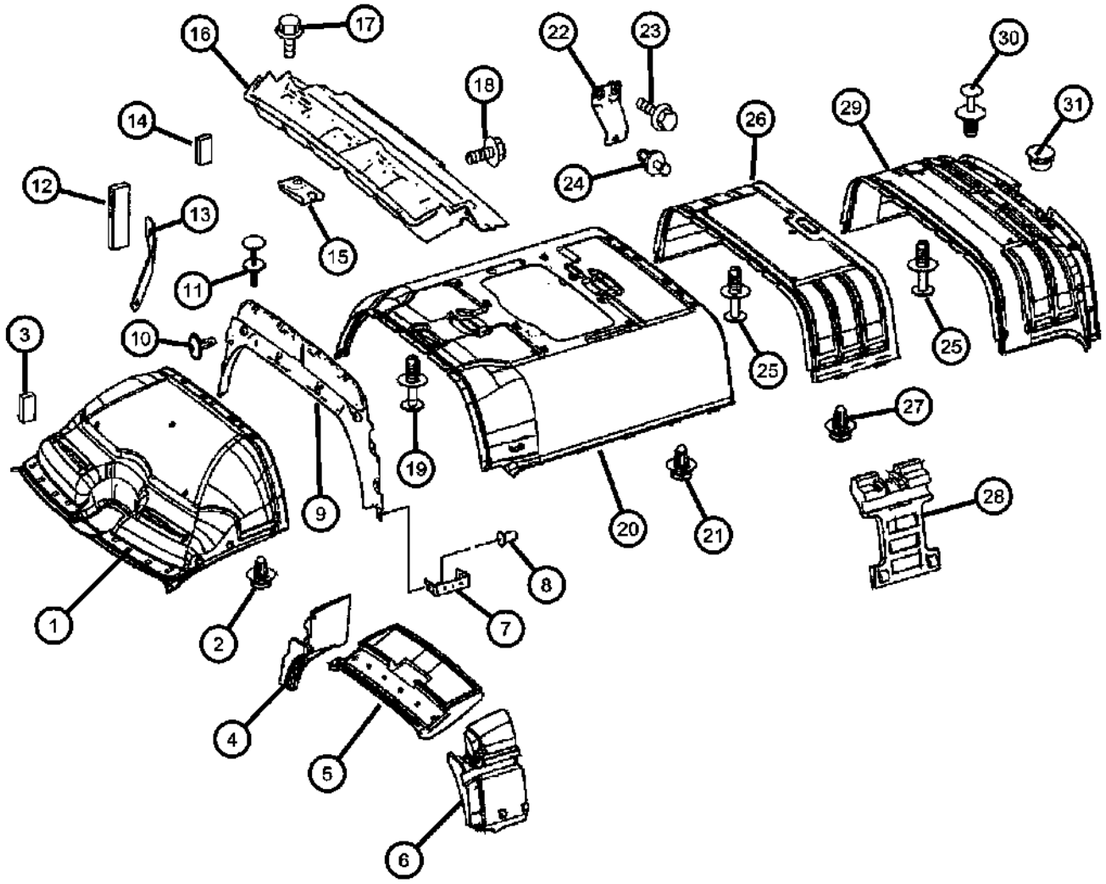

ITEM	PART NUMBER	QTY	LINE	SERIES	BODY	ENGINE	TRANS	TRIM	DESCRIPTION
		1	2, 3, 6, 7	L	13, 53			*E7	
		1	2, 3, 6, 7	L	13, 53			*F7	
30									RIVET, RIVET
	1HC32NC-VAA	AR	2, 3, 6, 7	L	13, 15, 17, 53, 55			*AL	
		AR	2, 3, 6, 7	L	13, 15, 17, 53, 55			*E7	
		AR	2, 3, 6, 7	L	13, 15, 17, 53, 55			*F7	
31									CAP
	1HC40NC-VAA	4	2, 3, 6, 7	L	13, 15, 17, 53, 55			*A6	
		4	2, 3, 6, 7	L	13, 15, 17, 53, 55			*E7	
		4	2, 3, 6, 7	L	13, 15, 17, 53, 55			*F7	

SPRINTER (VB)

SERIES	LINE	BODY	ENGINE	TRANSMISSION
L = LOWLINE	3 = HD DODGE 2WD 2 = Med. Duty DODGE 2WD	03 = CAB CHASSIS WHEEL BASE 3 05 = CAB CHASSIS WHEEL BASE 5 13 = 119 WB 53 = 119 WB 15 = VAN WHEEL BASE 5 55 = WAGON WHEEL BASE 5 17 = VAN WHEEL BASE 7	EG2 = 3.5L V6 Gas Engine EXM = 3.0L V6 Turbo Diesel Engine	DGZ = 5-Speed Auto W5A380 Transmission

Window Airbag/Head Side Airbag
Figure IVB-250

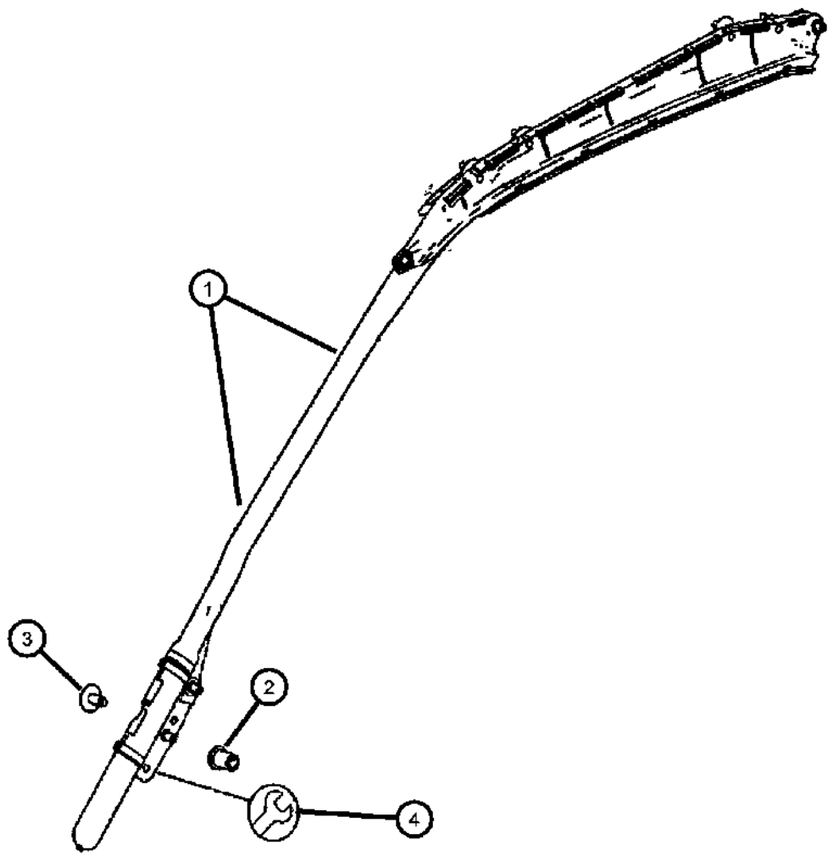

ITEM	PART NUMBER	QTY	LINE	SERIES	BODY	ENGINE	TRANS	TRIM	DESCRIPTION
1									AIR BAG, Side Curtain
	1HD69NC-VAA	1	2, 3, 6, 7	L				*E7	[E7], Left
		1	2, 3, 6, 7	L				*F7	[F7], Left
	1HD70NC-VAA	1	2, 3, 6, 7	L				*A6	[A6], Right
		1	2, 3, 6, 7	L				*E7	[E7], Right
		1	2, 3, 6, 7	L				*F7	[F7], Right
		1	2, 3, 6, 7	L				*A6	[A6], Left
2	05133486AA	4	2, 3, 6, 7	L					RIVET
3	68014337AA	8	2, 3, 6, 7	L					SCREW
4	68016751AA	2	2, 3, 6, 7	L					CONNECTORRight & Left

SPRINTER (VB)

SERIES	LINE	BODY	ENGINE	TRANSMISSION
L = LOWLINE	3 = HD DODGE 2WD 2 = Med. Duty DODGE 2WD	03 = CAB CHASSIS WHEEL BASE 3 05 = CAB CHASSIS WHEEL BASE 5 13 = 119 WB 53 = 119 WB 15 = VAN WHEEL BASE 5 55 = WAGON WHEEL BASE 5 17 = VAN WHEEL BASE 7	EG2 = 3.5L V6 Gas Engine EXM = 3.0L V6 Turbo Diesel Engine	DGZ = 5-Speed Auto W5A380 Transmission

Cargo Retainers
Figure IVB-255

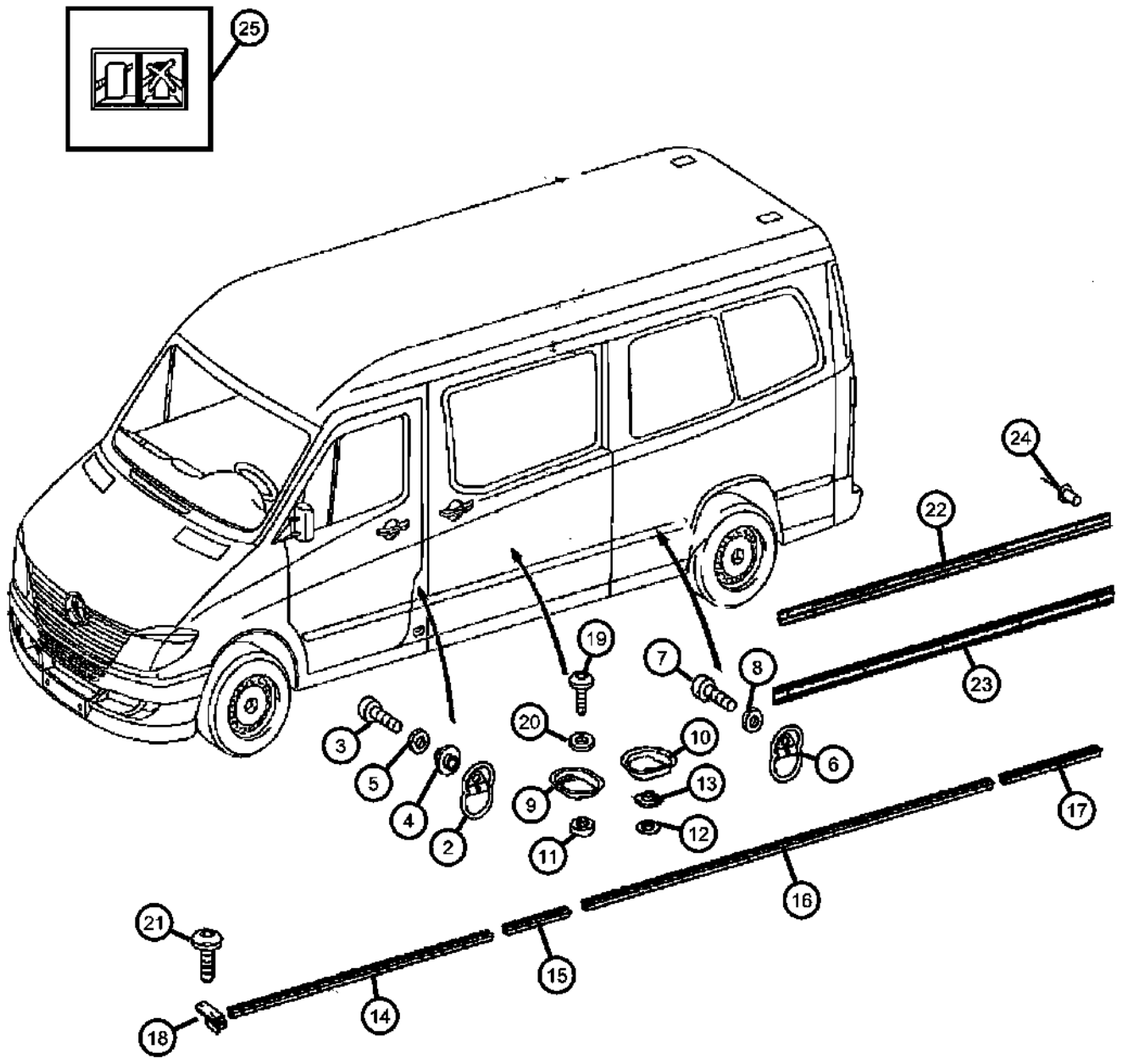

ITEM	PART NUMBER	QTY	LINE	SERIES	BODY	ENGINE	TRANS	TRIM	DESCRIPTION
-1	68038249AA	1	2, 3, 6, 7	L					STRAP, Cargo Tie Down
2	05170492AA	2	2, 3, 6, 7	L	13, 15, 17, 53, 55				RETAINER
3									BOLT, Hex Head
	05103816AA	2	2, 3, 6, 7	L	13, 15, 17, 53, 55				
		14	3, 7	L	17				
4	68015030AA	2	2, 3, 6, 7	L	13, 15, 17, 53, 55				SPACER
5	05103726AB	2	2, 3, 6, 7	L	13, 15, 17, 53, 55				WASHER
6	05170492AA	2	2, 3, 6, 7	L	13, 15, 17, 53, 55				RETAINER
7									BOLT, Hex Head
	05103816AA	2	2, 3, 6, 7	L	15, 17, 53, 55, 13				
		14	3, 7	L	17				
8									WASHER
	05142916AA	6	2, 3, 6, 7	L	13, 15, 17, 53, 55				
		14	3, 7	L	17				
9	05170494AA	99	2, 3, 6, 7	L	13, 15, 17, 53, 55				RETAINER
10	68015034AA	12	2, 3, 6, 7	L	13, 15, 17, 53, 55				RETAINER
11									SPACER
	68015032AA	2	2, 3, 6, 7	L	13, 15, 17, 53, 55				[11 MM]
	68015033AA	2	2, 3, 6, 7	L	13, 15, 17, 53, 55				[13 MM]
12	68015036AA	2	2, 3, 6, 7	L	13, 15, 17, 53, 55				BUSHING
13	68015035AA	8	2, 3, 6, 7	L	13, 15, 17, 53, 55				BUSHING
14									RAIL
	68015037AA	2	2, 6	L	13, 15, 17				
		2	3, 7	L	15, 17				
	68015039AA	2	3, 7	L	13				
15	68015040AA	2	3, 7	L	15, 17				RAIL
16									RAIL

SPRINTER (VB)

SERIES	LINE	BODY	ENGINE	TRANSMISSION
L = LOWLINE	3 = HD DODGE 2WD 2 = Med. Duty DODGE 2WD	03 = CAB CHASSIS WHEEL BASE 3 05 = CAB CHASSIS WHEEL BASE 5 13 = 119 WB 53 = 119 WB 15 = VAN WHEEL BASE 5 55 = WAGON WHEEL BASE 5 17 = VAN WHEEL BASE 7	EG2 = 3.5L V6 Gas Engine EXM = 3.0L V6 Turbo Diesel Engine	DGZ = 5-Speed Auto W5A380 Transmission

Cargo Retainers
Figure IVB-255

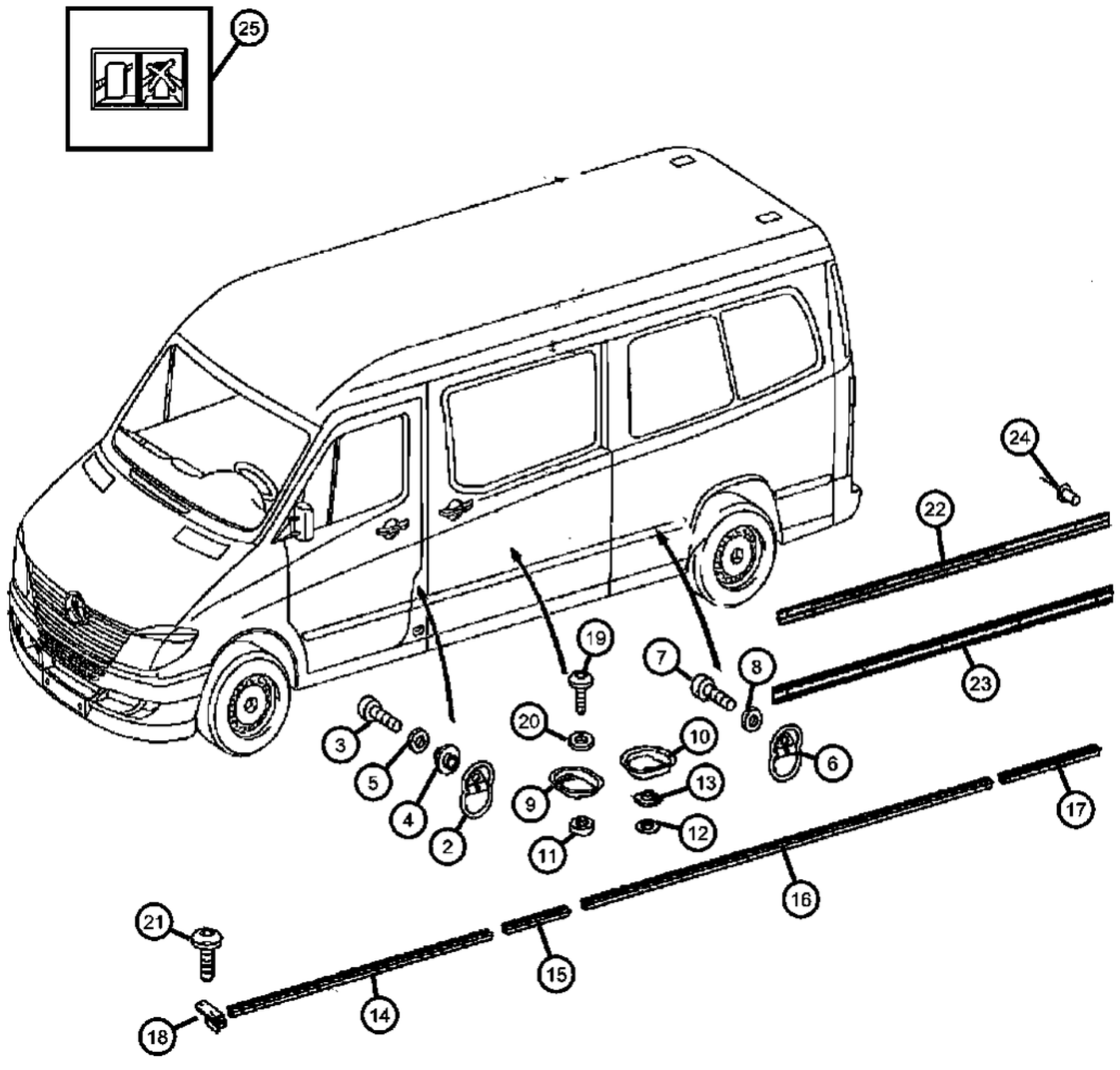

ITEM	PART NUMBER	QTY	LINE	SERIES	BODY	ENGINE	TRANS	TRIM	DESCRIPTION
	68015041AA	2	3, 7	L	15, 17				
	68015042AA	2	3, 7	L	13				
	68015043AA	2	2, 6	L	13				
	68015044AA	2	2, 6	L	15				
	68015045AA	2	2, 6	L	17				
17	68015046AA	2	3, 7	L	17				RAIL
18									CAP
	68015047AA	4	2, 6	L	13, 15, 17				
		8	3, 7	L	15				
		12	3, 7	L	17				
19									BOLT, Hex Head
	05103816AA	2	2, 3, 6, 7	L	13, 15, 17, 53, 55				
		14	3, 7	L	17				
20									WASHER
	05142916AA	6	2, 3, 6, 7	L	13, 15, 17, 53, 55				
		14	3, 7	L	17				
		12	2, 6	L	17				
21									SCREW
	06104496AA	2	3, 7	L	03, 05				
		2	2, 3, 6, 7	L	13, 15, 17, 53, 55				
22									RAIL
	68008778AA	1	2, 3, 6, 7	L	13, 15, 17, 53, 55				Rear Top, Right & Left
	68008780AA	1	2, 3, 6, 7	L	15, 17, 55				Central Top, Right & Left
23									RAIL
	68008784AA	1	2, 3, 6, 7	L	13, 15, 17, 53, 55				Rear Bottom, Right & Left
	68008786AA	1	2, 3, 6, 7	L	15, 17, 55				Central Bottom, Right & Left
24									RIVET
	05125821AA	4	2, 3, 6, 7	L	13, 15, 17, 53, 55				

SPRINTER (VB)

SERIES	LINE	BODY	ENGINE	TRANSMISSION
L = LOWLINE	3 = HD DODGE 2WD 2 = Med. Duty DODGE 2WD	03 = CAB CHASSIS WHEEL BASE 3 05 = CAB CHASSIS WHEEL BASE 5 13 = 119 WB 53 = 119 WB 15 = VAN WHEEL BASE 5 55 = WAGON WHEEL BASE 5 17 = VAN WHEEL BASE 7	EG2 = 3.5L V6 Gas Engine EXM = 3.0L V6 Turbo Diesel Engine	DGZ = 5-Speed Auto W5A380 Transmission

AR = use ase required - = Non illustrrated part

<< RETURN TO GROUP INDEX

Cargo Retainers
Figure IVB-255

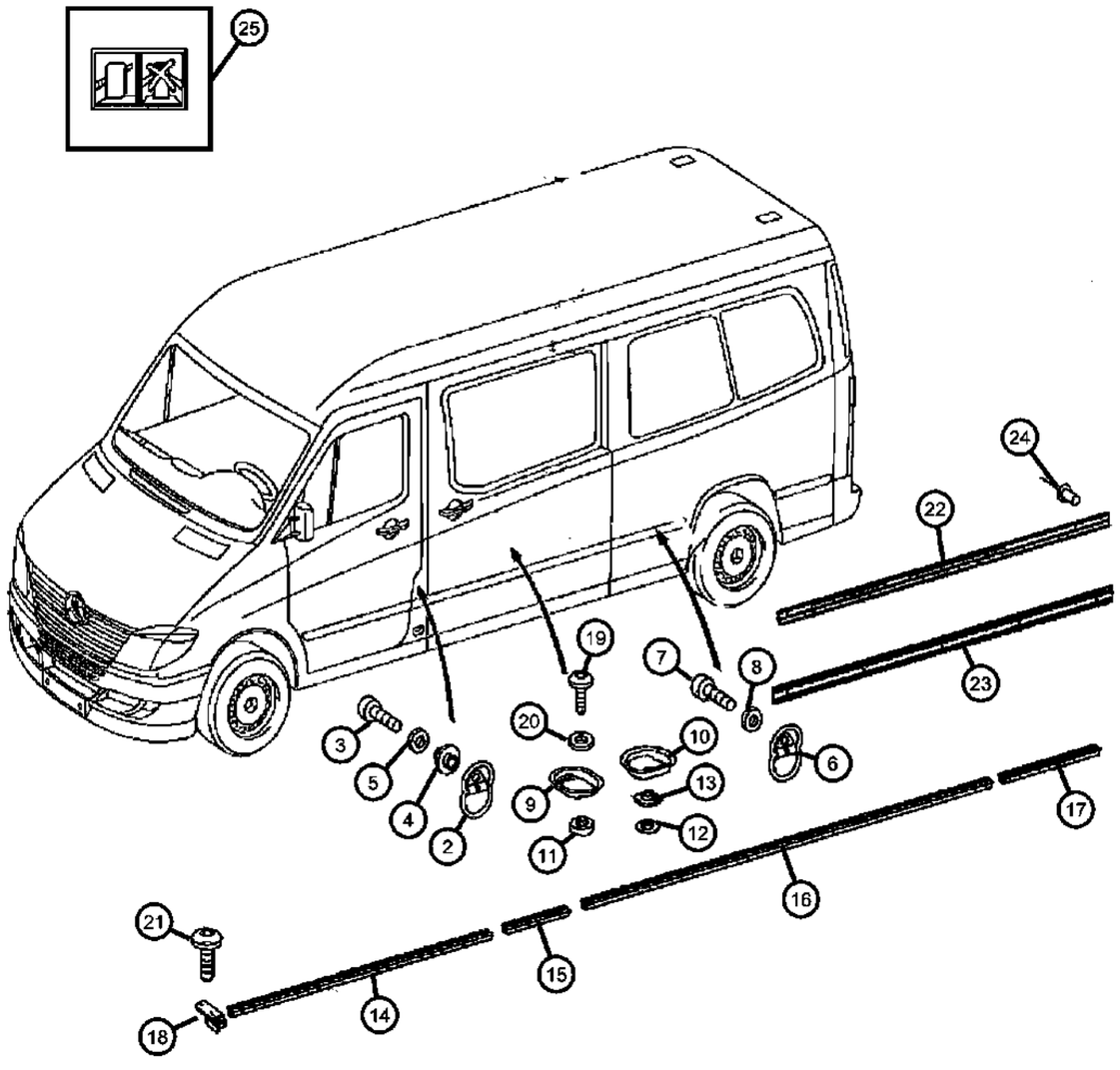

ITEM	PART NUMBER	QTY	LINE	SERIES	BODY	ENGINE	TRANS	TRIM	DESCRIPTION
		9	2, 3, 6, 7	L	17				
25	05124356AA	1	2, 3, 6, 7	L	13, 15, 17, 53, 55				LABEL

SPRINTER (VB)

SERIES	LINE	BODY	ENGINE	TRANSMISSION
L = LOWLINE	3 = HD DODGE 2WD 2 = Med. Duty DODGE 2WD	03 = CAB CHASSIS WHEEL BASE 3 05 = CAB CHASSIS WHEEL BASE 5 13 = 119 WB 53 = 119 WB 15 = VAN WHEEL BASE 5 55 = WAGON WHEEL BASE 5 17 = VAN WHEEL BASE 7	EG2 = 3.5L V6 Gas Engine EXM = 3.0L V6 Turbo Diesel Engine	DGZ = 5-Speed Auto W5A380 Transmission

Partition Wall / Load Protection Grill
Figure IVB-260

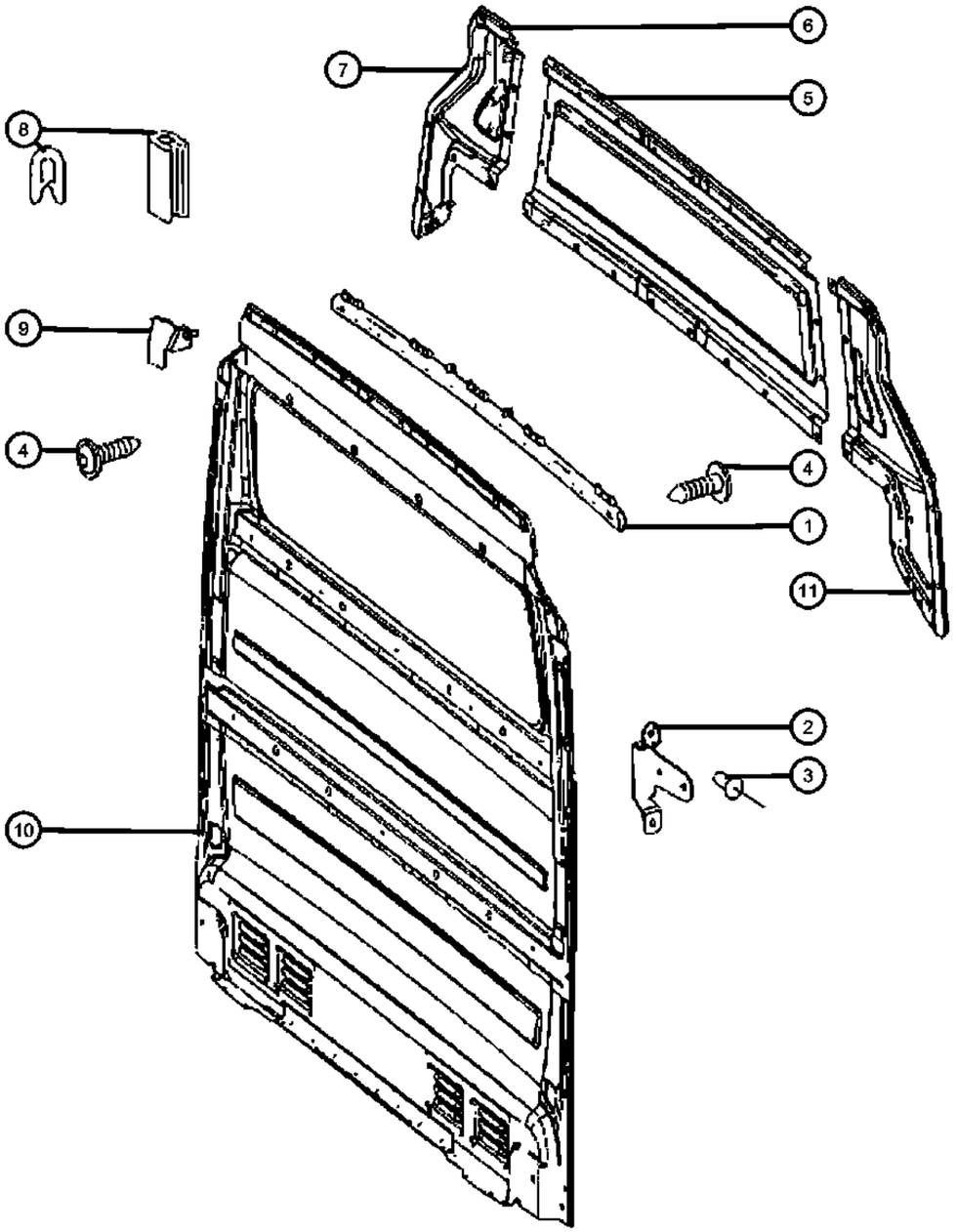

ITEM	PART NUMBER	QTY	LINE	SERIES	BODY	ENGINE	TRANS	TRIM	DESCRIPTION
1									REINFORCEMENT
	68009928AA	1	2, 3, 6, 7	L	13, 15, 17				
	68009929AA	1	3, 7	L	13, 15, 17				
2									BRACKET
	68009897AA	1	2, 3, 6, 7	L	13, 15, 17, 53, 55				Left
	68009898AA	1	2, 3, 6, 7	L	13, 15, 17, 53, 55				Right
3	05133554AA	16	2, 3, 6, 7	L	13, 15, 17, 53, 55				RIVET
4									SCREW
	68009926AA	5	2, 3, 6, 7	L	13, 15, 17				
		10	2, 3, 6, 7	L	13, 15, 17, 53, 55				
5									PARTITION, Cargo
	68009899AA	1	2, 6	L	13, 15, 17, 53, 55				
		1	3, 7	L	55, 13, 15, 17, 53				
6									COVER, Cargo Compartment
	68009920AA	1	2, 6	L	13, 15, 17				Contains Inner 68009922aa
		1	3, 7	L	13, 15, 17, 53, 55				Contains Inner 68009922aa
	68009921AA	1	2, 6	L	13, 15, 17				Contains Inner 68009925aa
7									COVER, Cargo Compartment
	68009922AA	1	2, 3, 6, 7	L	53, 55, 57				
	68009925AA	1	3, 7	L	13, 15, 17				
8	05134108AA	2	2, 3, 6, 7	L	13, 15, 17, 53, 55				WEATHERSTRIP, Glass
9									BRACKET
	68009936AA	1	3, 7	L	13, 15, 17				Right
	68009937AA	1	3, 7	L	13, 15, 17				Left
10									PARTITION, Cargo
	68009882AA	1	2, 6	L	13, 15, 17				With [XJW Or XJ1]
	68009883AA	1	2, 6	L	13, 15, 17				With [CWC]
	68009891AA	1	3, 7	L	13, 15, 17				[MWJ+XJW Or XJ1]
	68009893AA	1	3, 7	L	13, 15, 17				With [CWC]

SPRINTER (VB)

SERIES	LINE	BODY	ENGINE	TRANSMISSION
L = LOWLINE	3 = HD DODGE 2WD 2 = Med. Duty DODGE 2WD	03 = CAB CHASSIS WHEEL BASE 3 05 = CAB CHASSIS WHEEL BASE 5 13 = 119 WB 53 = 119 WB 15 = VAN WHEEL BASE 5 55 = WAGON WHEEL BASE 5 17 = VAN WHEEL BASE 7	EG2 = 3.5L V6 Gas Engine EXM = 3.0L V6 Turbo Diesel Engine	DGZ = 5-Speed Auto W5A380 Transmission

Partition Wall / Load Protection Grill
Figure IVB-260

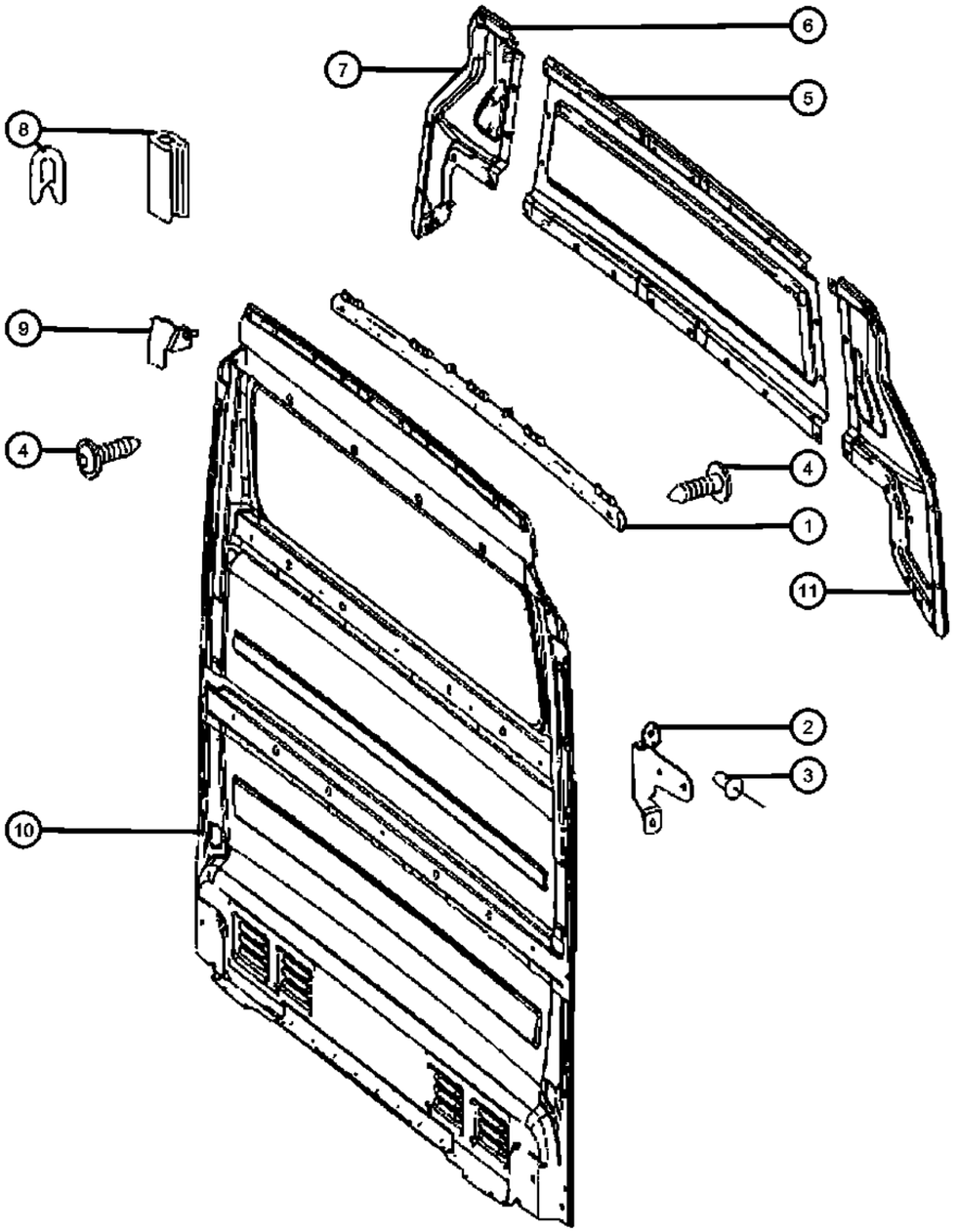

ITEM	PART NUMBER	QTY	LINE	SERIES	BODY	ENGINE	TRANS	TRIM	DESCRIPTION
11									COVER, Cargo Compartment
	68009903AA	1	2, 3, 6, 7	L	13, 15, 17				
	68009911AA	1	3, 6, 7, 2	L	53, 55, 57				
	68009912AA	1	2, 6	L	13, 15, 17, 53, 55				
	68009915AA	1	3, 7	L	13, 15, 17				

SPRINTER (VB)

SERIES	LINE	BODY	ENGINE	TRANSMISSION
L = LOWLINE	3 = HD DODGE 2WD 2 = Med. Duty DODGE 2WD	03 = CAB CHASSIS WHEEL BASE 3 05 = CAB CHASSIS WHEEL BASE 5 13 = 119 WB 53 = 119 WB 15 = VAN WHEEL BASE 5 55 = WAGON WHEEL BASE 5 17 = VAN WHEEL BASE 7	EG2 = 3.5L V6 Gas Engine EXM = 3.0L V6 Turbo Diesel Engine	DGZ = 5-Speed Auto W5A380 Transmission

Partition Wall with Slidding Door
Figure IVB-265

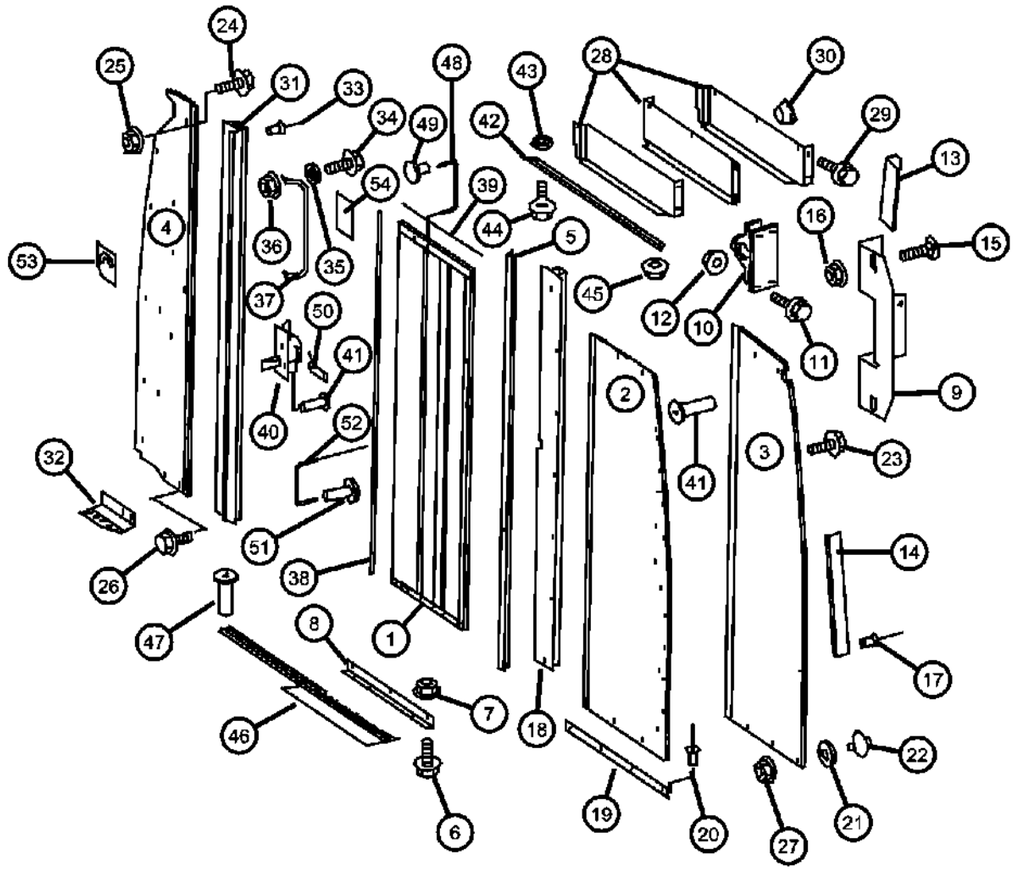

ITEM	PART NUMBER	QTY	LINE	SERIES	BODY	ENGINE	TRANS	TRIM	DESCRIPTION
1	68015179AA	1	2, 3, 6, 7	L	13, 15, 17				DOOR
2	68015164AA	1	2, 3, 6, 7	L	13, 15, 17				PANEL, Cargo compartment
3	68015173AA	1	2, 3, 6, 7	L	13, 15, 17				PARTITION, Cargo
4	68015156AA	1	2, 3, 6, 7	L	13, 15, 17				PARTITION, Cargo
5	68015165AA	1	2, 3, 6, 7	L	13, 15, 17				RAIL
6	05137660AA	4	2, 3, 6, 7	L	13, 15, 17, 53, 55				SCREW
7	06104707AA	3	2, 3, 6, 7	L	13, 15, 17, 53, 55				NUT, M5
8	68015167AA	1	2, 3, 6, 7	L	13, 15, 17				BRACKET
9	05104305AA	1	2, 3, 6, 7	L	13, 15, 17, 53, 55				STOP
10	05104419AA	1	2, 3, 6, 7	L	13, 15, 17, 53, 55				ADJUSTER, Cargo Door
11	05104652AA	4	2, 3, 6, 7	L	13, 15, 17, 53, 55				SCREW
12	05104660AA	4	2, 3, 6, 7	L	13, 15, 17, 53, 55				NUT
13	05104427AA	2	2, 3, 6, 7	L	13, 15, 17, 53, 55				BUMPER, Rubber
14									RAIL
	68015168AA	1	2, 3, 6, 7	L	13, 15, 17				
	68015171AA	1	2, 3, 6, 7	L	13, 15, 17				Without [MWJ] or [MX2] or [MX1]
15	05126132AA	2	2, 3, 6, 7	L	13, 15, 17, 53, 55				BOLT, Hex Head
16	06105169AA	4	2, 3, 6, 7	L					NUT
17	68015172AA	10	2, 3, 6, 7	L	13, 15, 17				RIVET
18									RAIL, Cargo Compartment
	68015175AA	1	2, 3, 6, 7	L	13, 15, 17				With [MWJ] or [MX2] or [MX1]
	68015176AA	1	2, 3, 6, 7	L	13, 15, 17				
19	68015177AA	1	2, 3, 6, 7	L	13, 15, 17				BRACKET
20	05125812AA	8	2, 3, 6, 7	L	13, 15, 17, 53, 55				RIVET
21	68013678AA	2	2, 3, 6, 7	L					WASHER
22	68015161AA	2	2, 3, 6, 7	L	13, 15, 17				SCREW
23	68015161AA	3	2, 3, 6, 7	L	13, 15, 17				SCREW
24	05137660AA	4	2, 3, 6, 7	L	13, 15, 17, 53, 55				SCREW

SPRINTER (VB)

SERIES	LINE	BODY	ENGINE	TRANSMISSION
L = LOWLINE	3 = HD DODGE 2WD 2 = Med. Duty DODGE 2WD	03 = CAB CHASSIS WHEEL BASE 3 05 = CAB CHASSIS WHEEL BASE 5 13 = 119 WB 53 = 119 WB 15 = VAN WHEEL BASE 5 55 = WAGON WHEEL BASE 5 17 = VAN WHEEL BASE 7	EG2 = 3.5L V6 Gas Engine EXM = 3.0L V6 Turbo Diesel Engine	DGZ = 5-Speed Auto W5A380 Transmission

Partition Wall with Slidding Door
Figure IVB-265

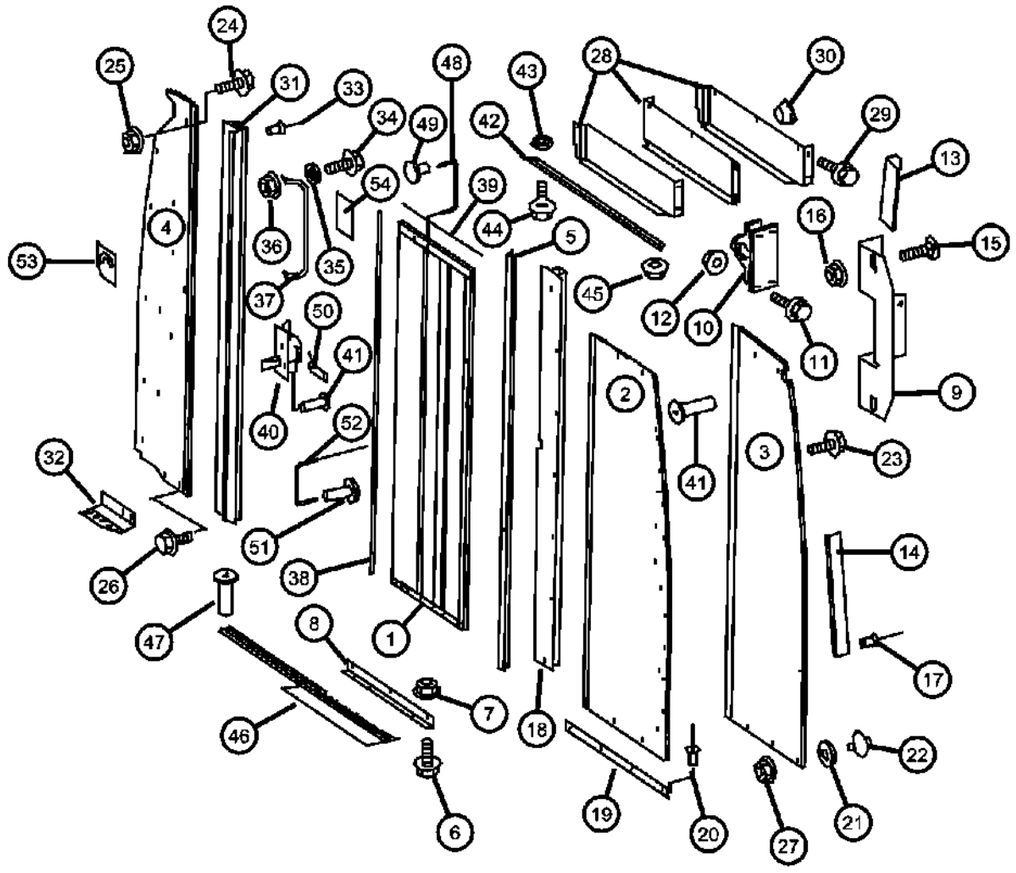

ITEM	PART NUMBER	QTY	LINE	SERIES	BODY	ENGINE	TRANS	TRIM	DESCRIPTION
25	06104709AA	2	2, 3, 6, 7	L	13, 15, 17, 53, 55				NUT
26	68015178AA	5	2, 3, 6, 7	L	13, 15, 17				SCREW
27	06104707AA	1	2, 3, 6, 7	L	13, 15, 17, 53, 55				NUT, M5
28	68015208AA	1	2, 3, 6, 7	L	13, 15, 17				PANEL
29	05125748AA	3	2, 3, 6, 7	L	13, 15, 17, 53, 55				SCREW, Exhaust Bracket Mounting
30	05096373AB	3	2, 3, 6, 7	L	13, 15, 17, 53, 55				PLUG
31									RAIL, Cargo Compartment
	68015157AA	1	2, 3, 6, 7	L	13, 15, 17				With [MWJ] or [MX2] or [MX1]
	68015158AA	1	2, 3, 6, 7	L	13, 15, 17				
32	68015159AA	1	2, 3, 6, 7	L	13, 15, 17				BRACKET
33	05125812AA	5	2, 3, 6, 7	L	13, 15, 17, 53, 55				RIVET
34	05096986AA	4	2, 3, 6, 7	L					BOLT
35	05142916AA	6	2, 3, 6, 7	L	13, 15, 17, 53, 55				WASHER
36	06104709AA	2	2, 3, 6, 7	L	13, 15, 17, 53, 55				NUT
37	05132107AA	2	2, 3, 6, 7	L					HANDLE, Door Pull
38	68015160AA	1	2, 3, 6, 7	L	13, 15, 17				SEAL
39	68030733AA	1	2, 3, 6, 7	L	13, 15, 17				EDGE GUARD SECTION, NONE, SPRINTER
40	68015162AA	1	2, 3, 6, 7	L	13, 15, 17				LOCK, Door
41	05104623AA	8	2, 3, 6, 7	L	13, 15, 17, 53, 55				RIVET
42	68015181AA	1	2, 3, 6, 7	L	13, 15, 17				RAIL
43	05126208AA	4	2, 3, 6, 7	L	13, 15, 17, 53, 55				NUT, Hex
44	05125721AA	2	2, 3, 6, 7	L	13, 15, 17, 53, 55				BOLT
45	06104707AA	1	2, 3, 6, 7	L	13, 15, 17, 53, 55				NUT, M5
46	68015183AA	1	2, 3, 6, 7	L	13, 15, 17				PLATE, Scuff
47	05104623AA	4	2, 3, 6, 7	L	13, 15, 17, 53, 55				RIVET
48	68015185AA	1	2, 3, 6, 7	L	13, 15, 17				HANDLE, Cargo Door Interior

SPRINTER (VB)

SERIES	LINE	BODY	ENGINE	TRANSMISSION
L = LOWLINE	3 = HD DODGE 2WD 2 = Med. Duty DODGE 2WD	03 = CAB CHASSIS WHEEL BASE 3 05 = CAB CHASSIS WHEEL BASE 5 13 = 119 WB 53 = 119 WB 15 = VAN WHEEL BASE 5 55 = WAGON WHEEL BASE 5 17 = VAN WHEEL BASE 7	EG2 = 3.5L V6 Gas Engine EXM = 3.0L V6 Turbo Diesel Engine	DGZ = 5-Speed Auto W5A380 Transmission

Partition Wall with Slidding Door
Figure IVB-265

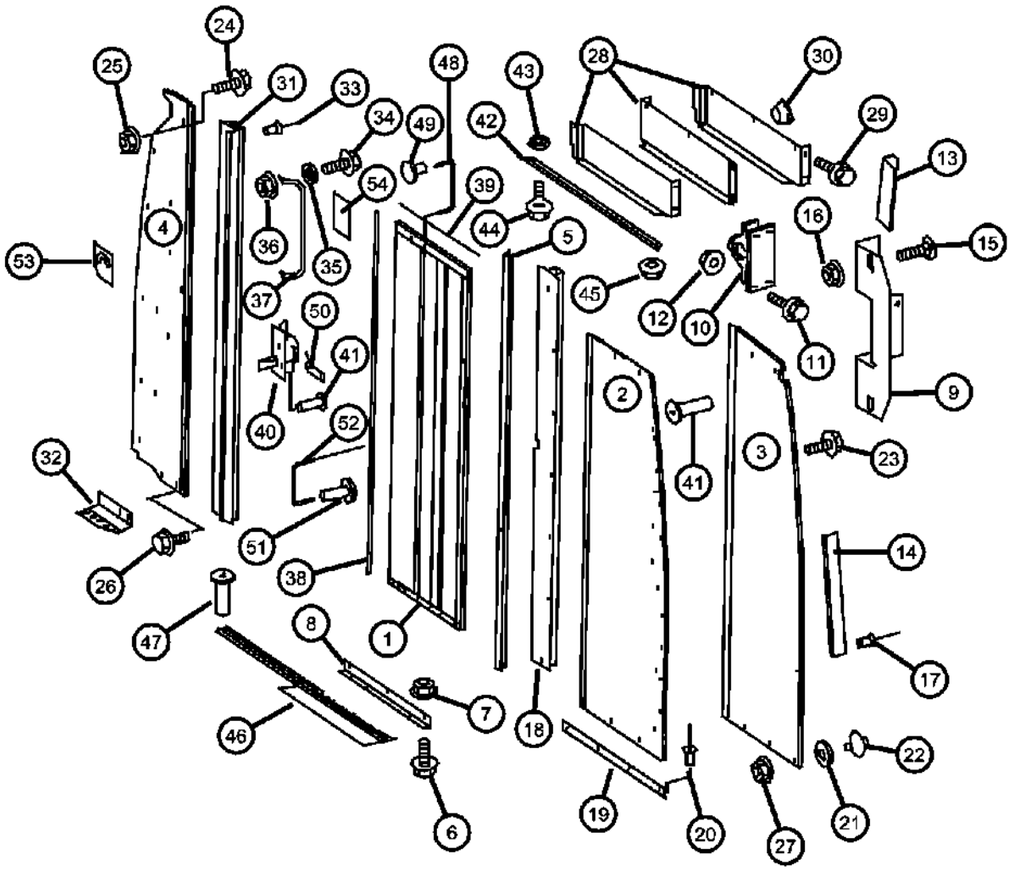

ITEM	PART NUMBER	QTY	LINE	SERIES	BODY	ENGINE	TRANS	TRIM	DESCRIPTION
49	06104119AA	4	2, 3, 6, 7	L	13, 15, 17				SCREW
50	68015184AA	1	2, 3, 6, 7	L	13, 15, 17				LATCH
51	06104121AA	4	2, 3, 6, 7	L	13, 15, 17, 53, 55				SCREW, Hex Flange Head
52	05123663AA	1	2, 3, 6, 7	L	13, 15, 17				HANDLE, Cargo Door Interior
53	05121146AA	1	2, 3, 6, 7	L	13, 15, 17, 53, 55				LABEL
54	05121162AA	1	2, 3, 6, 7	L	13, 15, 17, 53, 55				LABEL, Warning

SPRINTER (VB)

SERIES	LINE	BODY	ENGINE	TRANSMISSION
L = LOWLINE	3 = HD DODGE 2WD 2 = Med. Duty DODGE 2WD	03 = CAB CHASSIS WHEEL BASE 3 05 = CAB CHASSIS WHEEL BASE 5 13 = 119 WB 53 = 119 WB 15 = VAN WHEEL BASE 5 55 = WAGON WHEEL BASE 5 17 = VAN WHEEL BASE 7	EG2 = 3.5L V6 Gas Engine EXM = 3.0L V6 Turbo Diesel Engine	DGZ = 5-Speed Auto W5A380 Transmission

Floor Lining, Entry Paneling & Footrest in Cab
Figure IVB-310

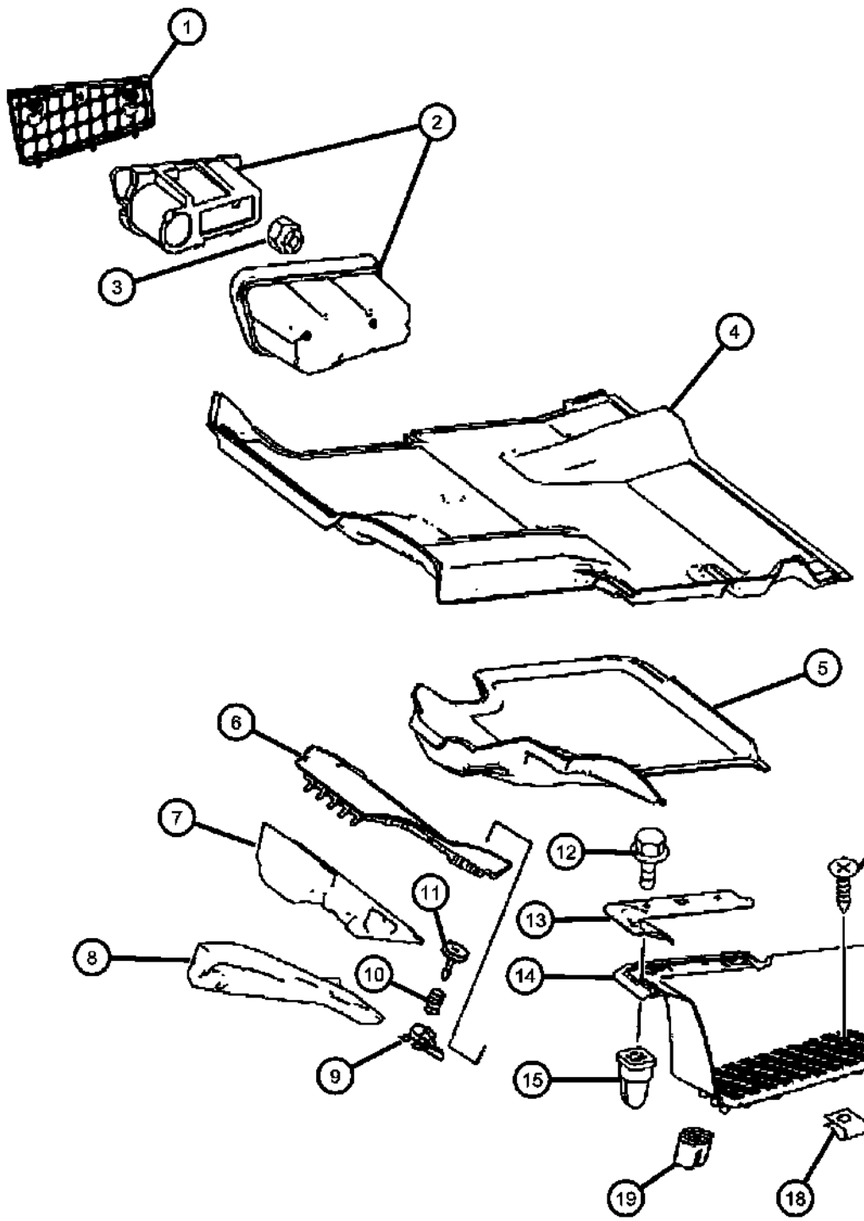

ITEM	PART NUMBER	QTY	LINE	SERIES	BODY	ENGINE	TRANS	TRIM	DESCRIPTION
1									COVER
	1HB30XDVAA	1	2, 3, 6, 7	L				*A6	
		1	2, 3, 6, 7	L				*E7	
		1	2, 3, 6, 7	L				*F7	
2									BIN, Storage
	1HB32XDVAA	1	2, 3, 6, 7	L				*A6	
		1	2, 3, 6, 7	L				*E7	
		1	2, 3, 6, 7	L				*F7	
3	05096978AA	6	2, 3, 6, 7	L	13, 15, 17, 53, 55				NUT, Hex, M6
4									COVER, Floor Pan
	1HB14BDVAA	1	2, 3, 6, 7	L	13, 15, 17, 53, 55			*E7	With [XGR] [CW9] [CWC] or [XJW] or [XJ1] , without [CD2] or [CK8]
		1	2, 3, 6, 7	L	13, 15, 17, 53, 55			*F7	With [XGR] [CW9] [CWC] or [XJW] or [XJ1] , without [CD2] or [CK8]
		1	2, 3, 6, 7	L	13, 15, 17, 53, 55			*AL	With [XGR] [CW9] [CWC] or [XJW] or [XJ1] , without [CD2] or [CK8]
	1HB15BDVAA	1	2, 3, 6, 7	L	03, 05, 53, 55			*E7	With [CWC] or [XJW] or [XJ1] , without [CD2] or [CW9] or [XGR]
		1	2, 3, 6, 7	L	13, 15, 17			*E7	With [CWC] or [XJW] or [XJ1] , without [CD2] or [CW9] or [XGR]
		1	2, 3, 6, 7	L	03, 05, 53, 55			*AL	With [CWC] or [XJW] or [XJ1] , without [CD2] or [CW9] or [XGR]
		1	2, 3, 6, 7	L	13, 15, 17			*AL	With [CWC] or [XJW] or [XJ1] , without [CD2] or [CW9] or [XGR]
		1	2, 3, 6, 7	L	03, 05, 53, 55			*F7	With [CWC] or [XJW] or [XJ1] , without [CD2] or [CW9] or [XGR]
		1	2, 3, 6, 7	L	13, 15, 17			*F7	With [CWC] or [XJW] or [XJ1] , without [CD2] or [CW9] or [XGR]
	1HB16BDVAA	1	2, 3, 6, 7	L	03, 05, 53, 55			*AL	With [CW9] and [CWC] or [XJW] or [XJ1] , without [XGR]
		1	2, 3, 6, 7	L	13, 15, 17			*AL	With [CW9] and [CWC] or [XJW] or [XJ1] , without [XGR]
		1	2, 3, 6, 7	L	03, 05, 53, 55			*F7	With [CW9] and [CWC] or [XJW] or [XJ1] , without [XGR]
		1	3, 6, 7, 2	L	13, 15, 17			*F7	With [CW9] and [CWC] or [XJW] or [XJ1] , without [XGR]
	1HB17BDVAA	1	2, 3, 6, 7	L	13, 15, 17, 53, 55			*AL	With [XGR] , without [CW9] or [CD2] or [CK8]

SPRINTER (VB)

SERIES	LINE	BODY	ENGINE	TRANSMISSION
L = LOWLINE	3 = HD DODGE 2WD 2 = Med. Duty DODGE 2WD	03 = CAB CHASSIS WHEEL BASE 3 05 = CAB CHASSIS WHEEL BASE 5 13 = 119 WB 53 = 119 WB 15 = VAN WHEEL BASE 5 55 = WAGON WHEEL BASE 5 17 = VAN WHEEL BASE 7	EG2 = 3.5L V6 Gas Engine EXM = 3.0L V6 Turbo Diesel Engine	DGZ = 5-Speed Auto W5A380 Transmission

Floor Lining, Entry Paneling & Footrest in Cab
Figure IVB-310

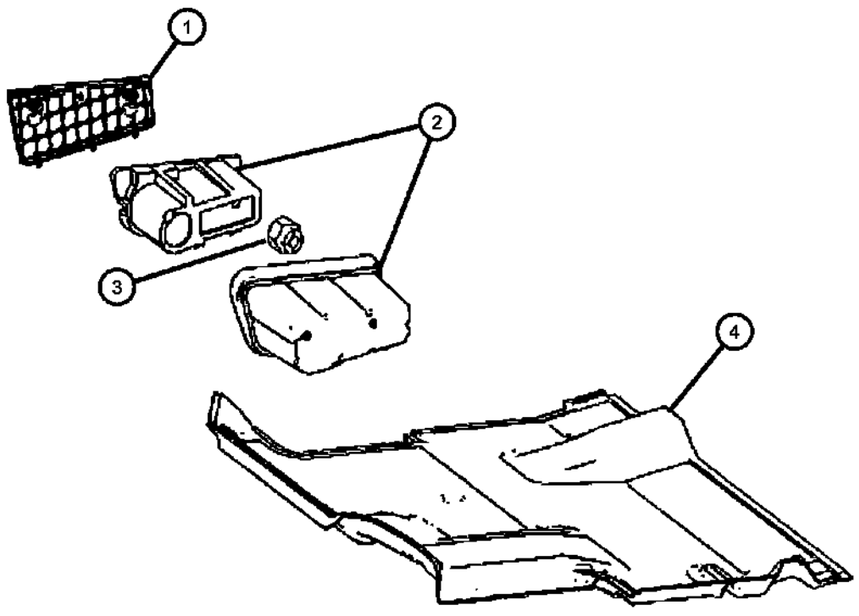

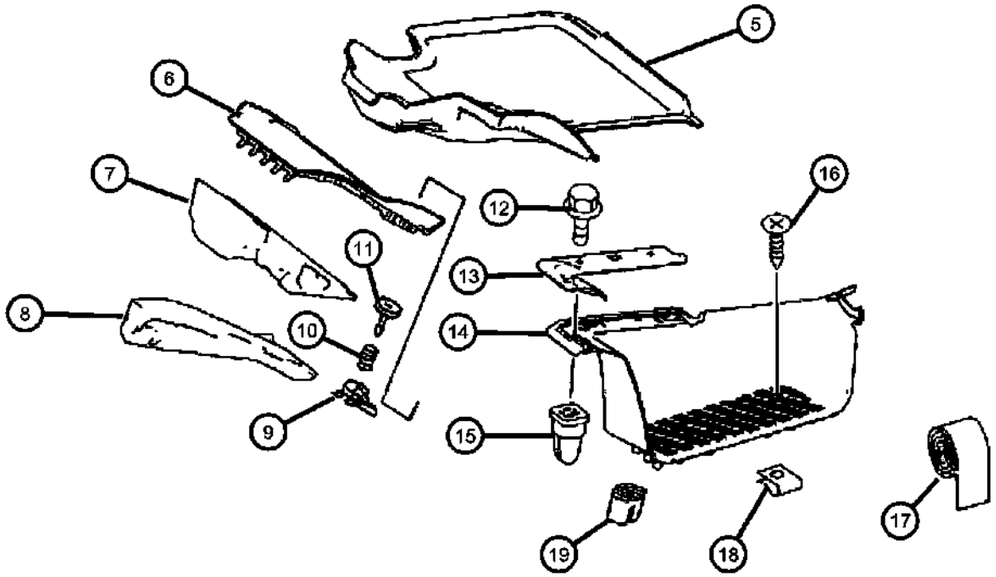

ITEM	PART NUMBER	QTY	LINE	SERIES	BODY	ENGINE	TRANS	TRIM	DESCRIPTION
		1	2, 3, 6, 7	L	13, 15, 17, 53, 55			*E7	With [XGR] , without [CW9] or [CD2] or [CK8]
		1	2, 3, 6, 7	L	03, 05, 53, 55			*E7	With [CW9] and [CWC] or [XJW] or [XJ1] , without [XGR]
		1	2, 3, 6, 7	L	13, 15, 17			*E7	With [CW9] and [CWC] or [XJW] or [XJ1] , without [XGR]
	1HB18BDVAA	1	2, 3, 6, 7	L	03, 05, 53, 55			*E7	Without [CD2] or [CW9] or [XGR]
		1	2, 3, 6, 7	L	13, 15, 17			*E7	Without [CD2] or [CW9] or [XGR]
		1	2, 3, 6, 7	L	03, 05, 53, 55			*F7	Without [CD2] or [CW9] or [XGR]
		1	2, 3, 6, 7	L	13, 15, 17, 53, 55			*F7	With [XGR] , without [CW9] or [CD2] or [CK8]
		1	2, 3, 6, 7	L	03, 05, 53, 55			*AL	Without [CD2] or [CW9] or [XGR]
		1	2, 3, 6, 7	L	13, 15, 17			*AL	Without [CD2] or [CW9] or [XGR]
	1HB22BDVAA	1	3, 6, 7, 2	L	13, 15, 17, 53, 55			*AL	With [CW9] , without [CK8] or [CWC] or [XJW] or [XJ1]
		1	2, 3, 6, 7	L	13, 15, 17, 53, 55			*E7	With [CW9] , without [CK8] or [CWC] or [XJW] or [XJ1]
		1	2, 3, 6, 7	L	15, 17, 13			*F7	Without [CD2] or [CW9] or [XGR]
		1	2, 3, 6, 7	L	13, 15, 17, 53, 55			*F7	With [CW9] , without [CK8] or [CWC] or [XJW] or [XJ1]
5									COVER, Floor Pan
	1HB21BDVAA	1	2, 3, 6, 7	L	13, 15, 17, 53, 55			*E7	
		1	2, 3, 6, 7	L	13, 15, 17, 53, 55			*AL	
		1	2, 3, 6, 7	L	13, 15, 17, 53, 55			*F7	
6									COVER
	1HB25XDVAA	1	2, 3, 6, 7	L				*A6	
		1	2, 3, 6, 7	L				*E7	
		1	2, 3, 6, 7	L				*F7	
7	68010621AA	1	2, 3, 6, 7	L					SUPPORT, Footrest
8	68010623AA	1	2, 3, 6, 7	L					FOOTREST
9									CLIP
	05125587AA	1	3, 7	L	03, 05				

SPRINTER (VB)

SERIES	LINE	BODY	ENGINE	TRANSMISSION
L = LOWLINE	3 = HD DODGE 2WD 2 = Med. Duty DODGE 2WD	03 = CAB CHASSIS WHEEL BASE 3 05 = CAB CHASSIS WHEEL BASE 5 13 = 119 WB 53 = 119 WB 15 = VAN WHEEL BASE 5 55 = WAGON WHEEL BASE 5 17 = VAN WHEEL BASE 7	EG2 = 3.5L V6 Gas Engine EXM = 3.0L V6 Turbo Diesel Engine	DGZ = 5-Speed Auto W5A380 Transmission

Floor Lining, Entry Paneling & Footrest in Cab
Figure IVB-310

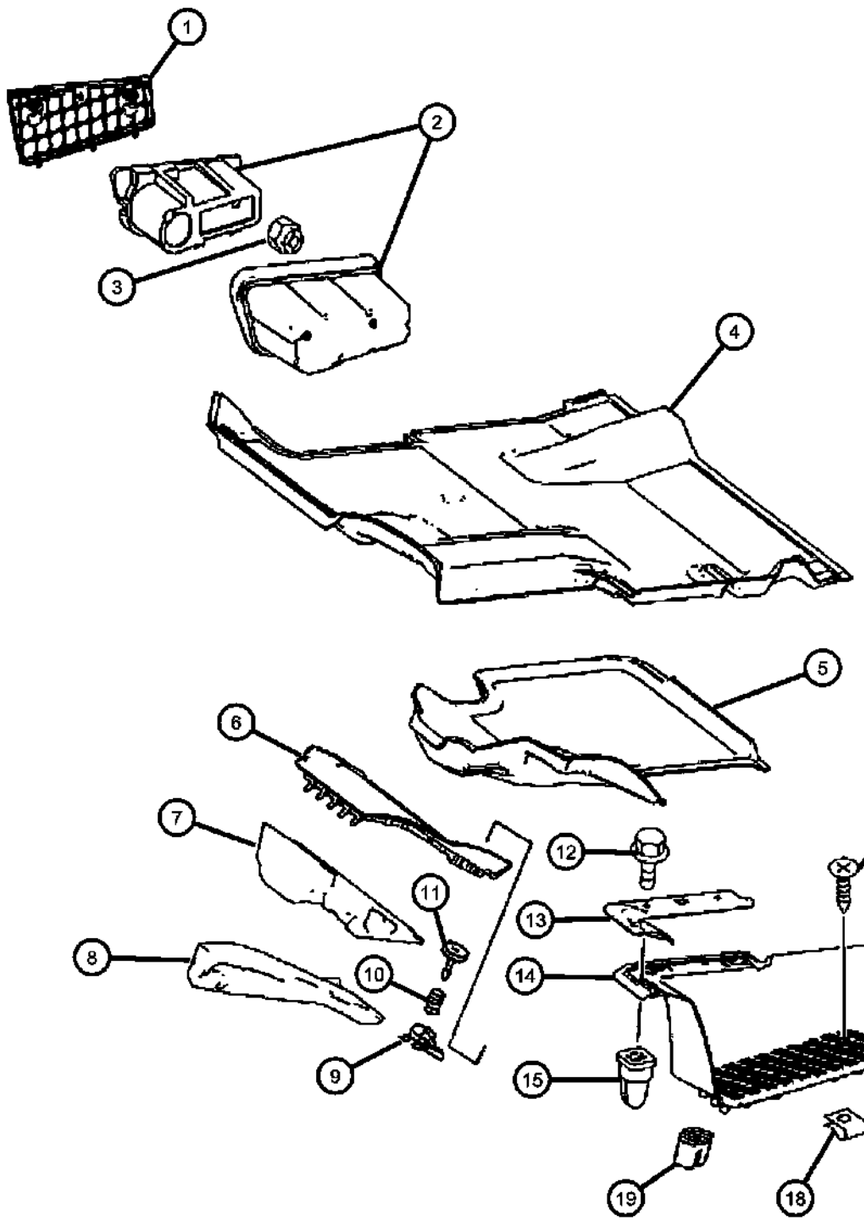

ITEM	PART NUMBER	QTY	LINE	SERIES	BODY	ENGINE	TRANS	TRIM	DESCRIPTION
		1	2, 3, 6, 7	L	13, 15, 17, 53, 55				
10									SPRING
	05125845AA	1	2, 3, 6, 7	L	13, 15, 17, 53, 55				
		1	3, 7	L	03, 05				
11									FASTENER
	05122665AA	1	2, 3, 6, 7	L	15, 17, 13, 53, 55			*A6	
		1	2, 3, 6, 7	L	13, 15, 17, 53, 55			*E7	
		1	2, 3, 6, 7	L	13, 15, 17, 53, 55			*F7	
		1	3, 7	L	03, 05			*A6	
		1	3, 7	L	03, 05			*E7	
		1	3, 7	L	03, 05			*F7	
12	68004673AA	2	2, 3, 6, 7	L					SCREW
13									COVER
	1HB29XDVAA	1	2, 3, 6, 7	L				*A6	Left
		1	2, 3, 6, 7	L				*E7	Left
		1	2, 3, 6, 7	L				*F7	Left
	1HB31XDVAA	1	2, 3, 6, 7	L				*A6	Right
		1	2, 3, 6, 7	L				*E7	Right
		1	2, 3, 6, 7	L				*F7	Right
14									PLATE, Scuff
	1HB26XDVAA	1	2, 3, 6, 7	L				*A6	Left
		1	2, 3, 6, 7	L				*E7	Left
		1	2, 3, 6, 7	L				*F7	Left
	1HB27XDVAA	1	2, 3, 6, 7	L				*A6	Right
		1	2, 3, 6, 7	L				*E7	Right
		1	2, 3, 6, 7	L				*F7	Right
15									NUT, Plastic Snap-in
	05098837AB	4	2, 3, 6, 7	L	13, 15, 17, 53, 55				
		4	3, 7	L	03, 05				

SPRINTER (VB)

SERIES	LINE	BODY	ENGINE	TRANSMISSION
L = LOWLINE	3 = HD DODGE 2WD 2 = Med. Duty DODGE 2WD	03 = CAB CHASSIS WHEEL BASE 3 05 = CAB CHASSIS WHEEL BASE 5 13 = 119 WB 53 = 119 WB 15 = VAN WHEEL BASE 5 55 = WAGON WHEEL BASE 5 17 = VAN WHEEL BASE 7	EG2 = 3.5L V6 Gas Engine EXM = 3.0L V6 Turbo Diesel Engine	DGZ = 5-Speed Auto W5A380 Transmission

Floor Lining, Entry Paneling & Footrest in Cab
Figure IVB-310

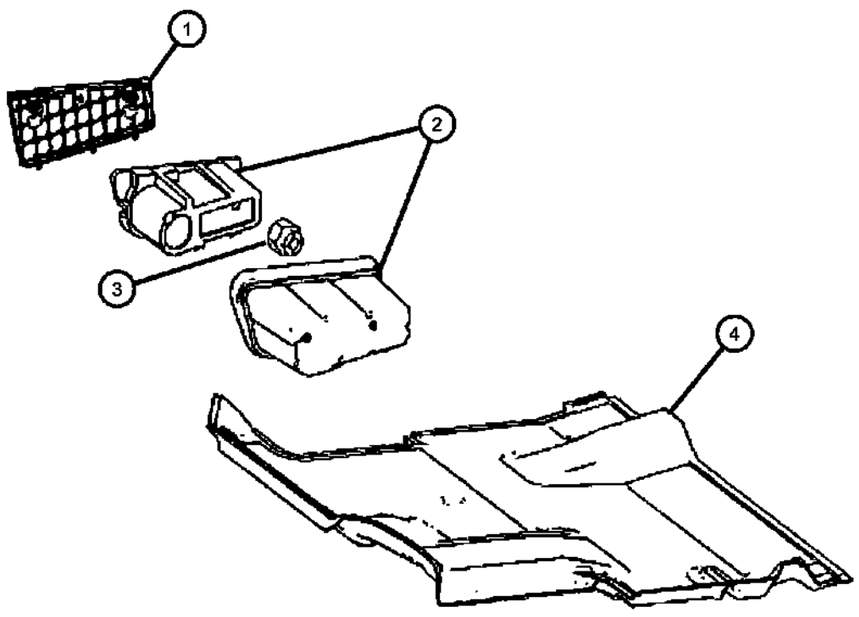

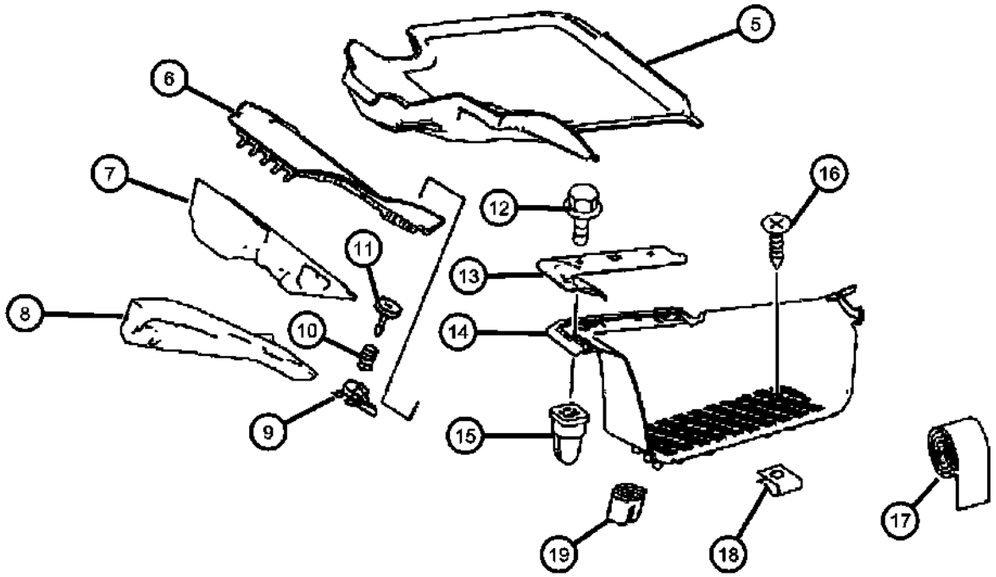

ITEM	PART NUMBER	QTY	LINE	SERIES	BODY	ENGINE	TRANS	TRIM	DESCRIPTION
16	06104575AA	1	2, 3, 6, 7	L					SCREW
17	68009864AA	AR	2, 3, 6, 7	L					TAPE
18	06104736AA	6	2, 3, 6, 7	L					NUT, Clip-On
19									PLUG
	1HB28XDVAA	6	2, 3, 6, 7	L				*F7	
		6	2, 3, 6, 7	L				*A6	
		6	2, 3, 6, 7	L				*E7	

SPRINTER (VB)

SERIES	LINE	BODY	ENGINE	TRANSMISSION
L = LOWLINE	3 = HD DODGE 2WD 2 = Med. Duty DODGE 2WD	03 = CAB CHASSIS WHEEL BASE 3 05 = CAB CHASSIS WHEEL BASE 5 13 = 119 WB 53 = 119 WB 15 = VAN WHEEL BASE 5 55 = WAGON WHEEL BASE 5 17 = VAN WHEEL BASE 7	EG2 = 3.5L V6 Gas Engine EXM = 3.0L V6 Turbo Diesel Engine	DGZ = 5-Speed Auto W5A380 Transmission

AR = use ase required - = Non illustrrated part

<< RETURN TO GROUP INDEX

Floor Lining & Entry Paneling-Wooden Floor
Figure IVB-315

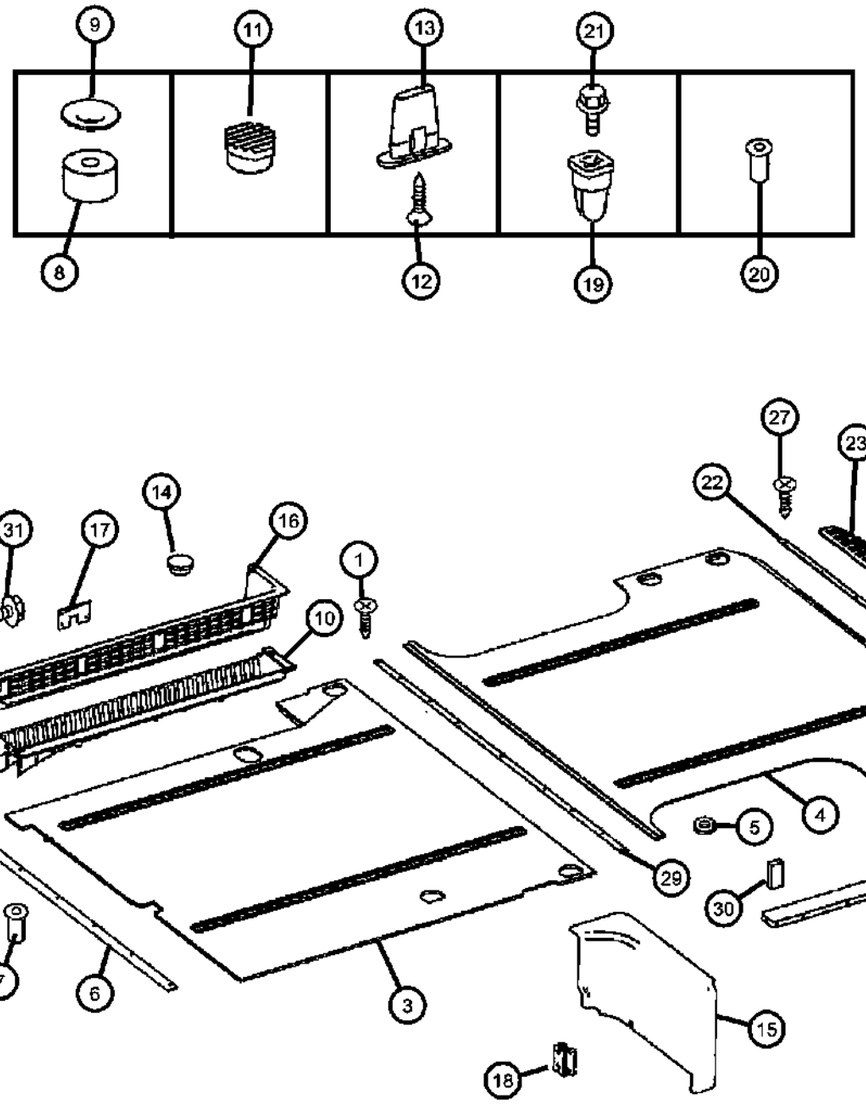

ITEM	PART NUMBER	QTY	LINE	SERIES	BODY	ENGINE	TRANS	TRIM	DESCRIPTION
1	68010627AA	1	2, 3, 6, 7	L	13, 15, 17, 53, 55				SCREW
2	68010736AA	2	2, 3, 6, 7	L	17, 53, 55, 13, 15				SCREW
3									FLOOR, Wooden
	68010659AA	1	2, 3, 6, 7	L	13, 15, 17, 53, 55				
		1	2, 3, 6, 7	L	13, 15, 17, 53, 55				With [HDC+42A+GKA+GEX]
		1	2, 3, 6, 7	L	13, 15, 17, 53, 55				With [42A+HDC+GKA]
		1	2, 6	L	13, 15, 17, 53, 55				With [42A+HDC+GK9]
		1	2, 6	L	13, 15, 17, 53, 55				With [42A+GKA+GEX]
		1	2, 6	L	13, 15, 17, 53, 55				With [42A+GKA+XJY]
		1	2, 6	L	13, 15, 17, 53, 55				With [42A+GKA+GKE]
		1	2, 6	L	53, 55, 13, 15, 17				With [42A+GKA]
		1	2, 6	L	13, 15, 17, 53, 55				With [42A+GKE+GK9+GEX]
		1	2, 6	L	13, 15, 17, 53, 55				With [42A+GKE+GK9+XJY]
		1	2, 6	L	13, 15, 17, 53, 55				With [42A+GK9+GKE]
		1	2, 6	L	13, 15, 17, 53, 55				With [42A+GK9]
		1	2, 3, 6, 7	L	13, 53				With [5CF+42A+CMZ+HDC+GKA]
		1	2, 3, 6, 7	L	13, 53				With [5CF+42A+CMZ+HDC+GK9]
		1	2, 3, 6, 7	L	13, 53				With [5CF+42A+CMZ+GKA]
		1	2, 3, 6, 7	L	13, 53				With [5CF+42A+CMZ+GKA+GKE]
		1	2, 3, 6, 7	L	13, 53				With [5CF+42A+CMZ+GK9]
		1	2, 3, 6, 7	L	53, 13				With [5CF+42A+CMZ+GK9+GKE]
		1	2, 3, 6, 7	L	15, 55				With [5CG+42A+CMZ+HDC+GKA]
		1	2, 3, 6, 7	L	15, 55				With [5CG+42A+CMZ+HDC+GK9]
		1	2, 3, 6, 7	L	15, 55				With [5CG+42A+CMZ+GKA]

SPRINTER (VB)

SERIES	LINE	BODY	ENGINE	TRANSMISSION
L = LOWLINE	3 = HD DODGE 2WD 2 = Med. Duty DODGE 2WD	03 = CAB CHASSIS WHEEL BASE 3 05 = CAB CHASSIS WHEEL BASE 5 13 = 119 WB 53 = 119 WB 15 = VAN WHEEL BASE 5 55 = WAGON WHEEL BASE 5 17 = VAN WHEEL BASE 7	EG2 = 3.5L V6 Gas Engine EXM = 3.0L V6 Turbo Diesel Engine	DGZ = 5-Speed Auto W5A380 Transmission

Floor Lining & Entry Paneling-Wooden Floor
Figure IVB-315

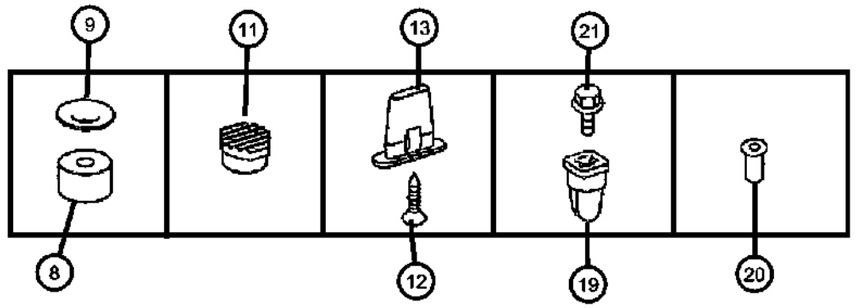

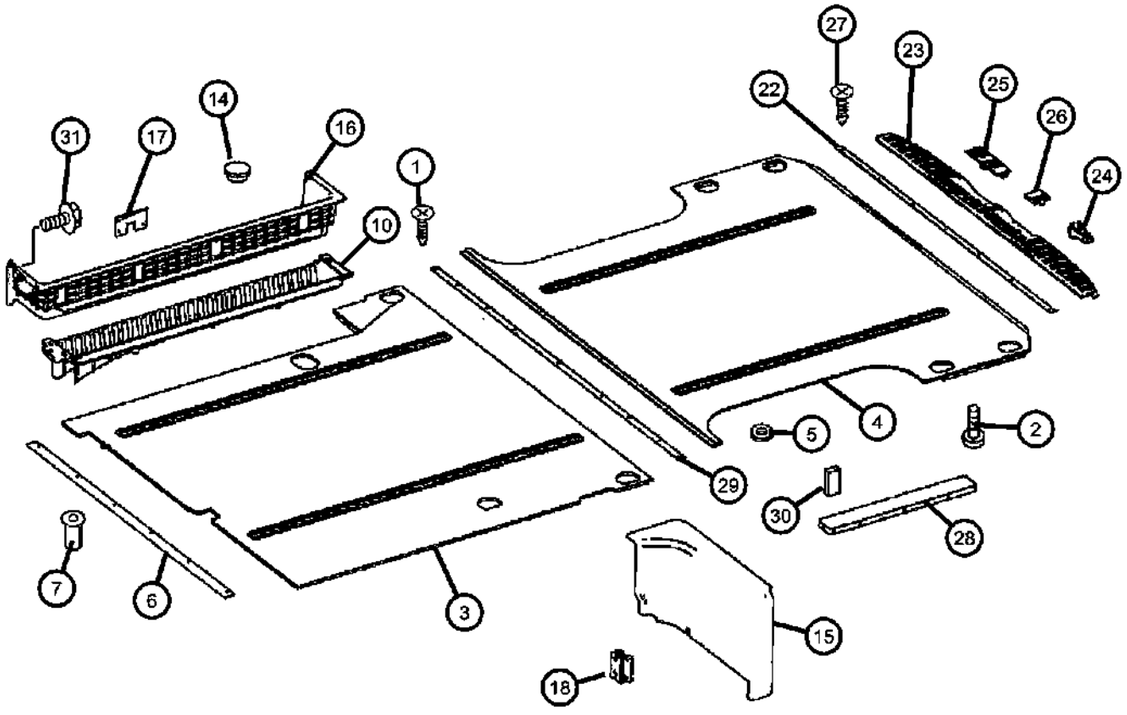

ITEM	PART NUMBER	QTY	LINE	SERIES	BODY	ENGINE	TRANS	TRIM	DESCRIPTION
		1	2, 3, 6, 7	L	15, 55				With [5CG+42A+CMZ+GKA+GKE]
		1	2, 3, 6, 7	L	15, 55				With [5CG+42A+CMZ+GK9]
		1	2, 3, 6, 7	L	15, 55				With [5CG+42A+CMZ+GK9+GKE]
		1	2, 3, 6, 7	L	17				With [5CK+42A+CMZ+HDC+GKA]
		1	2, 3, 6, 7	L	17				With [5CK+42A+CMZ+HDC+GK9]
		1	2, 3, 6, 7	L	17				With [5CK+42A+CMZ+GKA]
		1	2, 3, 6, 7	L	17				With [5CK+42A+CMZ+GKA+GKE]
		1	2, 3, 6, 7	L	17				With [5CK+42A+CMZ+GK9]
		1	2, 3, 6, 7	L	17				With [5CK+42A+CMZ+GK9+GKE]
	68010670AA	1	2, 6	L	13, 15, 17, 53, 55				With [GKA] Right Sliding Door,With [XJY]Cargo Partition w/Sliding Door, With [CW1] Rear Cargo Tie Down Rail System
		1	3, 7	L	15, 17, 55				With [GKA] Right Sliding Door,With [XJY]Cargo Partition w/Sliding Door, With [CW1] Rear Cargo Tie Down Rail System
	68010675AA	1	2, 3, 6, 7	L	13, 15, 17				With [42A+GKE+GK9+XJY+CW1]
		1	2, 6	L	13, 15, 17, 53, 55				With [GKE] Left Sliding Door, No Glass,With [GK9] Without Right Sliding Door, With [XJY]Cargo Partition With Sliding Door, With [CW1] Rear Cargo Tie Down Rail System
		1	3, 7	L	15, 17, 55				With [GKE] Left Sliding Door, No Glass,With [GK9] Without Right Sliding Door, With [XJY]Cargo Partition With Sliding Door, With [CW1] Rear Cargo Tie Down Rail System
	68010679AA	1	2, 6	L	13, 15, 17, 53, 55				With [CW1]
		1	3, 7	L	15, 17, 55				With [CW1]
		1	2, 6	L	13, 15, 17, 53, 55				With [HDC] Rear Auxiliary Heater, With or Without Right and Left Sliding Door,

SPRINTER (VB)

SERIES	LINE	BODY	ENGINE	TRANSMISSION
L = LOWLINE	3 = HD DODGE 2WD 2 = Med. Duty DODGE 2WD	03 = CAB CHASSIS WHEEL BASE 3 05 = CAB CHASSIS WHEEL BASE 5 13 = 119 WB 53 = 119 WB 15 = VAN WHEEL BASE 5 55 = WAGON WHEEL BASE 5 17 = VAN WHEEL BASE 7	EG2 = 3.5L V6 Gas Engine EXM = 3.0L V6 Turbo Diesel Engine	DGZ = 5-Speed Auto W5A380 Transmission

AR = use ase required - = Non illustrrated part

<< RETURN TO GROUP INDEX

Floor Lining & Entry Paneling-Wooden Floor
Figure IVB-315

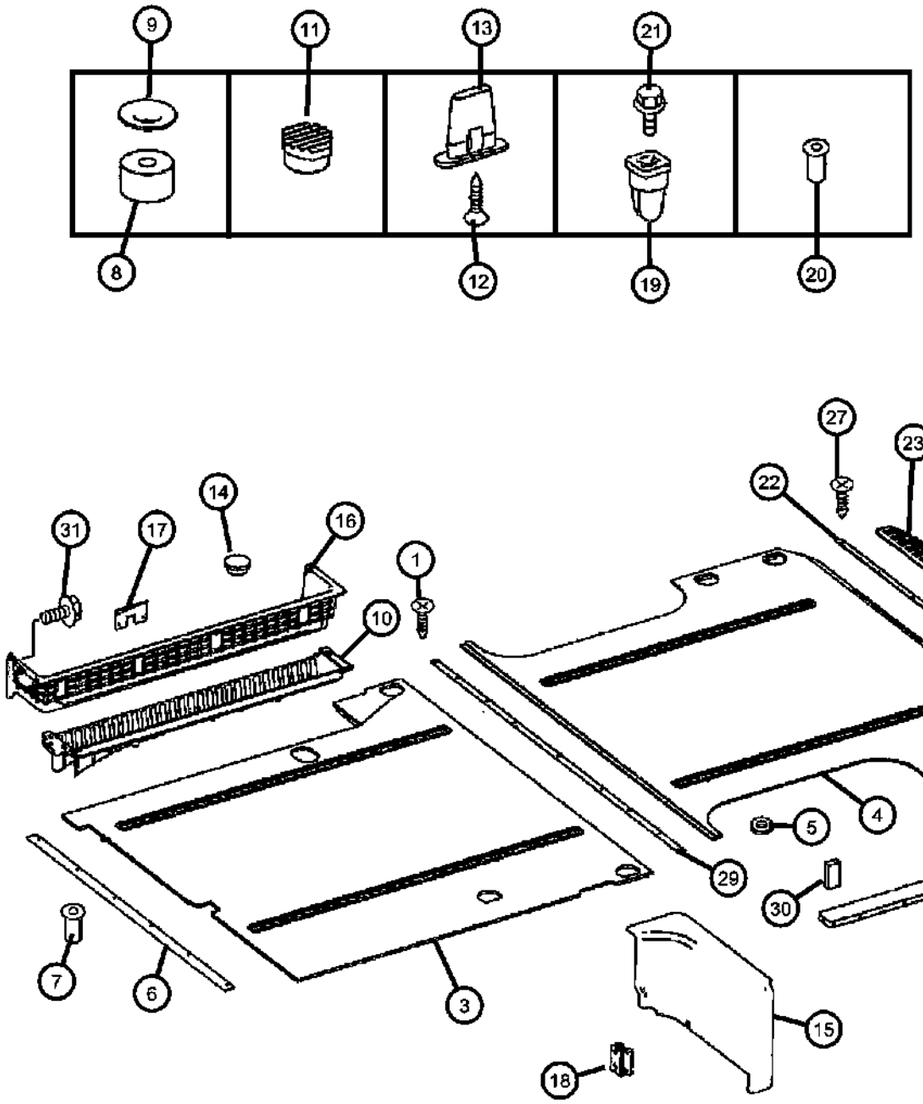

ITEM	PART NUMBER	QTY	LINE	SERIES	BODY	ENGINE	TRANS	TRIM	DESCRIPTION
		1	2, 6	L	13, 15, 17, 53, 55				With [5CF Or 5CG Or 5CK + 42A+CW1+HDC+GK9]
		1	2, 6	L	13, 15, 17, 53, 55				With [5CF Or 5CG Or 5CK + 42A+CW1+GKA+GKE]
		1	2, 6	L	13, 15, 17, 53, 55				With [5CF Or 5CG Or 5CK + 42A+CW1+GKA]
		1	2, 6	L	13, 15, 17, 53, 55				With [5CF Or 5CG Or 5CK+42A+CW1+GK9+GKE]
		1	2, 6	L	13, 15, 17, 53, 55				With [5CF Or 5CG Or 5CK+42A+CW1+GK9]
		1	3, 7	L	15, 17, 55				With [HDC] Rear Auxiliary Heater, With or Without Right and Left Sliding Door,
		1	3, 7	L	55, 15, 17				With [5CG Or 5CK+42A+CW1+HDC+GK9]
		1	3, 7	L	15, 17, 55				With [5CG Or 5CK+42A+CW1+GKA+GKE]
		1	3, 7	L	15, 17, 55				With [5CG Or 5CK+42A+CW1+GKA]
		1	3, 7	L	15, 17, 55				With [5CG Or 5CK+42A+CW1+GK9+GKE]
		1	3, 7	L	15, 17, 55				With [5CG Or 5CK+42A+CW1+GK9]
	68010686AA	1	3, 7	L	13, 53				With [5CF] 144‘ WB,With [XJY]Cargo Partition w/Sliding Door,With [HDC]Rear Auxilary Heater,With [GKE]Left Sliding Door ,No Glass
4									FLOOR, Wooden
	68010702AA	1	2, 3, 6, 7	L	15, 55				
	68010704AA	1	3, 7	L	15, 55				With [CW1] Rear Cargo Tie Down Rain System
	68010708AA	1	2, 6	L	15, 55				With [CW1] Rear Cargo Tie Down Rain System
	68010714AA	1	2, 3, 6, 7	L	13, 53				
	68010725AA	1	3, 7	L	17				With [CW1] Rear Cargo Tie Down Rain System
	68010728AA	1	2, 6	L	17				With [CW1] Rear Cargo Tie Down Rain System
	68010730AA	1	2, 6	L	17				
5									WASHER
	68010654AA	20	2, 6	L	13, 53				

SPRINTER (VB)

SERIES	LINE	BODY	ENGINE	TRANSMISSION
L = LOWLINE	3 = HD DODGE 2WD 2 = Med. Duty DODGE 2WD	03 = CAB CHASSIS WHEEL BASE 3 05 = CAB CHASSIS WHEEL BASE 5 13 = 119 WB 53 = 119 WB 15 = VAN WHEEL BASE 5 55 = WAGON WHEEL BASE 5 17 = VAN WHEEL BASE 7	EG2 = 3.5L V6 Gas Engine EXM = 3.0L V6 Turbo Diesel Engine	DGZ = 5-Speed Auto W5A380 Transmission

Floor Lining & Entry Paneling-Wooden Floor
Figure IVB-315

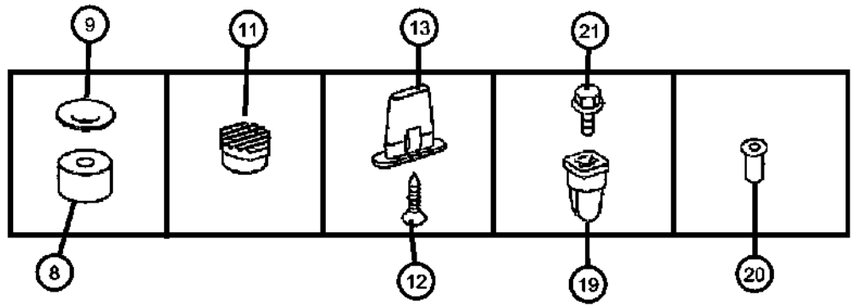

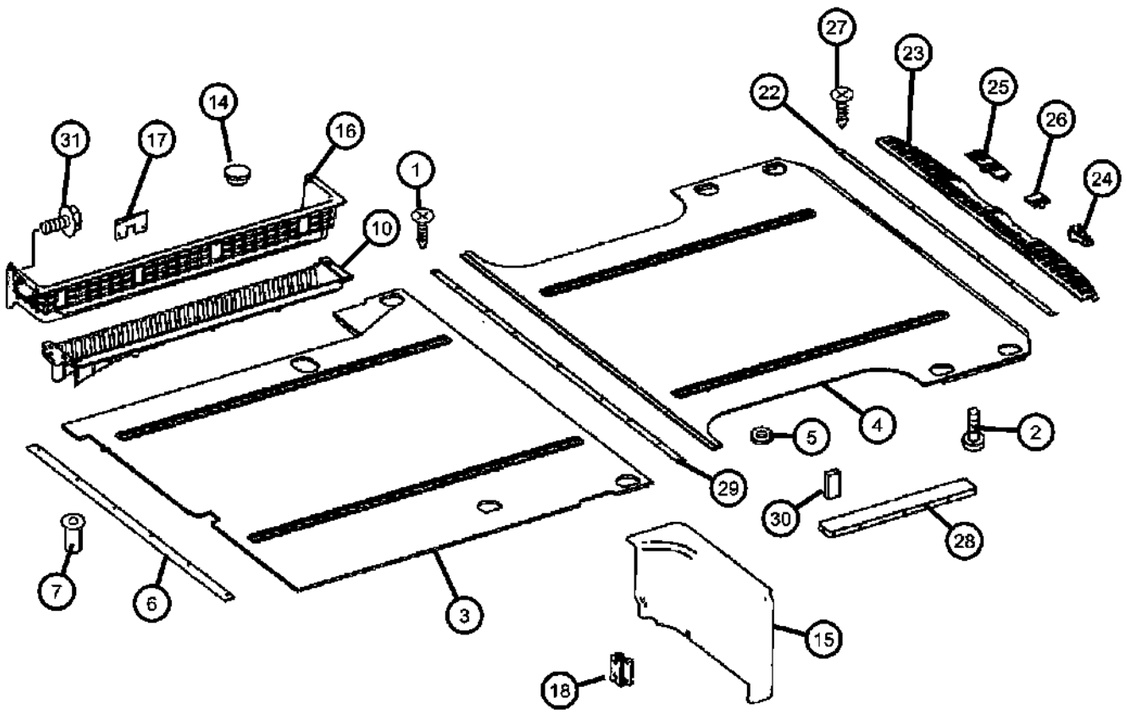

ITEM	PART NUMBER	QTY	LINE	SERIES	BODY	ENGINE	TRANS	TRIM	DESCRIPTION
		20	3, 7	L	13, 53				
		24	2, 6	L	15, 55				
		24	3, 7	L	15, 55				
		26	2, 6	L	17				
		28	3, 7	L	17				
6									MOLDING, Cargo Area Carpet
	68010733AA	1	2, 3, 6, 7	L	13, 15, 17, 53, 55				
	68010734AA	1	2, 3, 6, 7	L	13, 15, 17, 53, 55				With [GKA] Right Sliding Door, With [GKE] Left Sliding Door, No Glass
	68010735AA	1	2, 3, 6, 7	L	13, 15, 17, 53, 55				With [GK9] Without Right Sliding Door
7									NUTSERT, Rivet
	06105175AA	2	2, 3, 6, 7	L	55, 13, 15, 17, 53				
		2	3, 7	L	03, 05				
		3	3, 7	L	13, 15, 17, 53, 55				
8	68010737AA	2	2, 3, 6, 7	L	13, 15, 17, 53, 55				BUSHING
9	68010738AA	2	2, 3, 6, 7	L	13, 15, 17, 53, 55				COVER
10									PAD, Side Cargo Door Sill
	1HB33DX8AA	1	2, 3, 6, 7	L	13, 15, 17, 53, 55			*A6	[A6], Left
		1	2, 3, 6, 7	L	13, 15, 17, 53, 55			*E7	[E7], Left
		1	2, 3, 6, 7	L	13, 15, 17, 53, 55			*F7	[F7], Left
	1HB36DX8AA	1	2, 3, 6, 7	L	13, 15, 17, 53, 55			*A6	[A6], Right
		1	2, 3, 6, 7	L	13, 15, 17, 53, 55			*E7	[E7], Right
		1	2, 3, 6, 7	L	13, 15, 17, 53, 55			*F7	[F7], Right
11									PLUG
	1HB34DX8AA	1	2, 3, 6, 7	L	13, 15, 17, 53, 55			*A6	[A6]

SPRINTER (VB)

SERIES	LINE	BODY	ENGINE	TRANSMISSION
L = LOWLINE	3 = HD DODGE 2WD 2 = Med. Duty DODGE 2WD	03 = CAB CHASSIS WHEEL BASE 3 05 = CAB CHASSIS WHEEL BASE 5 13 = 119 WB 53 = 119 WB 15 = VAN WHEEL BASE 5 55 = WAGON WHEEL BASE 5 17 = VAN WHEEL BASE 7	EG2 = 3.5L V6 Gas Engine EXM = 3.0L V6 Turbo Diesel Engine	DGZ = 5-Speed Auto W5A380 Transmission

Floor Lining & Entry Paneling-Wooden Floor
Figure IVB-315

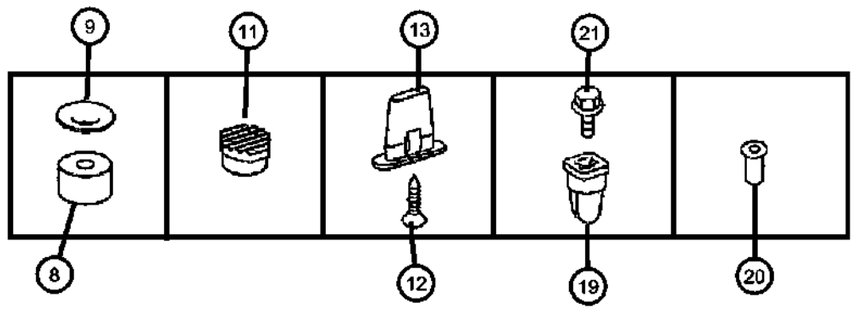

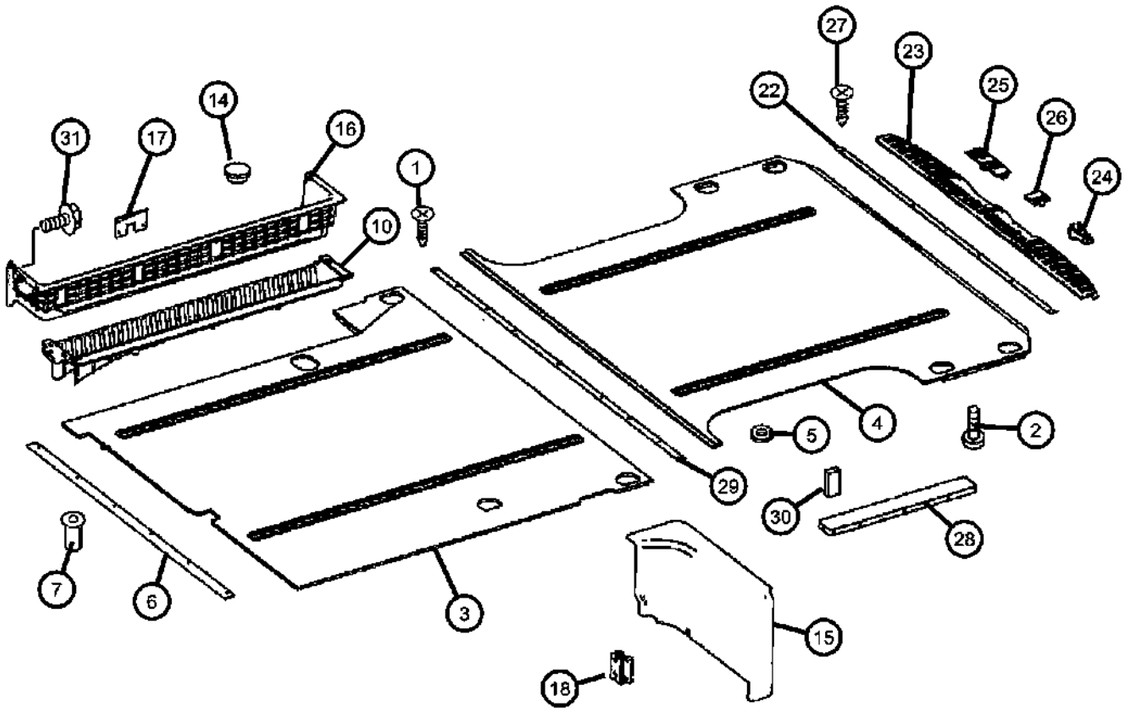

ITEM	PART NUMBER	QTY	LINE	SERIES	BODY	ENGINE	TRANS	TRIM	DESCRIPTION
		1	2, 3, 6, 7	L	53, 55, 13, 15, 17			*E7	[E7]
		1	2, 3, 6, 7	L	13, 15, 17, 53, 55			*F7	[F7]
12									SCREW
	06104142AA	2	2, 3, 6, 7	L	13, 15, 17, 53, 55				Sliding Door Entrance M6 x 16
	06104150AA	1	2, 3, 6, 7	L	13, 15, 17, 53, 55				Sliding Door Entrance M6 x 60
	06104610AA	2	2, 3, 6, 7	L					Sliding Door Entrance 4.2 X 19
13	68029953AA	1	2, 3, 6, 7	L	13, 15, 17, 53, 55				INSERT
14									PLUG
	1HB35DX8AA	1	2, 3, 6, 7	L	13, 15, 17, 53, 55			*A6	[A6]
		1	2, 3, 6, 7	L	13, 15, 17, 53, 55			*E7	[E7]
		1	2, 3, 6, 7	L	13, 15, 17, 53, 55			*F7	[F7]
15									PLUG
	1HB41XDVAA	1	2, 3, 6, 7	L	13, 15, 17, 53, 55			*A6	[A6], Left
		1	2, 3, 6, 7	L	13, 15, 17, 53, 55			*E7	[E7], Left
		1	2, 3, 6, 7	L	13, 15, 17, 53, 55			*F7	[F7], Left
	1HB47XDVAA	1	2, 3, 6, 7	L	55, 13, 15, 17, 53			*A6	[A6], Right
		1	2, 3, 6, 7	L	13, 15, 17, 53, 55			*E7	[E7], Right
		1	2, 3, 6, 7	L	13, 15, 17, 53, 55			*F7	[F7], Right
16									PANEL
	1HB37NCVAA	1	2, 3, 6, 7	L	13, 15, 17, 53, 55			*E7	[E7] With [LBB] Lamps
		1	2, 3, 6, 7	L	13, 15, 17, 53, 55			*A6	[A6] With [LBB] Lamps
		1	2, 3, 6, 7	L	13, 15, 17, 53, 55			*F7	[F7] With [LBB] Lamps
	1HB38NCVAA	1	2, 3, 6, 7	L	13, 15, 17, 53, 55			*E7	[E7] Without [LBB] Lamps

SPRINTER (VB)

SERIES	LINE	BODY	ENGINE	TRANSMISSION
L = LOWLINE	3 = HD DODGE 2WD 2 = Med. Duty DODGE 2WD	03 = CAB CHASSIS WHEEL BASE 3 05 = CAB CHASSIS WHEEL BASE 5 13 = 119 WB 53 = 119 WB 15 = VAN WHEEL BASE 5 55 = WAGON WHEEL BASE 5 17 = VAN WHEEL BASE 7	EG2 = 3.5L V6 Gas Engine EXM = 3.0L V6 Turbo Diesel Engine	DGZ = 5-Speed Auto W5A380 Transmission

Floor Lining & Entry Paneling-Wooden Floor
Figure IVB-315

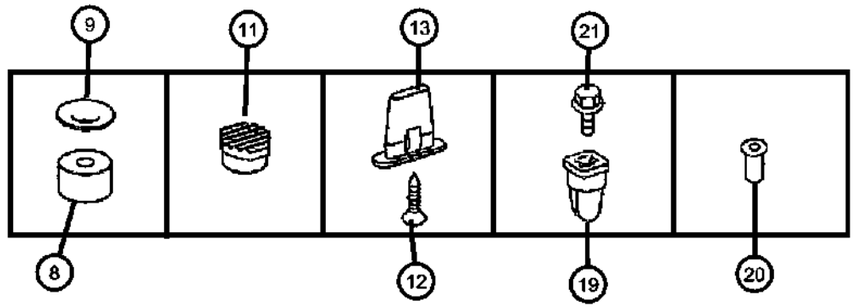

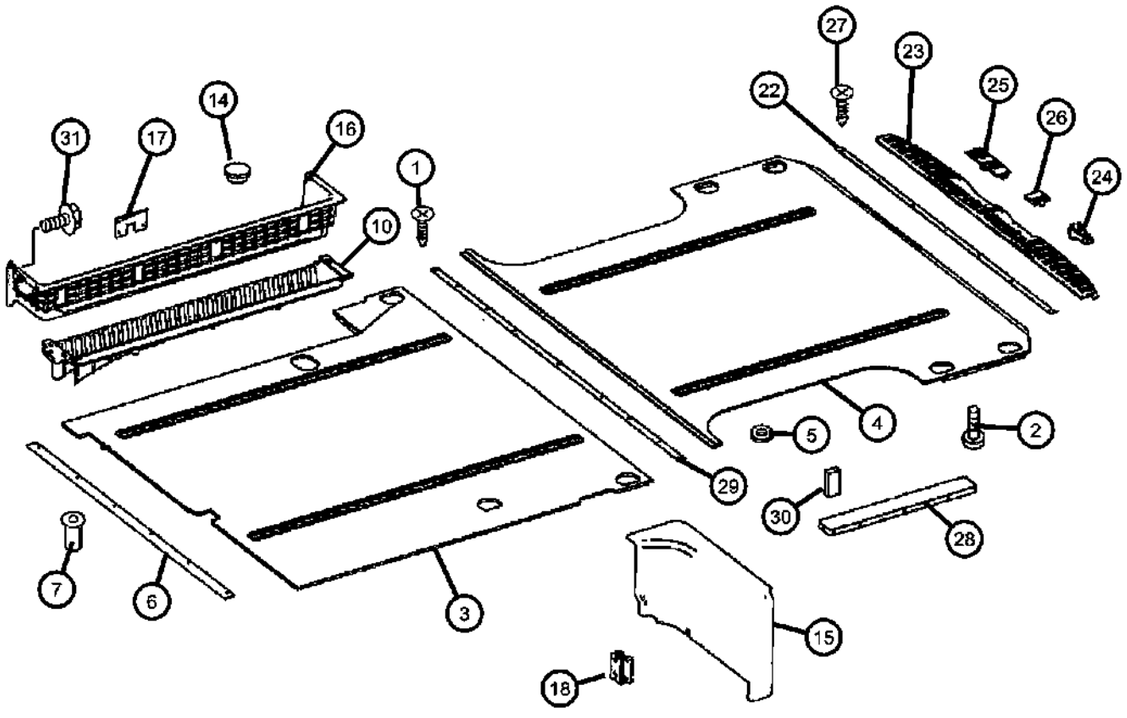

ITEM	PART NUMBER	QTY	LINE	SERIES	BODY	ENGINE	TRANS	TRIM	DESCRIPTION
		1	2, 3, 6, 7	L	13, 15, 17, 53, 55			*A6	[A6] Without [LBB] Lamps
		1	2, 3, 6, 7	L	13, 15, 17, 53, 55			*F7	[F7] Without [LBB] Lamps
17									CLIP, Floor Trim
	05125584AA	1	2, 3, 6, 7	L	03, 05				
		1	2, 3, 6, 7	L	13, 15, 17, 53, 55				
18	05101464AA	2	2, 3, 6, 7	L	13, 15, 17, 53, 55				CLIPRight & Left
19									NUT, Plastic Snap-in
	05098837AB	2	3, 7	L	03, 05				
		2	2, 3, 6, 7	L	15, 17, 53, 55, 13				
20	05134061AA	8	2, 3, 6, 7	L	13, 15, 17, 53, 55				RIVET
21									SCREW
	05104609AA	2	2, 3, 6, 7	L	13, 15, 17, 53, 55				4.8 X 13
		4	3, 7	L	03, 05				4.8 X 13
22	68010771AA	1	2, 3, 6, 7	L	13, 15, 17, 53, 55				MOLDING, Cargo Area Carpet
23									SILL COVER, Interior
	1HB48DX9AA	1	2, 3, 6, 7	L	13, 15, 17, 53, 55			*A6	[A6]
		1	2, 3, 6, 7	L	13, 15, 17, 53, 55			*E7	[E7]
		1	2, 3, 6, 7	L	13, 15, 17, 53, 55			*F7	[F7]
24	05104536AA	11	2, 3, 6, 7	L	13, 15, 17, 53, 55				RETAINER
25									COVER
	1HB49DX9AA	2	2, 3, 6, 7	L	13, 15, 17, 53, 55			*A6	[A6]
		2	2, 3, 6, 7	L	13, 15, 17, 53, 55			*E7	[E7]
		2	2, 3, 6, 7	L	13, 15, 17, 53, 55			*F7	[F7]
26									COVER
	1HB50DX9AA	2	2, 3, 6, 7	L	13, 15, 17, 53, 55			*A6	[A6]

SPRINTER (VB)

SERIES	LINE	BODY	ENGINE	TRANSMISSION
L = LOWLINE	3 = HD DODGE 2WD 2 = Med. Duty DODGE 2WD	03 = CAB CHASSIS WHEEL BASE 3 05 = CAB CHASSIS WHEEL BASE 5 13 = 119 WB 53 = 119 WB 15 = VAN WHEEL BASE 5 55 = WAGON WHEEL BASE 5 17 = VAN WHEEL BASE 7	EG2 = 3.5L V6 Gas Engine EXM = 3.0L V6 Turbo Diesel Engine	DGZ = 5-Speed Auto W5A380 Transmission

Floor Lining & Entry Paneling-Wooden Floor
Figure IVB-315

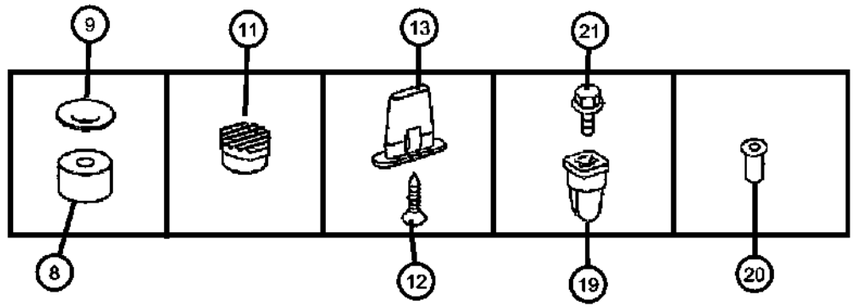

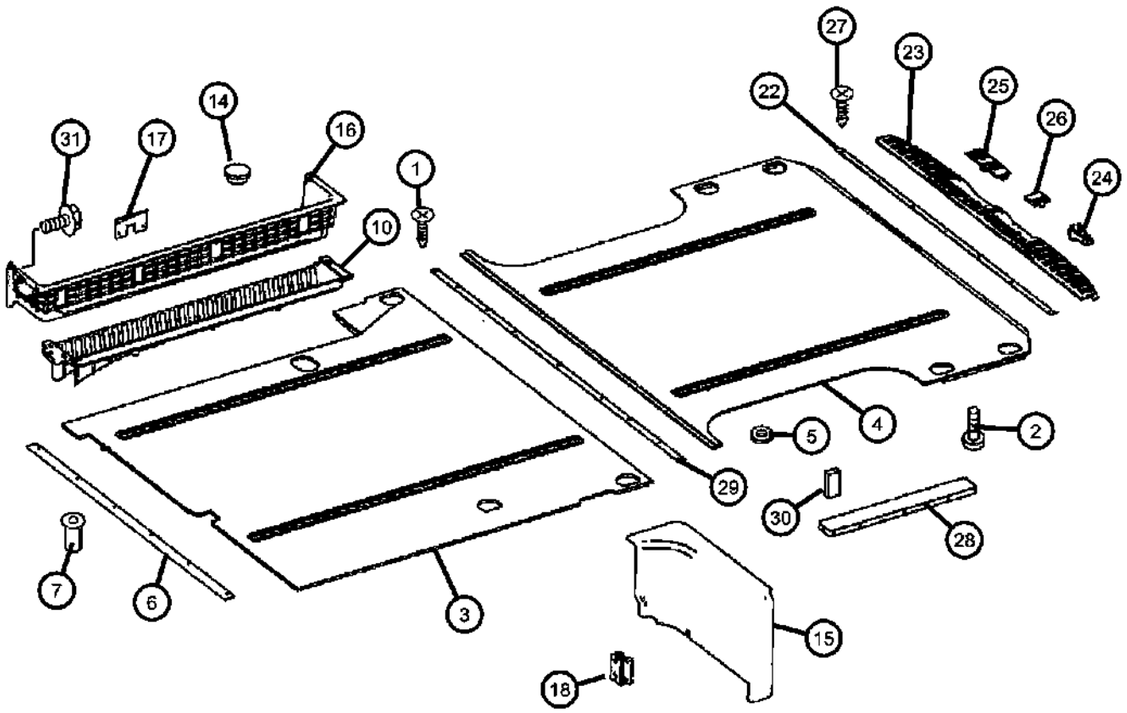

ITEM	PART NUMBER	QTY	LINE	SERIES	BODY	ENGINE	TRANS	TRIM	DESCRIPTION
		2	2, 3, 6, 7	L	13, 15, 17, 53, 55			*E7	[E7]
		2	2, 3, 6, 7	L	13, 15, 17, 53, 55			*F7	[F7]
27	68010627AA	1	2, 3, 6, 7	L	13, 15, 17, 53, 55				SCREW
28	68010772AA	1	2, 3, 6, 7	L	13, 15, 17, 53, 55				COVER
29	68010624AA	1	2, 3, 6, 7	L	13, 15, 17, 53, 55				MOLDING, Cargo Area Carpet
30	68010773AA	3	2, 3, 6, 7	L	13, 15, 17, 53, 55				INSULATION
31	05104609AA	2	2, 3, 6, 7	L	15, 17, 53, 55, 13				SCREW

SPRINTER (VB)

SERIES	LINE	BODY	ENGINE	TRANSMISSION
L = LOWLINE	3 = HD DODGE 2WD 2 = Med. Duty DODGE 2WD	03 = CAB CHASSIS WHEEL BASE 3 05 = CAB CHASSIS WHEEL BASE 5 13 = 119 WB 53 = 119 WB 15 = VAN WHEEL BASE 5 55 = WAGON WHEEL BASE 5 17 = VAN WHEEL BASE 7	EG2 = 3.5L V6 Gas Engine EXM = 3.0L V6 Turbo Diesel Engine	DGZ = 5-Speed Auto W5A380 Transmission

AR = use ase required - = Non illustrrated part

<< RETURN TO GROUP INDEX

Front Door Trim Panel
Figure IVB-410

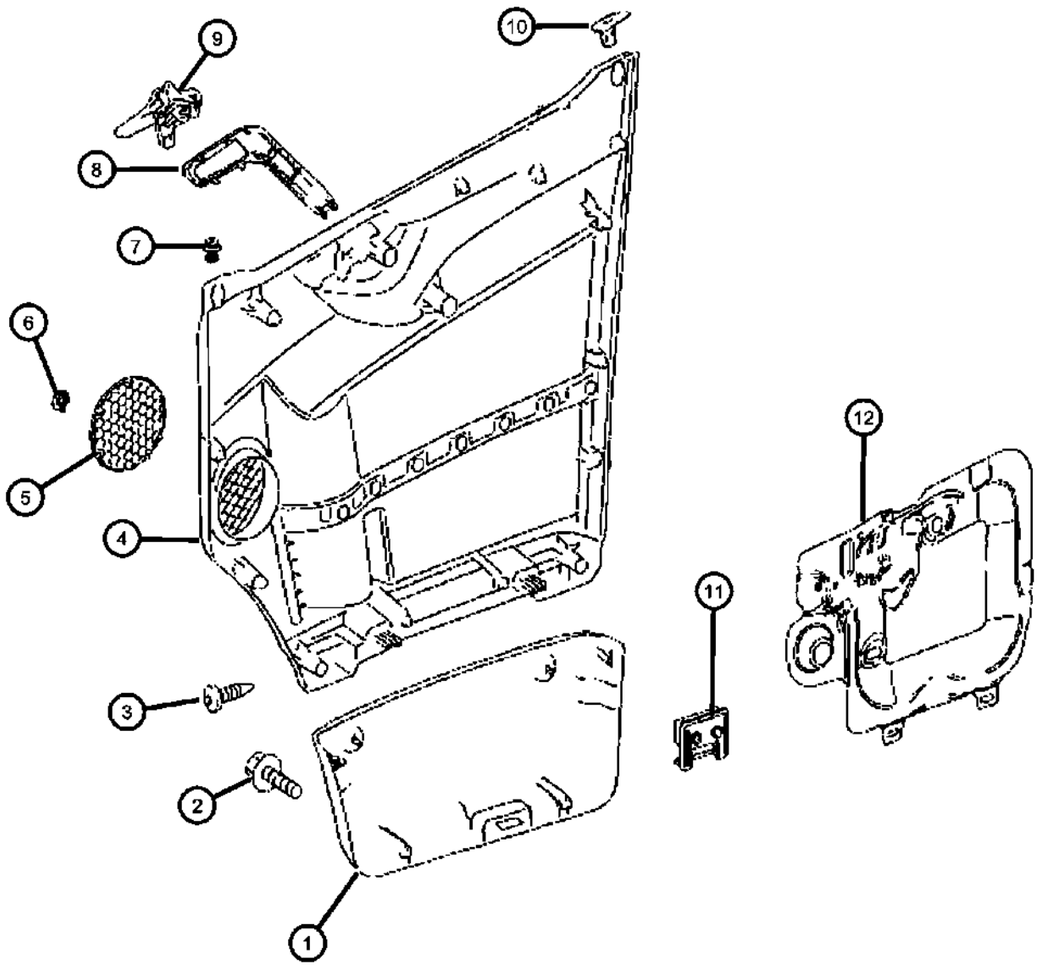

ITEM	PART NUMBER	QTY	LINE	SERIES	BODY	ENGINE	TRANS	TRIM	DESCRIPTION
1									PANEL, Front Door Trim
	1HE39XDVAA	1	2, 3, 6, 7	L				*A6	Left
		1	3, 6, 7, 2	L				*E7	Left
		1	2, 3, 6, 7	L				*F7	Left
	1HE40XDVAA	1	2, 3, 6, 7	L				*A6	Right
		1	2, 3, 6, 7	L				*F7	Right
		1	2, 3, 6, 7	L				*E7	Right
2	06104142AA	2	2, 3, 6, 7	L	13, 15, 17, 53, 55				SCREW
3	06104666AA	2	2, 3, 6, 7	L	13, 15, 17, 53, 55				SCREW
4									PANEL, Front Door
	1HE36XDVAA	1	2, 3, 6, 7	L				*A6	Left
		1	2, 3, 6, 7	L				*E7	Left
		1	2, 3, 6, 7	L				*F7	Left
	1HE37XDVAA	1	2, 3, 6, 7	L				*A6	Right
		1	2, 3, 6, 7	L				*E7	Right
		1	2, 3, 6, 7	L				*F7	Right
5									GRILLE, Speaker
	1HE42XDVAA	2	2, 3, 6, 7	L				*A6	
		2	2, 3, 6, 7	L				*E7	
		2	2, 3, 6, 7	L				*F7	
6	68010115AA	1	2, 3, 6, 7	L					COVER
7	68006484AA	11	6, 7, 2, 3	L					RETAINER
8									COVER
	68010036AA	1	2, 3, 6, 7	L					Left
	68010115AA	1	2, 3, 6, 7	L					Right
9									HANDLE, Inside Release
	1HE51XDVAA	1	2, 3, 6, 7	L				*A6	Left
		1	2, 3, 6, 7	L				*E7	Left
		1	2, 3, 6, 7	L				*F7	Left
	1HE52XDVAA	1	2, 3, 6, 7	L				*A6	Right
		1	2, 3, 6, 7	L				*E7	Right

SPRINTER (VB)

SERIES	LINE	BODY	ENGINE	TRANSMISSION
L = LOWLINE	3 = HD DODGE 2WD 2 = Med. Duty DODGE 2WD	03 = CAB CHASSIS WHEEL BASE 3 05 = CAB CHASSIS WHEEL BASE 5 13 = 119 WB 53 = 119 WB 15 = VAN WHEEL BASE 5 55 = WAGON WHEEL BASE 5 17 = VAN WHEEL BASE 7	EG2 = 3.5L V6 Gas Engine EXM = 3.0L V6 Turbo Diesel Engine	DGZ = 5-Speed Auto W5A380 Transmission

AR = use ase required - = Non illustrrated part

<< RETURN TO GROUP INDEX

Front Door Trim Panel
Figure IVB-410

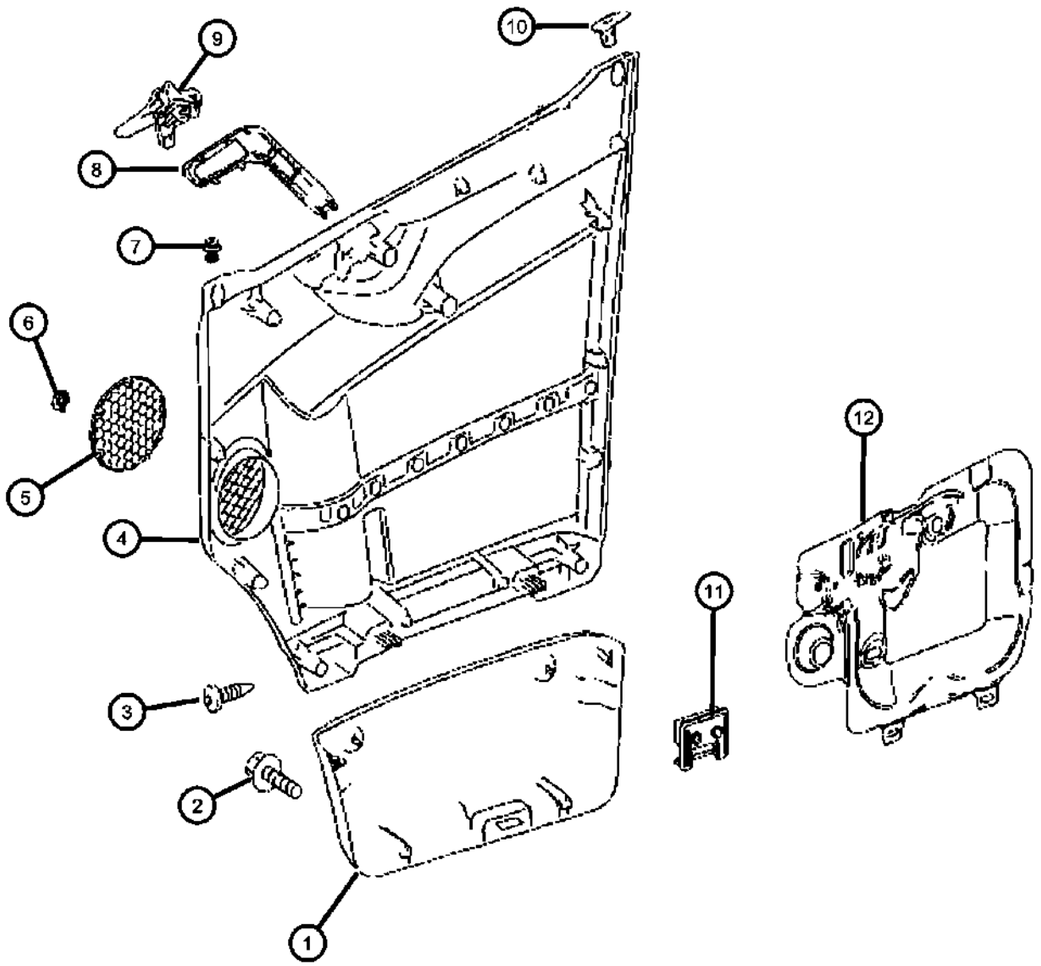

ITEM	PART NUMBER	QTY	LINE	SERIES	BODY	ENGINE	TRANS	TRIM	DESCRIPTION
		1	2, 3, 6, 7	L				*F7	Right
10									BEZEL, Lock Knob
	1HE43XDVAA	1	2, 3, 6, 7	L				*A6	Right
		1	2, 3, 6, 7	L				*E7	Right
		1	2, 3, 6, 7	L				*F7	Right
	1HE44XDVAA	1	2, 3, 6, 7	L				*A6	Left
		1	2, 3, 6, 7	L				*E7	Left
		1	7, 2, 3, 6	L				*F7	Left
11	05123763AA	2	2, 3, 6, 7	L	13, 15, 17, 53, 55				BEZEL, Door Trim Panel
12									SHIELD, Door
	68010044AA	1	2, 3, 6, 7	L					Right
	68010045AA	1	2, 3, 6, 7	L					Left

SPRINTER (VB)

SERIES	LINE	BODY	ENGINE	TRANSMISSION
L = LOWLINE	3 = HD DODGE 2WD 2 = Med. Duty DODGE 2WD	03 = CAB CHASSIS WHEEL BASE 3 05 = CAB CHASSIS WHEEL BASE 5 13 = 119 WB 53 = 119 WB 15 = VAN WHEEL BASE 5 55 = WAGON WHEEL BASE 5 17 = VAN WHEEL BASE 7	EG2 = 3.5L V6 Gas Engine EXM = 3.0L V6 Turbo Diesel Engine	DGZ = 5-Speed Auto W5A380 Transmission

Sliding Door Trim Panel
Figure IVB-420

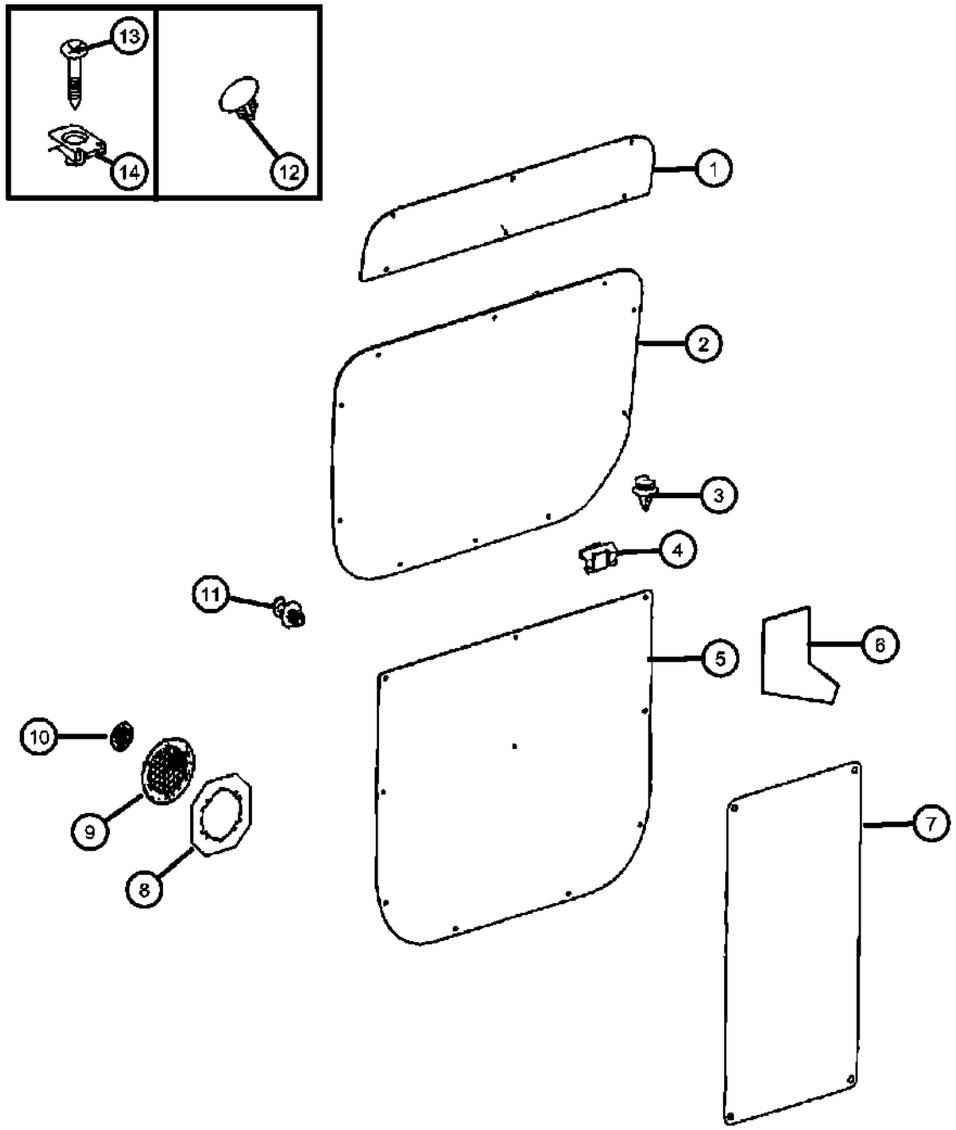

ITEM	PART NUMBER	QTY	LINE	SERIES	BODY	ENGINE	TRANS	TRIM	DESCRIPTION
1	68010045AA	1							PANEL, (NOT SERVICED)
2									PANEL, Side Trim
	1HB56XDVAA	1	2, 3, 6, 7	L	13, 15, 17, 53, 55			*A6	Right
		1	2, 3, 6, 7	L	13, 15, 17, 53, 55			*E7	Right
		1	2, 3, 6, 7	L	13, 15, 17, 53, 55			*F7	Right
	1HB57XDVAA	1	2, 3, 6, 7	L	13, 15, 17, 53, 55			*A6	
		1	2, 3, 6, 7	L	15, 17, 53, 55, 13			*E7	
		1	2, 3, 6, 7	L	13, 15, 17, 53, 55			*F7	Left
3	68005152AA	12	7, 2, 3, 6	L	13, 15, 17, 53, 55				FASTENER
4	68005152AA	12							CLIP, (NOT SERVICED)
5									PANEL, Side Trim
	1HB51XDVAA	1	2, 3, 6, 7	L	13, 15, 17			*A6	With [CMP], Left
	1HB531E7AA	1	2, 3, 6, 7	L	53, 55			*A6	With [GKA] [4UW] [RC5], Right
		1	2, 3, 6, 7	L	53, 55			*E7	With [GKA] [4UW] [RC5], Right
		1	2, 3, 6, 7	L	53, 55			*F7	With [GKA] [4UW] [RC5], Right
	1HB541E7AA	1	2, 3, 6, 7	L	53, 55			*A6	With [GKA] [4UW], Left
		1	2, 3, 6, 7	L	53, 55			*E7	With [GKA] [4UW], Left
		1	2, 3, 6, 7	L	53, 55			*F7	With [GKA] [4UW], Left
	1HB55XDVAA	1	2, 3, 6, 7	L	13, 15, 17			*A6	With [GKA] or [GKE], Right
		1	2, 3, 6, 7	L	13, 15, 17			*E7	With [CMP], Left
		1	2, 3, 6, 7	L	13, 15, 17			*F7	With [CMP], Left
		1	2, 3, 6, 7	L	13, 15, 17			*E7	With [GKA] or [GKE], Right
		1	2, 3, 6, 7	L	13, 15, 17			*F7	With [GKA] or [GKE], Right
6	68010275AA	1	2, 3, 6, 7	L	13, 15, 17, 53, 55				SHIELD, Door
7	68010275AA	1							COVER, (NOT SERVICED)
8	68010291AA	1	2, 3, 6, 7	L	13, 15, 17, 53, 55				REINFORCEMENT
9									GRILLE, Speaker
	1HB60XDVAA	4	2, 3, 6, 7	L	53, 55			*A6	

SPRINTER (VB)

SERIES	LINE	BODY	ENGINE	TRANSMISSION
L = LOWLINE	3 = HD DODGE 2WD 2 = Med. Duty DODGE 2WD	03 = CAB CHASSIS WHEEL BASE 3 05 = CAB CHASSIS WHEEL BASE 5 13 = 119 WB 53 = 119 WB 15 = VAN WHEEL BASE 5 55 = WAGON WHEEL BASE 5 17 = VAN WHEEL BASE 7	EG2 = 3.5L V6 Gas Engine EXM = 3.0L V6 Turbo Diesel Engine	DGZ = 5-Speed Auto W5A380 Transmission

Sliding Door Trim Panel
Figure IVB-420

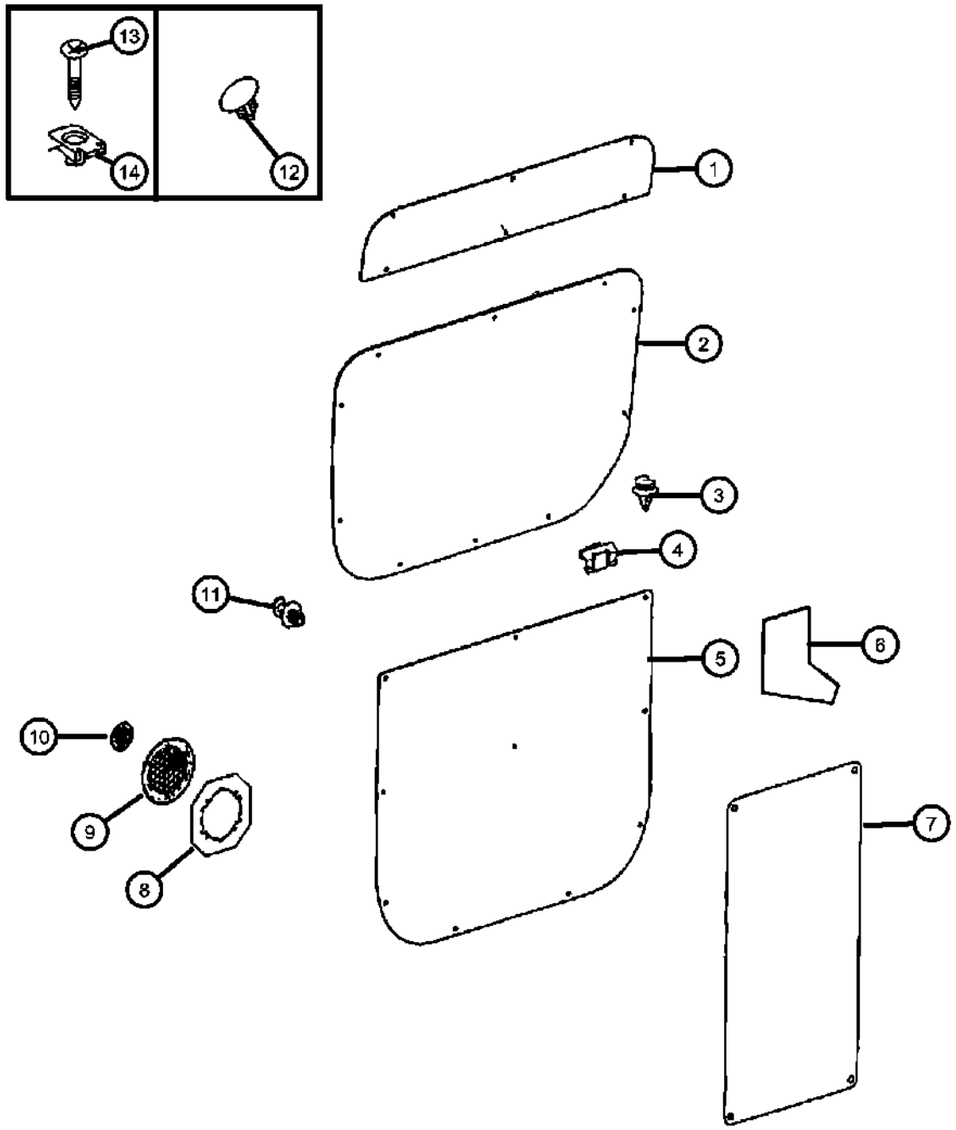

ITEM	PART NUMBER	QTY	LINE	SERIES	BODY	ENGINE	TRANS	TRIM	DESCRIPTION
		4	2, 3, 6, 7	L	53, 55			*F7	
10									GRILLE, Speaker
	1HB61XDVAA	1	2, 3, 6, 7	L	53, 55			*E7	
		1	2, 3, 6, 7	L	53, 55			*F7	
		1	2, 3, 6, 7	L	53, 55			*A6	
11	68006483AA	8	2, 3, 6, 7	L	13, 15, 17, 53, 55				RIVET
12	05103818AA	10	2, 3, 6, 7	L	13, 15, 17, 53, 55				PIN, Push
13	05104609AA	2	2, 3, 6, 7	L	13, 15, 17, 53, 55				SCREW
14	05125859AA	10	2, 3, 6, 7	L	13, 15, 17, 53, 55				U-NUT

SPRINTER (VB)

SERIES	LINE	BODY	ENGINE	TRANSMISSION
L = LOWLINE	3 = HD DODGE 2WD 2 = Med. Duty DODGE 2WD	03 = CAB CHASSIS WHEEL BASE 3 05 = CAB CHASSIS WHEEL BASE 5 13 = 119 WB 53 = 119 WB 15 = VAN WHEEL BASE 5 55 = WAGON WHEEL BASE 5 17 = VAN WHEEL BASE 7	EG2 = 3.5L V6 Gas Engine EXM = 3.0L V6 Turbo Diesel Engine	DGZ = 5-Speed Auto W5A380 Transmission

Cargo Door Trim Panel
Figure IVB-430

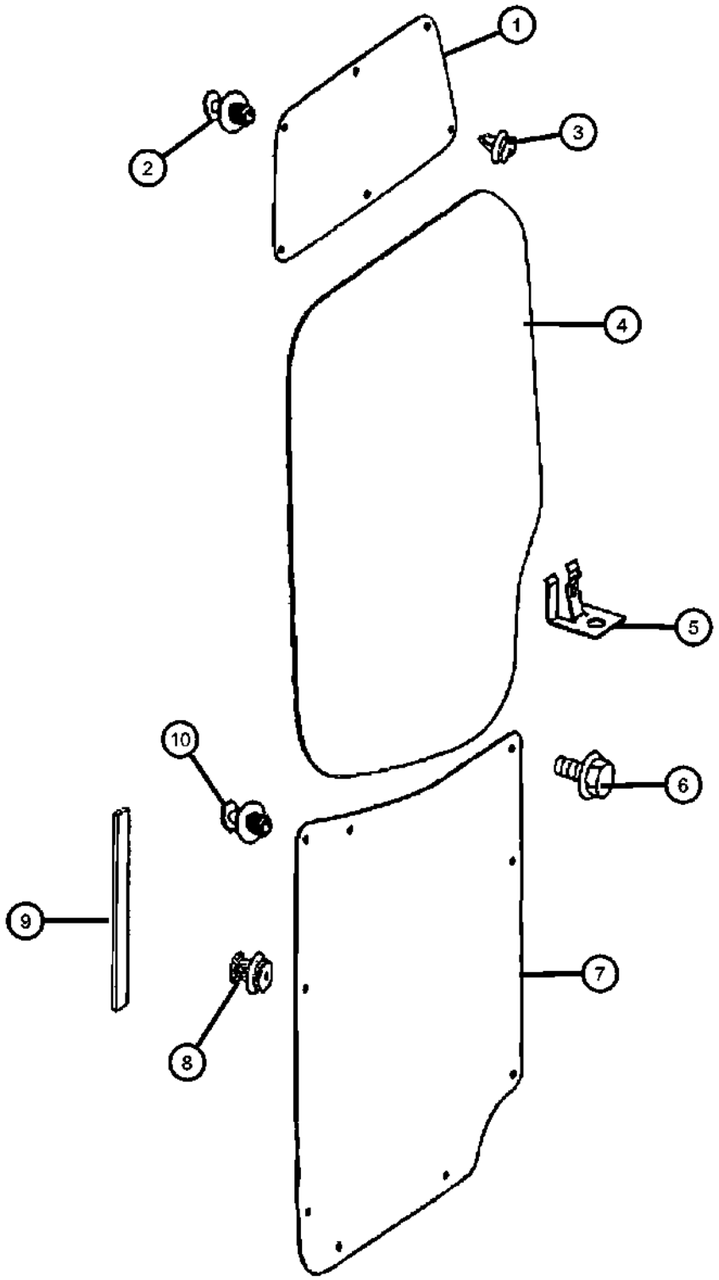

ITEM	PART NUMBER	QTY	LINE	SERIES	BODY	ENGINE	TRANS	TRIM	DESCRIPTION
1									PANEL, Cargo Door
	1HE20XDVAA	1	2, 3, 6, 7	L	13, 15, 17, 53, 55			*A6	Right
		1	2, 3, 6, 7	L	13, 15, 17, 53, 55			*E7	Right
		1	2, 3, 6, 7	L	13, 15, 17, 53, 55			*F7	Right
	1HE46XDVAA	1	2, 3, 6, 7	L				*A6	Left
		1	2, 3, 6, 7	L				*E7	Left
		1	2, 3, 6, 7	L				*F7	Left
2	68006483AA	6	2, 3, 6, 7	L	13, 15, 17, 53, 55				RIVET
3	68005152AA	8	2, 3, 6, 7	L	17				FASTENER
4									PANEL, Cargo Door
	1HE45XDVAA	1	2, 3, 6, 7	L				*F7	
	1HE46XDVAA	1	2, 3, 6, 7	L				*A6	
		1	2, 3, 6, 7	L				*E7	
5									CLIP, Trim
	68030141AA	1	2, 3, 6, 7	L	13, 15, 17, 53, 55			*A6	
		1	2, 3, 6, 7	L	13, 15, 17, 53, 55			*E7	
		1	2, 3, 6, 7	L	13, 15, 17, 53, 55			*F7	
6	06104117AA	5	2, 3, 6, 7	L	17				SCREW, Hex Head
7									PANEL, Cargo Door
	1HE48XDVAA	1	2, 3, 6, 7	L	13, 15, 17, 53, 55			*E7	Right
		1	2, 3, 6, 7	L	13, 15, 17, 53, 55			*F7	Right
	1HE49XDVAA	1	2, 3, 6, 7	L	13, 15, 17, 53, 55			*A6	With [CLJ], Right
		1	2, 3, 6, 7	L	13, 15, 17, 53, 55			*E7	With [CLJ], Right
		1	2, 3, 6, 7	L	13, 15, 17, 53, 55			*A6	Right
	1HF58XDVAA	1	2, 3, 6, 7	L	13, 15, 17, 53, 55			*F7	
	1HF59XDVAA	1	2, 3, 6, 7	L	13, 15, 17, 53, 55			*A6	With [CLJ]

SPRINTER (VB)

SERIES	LINE	BODY	ENGINE	TRANSMISSION
L = LOWLINE	3 = HD DODGE 2WD 2 = Med. Duty DODGE 2WD	03 = CAB CHASSIS WHEEL BASE 3 05 = CAB CHASSIS WHEEL BASE 5 13 = 119 WB 53 = 119 WB 15 = VAN WHEEL BASE 5 55 = WAGON WHEEL BASE 5 17 = VAN WHEEL BASE 7	EG2 = 3.5L V6 Gas Engine EXM = 3.0L V6 Turbo Diesel Engine	DGZ = 5-Speed Auto W5A380 Transmission

AR = use ase required - = Non illustrrated part

<< RETURN TO GROUP INDEX

Cargo Door Trim Panel
Figure IVB-430

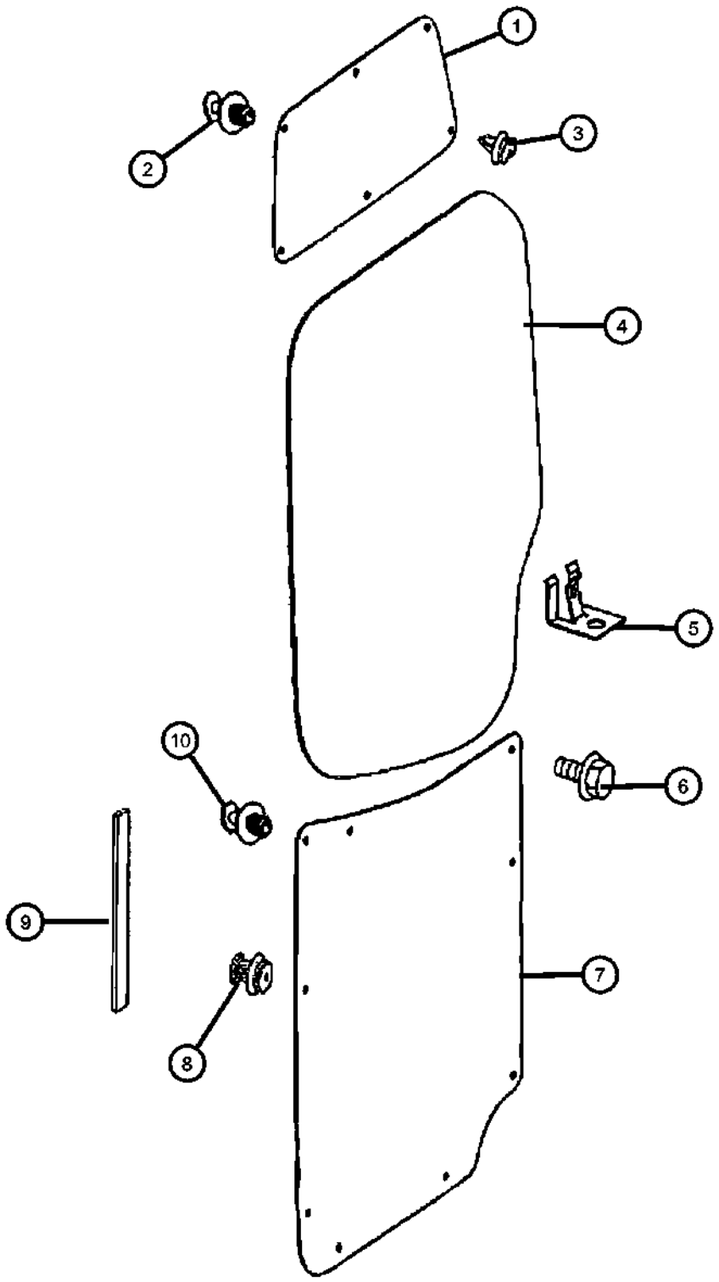

ITEM	PART NUMBER	QTY	LINE	SERIES	BODY	ENGINE	TRANS	TRIM	DESCRIPTION
		1	2, 3, 6, 7	L	13, 15, 17, 53, 55			*E7	With [CLJ]
		1	2, 3, 6, 7	L	15, 17, 53, 55, 13			*F7	With [CLJ], Left
		1	2, 3, 6, 7	L	13, 15, 17, 53, 55			*F7	With [CLJ], Right
		1	2, 3, 6, 7	L	13, 15, 17, 53, 55			*A6	
		1	2, 3, 6, 7	L	13, 15, 17, 53, 55			*E7	
8	68006484AA	28	2, 3, 6, 7	L	13, 15, 17, 53, 55				RETAINER
9	68030142AA	2	2, 3, 6, 7	L	13, 15, 17, 53, 55				PAD
10	68006483AA	6	2, 3, 6, 7	L	13, 15, 17, 53, 55				RIVET

SPRINTER (VB)

SERIES	LINE	BODY	ENGINE	TRANSMISSION
L = LOWLINE	3 = HD DODGE 2WD 2 = Med. Duty DODGE 2WD	03 = CAB CHASSIS WHEEL BASE 3 05 = CAB CHASSIS WHEEL BASE 5 13 = 119 WB 53 = 119 WB 15 = VAN WHEEL BASE 5 55 = WAGON WHEEL BASE 5 17 = VAN WHEEL BASE 7	EG2 = 3.5L V6 Gas Engine EXM = 3.0L V6 Turbo Diesel Engine	DGZ = 5-Speed Auto W5A380 Transmission

Front Seat [A6] Orion Grey Medium
Figure IVB-510

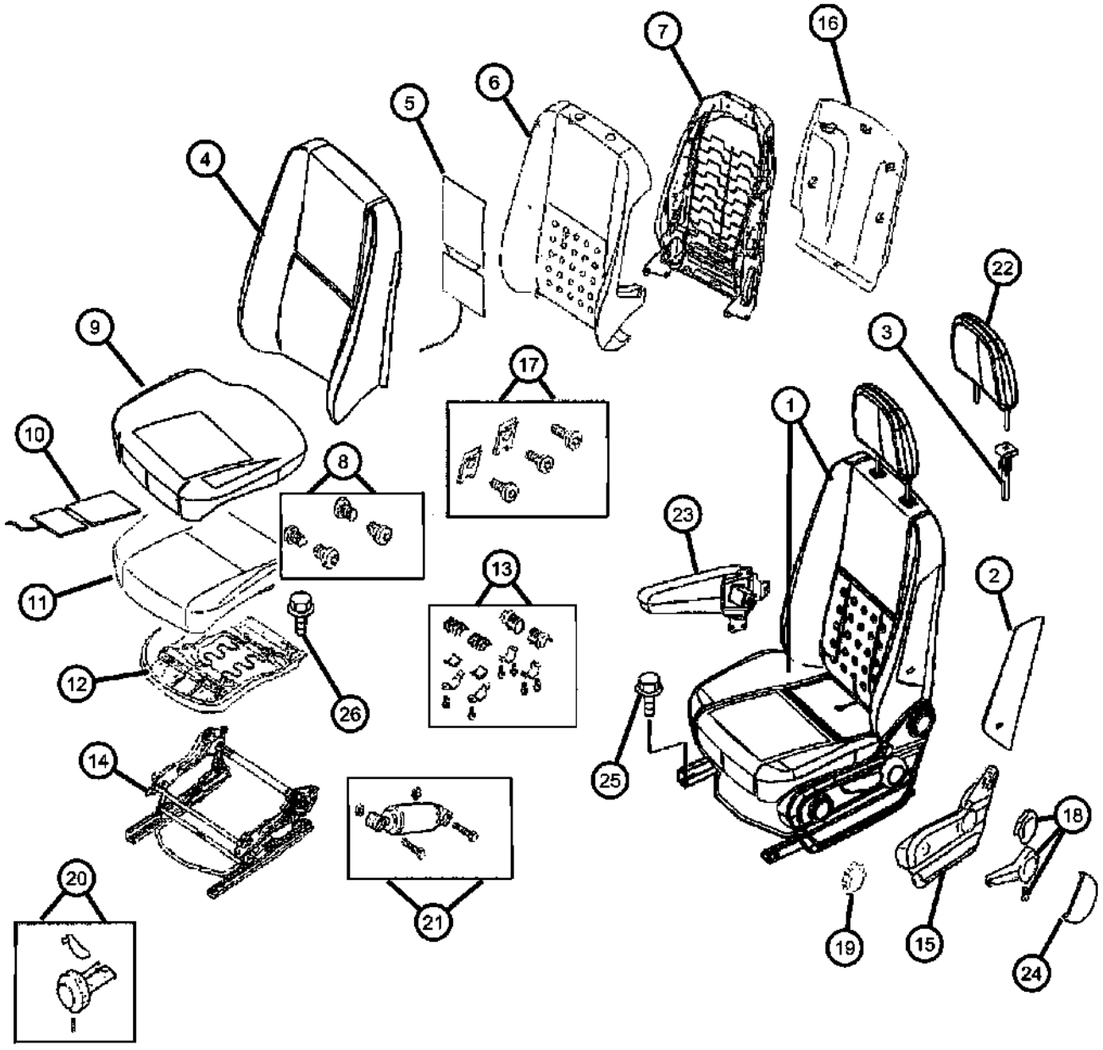

ITEM	PART NUMBER	QTY	LINE	SERIES	BODY	ENGINE	TRANS	TRIM	DESCRIPTION
Note: [CDD]=Luxury Bucket Driver Seat... [CJ9]=Side Front Air Bag [CXX]=Driver Suspension Seat [CJ1]=Supplemental Front Seat Sise Air Bag [CDY]=Luxury Bucket Passenger Seat [CXY]=Passenger Suspension Seat									
1									SEAT COMPLETE, Front
	1HG541A6AA	1	2, 3, 6, 7	L				*A6	Standard Seat, Left
	1HG581A6AA	1	2, 3, 6, 7	L				*A6	Floating Seat, With [CXX] Driver Suspension Seat, With [CJ9] Side Front Air Bag, Left
	1HG591A6AA	1	2, 3, 6, 7	L				*A6	Floating Seat, With [CXX] Driver Suspension Seat, Left
	1HG601A6AA	1	2, 3, 6, 7	L				*A6	Standard Seat, With [CJ9] Side Air Bag, Left
	1HG551A6AA	1	2, 3, 6, 7	L				*A6	Comfort Seat, With [CDD] Luxury Bucket Seat, With [CJ9] Side Front Air Bag, Left
	1HG561A6AA	1	2, 3, 6, 7	L				*A6	Comfort Seat, With [CDD] Luxury Bucket Seat, Left
	1HG711A6AA	1	2, 3, 6, 7	L				*A6	Standard Seat, Right
	1HG621A6AA	1	2, 3, 6, 7	L				*A6	Comfort Seat, With [CDY] Luxury Bucket Seat, Right
	1HG631A6AA	1	2, 3, 6, 7	L				*A6	Comfort Seat,With [CJ1] Supplemental Front Seat Side Air Bag, With [CDY] Luxury Bucket Seat, Right
	1HG641A6AA	1	2, 3, 6, 7	L				*A6	Standard Seat,With [CJ1] Supplemental Front Seat Side Air Bag,Without [CDY] Luxury Bucket Seat, Right
	1HG771A6AA	1	2, 3, 6, 7	L				*A6	Floating Seat, With [CXY] Passenger Suspension Seat, Right
2									COVER, Air Bag Module
	1HE53DX9AA	1	2, 3, 6, 7	L				*A6	Left
	1HF66DX9AA	1	2, 3, 6, 7	L				*A6	Right
3	68010824AA	2	2, 3, 6, 7	L					SLEEVE, Headrest
4									COVER, Front Seat Back
	1HG831A6AA	2	2, 3, 6, 7	L				*A6	Right & Left

SPRINTER (VB)

SERIES	LINE	BODY	ENGINE	TRANSMISSION
L = LOWLINE	3 = HD DODGE 2WD 2 = Med. Duty DODGE 2WD	03 = CAB CHASSIS WHEEL BASE 3 05 = CAB CHASSIS WHEEL BASE 5 13 = 119 WB 53 = 119 WB 15 = VAN WHEEL BASE 5 55 = WAGON WHEEL BASE 5 17 = VAN WHEEL BASE 7	EG2 = 3.5L V6 Gas Engine EXM = 3.0L V6 Turbo Diesel Engine	DGZ = 5-Speed Auto W5A380 Transmission

Front Seat [A6] Orion Grey Medium
Figure IVB-510

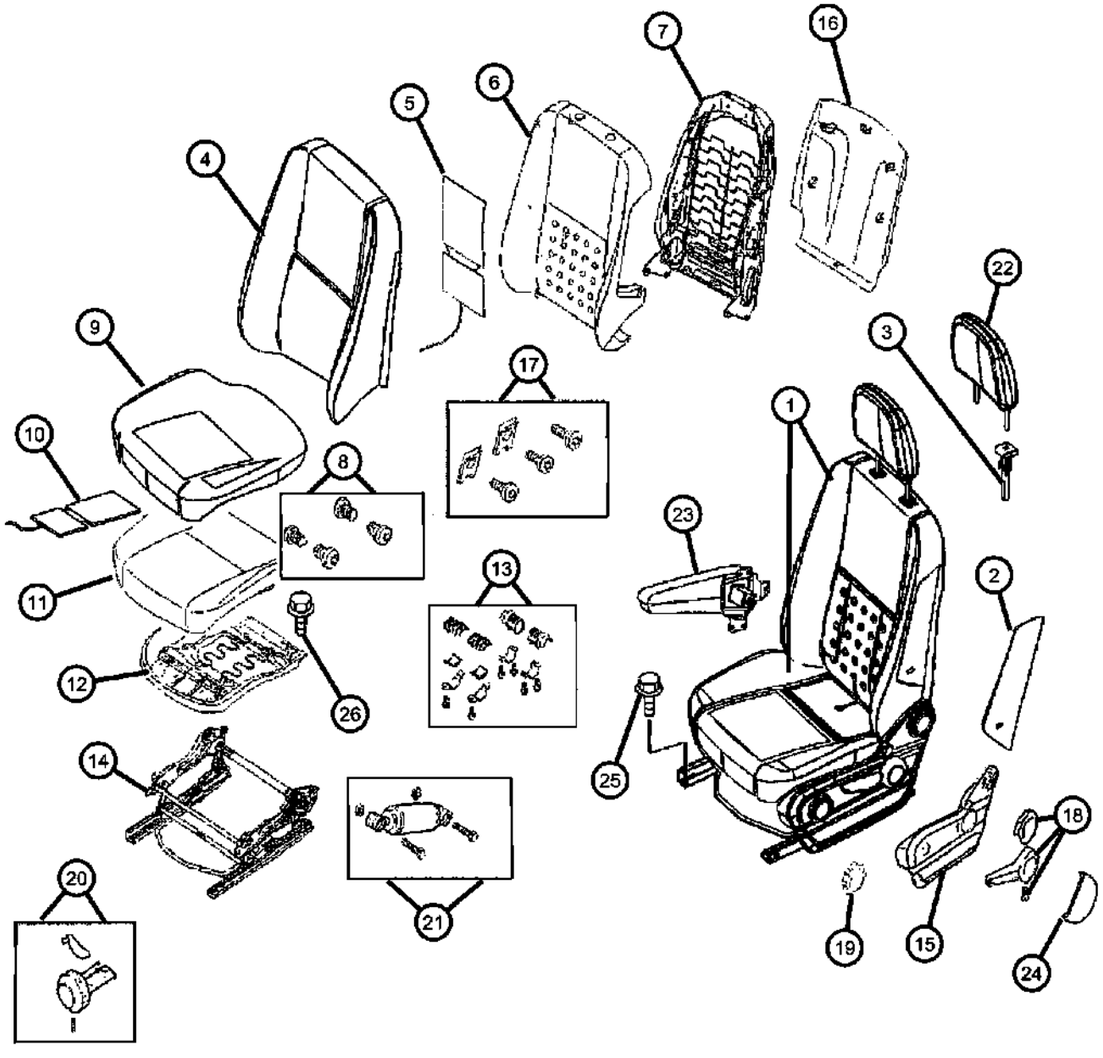

ITEM	PART NUMBER	QTY	LINE	SERIES	BODY	ENGINE	TRANS	TRIM	DESCRIPTION
	1HG881A6AA	1	2, 3, 6, 7	L				*A6	With [CJ9] Side Seat Air Bag, Left
	1HG891A6AA	1	2, 3, 6, 7	L				*A6	With [CJ9] Side Seat Air Bag, Right
5	68010845AA	2	2, 3, 6, 7	L					PAD, Heater, BackrestRight & Left
6									FOAM, Seat Back
	68010842AA	2	2, 3, 6, 7	L					Without [CJ9] Side Seat Air Bag, Left
	68010843AA	1	2, 3, 6, 7	L					With [CJ9] Side Seat Air Bag, Left
	68010924AA	1	2, 3, 6, 7	L					Right
7									FRAME, Front Seat Back
	68010844AA	1	2, 3, 6, 7	L					Left
	68010927AA	1	2, 3, 6, 7	L					Right
8	68010851AA	1	2, 3, 6, 7	L					SCREW
9	1HG901A6AA	1	2, 3, 6, 7	L				*A6	COVER, Front Seat CushionRight & Left
10	68010846AA	2	3, 6, 7, 2	L					PAD, Heater, Seat CushionRight & Left
11	68010848AA	2	2, 3, 6, 7	L					FOAM, Seat CushionRight & Left
12	68010849AA	2	2, 3, 6, 7	L					PAN, SEAT CUSHIONRight & Left
13	68010850AA	1	2, 3, 6, 7	L					BRACKET
14									ADJUSTER, Seat
	68010937AA	1	2, 3, 6, 7	L					With [CXY] Passenger Suspension Seat, Right
	68010838AA	1	2, 3, 6, 7	L					, Left
	68010854AA	1	3, 6, 7, 2	L					With [CDD] Luxury Bucket Driver Seat, Left
	68010858AA	1	2, 3, 6, 7	L					With [CXX] Driver Suspension Seat, Left
	68010930AA	1	2, 3, 6, 7	L					Right
	68010934AA	1	2, 3, 6, 7	L					With [CDY] Luxury Bucket Passenger Seat, Right
15									SHIELD, Seat Adjuster
	68010834AA	1	2, 3, 6, 7	L					Door Side, Left
	68010835AA	1	2, 3, 6, 7	L					Tunnel Side, Left
	68010852AA	1	2, 3, 6, 7	L					Door Side, With [CDD] Luxury Bucket Driver Seat, Left

SPRINTER (VB)

SERIES	LINE	BODY	ENGINE	TRANSMISSION
L = LOWLINE	3 = HD DODGE 2WD 2 = Med. Duty DODGE 2WD	03 = CAB CHASSIS WHEEL BASE 3 05 = CAB CHASSIS WHEEL BASE 5 13 = 119 WB 53 = 119 WB 15 = VAN WHEEL BASE 5 55 = WAGON WHEEL BASE 5 17 = VAN WHEEL BASE 7	EG2 = 3.5L V6 Gas Engine EXM = 3.0L V6 Turbo Diesel Engine	DGZ = 5-Speed Auto W5A380 Transmission

Front Seat [A6] Orion Grey Medium
Figure IVB-510

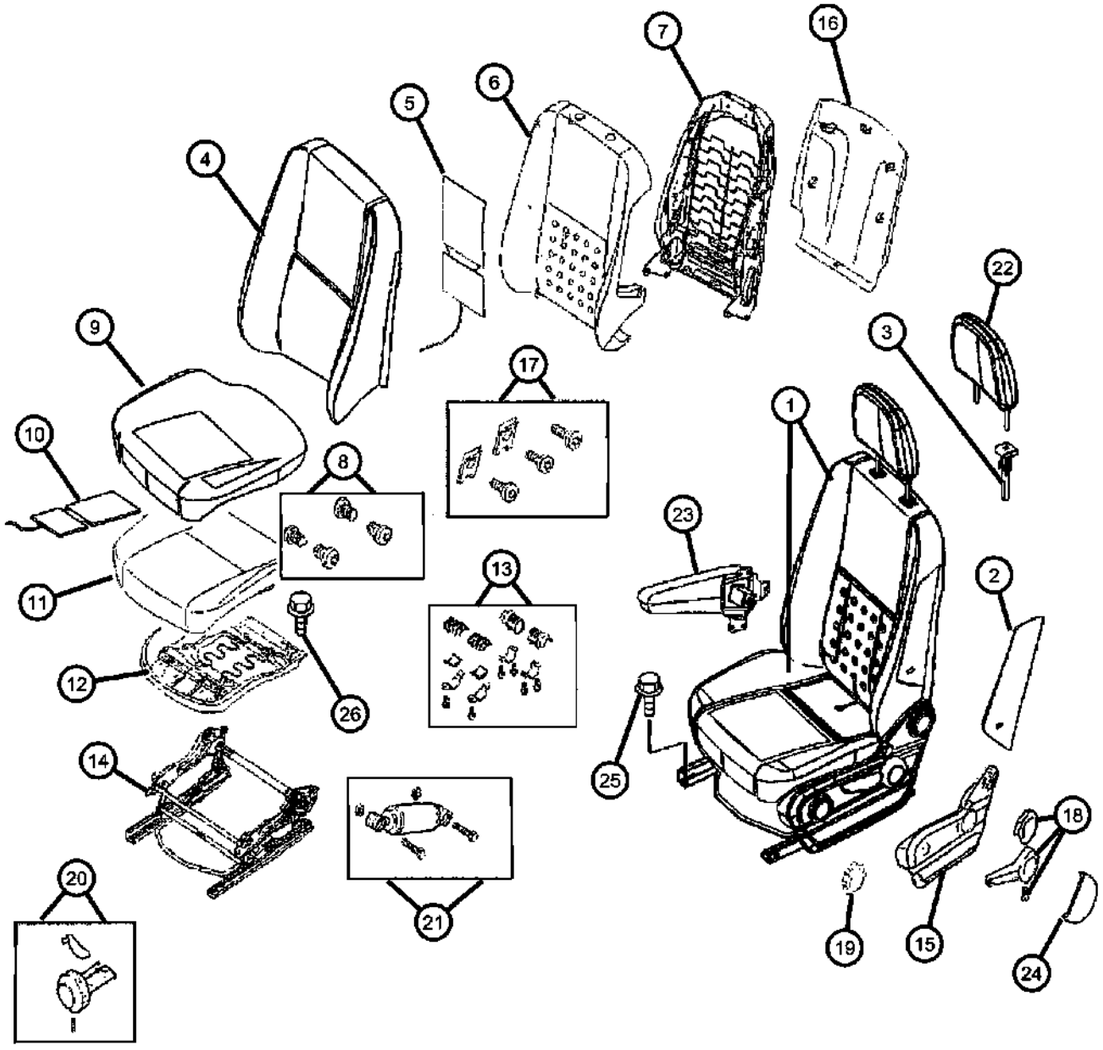

ITEM	PART NUMBER	QTY	LINE	SERIES	BODY	ENGINE	TRANS	TRIM	DESCRIPTION
	68010853AA	1	2, 3, 6, 7	L					Tunnel Side, With [CDD] Luxury Bucket Driver Seat, Left
	68010857AA	1	2, 3, 6, 7	L					Tunnel Side, With [CXX] Driver Suspension Seat, Left
	68010928AA	1	2, 3, 6, 7	L					Door Side, Right
	68010929AA	1	2, 3, 6, 7	L					Tunnel Side, Right
	68010932AA	1	2, 3, 6, 7	L					Door Side, With [CDY] Luxury Bucket Passenger Seat, Right
	68010933AA	1	2, 3, 6, 7	L					Tunnel Side, With [CDY] Luxury Bucket Passenger Seat, Right
	68010856AA	1	2, 3, 6, 7	L					Door Side, With [CXX] Driver Suspension Seat, Left
	68010935AA	1	2, 3, 6, 7	L					Door Side, With [CXY] Passenger Suspension Seat, Right
	68010936AA	1	2, 3, 6, 7	L					Tunnel Side, With [CXY] Passenger Suspension Seat, Right
16	68010836AA	2	2, 3, 6, 7	L					COVER, Seat Back, Seat Back PanelRight & Left
17									SCREW
	68010837AA	1	3, 7	L	03, 05				
		1	2, 3, 6, 7	L	13, 15, 17, 53, 55				
18									HANDLE, Seat Adjustment
	68010839AA	1	2, 3, 6, 7	L					Left
	68010931AA	1	2, 3, 6, 7	L					Right
19	68010855AA	2	2, 3, 6, 7	L					HANDLE, Seat AdjustmentRight & Left
20	68010859AA	1	2, 3, 6, 7	L					HANDLE, Hand WheelRight & Left
21	68010860AA	1	2, 3, 6, 7	L					DAMPERRight & Left
22									HEADREST
	1HE59DX9AA	3	2, 3, 6, 7	L				*A6	Right & Left
	1HE60XDVAA	3	2, 3, 6, 7	L	13, 15, 17, 53, 55			*A6	With [CDP] Driver Seat Comfort Headrest, Right & Left
23									ARMREST, Seat
	1HE54XDVAA	1	2, 3, 6, 7	L				*A6	Left
	1HE55XDVAA	1	2, 3, 6, 7	L				*A6	Right

SPRINTER (VB)

SERIES	LINE	BODY	ENGINE	TRANSMISSION
L = LOWLINE	3 = HD DODGE 2WD 2 = Med. Duty DODGE 2WD	03 = CAB CHASSIS WHEEL BASE 3 05 = CAB CHASSIS WHEEL BASE 5 13 = 119 WB 53 = 119 WB 15 = VAN WHEEL BASE 5 55 = WAGON WHEEL BASE 5 17 = VAN WHEEL BASE 7	EG2 = 3.5L V6 Gas Engine EXM = 3.0L V6 Turbo Diesel Engine	DGZ = 5-Speed Auto W5A380 Transmission

Front Seat [A6] Orion Grey Medium
Figure IVB-510

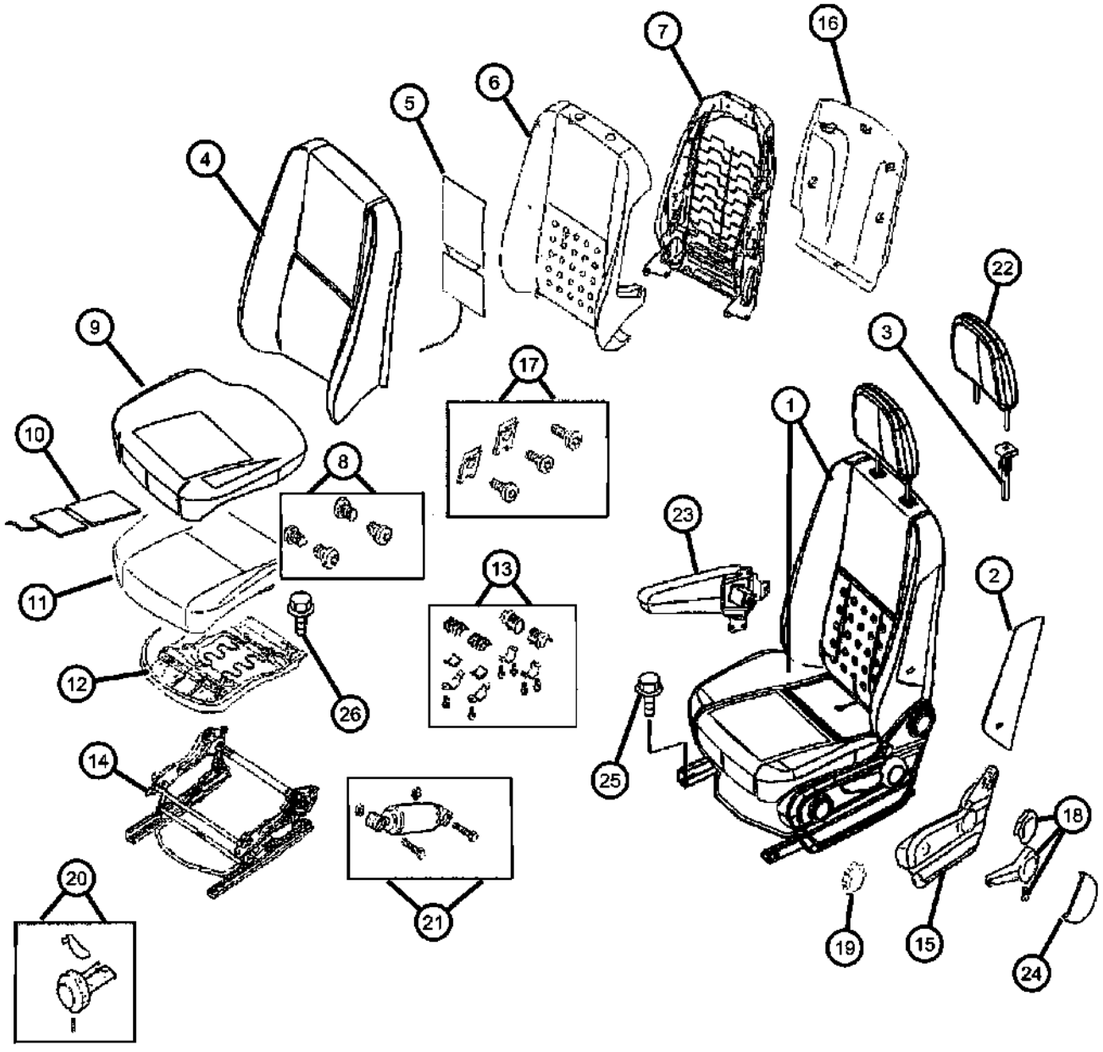

ITEM	PART NUMBER	QTY	LINE	SERIES	BODY	ENGINE	TRANS	TRIM	DESCRIPTION
24	1HE57DX9AA	1	2, 3, 6, 7	L				*A6	COVER, Seat Belt Anchor
25									BOLT, Hex Head, M10x30
	06104044AA	4	3, 7	L	03, 05				
		4	2, 3, 6, 7	L	13, 15, 17, 53, 55				
26	68010920AA	2	2, 3, 6, 7	L					SCREW

SPRINTER (VB)

SERIES	LINE	BODY	ENGINE	TRANSMISSION
L = LOWLINE	3 = HD DODGE 2WD 2 = Med. Duty DODGE 2WD	03 = CAB CHASSIS WHEEL BASE 3 05 = CAB CHASSIS WHEEL BASE 5 13 = 119 WB 53 = 119 WB 15 = VAN WHEEL BASE 5 55 = WAGON WHEEL BASE 5 17 = VAN WHEEL BASE 7	EG2 = 3.5L V6 Gas Engine EXM = 3.0L V6 Turbo Diesel Engine	DGZ = 5-Speed Auto W5A380 Transmission

AR = use ase required - = Non illustrrated part

<< RETURN TO GROUP INDEX

Front Seat [E7] Art Grey
Figure IVB-515

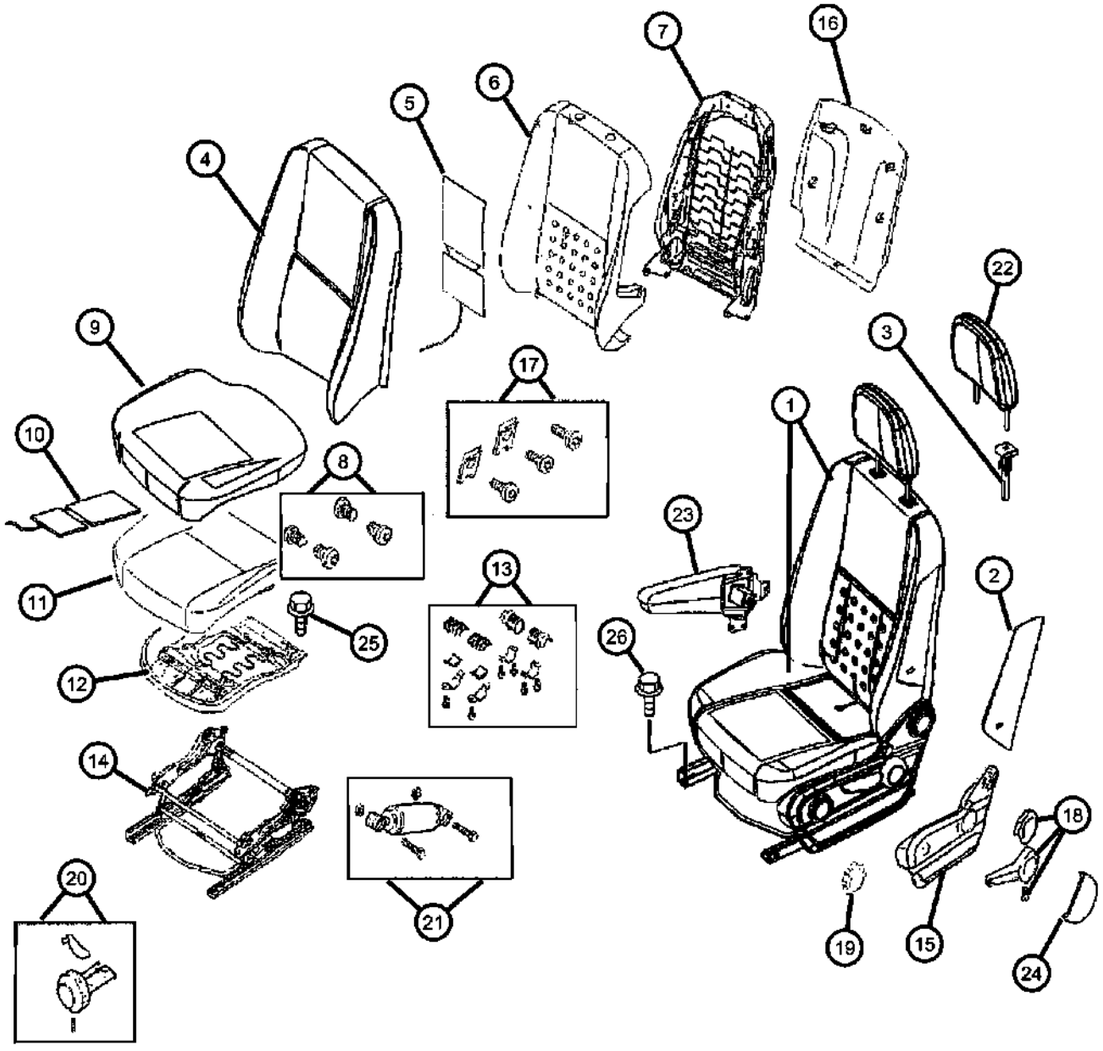

ITEM	PART NUMBER	QTY	LINE	SERIES	BODY	ENGINE	TRANS	TRIM	DESCRIPTION
Note: [CDD]=Luxury Bucket Driver Seat... [CJ9]=Side Front Air Bag [CXX]=Driver Suspension Seat [CJ1]=Supplemental Front Seat Sise Air Bag [CDY]=Luxury Bucket Passenger Seat [CXY]=Passenger Suspension Seat									
1									SEAT COMPLETE, Front
	1HG541E7AA	1	2, 3, 6, 7	L				*E7	Standard Seat, Left
	1HG581E7AA	1	2, 3, 6, 7	L				*E7	Floating Seat, With [CXX] Driver Suspension Seat, With [CJ9] Side Front Air Bag, Left
	1HG551E7AA	1	2, 3, 6, 7	L				*E7	Comfort Seat, With [CDD] Luxury Bucket Seat, With [CJ9] Side Front Air Bag, Left
	1HG561E7AA	1	2, 3, 6, 7	L				*E7	Comfort Seat, With [CDD] Luxury Bucket Seat, Left
	1HG591E7AA	1	2, 3, 6, 7	L				*E7	Floating Seat, With [CXX] Driver Suspension Seat, Left
	1HG601E7AA	1	2, 3, 6, 7	L				*E7	Standatd Seat, With [CJ9] Side Air Bag, Left
	1HG621E7AA	1	2, 3, 6, 7	L				*E7	Comfort Seat, With [CDY] Luxury Bucket Seat, Right
	1HG641E7AA	1	2, 3, 6, 7	L				*E7	Standard Seat, With [CJ1] Supplemental Front Seat Side Air Bags, Right
	1HG711E7AA	1	2, 3, 6, 7	L				*E7	Standard Seat, Right
	1HG631E7AA	1	2, 3, 6, 7	L				*E7	Comfort Seat, With [CJ1] Supplemental Front Seat Side Air Bags, With [CDY] Luxury Bucket Passenger Seat, Right
	1HG771E7AA	1	2, 3, 6, 7	L				*E7	Floating Seat, With [CXY] Passenger Suspension Seat, Right
2									COVER, Air Bag Module
	1HE53DX9AA	1	2, 3, 6, 7	L				*E7	Left
	1HF66DX9AA	1	2, 3, 6, 7	L				*E7	Right
3	68010824AA	2	2, 3, 6, 7	L					SLEEVE, Headrest
4									COVER, Front Seat Back
	1HG831E7AA	2	2, 3, 6, 7	L				*E7	Right & Left
	1HG881E7AA	1	2, 3, 6, 7	L				*E7	With [CJ9] Side Seat Air Bag, Left

SPRINTER (VB)

SERIES	LINE	BODY	ENGINE	TRANSMISSION
L = LOWLINE	3 = HD DODGE 2WD 2 = Med. Duty DODGE 2WD	03 = CAB CHASSIS WHEEL BASE 3 05 = CAB CHASSIS WHEEL BASE 5 13 = 119 WB 53 = 119 WB 15 = VAN WHEEL BASE 5 55 = WAGON WHEEL BASE 5 17 = VAN WHEEL BASE 7	EG2 = 3.5L V6 Gas Engine EXM = 3.0L V6 Turbo Diesel Engine	DGZ = 5-Speed Auto W5A380 Transmission

Front Seat [E7] Art Grey
Figure IVB-515

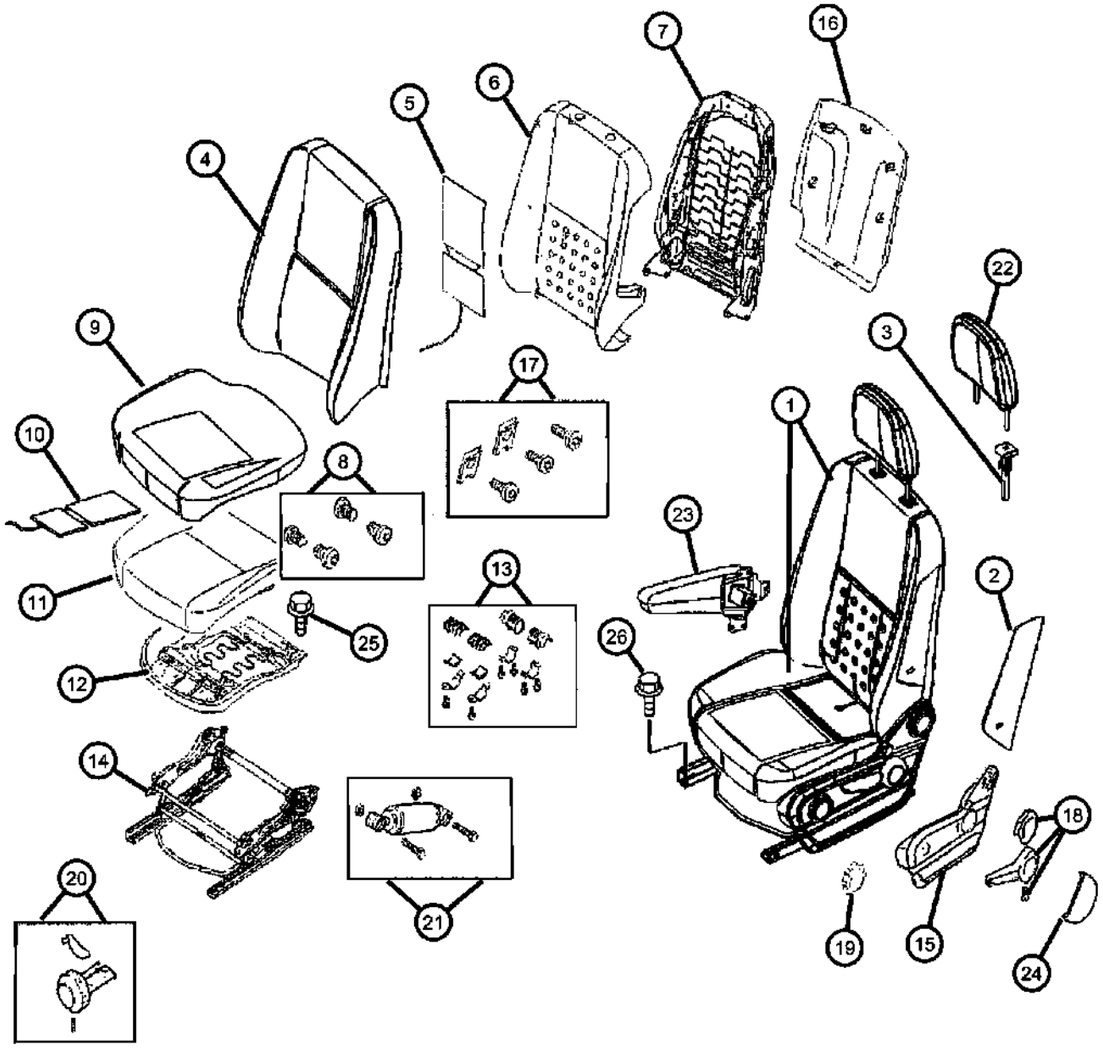

ITEM	PART NUMBER	QTY	LINE	SERIES	BODY	ENGINE	TRANS	TRIM	DESCRIPTION
	1HG891E7AA	1	2, 3, 6, 7	L				*E7	With [CJ9] Side Seat Air Bag, Right
5	68010845AA	2	2, 3, 6, 7	L					PAD, Heater, BackrestRight & Left
6									FOAM, Seat Back
	68010842AA	2	2, 3, 6, 7	L					Without [CJ9] Side Seat Air Bag, Left
	68010843AA	1	2, 3, 6, 7	L					With [CJ9] Side Seat Air Bag, Left
	68010924AA	1	2, 3, 6, 7	L					Right
7									FRAME, Front Seat Back
	68010844AA	1	2, 3, 6, 7	L					Left
	68010927AA	1	2, 3, 6, 7	L					Right
8	68010851AA	1	2, 3, 6, 7	L					SCREW
9	1HG901E7AA	1	2, 3, 6, 7	L				*E7	COVER, Front Seat CushionRight & Left
10	68010846AA	2	2, 3, 6, 7	L					PAD, Heater, Seat CushionRight & Left
11	68010848AA	2	2, 3, 6, 7	L					FOAM, Seat CushionRight & Left
12	68010849AA	2	2, 3, 6, 7	L					PAN, SEAT CUSHIONRight & Left
13	68010850AA	1	2, 3, 6, 7	L					BRACKET
14									ADJUSTER, Seat
	68010838AA	1	2, 3, 6, 7	L					Left
	68010854AA	1	2, 3, 6, 7	L					With [CDD] Luxury Bucket Driver Seat, Left
	68010858AA	1	2, 3, 6, 7	L					With [CXX] Driver Suspension Seat, Left
	68010930AA	1	2, 3, 6, 7	L					Right
	68010934AA	1	2, 3, 6, 7	L					With [CDY] Luxury Bucket Passenger Seat, Right
	68010937AA	1	2, 3, 6, 7	L					With [CXY] Passenger Suspension Seat, Right
15									SHIELD, Seat Adjuster
	68010834AA	1	2, 3, 6, 7	L					Door Side, Left
	68010835AA	1	2, 3, 6, 7	L					Tunnel Side, Left
	68010852AA	1	2, 3, 6, 7	L					Door Side, With [CDD] Luxury Bucket Driver Seat, Left
	68010853AA	1	2, 3, 6, 7	L					Tunnel Side, With [CDD] Luxury Bucket Driver Seat, Left

SPRINTER (VB)

SERIES	LINE	BODY	ENGINE	TRANSMISSION
L = LOWLINE	3 = HD DODGE 2WD 2 = Med. Duty DODGE 2WD	03 = CAB CHASSIS WHEEL BASE 3 05 = CAB CHASSIS WHEEL BASE 5 13 = 119 WB 53 = 119 WB 15 = VAN WHEEL BASE 5 55 = WAGON WHEEL BASE 5 17 = VAN WHEEL BASE 7	EG2 = 3.5L V6 Gas Engine EXM = 3.0L V6 Turbo Diesel Engine	DGZ = 5-Speed Auto W5A380 Transmission

Front Seat [E7] Art Grey
Figure IVB-515

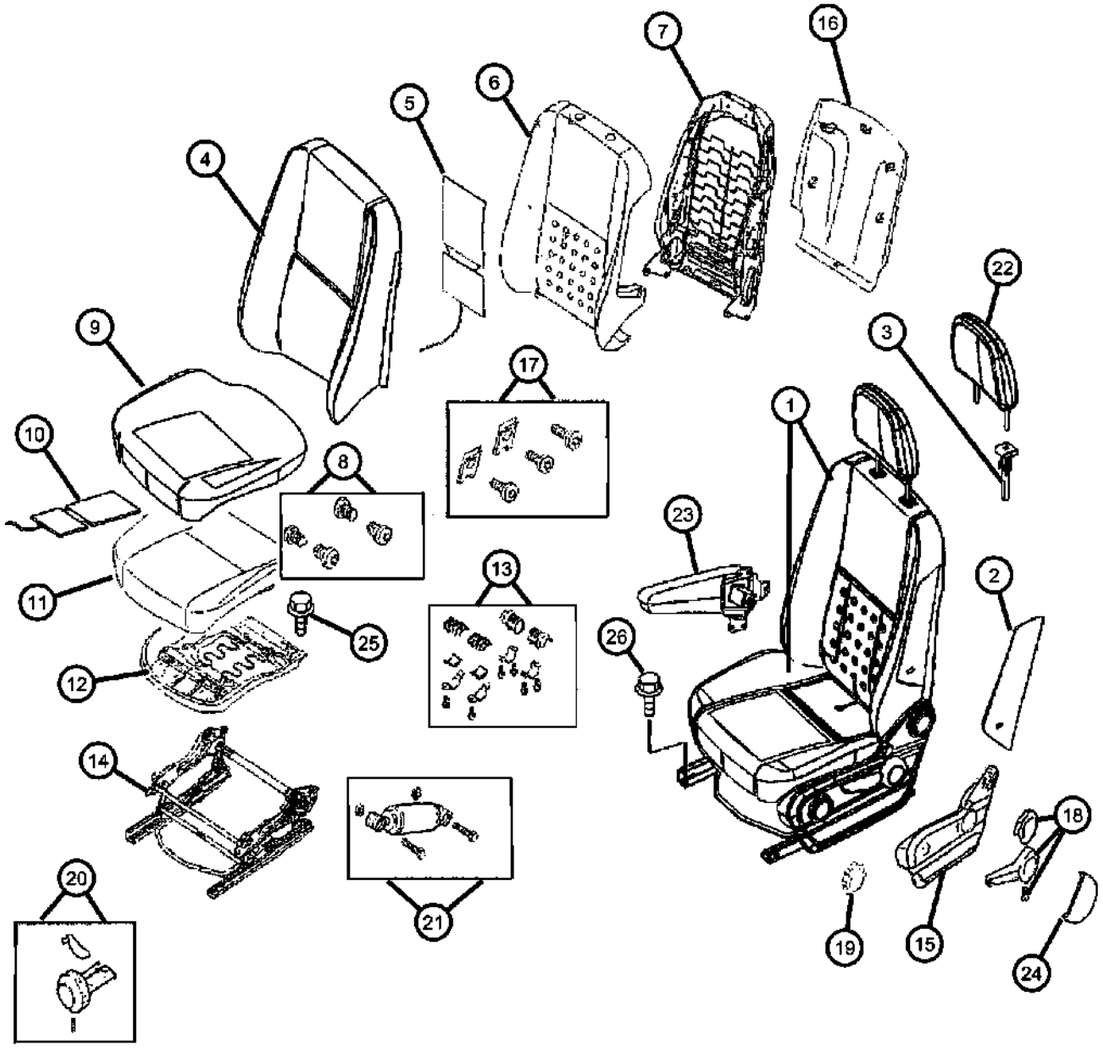

ITEM	PART NUMBER	QTY	LINE	SERIES	BODY	ENGINE	TRANS	TRIM	DESCRIPTION
	68010856AA	1	2, 3, 6, 7	L					Door Side, With [CXX] Driver Suspension Seat, Left
	68010857AA	1	2, 3, 6, 7	L					Tunnel Side, With [CXX] Driver Suspension Seat, Left
	68010928AA	1	2, 3, 6, 7	L					Door Side, Right
	68010932AA	1	2, 3, 6, 7	L					Door Side, With [CDY] Luxury Bucket Passenger Seat, Right
	68010933AA	1	2, 3, 6, 7	L					Tunnel Side, With [CDY] Luxury Bucket Passenger Seat, Right
	68010935AA	1	2, 3, 6, 7	L					Door Side, With [CXY] Passenger Suspension Seat, Right
	68010929AA	1	2, 3, 6, 7	L					Tunnel Side, Right
	68010936AA	1	2, 3, 6, 7	L					Tunnel Side, With [CXY] Passenger Suspension Seat, Right
16	68010836AA	2	2, 3, 6, 7	L					COVER, Seat Back, Seat Back PanelRight & Left
17									SCREW
	68010837AA	1	3, 7	L	03, 05				
		1	2, 3, 6, 7	L	13, 15, 17, 53, 55				
18									HANDLE, Seat Adjustment
	68010839AA	1	2, 3, 6, 7	L					Left
	68010931AA	1	2, 3, 6, 7	L					Right
19	68010855AA	2	2, 3, 6, 7	L					HANDLE, Seat AdjustmentRight & Left
20	68010859AA	1	2, 3, 6, 7	L					HANDLE, Hand WheelRight & Left
21	68010860AA	1	2, 3, 6, 7	L					DAMPERRight & Left
22									HEADREST
	1HE59DX9AA	3	2, 3, 6, 7	L				*E7	Right & Left
	1HE60XDVAA	3	2, 3, 6, 7	L	13, 15, 17, 53, 55			*E7	With [CDP] Driver Seat Comfort Headrest, Right & Left
23									ARMREST, Seat
	1HE54XDVAA	1	2, 3, 6, 7	L				*E7	Left
	1HE55XDVAA	1	2, 3, 6, 7	L				*E7	Right
24	1HE57DX9AA	1	2, 3, 6, 7	L				*E7	COVER, Seat Belt Anchor
25									BOLT, Hex Head, M10x30

SPRINTER (VB)

SERIES	LINE	BODY	ENGINE	TRANSMISSION
L = LOWLINE	3 = HD DODGE 2WD 2 = Med. Duty DODGE 2WD	03 = CAB CHASSIS WHEEL BASE 3 05 = CAB CHASSIS WHEEL BASE 5 13 = 119 WB 53 = 119 WB 15 = VAN WHEEL BASE 5 55 = WAGON WHEEL BASE 5 17 = VAN WHEEL BASE 7	EG2 = 3.5L V6 Gas Engine EXM = 3.0L V6 Turbo Diesel Engine	DGZ = 5-Speed Auto W5A380 Transmission

AR = use ase required - = Non illustrrated part

<< RETURN TO GROUP INDEX

Front Seat [E7] Art Grey
Figure IVB-515

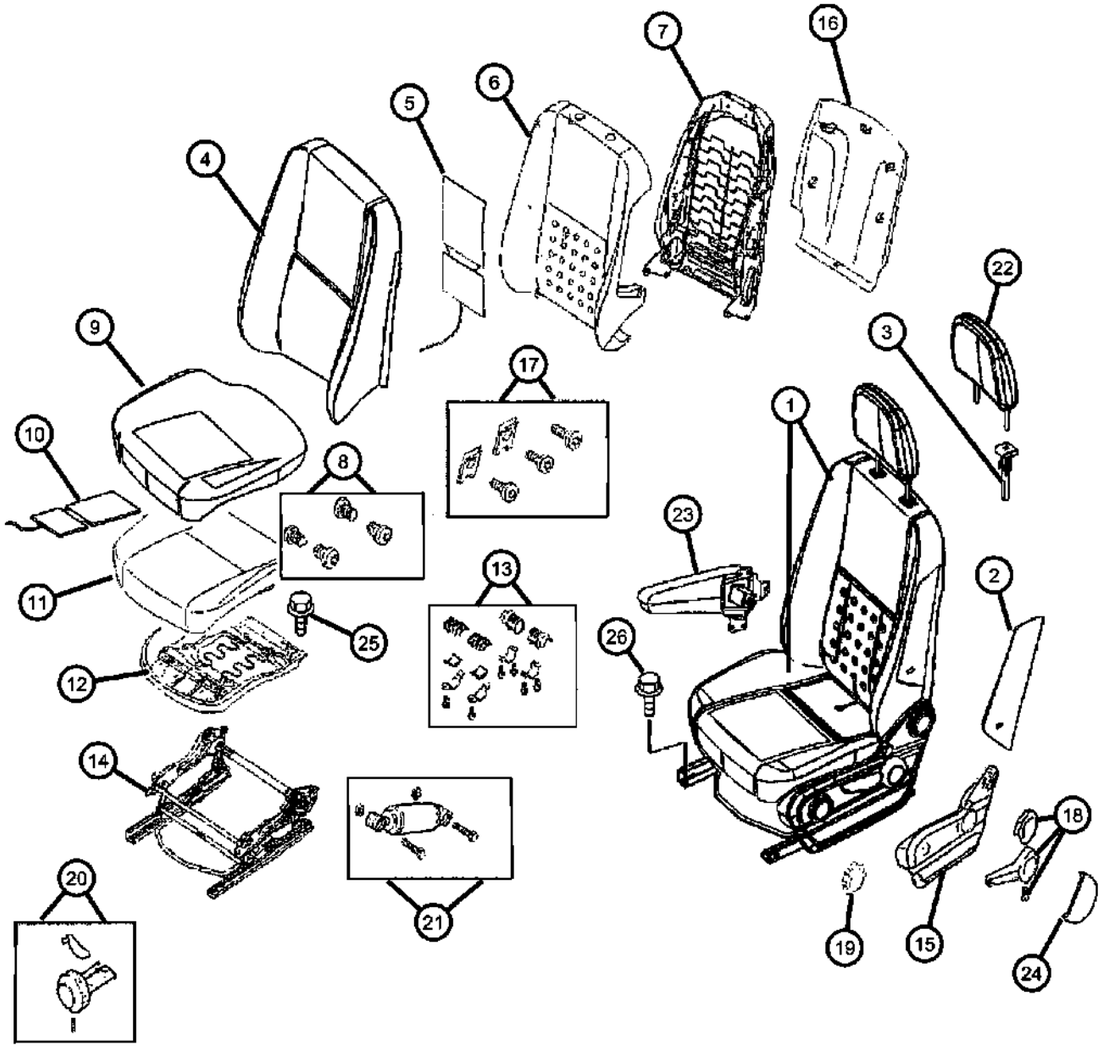

ITEM	PART NUMBER	QTY	LINE	SERIES	BODY	ENGINE	TRANS	TRIM	DESCRIPTION
	06104044AA	4	3, 7	L	03, 05				
		4	2, 3, 6, 7	L	13, 15, 17, 53, 55				
26	68010920AA	2	2, 3, 6, 7	L					SCREW

SPRINTER (VB)

SERIES	LINE	BODY	ENGINE	TRANSMISSION
L = LOWLINE	3 = HD DODGE 2WD 2 = Med. Duty DODGE 2WD	03 = CAB CHASSIS WHEEL BASE 3 05 = CAB CHASSIS WHEEL BASE 5 13 = 119 WB 53 = 119 WB 15 = VAN WHEEL BASE 5 55 = WAGON WHEEL BASE 5 17 = VAN WHEEL BASE 7	EG2 = 3.5L V6 Gas Engine EXM = 3.0L V6 Turbo Diesel Engine	DGZ = 5-Speed Auto W5A380 Transmission

AR = use ase required - = Non illustrrated part

<< RETURN TO GROUP INDEX

Front Seat [F7] Black
Figure IVB-520

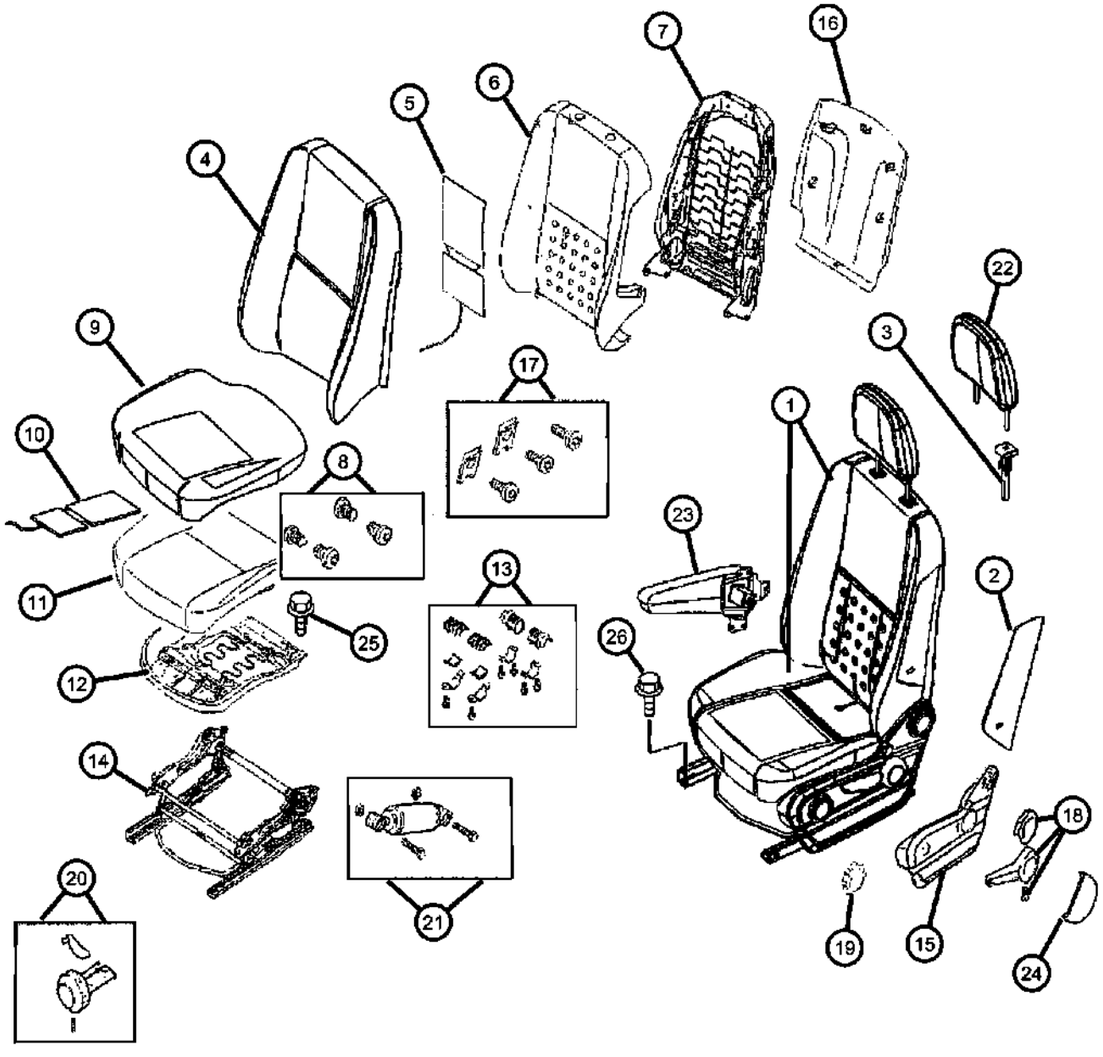

ITEM	PART NUMBER	QTY	LINE	SERIES	BODY	ENGINE	TRANS	TRIM	DESCRIPTION
Note: [CDD]=Luxury Bucket Driver Seat... [CJ9]=Side Front Air Bag [CXX]=Driver Suspension Seat [CJ1]=Supplemental Front Seat Sise Air Bag [CDY]=Luxury Bucket Passenger Seat [CXY]=Passenger Suspension Seat									
1									SEAT COMPLETE, Front
	1HG541F7AA	1	2, 3, 6, 7	L				*F7	Standard Seat, Left
	1HG551F7AA	1	2, 3, 6, 7	L				*F7	Comfort Seat, With [CDD] Luxury Bucket Seat, With [CJ9] Side Front Air Bag, Left
	1HG561F7AA	1	2, 3, 6, 7	L				*F7	Comfort Seat, With [CDD] Luxury Bucket Seat, Left
	1HG581F7AA	1	2, 3, 6, 7	L				*F7	Floating Seat, With [CXX] Driver Suspension Seat, With [CJ9] Side Front Air Bag, Left
	1HG591F7AA	1	2, 3, 6, 7	L				*F7	Floating Seat, With [CXX] Driver Suspension Seat, Left
	1HG601F7AA	1	2, 3, 6, 7	L				*F7	Standard Seat, With [CJ9] Side Air Bag, Left
	1HG621F7AA	1	2, 3, 6, 7	L				*F7	Comfort Seat, With [CDY] Luxury Bucket Seat, Right
	1HG631F7AA	1	2, 3, 6, 7	L				*F7	Comfort Seat, With [CJ1] Supplemental Front Seat Side Air Bag, With [CDY] Luxury Bucket Passenger Seat, Right
	1HG641F7AA	1	2, 3, 6, 7	L				*F7	Standard Seat, With [CJ1] Supplemental Front Seat Side Air Bag, Right
	1HG711F7AA	1	2, 3, 6, 7	L				*F7	Standard Seat, Right
	1HG771F7AA	1	2, 3, 6, 7	L				*F7	Floating Seat, With [CXY] Passenger Suspension Seat, Right
2									COVER, Air Bag Module
	1HE53DX9AA	1	2, 3, 6, 7	L				*F7	Left
	1HF66DX9AA	1	2, 3, 6, 7	L				*F7	Right
3	68010824AA	2	2, 3, 6, 7	L					SLEEVE, Headrest
4									COVER, Front Seat Back
	1HG881F7AA	1	2, 3, 6, 7	L				*F7	With [CJ9] Side Seat Air Bag, Left
	1HG831F7AA	2	2, 3, 6, 7	L				*F7	, Right & Left

SPRINTER (VB)

SERIES	LINE	BODY	ENGINE	TRANSMISSION
L = LOWLINE	3 = HD DODGE 2WD 2 = Med. Duty DODGE 2WD	03 = CAB CHASSIS WHEEL BASE 3 05 = CAB CHASSIS WHEEL BASE 5 13 = 119 WB 53 = 119 WB 15 = VAN WHEEL BASE 5 55 = WAGON WHEEL BASE 5 17 = VAN WHEEL BASE 7	EG2 = 3.5L V6 Gas Engine EXM = 3.0L V6 Turbo Diesel Engine	DGZ = 5-Speed Auto W5A380 Transmission

Front Seat [F7] Black
Figure IVB-520

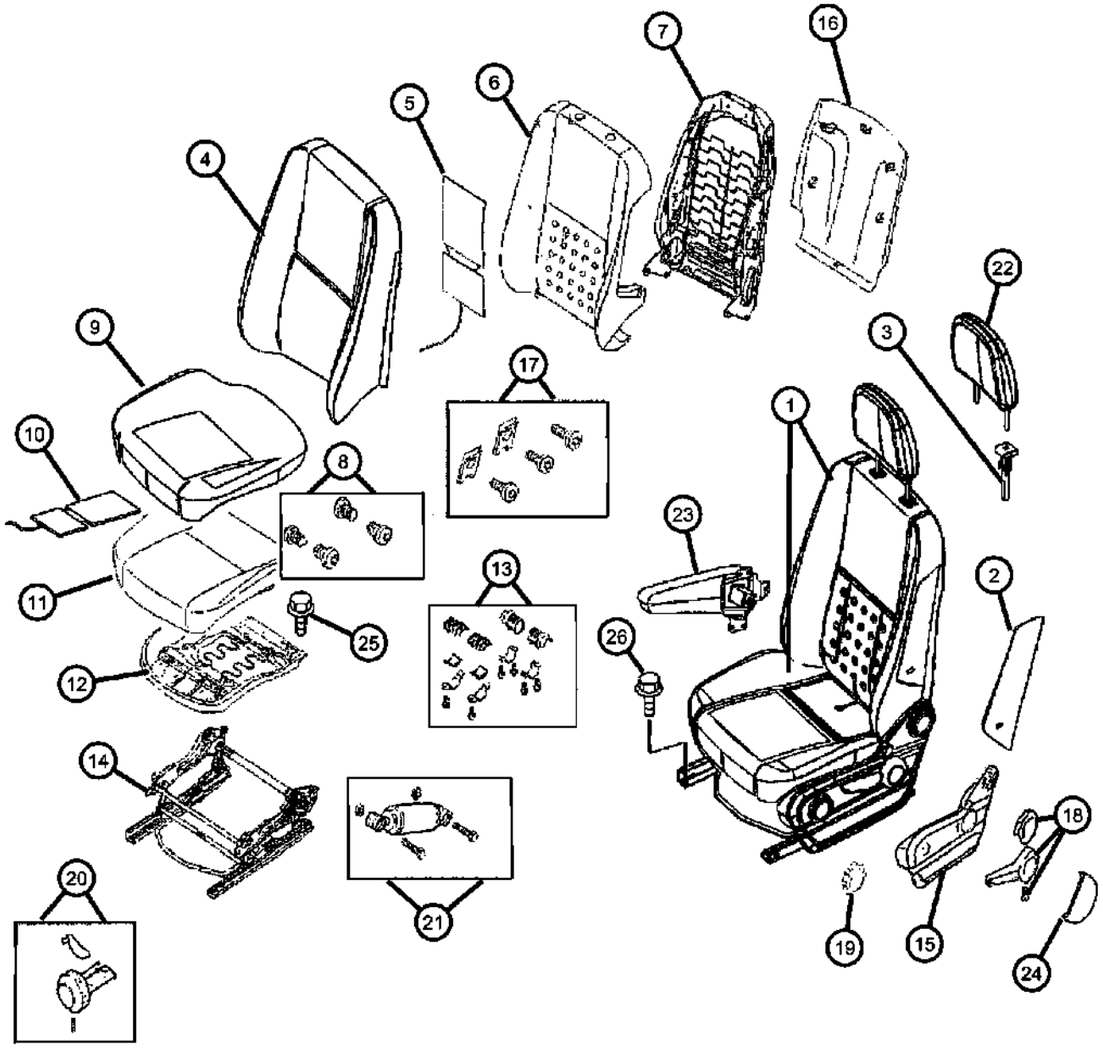

ITEM	PART NUMBER	QTY	LINE	SERIES	BODY	ENGINE	TRANS	TRIM	DESCRIPTION
	1HG891F7AA	1	2, 3, 6, 7	L				*F7	With [CJ9] Side Seat Air Bag, Right
5	68010845AA	2	2, 3, 6, 7	L					PAD, Heater, BackrestRight & Left
6									FOAM, Seat Back
	68010842AA	2	2, 3, 6, 7	L					Without [CJ9] Side Seat Air Bag, Left
	68010843AA	1	2, 3, 6, 7	L					With [CJ9] Side Seat Air Bag, Left
	68010924AA	1	2, 3, 6, 7	L					Right
7									FRAME, Front Seat Back
	68010844AA	1	2, 3, 6, 7	L					Left
	68010927AA	1	2, 3, 6, 7	L					Right
8	68010851AA	1	2, 3, 6, 7	L					SCREW
9	1HG901F7AA	1	2, 3, 6, 7	L				*F7	COVER, Front Seat CushionRight & Left
10	68010846AA	2	2, 3, 6, 7	L					PAD, Heater, Seat CushionRight & Left
11	68010848AA	2	2, 3, 6, 7	L					FOAM, Seat CushionRight & Left
12	68010849AA	2	2, 3, 6, 7	L					PAN, SEAT CUSHIONRight & Left
13	68010850AA	1	2, 3, 6, 7	L					BRACKET
14									ADJUSTER, Seat
	68010838AA	1	2, 3, 6, 7	L					Left
	68010854AA	1	2, 3, 6, 7	L					With [CDD] Luxury Bucket Driver Seat, Left
	68010858AA	1	2, 3, 6, 7	L					With [CXX] Driver Suspension Seat, Left
	68010930AA	1	2, 3, 6, 7	L					Right
	68010934AA	1	2, 3, 6, 7	L					With [CDY] Luxury Bucket Passenger Seat, Right
	68010937AA	1	2, 3, 6, 7	L					With [CXY] Passenger Suspension Seat, Right
15									SHIELD, Seat Adjuster
	68010834AA	1	2, 3, 6, 7	L					Door Side, Left
	68010835AA	1	2, 3, 6, 7	L					Tunnel Side, Left
	68010933AA	1	2, 3, 6, 7	L					Tunnel Side, With [CDY] Luxury Bucket Passenger Seat, Right
	68010852AA	1	2, 3, 6, 7	L					Door Side, With [CDD] Luxury Bucket Driver Seat, Left

SPRINTER (VB)

SERIES	LINE	BODY	ENGINE	TRANSMISSION
L = LOWLINE	3 = HD DODGE 2WD 2 = Med. Duty DODGE 2WD	03 = CAB CHASSIS WHEEL BASE 3 05 = CAB CHASSIS WHEEL BASE 5 13 = 119 WB 53 = 119 WB 15 = VAN WHEEL BASE 5 55 = WAGON WHEEL BASE 5 17 = VAN WHEEL BASE 7	EG2 = 3.5L V6 Gas Engine EXM = 3.0L V6 Turbo Diesel Engine	DGZ = 5-Speed Auto W5A380 Transmission

Front Seat [F7] Black
Figure IVB-520

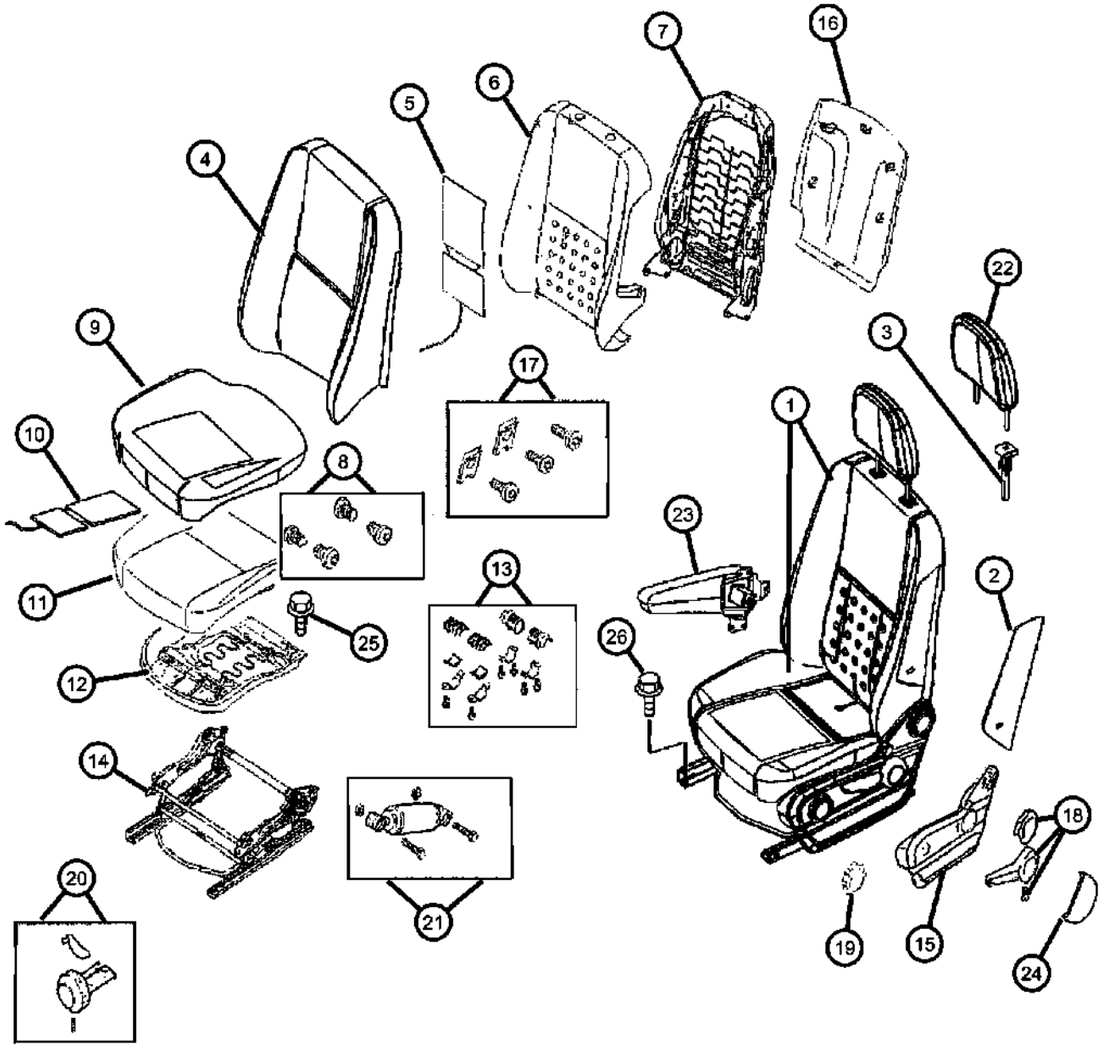

ITEM	PART NUMBER	QTY	LINE	SERIES	BODY	ENGINE	TRANS	TRIM	DESCRIPTION
	68010853AA	1	2, 3, 6, 7	L					Tunnel Side, With [CDD] Luxury Bucket Driver Seat, Left
	68010856AA	1	2, 3, 6, 7	L					Door Side, With [CXX] Driver Suspension Seat, Left
	68010857AA	1	2, 3, 6, 7	L					Tunnel Side, With [CXX] Driver Suspension Seat, Left
	68010928AA	1	2, 3, 6, 7	L					Door Side, Right
	68010929AA	1	2, 3, 6, 7	L					Tunnel Side, Right
	68010932AA	1	2, 3, 6, 7	L					Door Side, With [CDY] Luxury Bucket Passenger Seat, Right
	68010935AA	1	2, 3, 6, 7	L					Door Side, With [CXY] Passenger Suspension Seat, Right
	68010936AA	1	2, 3, 6, 7	L					Tunnel Side, With [CXY] Passenger Suspension Seat, Right
16	68010836AA	2	2, 3, 6, 7	L					COVER, Seat Back, Seat Back PanelRight & Left
17									SCREW
	68010837AA	1	3, 7	L	03, 05				
		1	2, 3, 6, 7	L	13, 15, 17, 53, 55				
18									HANDLE, Seat Adjustment
	68010839AA	1	2, 3, 6, 7	L					Left
	68010931AA	1	2, 3, 6, 7	L					Right
19	68010855AA	2	2, 3, 6, 7	L					HANDLE, Seat AdjustmentRight & Left
20	68010859AA	1	2, 3, 6, 7	L					HANDLE, Hand WheelRight & Left
21	68010860AA	1	2, 3, 6, 7	L					DAMPERRight & Left
22									HEADREST
	1HE59DX9AA	2	2, 3, 6, 7	L				*F7	Right & Left
	1HE60XDVAA	3	2, 3, 6, 7	L	13, 15, 17, 53, 55			*F7	With [CDP] Driver Seat Comfort Headrest, Right & Left
23									ARMREST, Seat
	1HE54XDVAA	1	2, 3, 6, 7	L				*F7	Left
	1HE55XDVAA	1	2, 3, 6, 7	L				*F7	Right
24	1HE57DX9AA	1	2, 3, 6, 7	L				*F7	COVER, Seat Belt Anchor
25									BOLT, Hex Head, M10x30

SPRINTER (VB)

SERIES	LINE	BODY	ENGINE	TRANSMISSION
L = LOWLINE	3 = HD DODGE 2WD 2 = Med. Duty DODGE 2WD	03 = CAB CHASSIS WHEEL BASE 3 05 = CAB CHASSIS WHEEL BASE 5 13 = 119 WB 53 = 119 WB 15 = VAN WHEEL BASE 5 55 = WAGON WHEEL BASE 5 17 = VAN WHEEL BASE 7	EG2 = 3.5L V6 Gas Engine EXM = 3.0L V6 Turbo Diesel Engine	DGZ = 5-Speed Auto W5A380 Transmission

Front Seat [F7] Black
Figure IVB-520

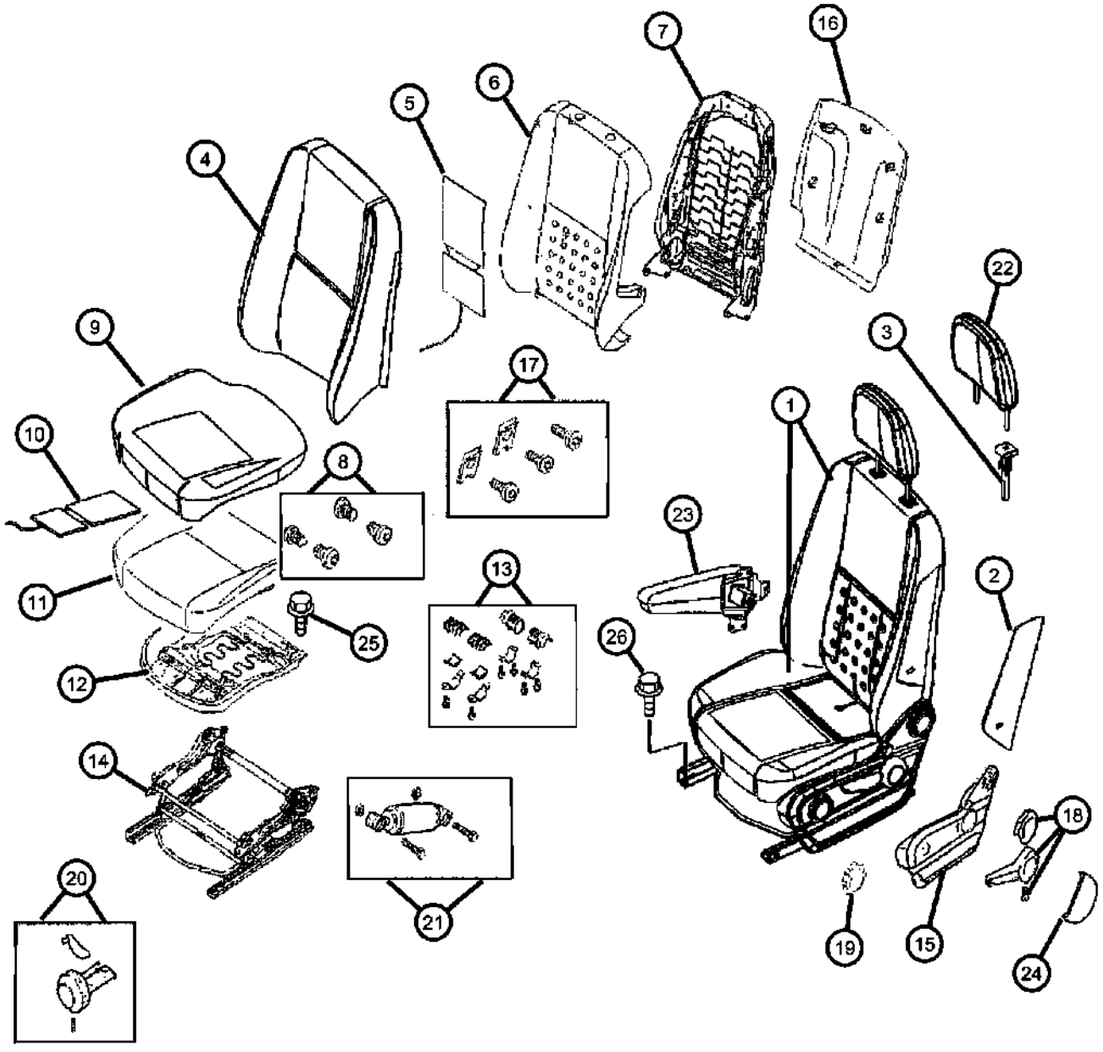

ITEM	PART NUMBER	QTY	LINE	SERIES	BODY	ENGINE	TRANS	TRIM	DESCRIPTION
	06104044AA	4	3, 7	L	03, 05				
		4	2, 3, 6, 7	L	13, 15, 17, 53, 55				
26	68010920AA	2	2, 3, 6, 7	L					SCREW

SPRINTER (VB)

SERIES	LINE	BODY	ENGINE	TRANSMISSION
L = LOWLINE	3 = HD DODGE 2WD 2 = Med. Duty DODGE 2WD	03 = CAB CHASSIS WHEEL BASE 3 05 = CAB CHASSIS WHEEL BASE 5 13 = 119 WB 53 = 119 WB 15 = VAN WHEEL BASE 5 55 = WAGON WHEEL BASE 5 17 = VAN WHEEL BASE 7	EG2 = 3.5L V6 Gas Engine EXM = 3.0L V6 Turbo Diesel Engine	DGZ = 5-Speed Auto W5A380 Transmission

AR = use ase required - = Non illustrrated part

<< RETURN TO GROUP INDEX

Passenger Front Dual Seat Sales Code [CW9], [A6] Orion Grey Medium
Figure IVB-525

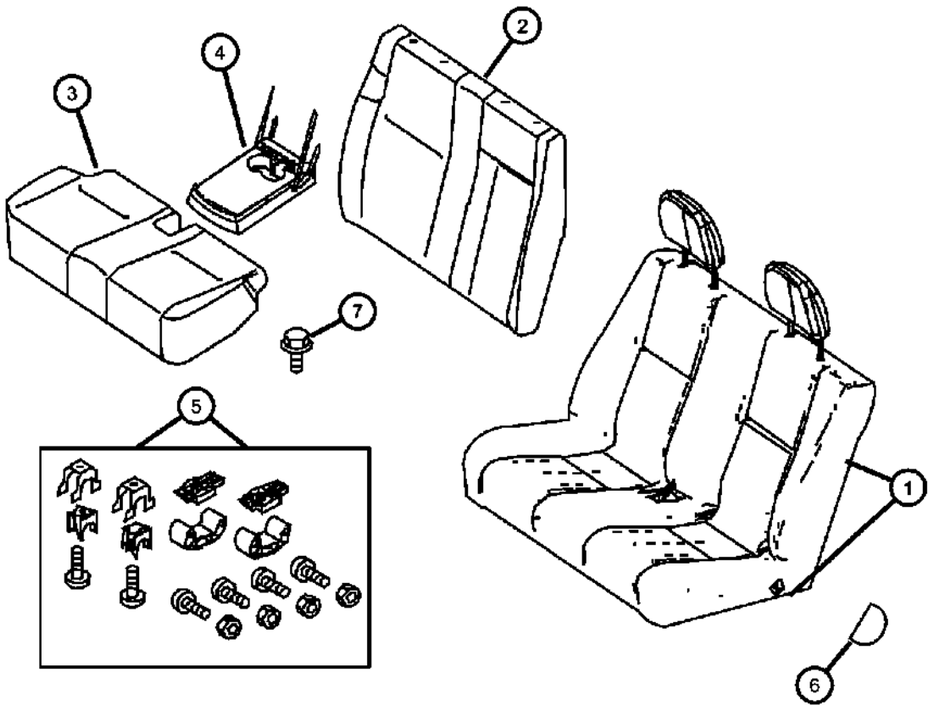

ITEM	PART NUMBER	QTY	LINE	SERIES	BODY	ENGINE	TRANS	TRIM	DESCRIPTION
1	1HH011A6AA	1	2, 3, 6, 7	L	03, 05, 13, 15, 17			*A6	SEAT COMPLETE, Front
2	1HG911A6AA	1	2, 3, 6, 7	L	03, 05, 13, 15, 17			*A6	BACK, Front Seat
3	1HG921A6AA	1	2, 3, 6, 7	L	03, 05, 13, 15, 17			*A6	COVER, Front Seat Cushion
4	1HQ491A6AA	1	2, 3, 6, 7	L	03, 05, 13, 15, 17			*A6	ARMREST, Seat
5	68010941AA	1	2, 3, 6, 7	L	03, 05, 13, 15, 17				BRACKET, Seat
6	1HE57DX9AA	1	2, 3, 6, 7	L				*A6	COVER, Seat Belt Anchor
7	68010921AA	2	2, 3, 6, 7	L	03, 05, 13, 15, 17				SCREW

SPRINTER (VB)

SERIES	LINE	BODY	ENGINE	TRANSMISSION
L = LOWLINE	3 = HD DODGE 2WD 2 = Med. Duty DODGE 2WD	03 = CAB CHASSIS WHEEL BASE 3 05 = CAB CHASSIS WHEEL BASE 5 13 = 119 WB 53 = 119 WB 15 = VAN WHEEL BASE 5 55 = WAGON WHEEL BASE 5 17 = VAN WHEEL BASE 7	EG2 = 3.5L V6 Gas Engine EXM = 3.0L V6 Turbo Diesel Engine	DGZ = 5-Speed Auto W5A380 Transmission

Passenger Front Dual Seat Sales Code [CW9], [E7] Art Grey
Figure IVB-530

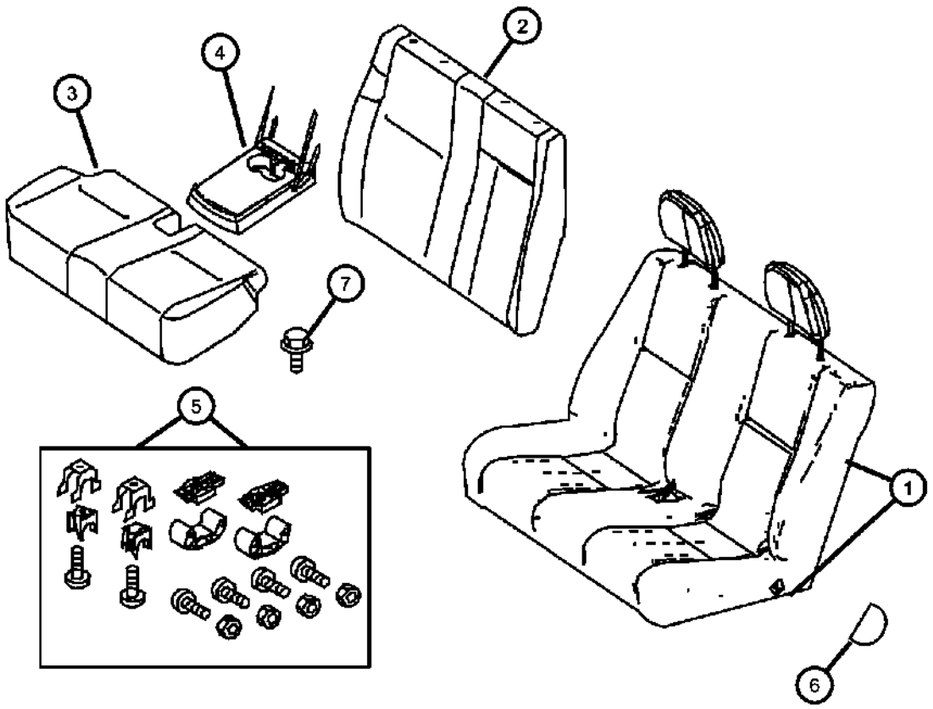

ITEM	PART NUMBER	QTY	LINE	SERIES	BODY	ENGINE	TRANS	TRIM	DESCRIPTION
1	1HH011E7AA	1	2, 3, 6, 7	L	03, 05, 13, 15, 17			*E7	SEAT COMPLETE, Front
2	1HG911E7AA	1	2, 3, 6, 7	L	03, 05, 13, 15, 17			*E7	BACK, Front Seat
3	1HG921E7AA	1	2, 3, 6, 7	L	03, 05, 13, 15, 17			*E7	COVER, Front Seat Cushion
4	1HQ491E7AA	1	2, 3, 6, 7	L	03, 05, 13, 15, 17			*E7	ARMREST, Seat
5	68010941AA	1	2, 3, 6, 7	L	03, 05, 13, 15, 17				BRACKET, Seat
6	1HE57DX9AA	1	2, 3, 6, 7	L				*E7	COVER, Seat Belt Anchor
7	68010921AA	2	2, 3, 6, 7	L	03, 05, 13, 15, 17				SCREW

SPRINTER (VB)

SERIES	LINE	BODY	ENGINE	TRANSMISSION
L = LOWLINE	3 = HD DODGE 2WD 2 = Med. Duty DODGE 2WD	03 = CAB CHASSIS WHEEL BASE 3 05 = CAB CHASSIS WHEEL BASE 5 13 = 119 WB 53 = 119 WB 15 = VAN WHEEL BASE 5 55 = WAGON WHEEL BASE 5 17 = VAN WHEEL BASE 7	EG2 = 3.5L V6 Gas Engine EXM = 3.0L V6 Turbo Diesel Engine	DGZ = 5-Speed Auto W5A380 Transmission

Passenger Front Dual Seat Sales Code [CW9], [F7] Black
Figure IVB-535

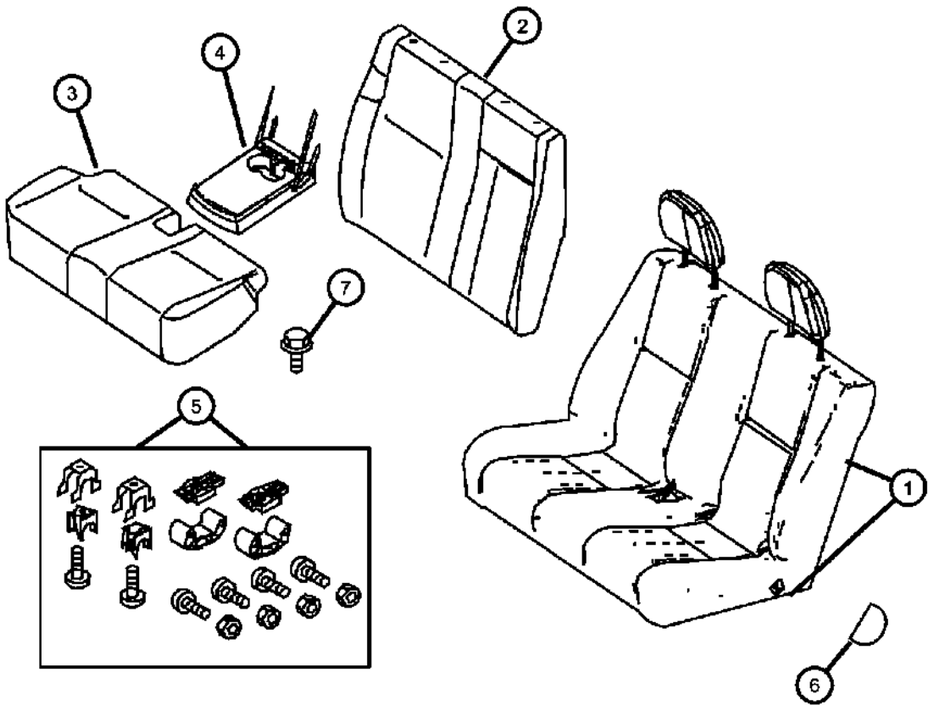

ITEM	PART NUMBER	QTY	LINE	SERIES	BODY	ENGINE	TRANS	TRIM	DESCRIPTION
1	1HH011F7AA	1	2, 3, 6, 7	L	03, 05, 13, 15, 17			*F7	SEAT COMPLETE, Front
2	1HG911F7AA	1	2, 3, 6, 7	L	03, 05, 13, 15, 17			*F7	BACK, Front Seat
3	1HG921F7AA	1	2, 3, 6, 7	L	03, 05, 13, 15, 17			*F7	COVER, Front Seat Cushion
4	1HQ491F7AA	1	2, 3, 6, 7	L	03, 05, 13, 15, 17			*F7	ARMREST, Seat
5	68010941AA	1	2, 3, 6, 7	L	03, 05, 13, 15, 17				BRACKET, Seat
6	1HE57DX9AA	1	2, 3, 6, 7	L				*F7	COVER, Seat Belt Anchor
7	68010921AA	2	2, 3, 6, 7	L	03, 05, 13, 15, 17				SCREW

SPRINTER (VB)

SERIES	LINE	BODY	ENGINE	TRANSMISSION
L = LOWLINE	3 = HD DODGE 2WD 2 = Med. Duty DODGE 2WD	03 = CAB CHASSIS WHEEL BASE 3 05 = CAB CHASSIS WHEEL BASE 5 13 = 119 WB 53 = 119 WB 15 = VAN WHEEL BASE 5 55 = WAGON WHEEL BASE 5 17 = VAN WHEEL BASE 7	EG2 = 3.5L V6 Gas Engine EXM = 3.0L V6 Turbo Diesel Engine	DGZ = 5-Speed Auto W5A380 Transmission

Passenger Front Jump Seat With Sales Code [CDT], [A6] Orion Grey Medium
Figure IVB-540

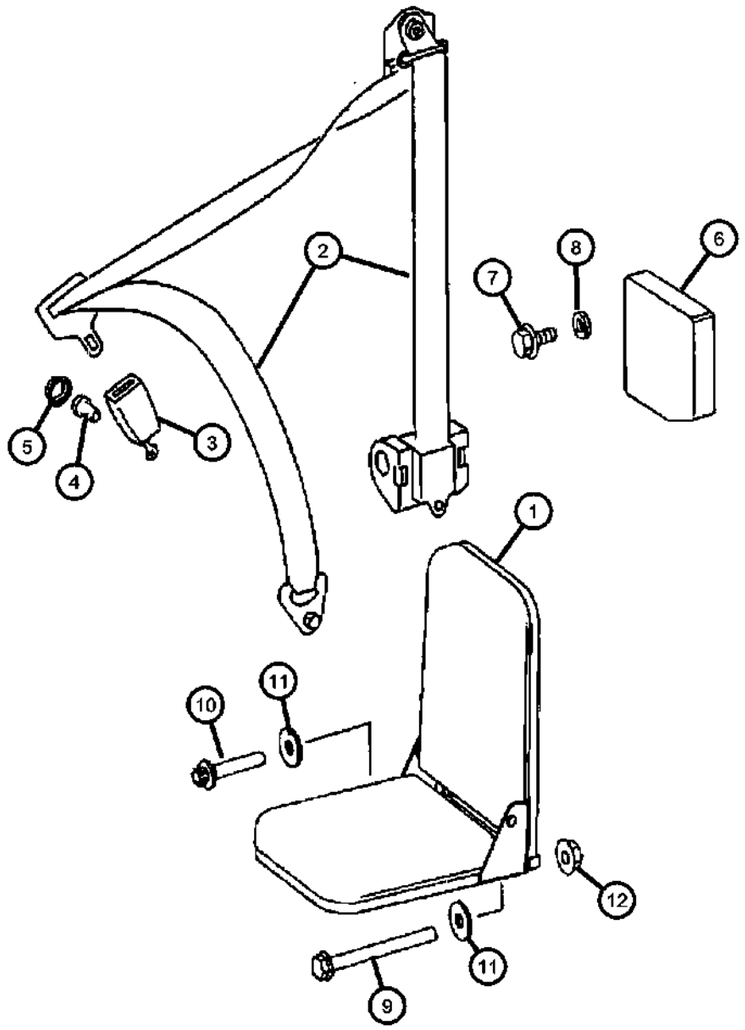

ITEM	PART NUMBER	QTY	LINE	SERIES	BODY	ENGINE	TRANS	TRIM	DESCRIPTION
1	1HF671F7AA	1	2, 3, 6, 7	L	13, 15, 17			*A6	SEAT
2	1HG34DX9AA	1	2, 3, 6, 7	L	13, 15, 17			*A6	SEAT BELT, Front Outer, With [CDT] Passenger Jump Seat
3	05124965AA	1	2, 3, 6, 7	L	13, 15, 17				SEAT BELT, Buckle Half
4	68017271AA	1	2, 3, 6, 7	L	13, 15, 17, 53, 55				SCREW, 7/16 X 22M
5	05125999AA	1	2, 3, 6, 7	L	13, 15, 17, 53, 55				CAP, Screw Cover
6	1HF681F7AA	1	2, 3, 6, 7	L	13, 15, 17			*A6	HEADREST
7									BOLT
	06104025AA	1	2, 3, 6, 7	L	13, 15, 17, 53, 55				
		1	3, 7	L	03, 05				
8	05142916AA	1	2, 3, 6, 7	L	13, 15, 17, 53, 55				WASHER
9	06104228AA	2	2, 3, 6, 7	L	13, 15, 17, 53, 55				BOLT
10	06104049AA	2	2, 3, 6, 7	L	13, 15, 17, 53, 55				BOLT
11	68010975AA	4	2, 3, 6, 7	L	13, 15, 17, 53, 55				WASHER
12									NUT
	06105169AA	2	3, 7	L	03, 05				
		2	2, 3, 6, 7	L					

SPRINTER (VB)

SERIES	LINE	BODY	ENGINE	TRANSMISSION
L = LOWLINE	3 = HD DODGE 2WD 2 = Med. Duty DODGE 2WD	03 = CAB CHASSIS WHEEL BASE 3 05 = CAB CHASSIS WHEEL BASE 5 13 = 119 WB 53 = 119 WB 15 = VAN WHEEL BASE 5 55 = WAGON WHEEL BASE 5 17 = VAN WHEEL BASE 7	EG2 = 3.5L V6 Gas Engine EXM = 3.0L V6 Turbo Diesel Engine	DGZ = 5-Speed Auto W5A380 Transmission

Passenger Front Jump Seat With Sales Code [CDT], [E7] Art Grey
Figure IVB-545

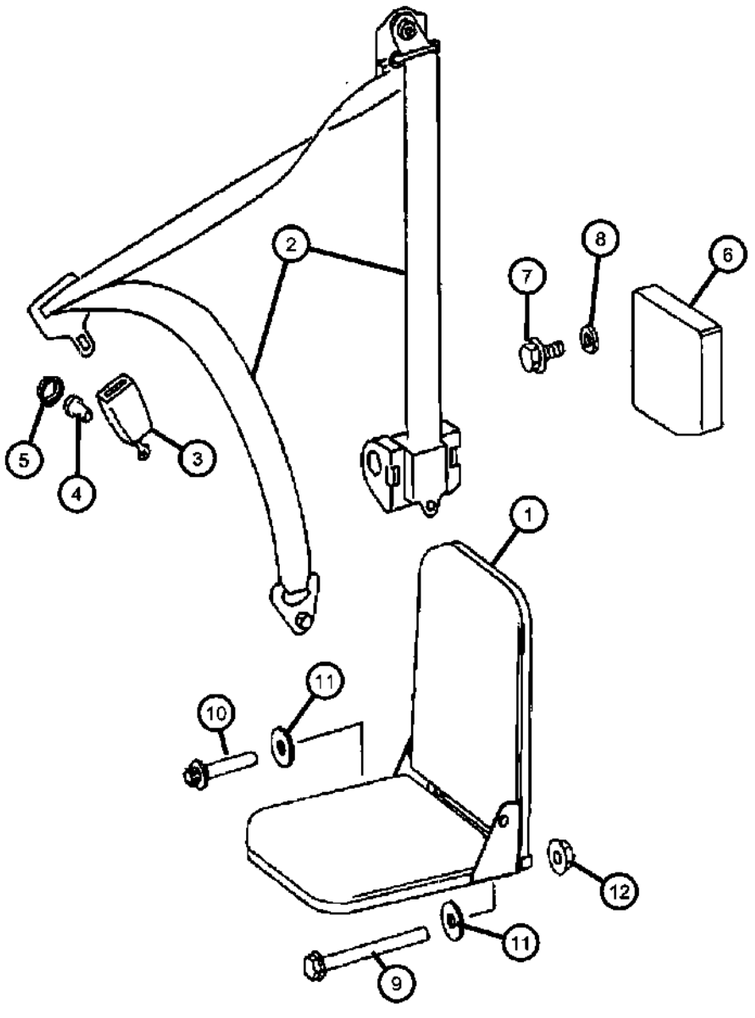

ITEM	PART NUMBER	QTY	LINE	SERIES	BODY	ENGINE	TRANS	TRIM	DESCRIPTION
1	1HF671F7AA	1	2, 3, 6, 7	L	13, 15, 17			*E7	SEAT
2	1HG34DX9AA	1	2, 3, 6, 7	L	13, 15, 17			*E7	SEAT BELT, Front Outer, With [CDT] Passenger Jump Seat
3	05124965AA	1	2, 3, 6, 7	L	13, 15, 17				SEAT BELT, Buckle Half
4	68017271AA	1	2, 3, 6, 7	L	13, 15, 17, 53, 55				SCREW, 7/16 X 22M
5	05125999AA	1	2, 3, 6, 7	L	13, 15, 17, 53, 55				CAP, Screw Cover
6	1HF681F7AA	1	2, 3, 6, 7	L	13, 15, 17			*E7	HEADREST
7									BOLT
	06104025AA	1	2, 3, 6, 7	L	13, 15, 17, 53, 55				
		1	3, 7	L	03, 05				
8	05142916AA	1	2, 3, 6, 7	L	13, 15, 17, 53, 55				WASHER
9	06104228AA	2	2, 3, 6, 7	L	13, 15, 17, 53, 55				BOLT
10	06104049AA	2	2, 3, 6, 7	L	13, 15, 17, 53, 55				BOLT
11	68010975AA	4	2, 3, 6, 7	L	13, 15, 17, 53, 55				WASHER
12									NUT
	06105169AA	2	2, 3, 6, 7	L					
		2	3, 7	L	03, 05				

SPRINTER (VB)

SERIES	LINE	BODY	ENGINE	TRANSMISSION
L = LOWLINE	3 = HD DODGE 2WD 2 = Med. Duty DODGE 2WD	03 = CAB CHASSIS WHEEL BASE 3 05 = CAB CHASSIS WHEEL BASE 5 13 = 119 WB 53 = 119 WB 15 = VAN WHEEL BASE 5 55 = WAGON WHEEL BASE 5 17 = VAN WHEEL BASE 7	EG2 = 3.5L V6 Gas Engine EXM = 3.0L V6 Turbo Diesel Engine	DGZ = 5-Speed Auto W5A380 Transmission

AR = use ase required - = Non illustrrated part

<< RETURN TO GROUP INDEX

Passenger Front Jump Seat With Sales Code [CDT], [F7] Black
Figure IVB-550

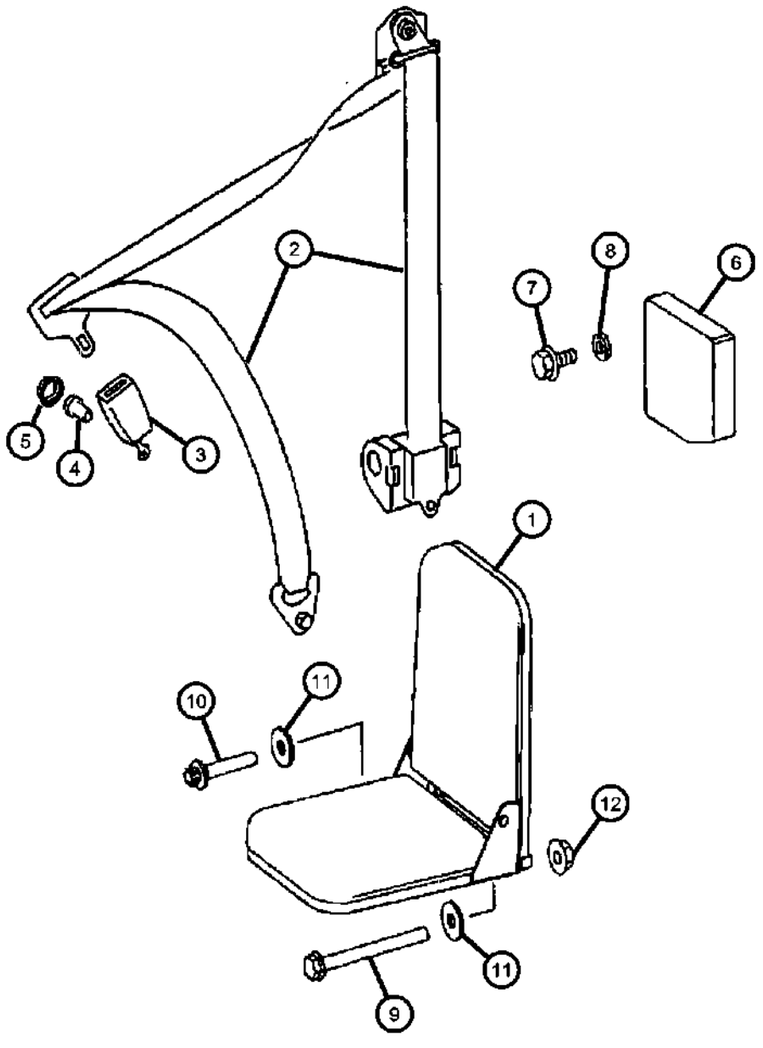

ITEM	PART NUMBER	QTY	LINE	SERIES	BODY	ENGINE	TRANS	TRIM	DESCRIPTION
1	1HF671F7AA	1	2, 3, 6, 7	L	13, 15, 17			*F7	SEAT
2	1HG34DX9AA	1	2, 3, 6, 7	L	13, 15, 17			*F7	SEAT BELT, Front Outer
3	05124965AA	1	2, 3, 6, 7	L	13, 15, 17				SEAT BELT, Buckle Half
4	68017271AA	1	2, 3, 6, 7	L	13, 15, 17, 53, 55				SCREW, 7/16 X 22M
5	05125999AA	1	2, 3, 6, 7	L	13, 15, 17, 53, 55				CAP, Screw Cover
6	1HF681F7AA	1	2, 3, 6, 7	L	13, 15, 17			*F7	HEADREST
7									BOLT
	06104025AA	1	2, 3, 6, 7	L	13, 15, 17, 53, 55				
		1	3, 7	L	03, 05				
8	05142916AA	1	2, 3, 6, 7	L	13, 15, 17, 53, 55				WASHER
9	06104228AA	2	2, 3, 6, 7	L	13, 15, 17, 53, 55				BOLT
10	06104049AA	2	2, 3, 6, 7	L	13, 15, 17, 53, 55				BOLT
11	68010975AA	4	2, 3, 6, 7	L	13, 15, 17, 53, 55				WASHER
12									NUT
	06105169AA	2	2, 3, 6, 7	L					
		2	3, 7	L	03, 05				

SPRINTER (VB)

SERIES	LINE	BODY	ENGINE	TRANSMISSION
L = LOWLINE	3 = HD DODGE 2WD 2 = Med. Duty DODGE 2WD	03 = CAB CHASSIS WHEEL BASE 3 05 = CAB CHASSIS WHEEL BASE 5 13 = 119 WB 53 = 119 WB 15 = VAN WHEEL BASE 5 55 = WAGON WHEEL BASE 5 17 = VAN WHEEL BASE 7	EG2 = 3.5L V6 Gas Engine EXM = 3.0L V6 Turbo Diesel Engine	DGZ = 5-Speed Auto W5A380 Transmission

Seat Box
Figure IVB-555

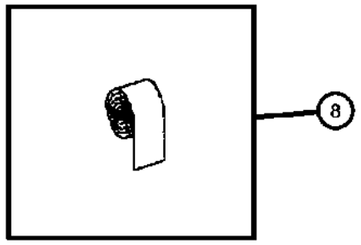

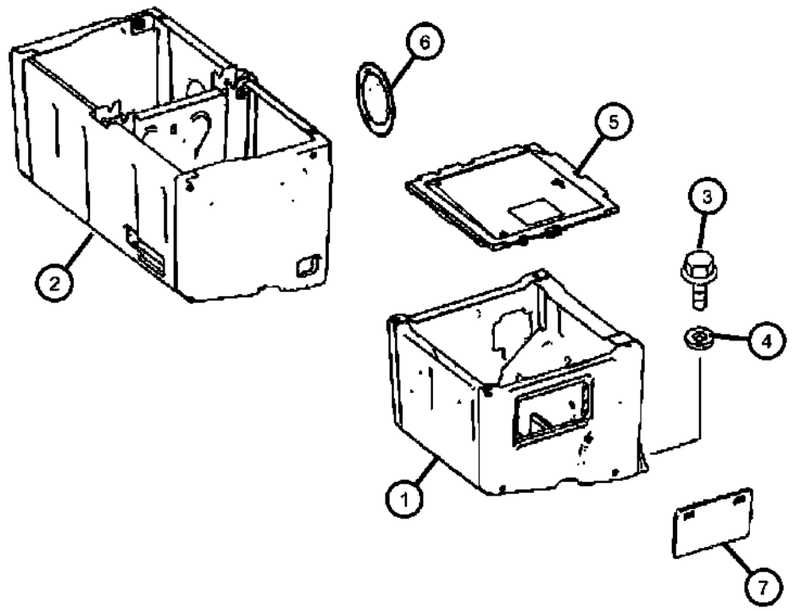

ITEM	PART NUMBER	QTY	LINE	SERIES	BODY	ENGINE	TRANS	TRIM	DESCRIPTION
1									RISER, Seat
	68010863AA	1	2, 3, 6, 7	L					Left
	68010865AA	1	2, 3, 6, 7	L					With [CXX] Driver Suspension Seat, Left
	68010942AA	1	2, 3, 6, 7	L					Right
	68010943AA	1	2, 3, 6, 7	L					With [CXY] Passenger Suspension Seat, Right
2									RISER, Seat
	68010944AA	1	3, 7	L	03, 05				Right
	68010980AA	1	2, 3, 6, 7	L	13, 15, 17, 53, 55				Right
3									SCREW
	05133865AA	4	2, 3, 6, 7	L					Seat Box to Floor
	06104166AA	1	2, 3, 6, 7	L	13, 15, 17, 53, 55				Seat Framework to Floor
4									WASHER
	05133526AA	4	3, 7	L	03, 05				
		4	2, 3, 6, 7	L	13, 15, 17, 53, 55				
5									COVER
	68014719AA	1	2, 3, 6, 7	L					
		1	3, 7	L	03, 05				
6	68014720AA	1	2, 3, 6, 7	L	13, 15, 17				COVER
7									COVER
	1HB12NCVAA	1	2, 3, 6, 7	L	13, 15, 17, 53, 55			*A6	[A6]
		1	2, 3, 6, 7	L	13, 15, 17, 53, 55			*E7	[E7]
		1	2, 3, 6, 7	L	53, 55, 13, 15, 17			*F7	[F7]
		1	3, 7	L	03, 05			*A6	[A6]
		1	3, 7	L	03, 05			*E7	[E7]
		1	3, 7	L	03, 05			*F7	[F7]
8									TAPE
	05114444AA	4	2, 3, 6, 7	L	13, 15, 17, 53, 55				
		4	3, 7	L	03, 05				

SPRINTER (VB)

SERIES	LINE	BODY	ENGINE	TRANSMISSION
L = LOWLINE	3 = HD DODGE 2WD 2 = Med. Duty DODGE 2WD	03 = CAB CHASSIS WHEEL BASE 3 05 = CAB CHASSIS WHEEL BASE 5 13 = 119 WB 53 = 119 WB 15 = VAN WHEEL BASE 5 55 = WAGON WHEEL BASE 5 17 = VAN WHEEL BASE 7	EG2 = 3.5L V6 Gas Engine EXM = 3.0L V6 Turbo Diesel Engine	DGZ = 5-Speed Auto W5A380 Transmission

Rear Seat- 2 Passenger
Figure IVB-610

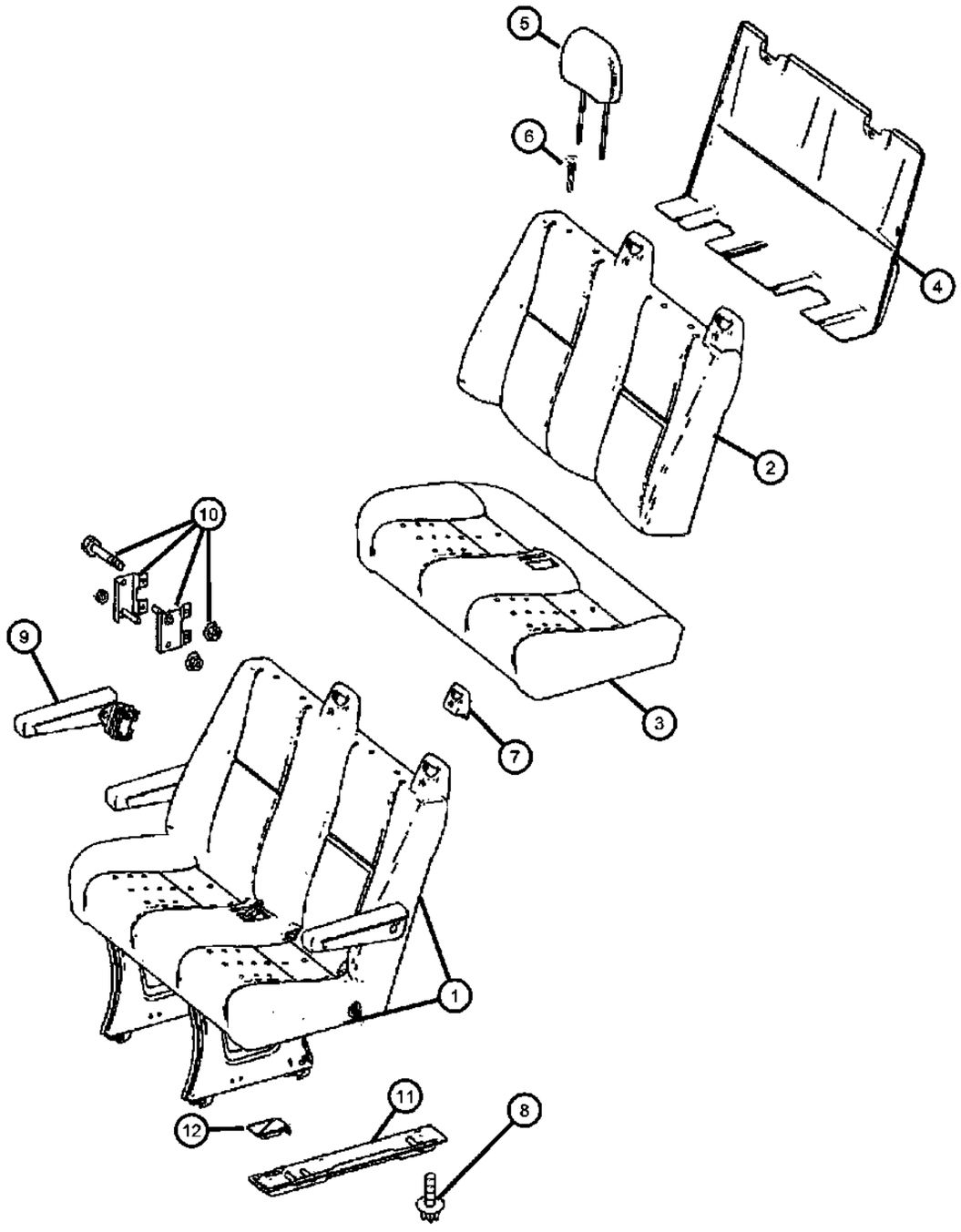

ITEM	PART NUMBER	QTY	LINE	SERIES	BODY	ENGINE	TRANS	TRIM	DESCRIPTION
Note: [CFA]=1ST Rear Bench 2-Passenger [CFY]=2ND Rear Bench 2-Passenger									
1									SEAT COMPLETE, Rear, Two Passenger, 1STand 2ND Rear Bench 2-Passenger Seat
	1JB471A6AA	1	2, 6	L	53, 55			*A6	[A6] Orion Grey Medium
	1JB471E7AA	1	2, 6	L	53, 55			*A6	[E7] Art Grey
	1JB471F7AA	1	2, 6	L	53, 55			*A6	[F7] Black
	1JB491A6AA	1	2, 6	L	53, 55			*A6	[A6] Orion Grey Medium,With [CGU] Child Seat Anchor System Latch
	1JB491E7AA	1	2, 6	L	53, 55			*A6	[E7] Art Grey,With [CGU] Child Seat Anchor System Latch
	1JB491F7AA	1	2, 6	L	53, 55			*A6	[F7] Black,With [CGU] Child Seat Anchor System Latch
2									SEAT BACK, Rear, 2 Passenger, 1STand 2ND Rear Bench 2-Passenger Seat
	1HG931A6AA	1	2, 6	L	53, 55			*A6	[A6] Orion Grey Medium,With [CFA]
	1HG931E7AA	1	2, 6	L	53, 55			*A6	[E7] Art Grey,With [CFA]
	1HG931F7AA	1	2, 6	L	53, 55			*A6	[F7] Black,With [CFA]
3									CUSHION, Rear Seat, Two Passenger, 1STand 2ND Rear Bench 2-Passenger Seat
	1HG961A6AA	1	2, 6	L	53, 55			*A6	[A6] Orion Grey Medium
	1HG961E7AA	1	2, 6	L	53, 55			*A6	[E7] Art Grey
	1HG961F7AA	1	2, 6	L	53, 55			*A6	[F7] Black
4	68011001AA	1	2, 3, 6, 7	L	53, 55				SHIELD, Seat Back, With [CFA] 1ST Rear Bench 2-Passenger Seat and [CFY] 2ND Rear Bench 2-Passenger Seat
5									HEADREST
	1HE59DX9AA	3	2, 3, 6, 7	L				*A6	Standard
	1HE60XDVAA	3	2, 3, 6, 7	L	13, 15, 17, 53, 55			*A6	Adjustable
6	68010824AA	2	2, 3, 6, 7	L					SLEEVE, Headrest
7									COVER, Seat Belt Guide

SPRINTER (VB)

SERIES	LINE	BODY	ENGINE	TRANSMISSION
L = LOWLINE	3 = HD DODGE 2WD 2 = Med. Duty DODGE 2WD	03 = CAB CHASSIS WHEEL BASE 3 05 = CAB CHASSIS WHEEL BASE 5 13 = 119 WB 53 = 119 WB 15 = VAN WHEEL BASE 5 55 = WAGON WHEEL BASE 5 17 = VAN WHEEL BASE 7	EG2 = 3.5L V6 Gas Engine EXM = 3.0L V6 Turbo Diesel Engine	DGZ = 5-Speed Auto W5A380 Transmission

Rear Seat- 2 Passenger
Figure IVB-610

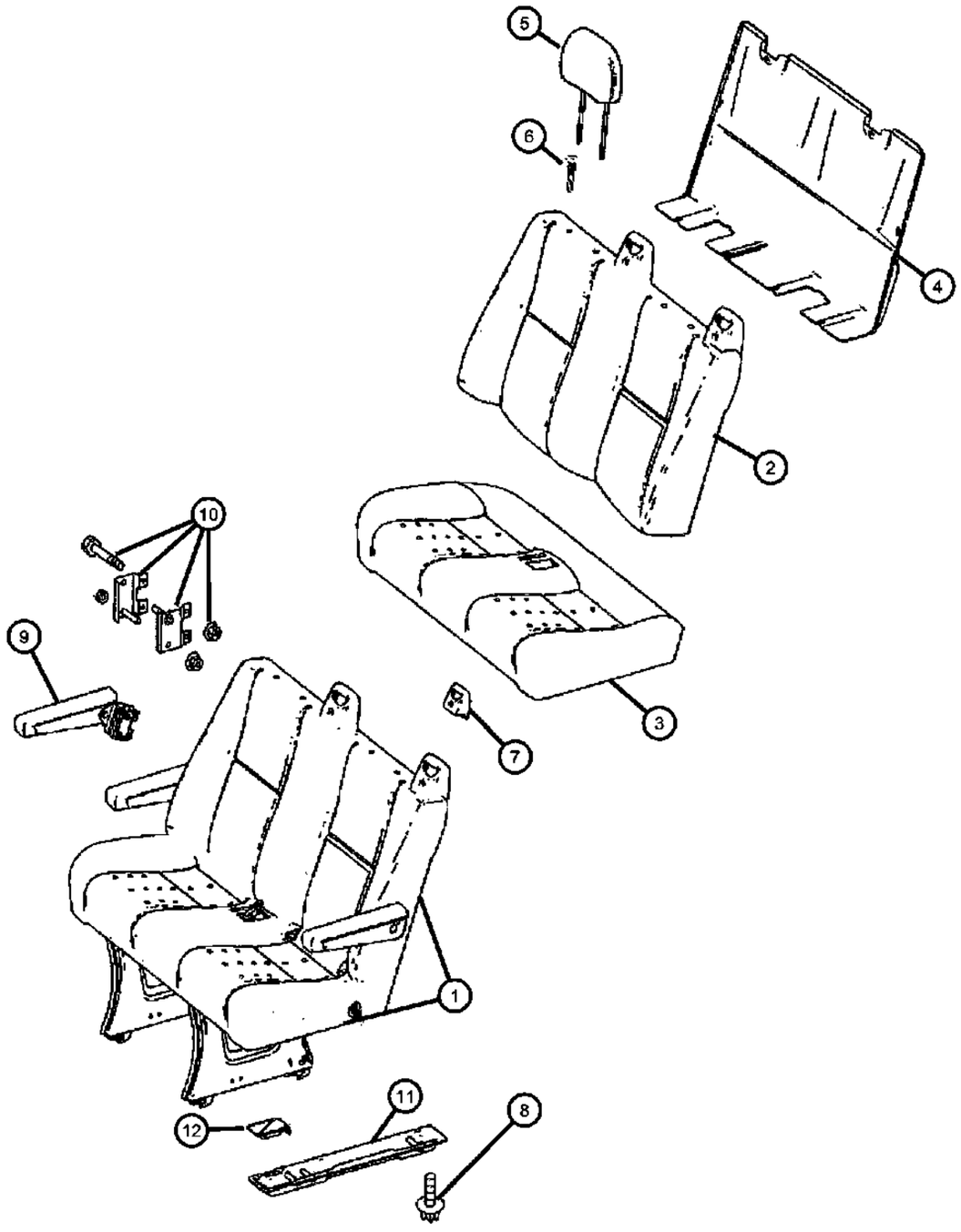

ITEM	PART NUMBER	QTY	LINE	SERIES	BODY	ENGINE	TRANS	TRIM	DESCRIPTION
	68011002AA	2	2, 6	L	53, 55				With [CFA] 1St Rear Bench. 2-Passenger Seat
		2	2, 6	L	53, 55				With [CFY] 2ND Rear Bench. 2-Passenger Seat
8									SCREW
	68011023AA	4	2, 3, 6, 7	L	13, 15, 17, 53, 55				With [CFA] 1ST Rear Bench 2-Passenger
		4	2, 3, 6, 7	L	13, 15, 17, 53, 55				With [CFY] 2ND Rear Bench 2-Passenger
9									ARMREST, Seat
	68010987AA	1	2, 3, 6, 7	L	13, 15, 17, 53, 55				With [CFA] 1ST Rear Bench 2-Passenger Seat, Left
		1	2, 3, 6, 7	L	13, 15, 17, 53, 55				With [CFY] 2ND Rear Bench 2-Passenger Seat, Left
	68010989AA	1	2, 3, 6, 7	L	13, 15, 17, 53, 55				With [CFA] 1ST Rear Bench 2-Passenger Seat, Right
		1	2, 3, 6, 7	L	13, 15, 17, 53, 55				With [CFY] 2ND Rear Bench 2-Passenger Seat, Right
10									BRACKET, Arm Rest
	05134098AA	2	2, 3, 6, 7	L	13, 15, 17, 53, 55				With [CFY] 2ND Rear Bench 2-Passenger Seat
		2	2, 3, 6, 7	L	13, 15, 17, 53, 55				With [CFA] 1ST Rear Bench 2-Passenger Seat
11									BRACKET, Bench Seat Bottom Bracket
	68011017AA	2	2, 3, 6, 7	L	13, 15, 17, 53, 55				With [CFA] 1ST Reae Bench Seat 2-Passenger Seat
		2	2, 3, 6, 7	L	13, 15, 17, 53, 55				With [CFY] 2ND Rear Bench 2-Passenger Seat
12	1HE19DX8AA	1	2, 3, 6, 7	L	13, 15, 17, 53, 55			*A6	COVER, Seat Anchor, With [CFA] 1ST Rear Bench 2-Passenger Seat and [CFY] 2ND Rear Bench 2-Passenger Seat

SPRINTER (VB)

SERIES	LINE	BODY	ENGINE	TRANSMISSION
L = LOWLINE	3 = HD DODGE 2WD 2 = Med. Duty DODGE 2WD	03 = CAB CHASSIS WHEEL BASE 3 05 = CAB CHASSIS WHEEL BASE 5 13 = 119 WB 53 = 119 WB 15 = VAN WHEEL BASE 5 55 = WAGON WHEEL BASE 5 17 = VAN WHEEL BASE 7	EG2 = 3.5L V6 Gas Engine EXM = 3.0L V6 Turbo Diesel Engine	DGZ = 5-Speed Auto W5A380 Transmission

Rear Seat- 3 Passenger
Figure IVB-620

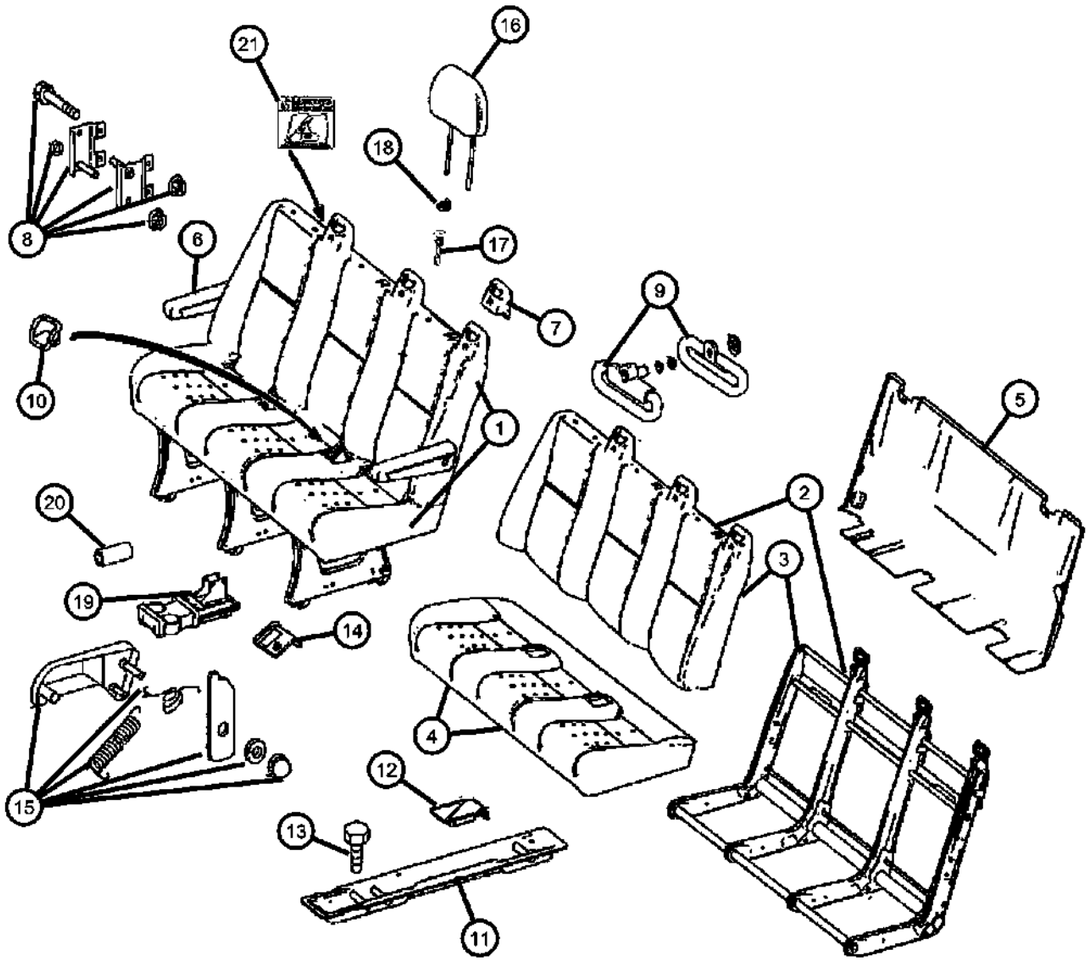

ITEM	PART NUMBER	QTY	LINE	SERIES	BODY	ENGINE	TRANS	TRIM	DESCRIPTION
Note. [CFB] First Rear Bench 3-Passenger. [CFC] 2ND Rear Bench 3-Passenger [CFD] 3RD Rear Bench 3-Passenger [CGU] Child Seat Anchor System Latch									
1									SEAT COMPLETE, Rear, Three Passenger
	1JB561A6AA	1	2, 3, 6, 7	L	13, 15, 17, 53, 55			*A6	[A6] Orion Grey Medium, With [CFB] 1ST Rear Bench 3-Passenger
	1JB561E7AA	1	2, 3, 6, 7	L	13, 15, 17, 53, 55			*A6	[E7] Art Grey, With [CFB] 1ST Rear Bench 3-Passenger
	1JB561F7AA	1	2, 3, 6, 7	L	13, 15, 17, 53, 55			*A6	[F7] Black, With [CFB] 1ST Rear Bench 3-Passenger
	1JB571A6AA	1	2, 3, 6, 7	L	13, 15, 17, 53, 55			*A6	[A6] Orion Grey Medium, With [CFB] 1ST Rear Bench 3-Passenger,With [CGU] Child Seat Anchor System Latch
	1JB571E7AA	1	2, 3, 6, 7	L	13, 15, 17, 53, 55			*A6	[E7] Art Grey, With [CFB] 1ST Rear Bench 3-Passenger,With [CGU] Child Seat Anchor System Latch
	1JB571F7AA	1	2, 3, 6, 7	L	13, 15, 17, 53, 55			*A6	[F7] Black, With [CFB] 1ST Rear Bench 3-Passenger,With [CGU] Child Seat Anchor System Latch
	1JB581A6AA	1	2, 6	L	53, 55			*A6	[A6] Orion Grey Medium, With [CFC] 2ND Rear Bench 3-Passenger
	1JB581E7AA	1	2, 6	L	53, 55			*A6	[E7] Art Grey, With [CFC] 2ND Rear Bench 3-Passenger
	1JB581F7AA	1	2, 6	L	53, 55			*A6	[F7] Black, With [CFC] 2ND Rear Bench 3-Passenger
2									SEAT BACK, Rear, 3 Passenger, 1ST Rear Bench 3-Passenger Seat
	1HG941A6AA	1	2, 3, 6, 7	L	13, 15, 17, 53, 55			*A6	[A6] Orion Grey Medium,With [CFB]
	1HG941E7AA	1	2, 3, 6, 7	L	13, 15, 17, 53, 55			*A6	[E7] Art Grey,With [CFB]
	1HG941F7AA	1	2, 3, 6, 7	L	13, 15, 17, 53, 55			*A6	[F7] Black,With [CFB]
3									SEAT BACK, Rear, 3 Passenger, 2ND Rear Bench 3-Passenger Seat
	1HG951A6AA	1	2, 6	L	53, 55			*A6	[A6] Orion Grey Medium,With [CFC]

SPRINTER (VB)

SERIES	LINE	BODY	ENGINE	TRANSMISSION
L = LOWLINE	3 = HD DODGE 2WD 2 = Med. Duty DODGE 2WD	03 = CAB CHASSIS WHEEL BASE 3 05 = CAB CHASSIS WHEEL BASE 5 13 = 119 WB 53 = 119 WB 15 = VAN WHEEL BASE 5 55 = WAGON WHEEL BASE 5 17 = VAN WHEEL BASE 7	EG2 = 3.5L V6 Gas Engine EXM = 3.0L V6 Turbo Diesel Engine	DGZ = 5-Speed Auto W5A380 Transmission

Rear Seat- 3 Passenger
Figure IVB-620

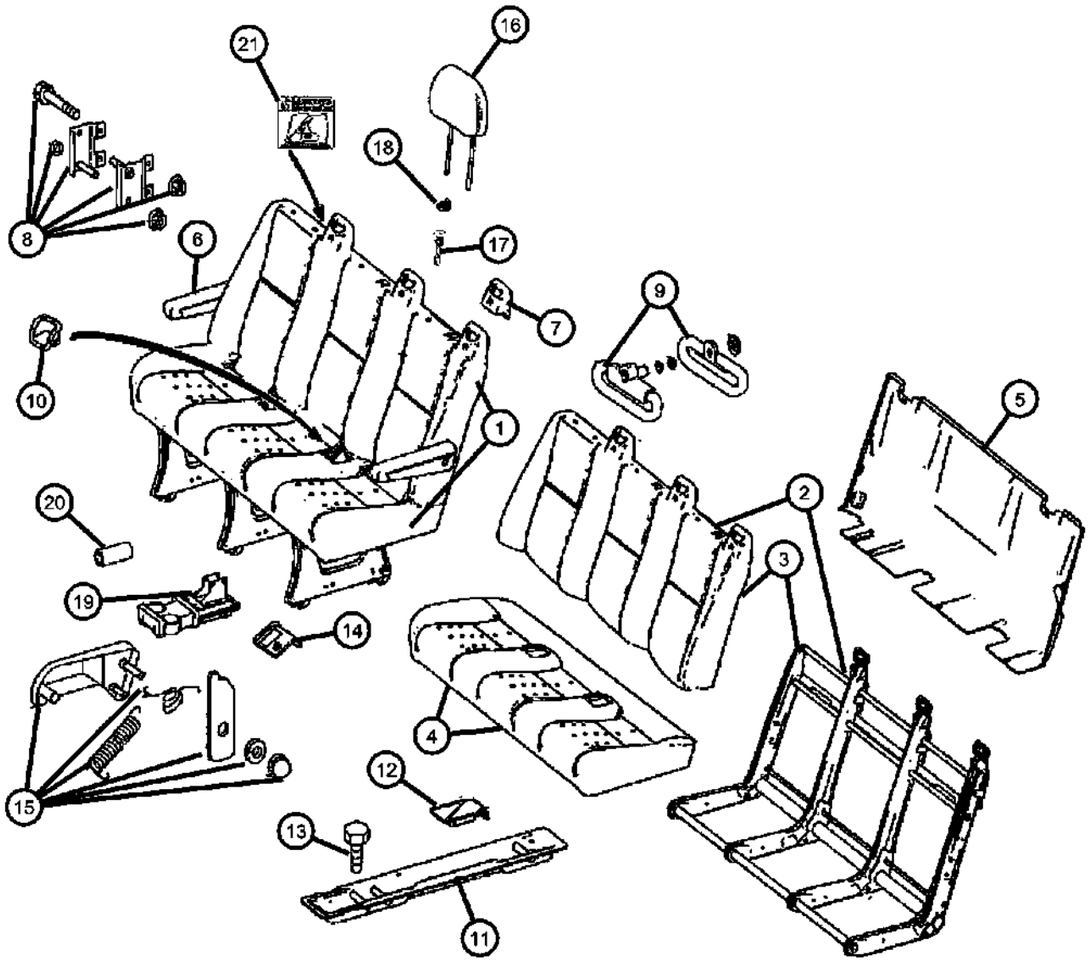

ITEM	PART NUMBER	QTY	LINE	SERIES	BODY	ENGINE	TRANS	TRIM	DESCRIPTION
	1HG951E7AA	1	2, 6	L	53, 55			*A6	[E7] Art Grey,With [CFC]
	1HG951F7AA	1	2, 6	L	53, 55			*A6	[F7] Black,With [CFC]
4									CUSHION, Rear Seat, Three Passenger
	1HG981A6AA	1	2, 3, 6, 7	L	13, 15, 17, 53, 55			*A6	[A6] Orion Grey Medium, With [CFB] 1ST Rear Bench 3-Passenger Seat, With [CFF] Narrow Width
	1HH001F7AA	1	2, 6	L	53, 55			*A6	[F7] Black, With [CFC] 2ND Rear Bench 3-Passenger Seat, With [CFD] Normal Width
	1HG981E7AA	1	2, 3, 6, 7	L	13, 15, 17, 53, 55			*A6	[E7] Art Grey, With [CFB] 1ST Rear Bench 3-Passenger Seat, With [CFF] Narrow Width
	1HG981F7AA	1	2, 3, 6, 7	L	13, 15, 17, 53, 55			*A6	[F7] Black, With [CFB] 1ST Rear Bench 3-Passenger Seat, With [CFF] Narrow Width
	1HH001A6AA	1	2, 6	L	53, 55			*A6	[A6] Orion Grey Medium, With [CFC] 2ND Rear Bench 3-Passenger Seat, With [CFD] Normal Width
	1HH001E7AA	1	2, 6	L	53, 55			*A6	[E7] Art Grey, With [CFC] 2ND Rear Bench 3-Passenger Seat, With [CFD] Normal Width
5									COVER
	68011010AA	1	2, 3, 6, 7	L	13, 15, 17, 53, 55				With [CFB] 1ST Rear Bench 3-Passenger
	68011014AA	1	2, 3, 6, 7	L	13, 15, 17, 53, 55				With [CFC] 2ND Rear Bench 3-Passenger
6									ARMREST, Seat
	68010987AA	1	2, 3, 6, 7	L	13, 15, 17, 53, 55				With [CFB] 1ST Rear Bench 3-Passenger Seat, Left
		1	2, 3, 6, 7	L	13, 15, 17, 53, 55				With [CFC] 2ND Rear Bench 3-Passenger Seat, Left
		1	2, 3, 6, 7	L	13, 15, 17, 53, 55				With [CFD] 3RD Rear Bench 3-Passenger Seat, Left
	68010989AA	1	2, 3, 6, 7	L	13, 15, 17, 53, 55				With [CFB] 1ST Rear Bench 3-Passenger Seat, Right
		1	2, 3, 6, 7	L	13, 15, 17, 53, 55				With [CFC] 2ND Rear Bench 3-Passenger Seat, Right
		1	2, 3, 6, 7	L	13, 15, 17, 53, 55				With [CFD] 3RD Rear Bench 3-Passenger Seat, Right

SPRINTER (VB)

SERIES	LINE	BODY	ENGINE	TRANSMISSION
L = LOWLINE	3 = HD DODGE 2WD 2 = Med. Duty DODGE 2WD	03 = CAB CHASSIS WHEEL BASE 3 05 = CAB CHASSIS WHEEL BASE 5 13 = 119 WB 53 = 119 WB 15 = VAN WHEEL BASE 5 55 = WAGON WHEEL BASE 5 17 = VAN WHEEL BASE 7	EG2 = 3.5L V6 Gas Engine EXM = 3.0L V6 Turbo Diesel Engine	DGZ = 5-Speed Auto W5A380 Transmission

Rear Seat- 3 Passenger
Figure IVB-620

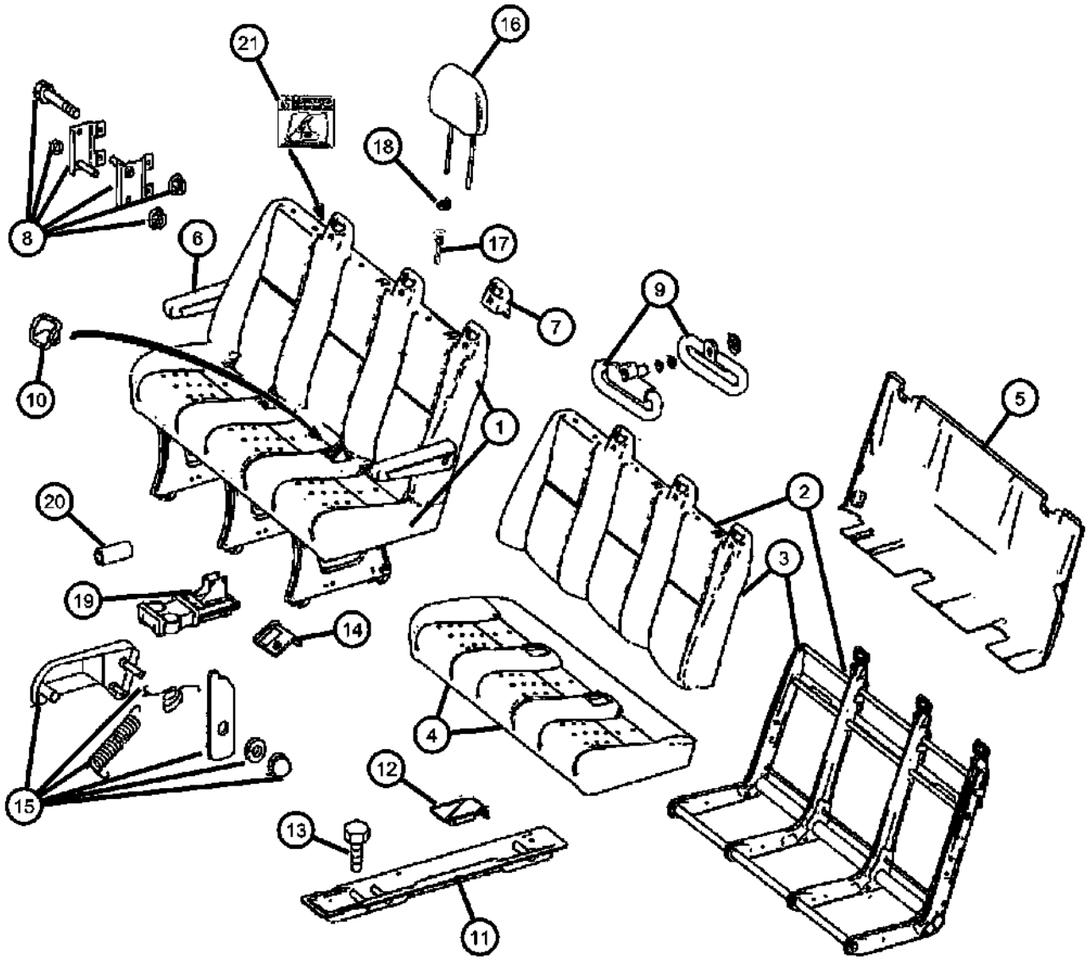

ITEM	PART NUMBER	QTY	LINE	SERIES	BODY	ENGINE	TRANS	TRIM	DESCRIPTION
7									COVER, Seat Belt Guide Cover
	68011002AA	3	2, 6	L	53, 55				With [CFB] 1ST Rear Bench 3-Passenger Seat
		3	2, 6	L	53, 55				With [CFC] 2ND Rear Bench 3-Passenger Seat
		3	2, 6	L	53, 55				With [CFD] 3RD Rear Bench 3-Passenger Seat
8									BRACKET, Arm Rest
	05134098AA	2	2, 3, 6, 7	L	13, 15, 17, 53, 55				With [CFB] 1ST Rear Bench 3-Passenger Seat
		2	2, 3, 6, 7	L	13, 15, 17, 53, 55				With [CFC] 2ND Rear Bench 3-Passenger
		2	2, 3, 6, 7	L	13, 15, 17, 53, 55				With [CFD] 3RD Rear Bench 3-Passenger
9									GUIDE, Seat Belt
	68011003AA	3	2, 3, 6, 7	L	13, 15, 17, 53, 55				With [CFD] 3RD Rear Bench 3-Passenger Seat
		3	2, 3, 6, 7	L	13, 15, 17, 53, 55				With [CFB] 1ST Rear Bench 3-Passenger Seat
		3	2, 3, 6, 7	L	13, 15, 17, 53, 55				With [CFC] 2ND Rear Bench 3-Passenger Seat
10	68011004AA	4	2, 6	L	53, 55				COVER, Seat Anchor, With [CFB] [CFC] [CFD] 1ST, 2ND, and 3RD Rear Bench 3-Passenger Seat
11									BRACKET, Bench Seat Bottom Bracket
	68011017AA	3	2, 3, 6, 7	L	13, 15, 17, 53, 55				With [CFB] 1ST Rear Bench 3-Passenger Seat
		3	2, 3, 6, 7	L	13, 15, 17, 53, 55				With [CFC] 2ND Raer Bench 3-Passenger
		3	2, 3, 6, 7	L	13, 15, 17, 53, 55				With [CFD] 3RD Rear Bench 3-Passenger
12									COVER, Seat Anchor
	1HE19DX8AA	1	2, 3, 6, 7	L	13, 15, 17, 53, 55			*A6	With [CFB] 1ST Rear Bench 3-Passenger Seat
		1	2, 3, 6, 7	L	13, 15, 17, 53, 55			*A6	With [CFC] 2ND Rear Bench 3-Passenger Seat
		1	2, 3, 6, 7	L	13, 15, 17, 53, 55			*A6	With [CFD] 3RD Rear Bench 3-Passenger Seat
13									SCREW
	68011023AA	6	2, 3, 6, 7	L	13, 15, 17, 53, 55				With [CFB] 1ST Rear Bench 3-Passenger

SPRINTER (VB)

SERIES	LINE	BODY	ENGINE	TRANSMISSION
L = LOWLINE	3 = HD DODGE 2WD 2 = Med. Duty DODGE 2WD	03 = CAB CHASSIS WHEEL BASE 3 05 = CAB CHASSIS WHEEL BASE 5 13 = 119 WB 53 = 119 WB 15 = VAN WHEEL BASE 5 55 = WAGON WHEEL BASE 5 17 = VAN WHEEL BASE 7	EG2 = 3.5L V6 Gas Engine EXM = 3.0L V6 Turbo Diesel Engine	DGZ = 5-Speed Auto W5A380 Transmission

Rear Seat- 3 Passenger
Figure IVB-620

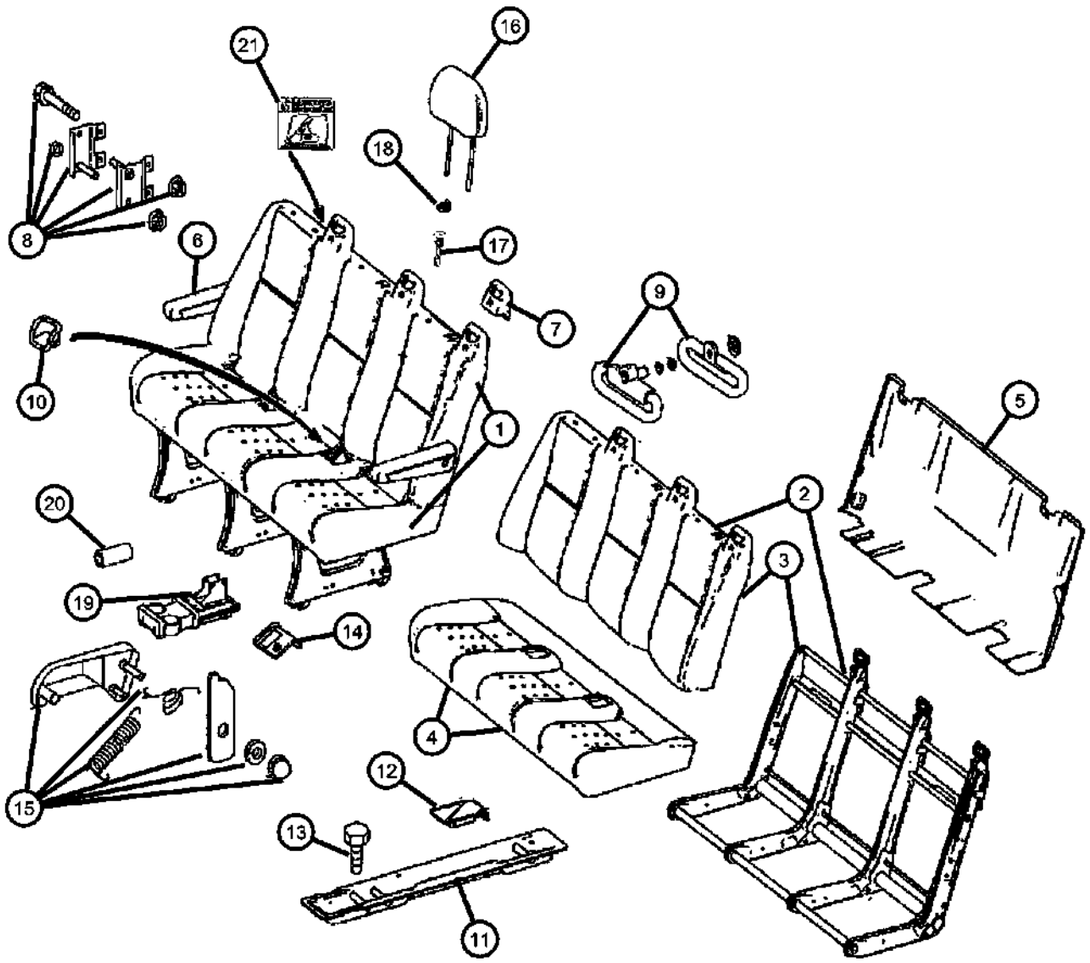

ITEM	PART NUMBER	QTY	LINE	SERIES	BODY	ENGINE	TRANS	TRIM	DESCRIPTION
		6	2, 3, 6, 7	L	13, 15, 17, 53, 55				With [CFC] 2ND Rear Bench 3-Passenger
		6	2, 3, 6, 7	L	13, 15, 17, 53, 55				With [CFD] 3RD Rear Bench 3-Passenger
14									PLATE
	68011005AA	2	2, 3, 6, 7	L	13, 15, 17, 53, 55				With [CFB] 1ST Rear Bench 3-Passenger Seat
		2	2, 3, 6, 7	L	13, 15, 17, 53, 55				With [CFC] 2ND Rear Bench 3-Passenger Seat
		2	2, 3, 6, 7	L	13, 15, 17, 53, 55				With [CFD] 3RD Rear Bench 3-Passenger Seat
15									BRACKET
	68011017AA	3	2, 3, 6, 7	L	13, 15, 17, 53, 55				With [CFB] 1ST Rear Bench 3-Passenger Seat
		3	2, 3, 6, 7	L	13, 15, 17, 53, 55				With [CFC] 2ND Rear Bench 3-Passenger Seat
		3	2, 3, 6, 7	L	13, 15, 17, 53, 55				With [CFD] 3RD Rear Bench 3-Passenger Seat
16									HEADREST
	1HE60XDVAA	3	2, 3, 6, 7	L	13, 15, 17, 53, 55			*A6	Adjustable
	1HE59DX9AA	3	2, 3, 6, 7	L				*A6	Standard
17	68010824AA	2	2, 3, 6, 7	L					SLEEVE, Headrest
18	1JB64DX8AA	3	2, 6	L	53, 55			*A6	HOOK, Coat
19	68010991AA	2	2, 3, 6, 7	L	13, 15, 17, 53, 55				BRACKET
20	05104550AA	1	2, 3, 6, 7	L	13, 15, 17, 53, 55				PIN, Roll
21									LABEL, Warning
	68010994AA	1	2, 3, 6, 7	L	13, 15, 17, 53, 55				With [CFB] 1ST Rear Bench 3-Passenger Seat
		1	2, 3, 6, 7	L	13, 15, 17, 53, 55				With [CFC] 2ND Rear Bench 3-Passenger Seat
		1	2, 3, 6, 7	L	13, 15, 17, 53, 55				With [CFD] 3RD Rear Bench 3-Passenger Seat

SPRINTER (VB)

SERIES	LINE	BODY	ENGINE	TRANSMISSION
L = LOWLINE	3 = HD DODGE 2WD 2 = Med. Duty DODGE 2WD	03 = CAB CHASSIS WHEEL BASE 3 05 = CAB CHASSIS WHEEL BASE 5 13 = 119 WB 53 = 119 WB 15 = VAN WHEEL BASE 5 55 = WAGON WHEEL BASE 5 17 = VAN WHEEL BASE 7	EG2 = 3.5L V6 Gas Engine EXM = 3.0L V6 Turbo Diesel Engine	DGZ = 5-Speed Auto W5A380 Transmission

Front Seat Belts
Figure IVB-710

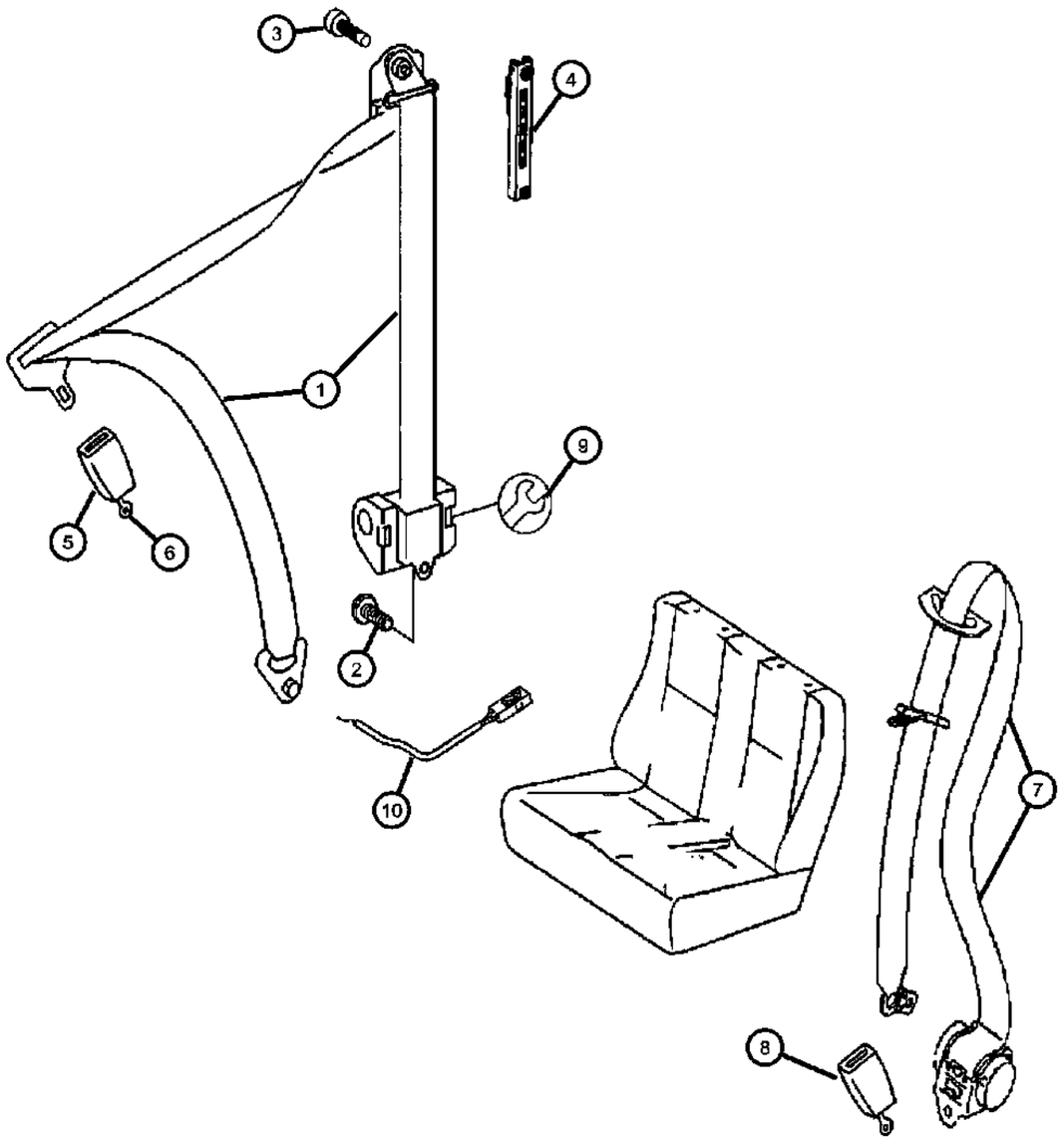

ITEM	PART NUMBER	QTY	LINE	SERIES	BODY	ENGINE	TRANS	TRIM	DESCRIPTION
1									SEAT BELT, Front Outer
	1HD71DX9AA	1	2, 3, 6, 7	L				*A6	With [CGE], Left
		1	2, 3, 6, 7	L				*E7	With [CGE], Left
		1	2, 3, 6, 7	L				*F7	With [CGE], Left
	1HG34DX9AA	1	2, 3, 6, 7	L	13, 15, 17			*A6	With [CDT] Passenger Jump Seat, Right
		1	2, 3, 6, 7	L	13, 15, 17			*E7	With [CDT] Passenger Jump Seat, Right
		1	2, 3, 6, 7	L	13, 15, 17			*F7	With [CDT] Passenger Jump Seat, Right
	1HQ42DX9AA	1	2, 3, 6, 7	L					
	68005046AA	1	2, 3, 6, 7	L	13, 15, 17				With [CGQ] Orange, Right & Left
2	68017269AA	1	2, 3, 6, 7	L	03, 05, 13, 15, 17				SCREW
3	05097581AB	2	2, 3, 6, 7	L					SCREW
4	68017270AA	2	2, 3, 6, 7	L					ADJUSTER, Seat Belt Turning LoopRight & Left
5									SEAT BELT, Buckle Half
	05124982AA	1	3, 7	L	03, 05				Passenger Side w/o seat adjusting, luxury, or suspension seat options., Passenger
		1	2, 3, 6, 7	L	13, 15, 17, 53, 55				Passenger Side w/o seat adjusting, luxury, or suspension seat options., Passenger
	68010832AA	1	2, 3, 6, 7	L					Driver side with seat belt chime, Driver
	68010831AA	1	2, 3, 6, 7	L					Driver side w/o Seat Belt Chime. Passenger side with seat adjusting, luxury, or suspensiom seat options, Passenger And Driver
6									SCREW, Mounting Bolt
	05073723AB	2	2, 3, 6, 7	L	13, 15, 17, 53, 55				
		1	3, 7	L	03, 05				
7									SEAT BELT, Front Outer, Dual Passenger Seat
	1HF08DX9AA	1	2, 3, 6, 7	L				*A6	[A6] With [CW9] Dual Passenger Seat
		1	2, 3, 6, 7	L				*E7	[E7] With [CW9] Dual Passenger Seat

SPRINTER (VB)

SERIES	LINE	BODY	ENGINE	TRANSMISSION
L = LOWLINE	3 = HD DODGE 2WD 2 = Med. Duty DODGE 2WD	03 = CAB CHASSIS WHEEL BASE 3 05 = CAB CHASSIS WHEEL BASE 5 13 = 119 WB 53 = 119 WB 15 = VAN WHEEL BASE 5 55 = WAGON WHEEL BASE 5 17 = VAN WHEEL BASE 7	EG2 = 3.5L V6 Gas Engine EXM = 3.0L V6 Turbo Diesel Engine	DGZ = 5-Speed Auto W5A380 Transmission

Front Seat Belts
Figure IVB-710

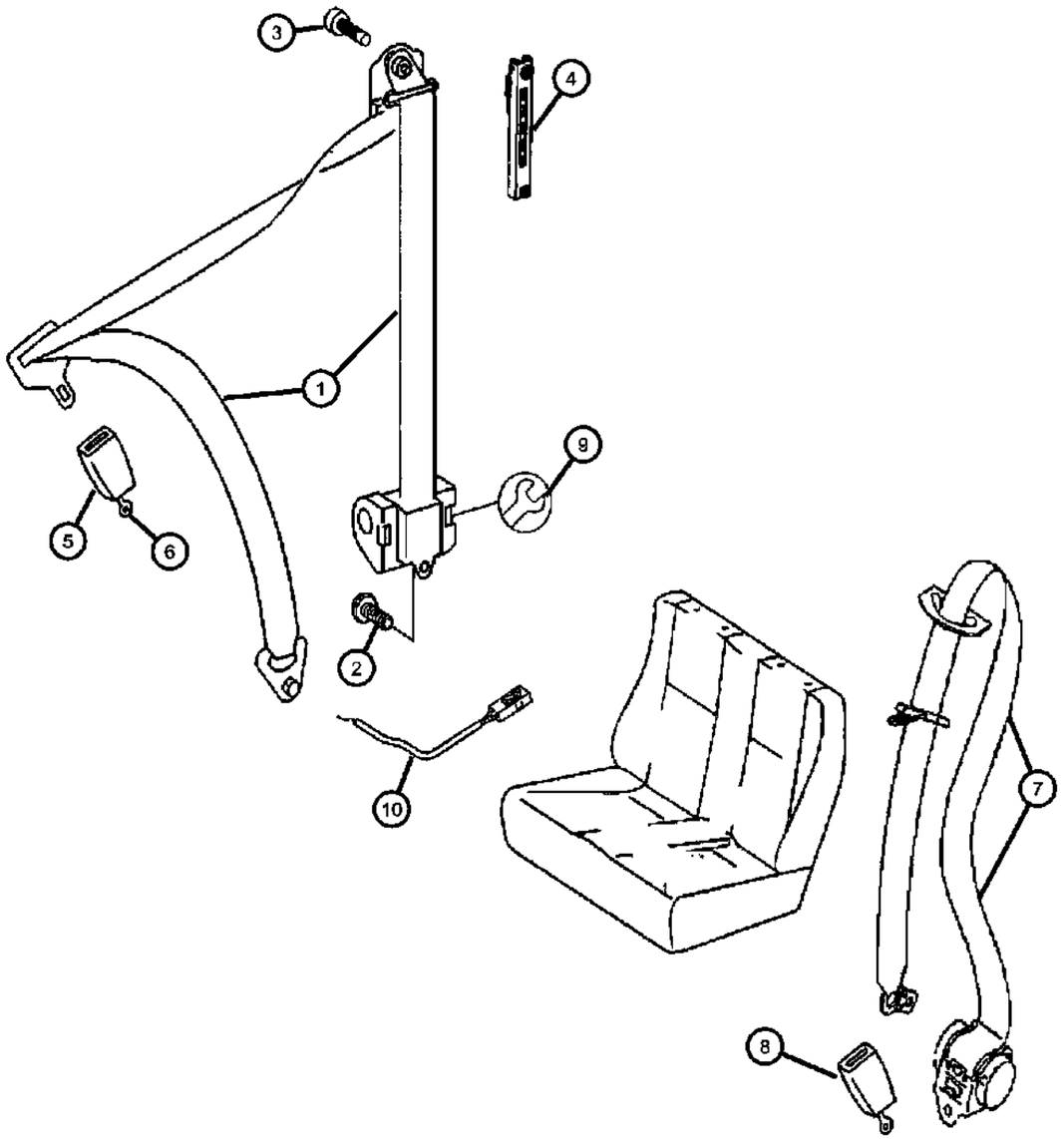

ITEM	PART NUMBER	QTY	LINE	SERIES	BODY	ENGINE	TRANS	TRIM	DESCRIPTION
		1	2, 3, 6, 7	L				*F7	[F7] With [CW9] Dual Passenger Seat
8									SEAT BELT, Buckle Half, Dual Passenger Seat
	05104502AA	2	3, 7	L	03, 05				With [CW9] Dual Passenger Seat
		2	2, 3, 6, 7	L	13, 15, 17, 53, 55				With [CW9] Dual Passenger Seat
9	68016726AA	2	2, 3, 6, 7	L					CONNECTOR, Wiring
10	68016749AA	1	2, 3, 6, 7	L					WIRING

SPRINTER (VB)

SERIES	LINE	BODY	ENGINE	TRANSMISSION
L = LOWLINE	3 = HD DODGE 2WD 2 = Med. Duty DODGE 2WD	03 = CAB CHASSIS WHEEL BASE 3 05 = CAB CHASSIS WHEEL BASE 5 13 = 119 WB 53 = 119 WB 15 = VAN WHEEL BASE 5 55 = WAGON WHEEL BASE 5 17 = VAN WHEEL BASE 7	EG2 = 3.5L V6 Gas Engine EXM = 3.0L V6 Turbo Diesel Engine	DGZ = 5-Speed Auto W5A380 Transmission

Rear Seat Belts
Figure IVB-720

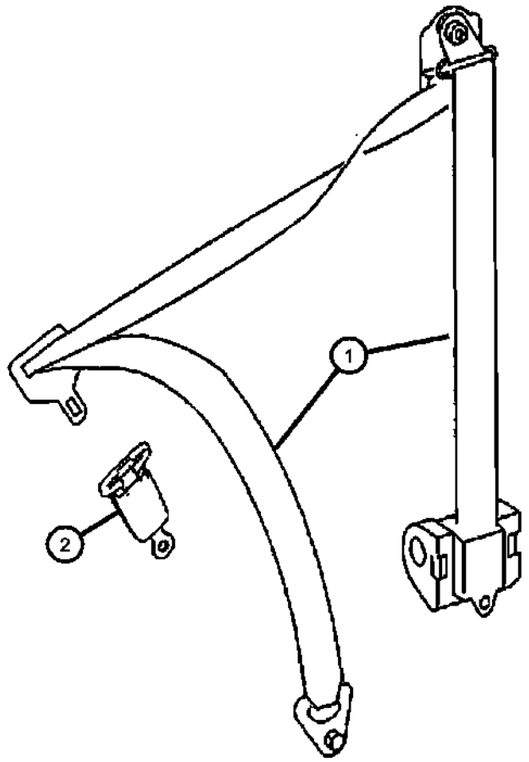

ITEM	PART NUMBER	QTY	LINE	SERIES	BODY	ENGINE	TRANS	TRIM	DESCRIPTION
1									SEAT BELT, Retractor
	68010992AA	2	2, 3, 6, 7	L	13, 15, 17, 53, 55				With [CFY] 2ND Rear Bench 2-Passenger Seat
		3	2, 3, 6, 7	L	13, 15, 17, 53, 55				With [CFC] 2ND Rear Bench 3-Passenger Seat
		2	2, 3, 6, 7	L	13, 15, 17, 53, 55				With [4Z1 or 4XS] National Version for Canada or National Version for USA
		3	2, 3, 6, 7	L	13, 15, 55, 17, 53				With [CFD] 3RD Rear Bench 3-Passenger Seat
		2	2, 3, 6, 7	L	13, 15, 17, 53, 55				With [CFA] 1ST Rear Bench 2-Passenger Seat
		3	2, 3, 6, 7	L	13, 15, 17, 53, 55				With [CFB] 1ST Rear Bench 3-Passenger Seat
2									SEAT BELT, Buckle Half
	05104502AA	2	2, 3, 6, 7	L	13, 15, 17, 53, 55				With [CFA] 1ST Rear Bench 2-Passenger Seat
		3	2, 3, 6, 7	L	13, 15, 17, 53, 55				With [CFB] 1ST Rear Bench 3-Passenger Seat
		2	2, 3, 6, 7	L	13, 15, 17, 53, 55				With [CFY] 2ND Rear Bench 2-Passenger Seat
		3	2, 3, 6, 7	L	13, 15, 17, 53, 55				With [CFC] 2ND Rear Bench 3-Passenger
		3	2, 3, 6, 7	L	13, 15, 17, 53, 55				With [CFD] 3RD Rear Bench 3[-Passenger Seat

SPRINTER (VB)

SERIES	LINE	BODY	ENGINE	TRANSMISSION
L = LOWLINE	3 = HD DODGE 2WD 2 = Med. Duty DODGE 2WD	03 = CAB CHASSIS WHEEL BASE 3 05 = CAB CHASSIS WHEEL BASE 5 13 = 119 WB 53 = 119 WB 15 = VAN WHEEL BASE 5 55 = WAGON WHEEL BASE 5 17 = VAN WHEEL BASE 7	EG2 = 3.5L V6 Gas Engine EXM = 3.0L V6 Turbo Diesel Engine	DGZ = 5-Speed Auto W5A380 Transmission

Group - SVB

Body Sheet Metal Except Doors

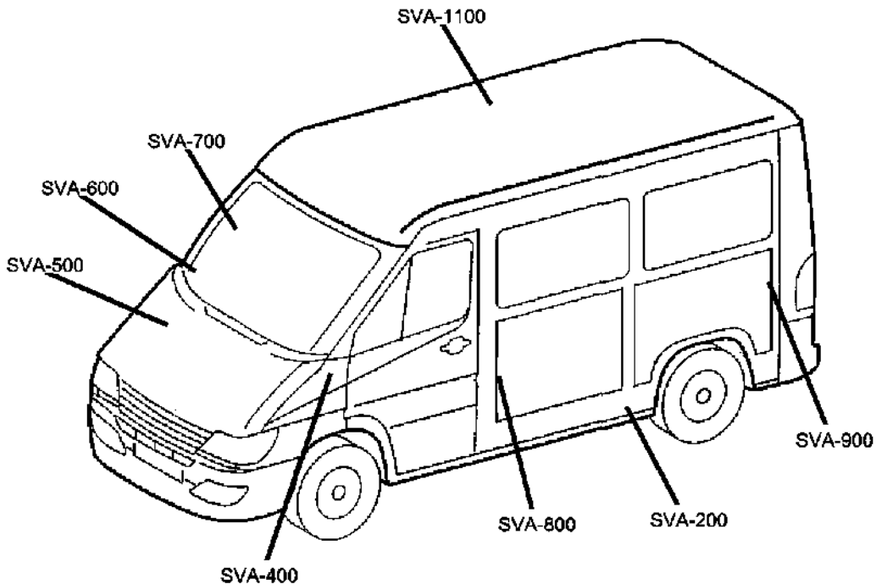

SVB-1100 Roof Panels	**SVB-1200** Sunroof	**SVB-1600** Luggage Rack	**SVB-200** Floor Pans
SVB-300 Plugs	**SVB-400** Front Fenders	**SVB-500** Hood and Hood Release	**SVB-600** Cowl and Dash Panel
SVB-700 Glass and Rear View MIrror	**SVB-800** Aperture Panel	**SVB-900** Quarter Panel and Pillars	

Group - SVB Body Sheet Metal Except Doors

Illustration Title — Group-Fig. No.

Floor Pans
Battery Support ..... Fig. SVB - 205
Substructure Front ..... Fig. SVB - 210
Substructure Center ..... Fig. SVB - 215
Substructure Rear ..... Fig. SVB - 220

Plugs
Body Plugs ..... Fig. SVB - 310
Body Plugs ..... Fig. SVB - 320
Ventilation Flap ..... Fig. SVB - 330
Ventilation Flap ..... Fig. SVB - 340

Front Fenders
Outer Fender and Front End ..... Fig. SVB - 410
Inner Fender and Attaching Parts ..... Fig. SVB - 420

Hood and Hood Release
Hood ..... Fig. SVB - 510

Cowl and Dash Panel
Cowl Panel ..... Fig. SVB - 610
Insturment Panel Lining ..... Fig. SVB - 620
Instrument Panel Lining, Inner ..... Fig. SVB - 625
Passenger Compartment Damping ..... Fig. SVB - 630
Floor Mats,Entry,Load and Passenger Compartment ..... Fig. SVB - 640

Glass and Rear View MIrror
Windshield & Rear Glass / Cab Chassis ..... Fig. SVB - 705
Windshield, Partition & Roof Glass / Cargo Van ..... Fig. SVB - 710
Windshield / Passenger Van ..... Fig. SVB - 715
Rear Cargo Door Glass ..... Fig. SVB - 720
Sliding Door Glass ..... Fig. SVB - 725
Driver & Passenger Door Glass ..... Fig. SVB - 730
Fixed Glass Without Sliding Door ..... Fig. SVB - 735
Rear Side Glass ..... Fig. SVB - 740
Rear Side And Quarter Glass ..... Fig. SVB - 745
Window & Head Side Airbag ..... Fig. SVB - 750

Aperture Panel
Front Aperture,Inner left ..... Fig. SVB - 810
Front Aperture,Outer Left ..... Fig. SVB - 820
Front Aperture,Inner Right ..... Fig. SVB - 830
Front Aperture,Outer,Right ..... Fig. SVB - 840

Quarter Panel and Pillars
Outer Side Panel, Left ..... Fig. SVB - 905
Outer Side Panel, Right ..... Fig. SVB - 910
Side Panel Inner, Left ..... Fig. SVB - 915
Side Panel Inner, Right ..... Fig. SVB - 920

Roof Panels
Low Roof ..... Fig. SVB - 1105
High Roof Panel ..... Fig. SVB - 1110
Super High Roof ..... Fig. SVB - 1115

Sunroof
Sunroof ..... Fig. SVB - 1210

Luggage Rack
Luggage Rack ..... Fig. SVB - 1610

Battery Support
Figure SVB-205

ITEM	PART NUMBER	QTY	LINE	SERIES	BODY	ENGINE	TRANS	TRIM	DESCRIPTION
1	68006358AA	1	2, 3, 6, 7						COVER
2	05126197AA	2	2, 3, 6, 7						SCREW, Console to Frame M6x12
3	68006357AA	1	2, 3, 6, 7						TRAY, Battery

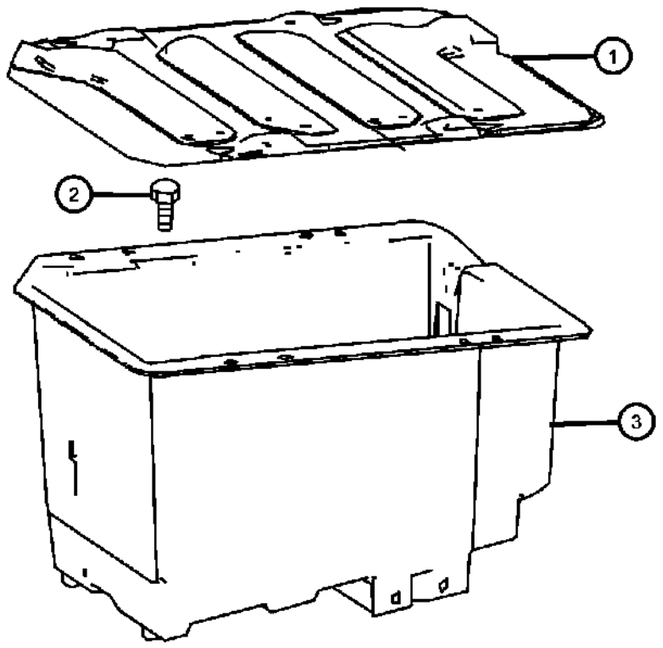

SPRINTER (VB)

SERIES	LINE	BODY	ENGINE	TRANSMISSION
L = LOWLINE	3 = HD DODGE 2WD 2 = Med. Duty DODGE 2WD	03 = CAB CHASSIS WHEEL BASE 3 05 = CAB CHASSIS WHEEL BASE 5 13 = 119 WB 53 = 119 WB 15 = VAN WHEEL BASE 5 55 = WAGON WHEEL BASE 5 17 = VAN WHEEL BASE 7	EG2 = 3.5L V6 Gas Engine EXM = 3.0L V6 Turbo Diesel Engine	DGZ = 5-Speed Auto W5A380 Transmission

Substructure Front
Figure SVB-210

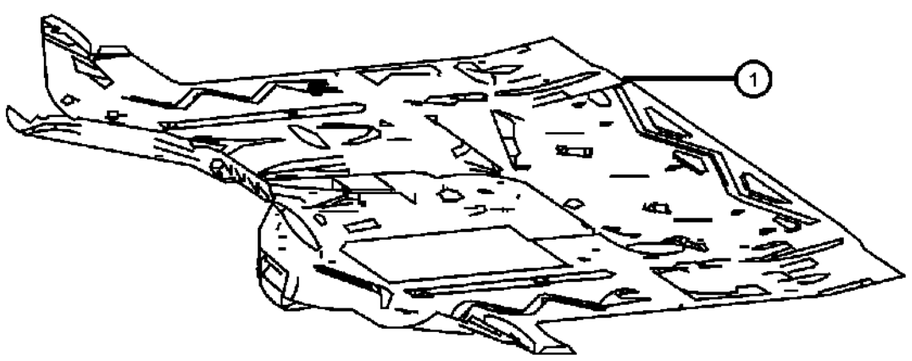

ITEM	PART NUMBER	QTY	LINE	SERIES	BODY	ENGINE	TRANS	TRIM	DESCRIPTION
1	68008207AA	1	2, 3, 6, 7						PAN, Floor

SPRINTER (VB)

SERIES	LINE	BODY	ENGINE	TRANSMISSION
L = LOWLINE	3 = HD DODGE 2WD 2 = Med. Duty DODGE 2WD	03 = CAB CHASSIS WHEEL BASE 3 05 = CAB CHASSIS WHEEL BASE 5 13 = 119 WB 53 = 119 WB 15 = VAN WHEEL BASE 5 55 = WAGON WHEEL BASE 5 17 = VAN WHEEL BASE 7	EG2 = 3.5L V6 Gas Engine EXM = 3.0L V6 Turbo Diesel Engine	DGZ = 5-Speed Auto W5A380 Transmission

Substructure Center
Figure SVB-215

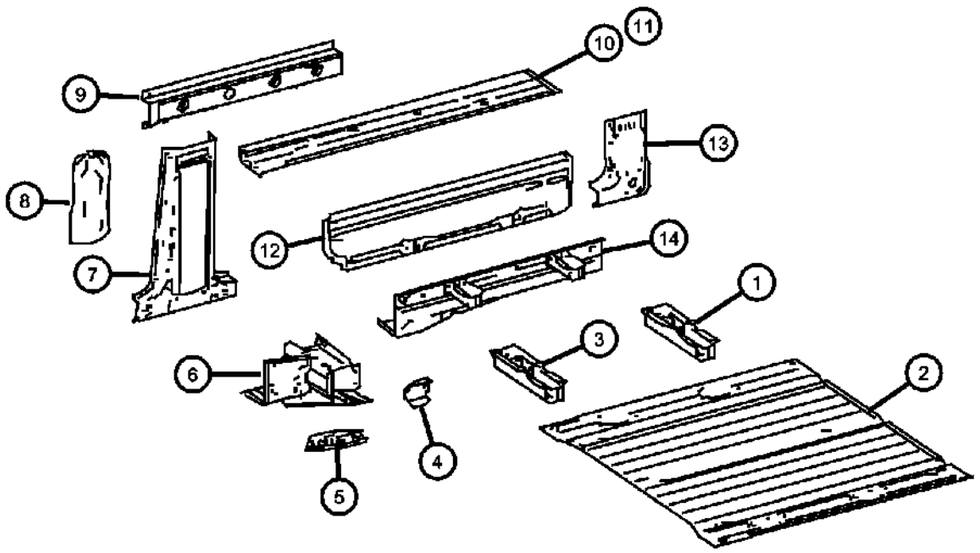

ITEM	PART NUMBER	QTY	LINE	SERIES	BODY	ENGINE	TRANS	TRIM	DESCRIPTION
1	68008250AA	1	2, 3, 6, 7		13, 15, 17, 53, 55				CROSSMEMBER, Front Frame, Outside, Left
2	68008223AA	1	2, 3, 6, 7		13, 15, 17, 53, 55				PAN, Center Floor, Central
3	68008250AA	1	2, 3, 6, 7		13, 15, 17, 53, 55				CROSSMEMBER, Front Frame, Outside, Right
4	68008213AA	2	2, 3, 6, 7						BRACKET, Crash Sensor
5									SEAL
	68008220AA	1	3, 7		03, 05				
		1	2, 6		13, 15, 17, 53, 55				
	68008222AA	1	2, 3, 6, 7						[MC9]
6									BRACKET
	68008260AA	1	2, 3, 6, 7		13, 15, 17, 53, 55				B-Pillar on the Left
	68008272AA	1	2, 3, 6, 7		13, 15, 17, 53, 55				B-Pillar on the Right
7									PILLAR, Side Cargo Door
	68008266AA	1	2, 3, 6, 7		13, 15, 17, 53, 55				B-Pillar on the Left
	68008275AA	1	2, 3, 6, 7		13, 15, 17, 53, 55				B-Pillar on the Right
8	68008217AA	1	2, 3, 6, 7						INSULATION, B-Pillar
9	68008298AA	1	2, 3, 6, 7		13, 15, 17, 53, 55				SUPPORT, Sill ReinforcementRight & Left
10									PAN, Floor
	68008234AA	1	2, 3, 6, 7		13, 15, 17				Central Right, Outside
	68008236AA	1	2, 3, 6, 7		13, 15, 17, 53, 55				Central Left, Outside
11	68008236AA	1	2, 3, 6, 7		13, 15, 17, 53, 55				PAN, Floor, With Additional Auxilary Heater
12									SUPPORT, Sill Reinforcement
	68008253AA	1	2, 3, 6, 7		13, 15, 17, 53, 55				Outside, Left
	68008258AA	1	2, 3, 6, 7		13, 15, 17, 53, 55				Outside, Right
13									PILLAR, Side Cargo Door
	68008276AA	1	2, 3, 6, 7		13, 15, 17, 53, 55				C-Pillar, Left
	68008279AA	1	2, 3, 6, 7		13, 15, 17, 53, 55				C-Pillar, Right

SPRINTER (VB)

SERIES	LINE	BODY	ENGINE	TRANSMISSION
L = LOWLINE	3 = HD DODGE 2WD 2 = Med. Duty DODGE 2WD	03 = CAB CHASSIS WHEEL BASE 3 05 = CAB CHASSIS WHEEL BASE 5 13 = 119 WB 53 = 119 WB 15 = VAN WHEEL BASE 5 55 = WAGON WHEEL BASE 5 17 = VAN WHEEL BASE 7	EG2 = 3.5L V6 Gas Engine EXM = 3.0L V6 Turbo Diesel Engine	DGZ = 5-Speed Auto W5A380 Transmission

Substructure Center
Figure SVB-215

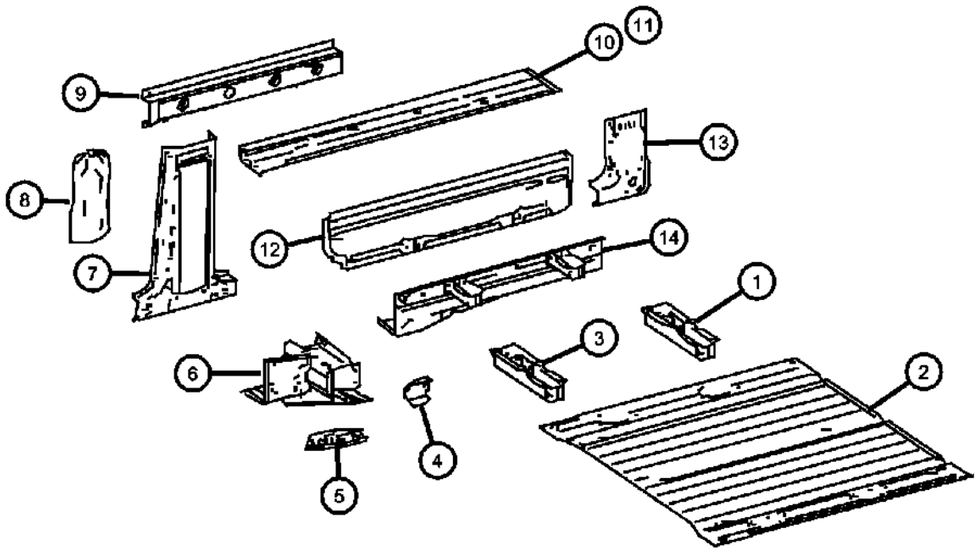

ITEM	PART NUMBER	QTY	LINE	SERIES	BODY	ENGINE	TRANS	TRIM	DESCRIPTION
14									PANEL
	68008289AA	1	2, 3, 6, 7		13, 15, 17, 53, 55				Front Left
	68008294AA	1	2, 3, 6, 7		13, 15, 17, 53, 55				Left Rear Entrance

SPRINTER (VB)

SERIES	LINE	BODY	ENGINE	TRANSMISSION
L = LOWLINE	3 = HD DODGE 2WD 2 = Med. Duty DODGE 2WD	03 = CAB CHASSIS WHEEL BASE 3 05 = CAB CHASSIS WHEEL BASE 5 13 = 119 WB 53 = 119 WB 15 = VAN WHEEL BASE 5 55 = WAGON WHEEL BASE 5 17 = VAN WHEEL BASE 7	EG2 = 3.5L V6 Gas Engine EXM = 3.0L V6 Turbo Diesel Engine	DGZ = 5-Speed Auto W5A380 Transmission

Substructure Rear
Figure SVB-220

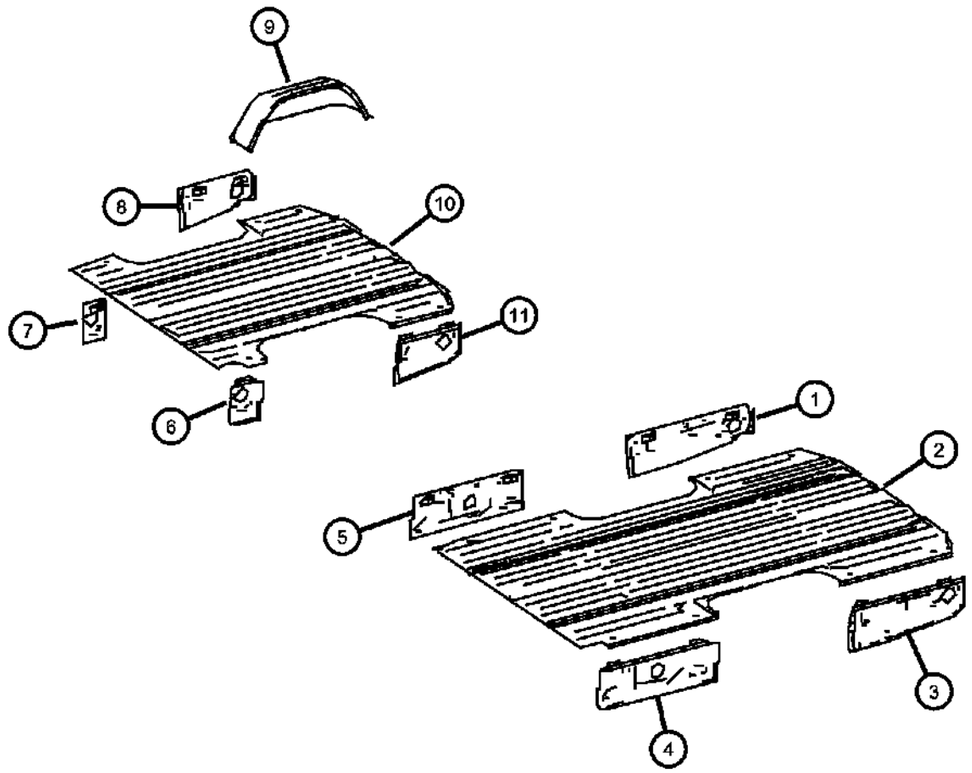

ITEM	PART NUMBER	QTY	LINE	SERIES	BODY	ENGINE	TRANS	TRIM	DESCRIPTION
1	68008352AA	1	2, 3, 6, 7		15, 55				SUPPORT
2	68008303AA	1	2, 3, 6, 7		13, 15, 17, 53, 55				PANEL, Rear
3	68008353AA	1	2, 3, 6, 7		15, 55				SUPPORT
4	68008334AA	1	2, 3, 6, 7		15, 17, 55				SUPPORT, C-Pillar Left
5	68008341AA	1	2, 3, 6, 7		15, 17, 55				SUPPORT, C-Pillar Right
6	68008333AA	1	2, 3, 6, 7		13, 53				SUPPORT, C-Pillar Left
7	68008340AA	1	2, 3, 6, 7		13, 53				SUPPORT, C-Pillar Right
8	68008350AA	1	2, 3, 6, 7		13, 53				SUPPORT, Rear Right
9	68008346AA	2	2, 6		13, 15, 17, 53, 55				PANEL, Wheelhouse
10	68008307AA	1	2, 6		13, 53				PAN, Rear Floor
11	68008351AA	1	2, 3, 6, 7		13, 53				SUPPORT, Rear Left

SPRINTER (VB)

SERIES	LINE	BODY	ENGINE	TRANSMISSION
L = LOWLINE	3 = HD DODGE 2WD 2 = Med. Duty DODGE 2WD	03 = CAB CHASSIS WHEEL BASE 3 05 = CAB CHASSIS WHEEL BASE 5 13 = 119 WB 53 = 119 WB 15 = VAN WHEEL BASE 5 55 = WAGON WHEEL BASE 5 17 = VAN WHEEL BASE 7	EG2 = 3.5L V6 Gas Engine EXM = 3.0L V6 Turbo Diesel Engine	DGZ = 5-Speed Auto W5A380 Transmission

Body Plugs
Figure SVB-310

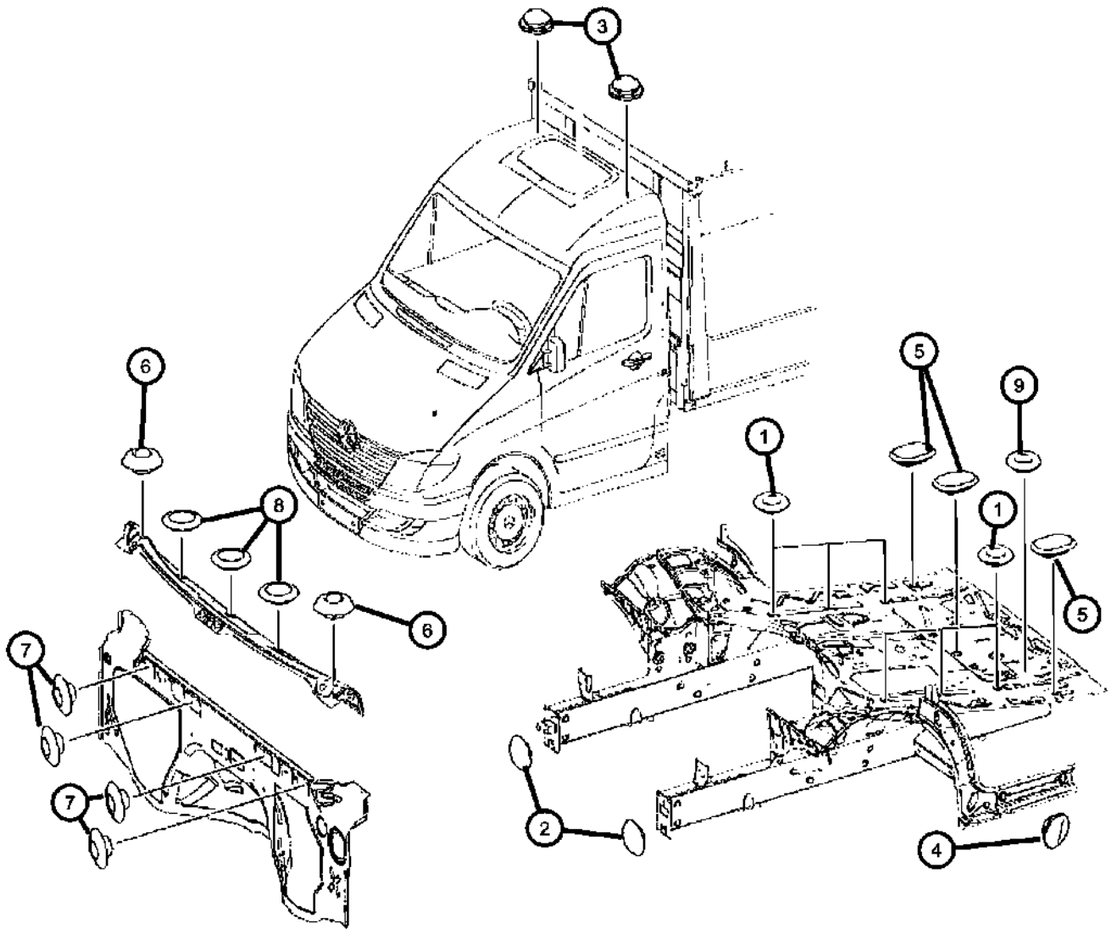

ITEM	PART NUMBER	QTY	LINE	SERIES	BODY	ENGINE	TRANS	TRIM	DESCRIPTION
1									PLUG, Body
	68006359AA	2	3, 7		03, 05				Front Floor [20MM]
	68006360AA	5	3, 7		03, 05				Front Floor [15MM]
	68036735AA	1	2, 3, 6, 7						Front Floor Below Passenger Seat [22.9 x 32.4MM]
2	68006361AA	2	3, 7		03, 05				PLUG, Body, Front Frame [10MM]
3	05098417AA	2	3, 7		03, 05				PLUG, Roof, Inside [15.5MM]
4	68006953AA	1	3, 7		03, 05				PLUG, [36 MM]
5									PLUG, Body
	68006364AA	AR	2, 3, 6, 7						Front Floor [15x25MM]
	68006954AA	1	2, 3, 6, 7						Front Floor [27x41MM]
6	05103253AA	2	3, 7		03, 05				PLUG, Body, Window Sill Support [10MM]
7	68006362AA	5	3, 7		03, 05				PLUG, Body, Fire Wall [12MM]
8	68006363AA	3	3, 7		03, 05				PLUG, At Window Sill Support [25MM]
9	68006360AA	5	3, 7		03, 05				PLUG, Body, Below Seats [15MM]

SPRINTER (VB)

SERIES	LINE	BODY	ENGINE	TRANSMISSION
L = LOWLINE	3 = HD DODGE 2WD 2 = Med. Duty DODGE 2WD	03 = CAB CHASSIS WHEEL BASE 3 05 = CAB CHASSIS WHEEL BASE 5 13 = 119 WB 53 = 119 WB 15 = VAN WHEEL BASE 5 55 = WAGON WHEEL BASE 5 17 = VAN WHEEL BASE 7	EG2 = 3.5L V6 Gas Engine EXM = 3.0L V6 Turbo Diesel Engine	DGZ = 5-Speed Auto W5A380 Transmission

AR = use ase required - = Non illustrrated part

<< RETURN TO GROUP INDEX

Body Plugs
Figure SVB-320

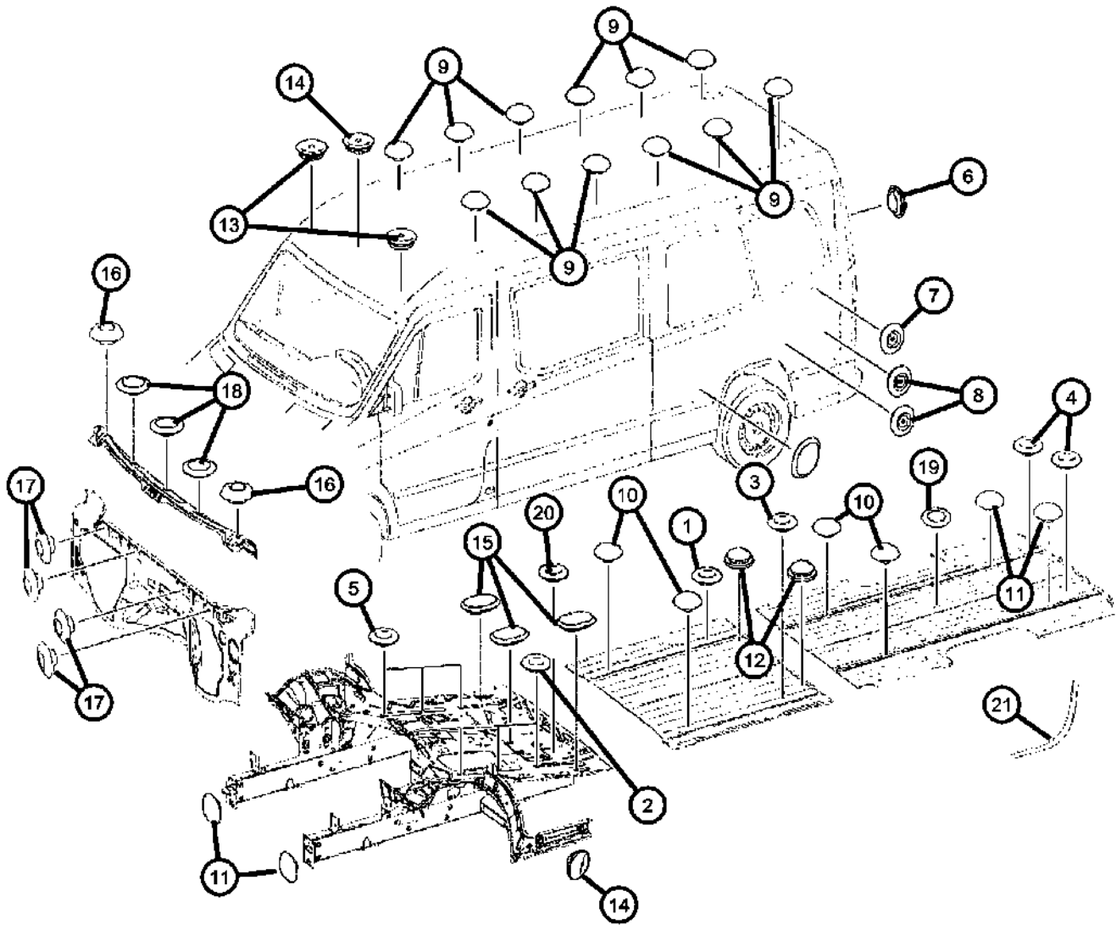

ITEM	PART NUMBER	QTY	LINE	SERIES	BODY	ENGINE	TRANS	TRIM	DESCRIPTION
1	68008280AA	2	2, 3, 6, 7		13, 15, 17, 53, 55				PLUG, Central Floor [35MM]
2									PLUG, Body
	68006360AA	5	2, 3, 6, 7		13, 15, 17, 53, 55				Front Floor [15MM]
	68006359AA	2	2, 3, 6, 7		13, 15, 17, 53, 55				Front Floor [20MM]
3	68006359AA	10	2, 3, 6, 7		13, 15, 17, 53, 55				PLUG, Body, Central Floor [20MM]
4	68006359AA	10	2, 3, 6, 7		13, 15, 17, 53, 55				PLUG, Body, Rear Floor [20MM]
5	68036735AA	1	2, 3, 6, 7						PLUG, Body, Below Passenger Seat [22.9x34.4MM]
6	68006359AA	1	2, 3, 6, 7		13, 15, 17, 53, 55				PLUG, Body, Rear End, Door [20MM]
7	68006360AA	5	2, 3, 6, 7		13, 15, 17, 53, 55				PLUG, Body, Side Panel [15MM]
8	68008280AA	2	2, 3, 6, 7		13, 15, 17, 53, 55				PLUG, Side Panel [35MM]
9									PLUG, Body
	68006361AA	16	2, 3, 6, 7		13, 53				Roof [10MM] / Up To Chassis [S 162103 / 01/31/07] Or Up To Chassis [A 960009 / 11/23/06]
	68026461AA	16	2, 3, 6, 7		13, 53				
		22	3, 6, 2, 7		15, 55				Roof [18.5MM] / After Chassis [S 162104 / 01/31/07] Or After Chassis [A 962845 / 02/21/07]
10	68006361AA	4	2, 3, 6, 7		13, 15, 17, 53, 55				PLUG, Body, Floor Plate [10 MM]
11	68006361AA	2	2, 3, 6, 7		13, 15, 17, 53, 55				PLUG, Body, Front Frame Area [10MM]
12	05096545AA	2	2, 3, 6, 7		13, 15, 17, 53, 55				PLUG, Body, Rubber Buffer [12MM]
13	68042921AA	2	2, 3, 6, 7		13, 15, 17, 53, 55				PLUG, Roof [40MM]
14	68006953AA	2	2, 3, 6, 7		13, 15, 17, 53, 55				PLUG, Roof & Frame [25MM]
15									PLUG, Body
	68006364AA	AR	2, 3, 6, 7						Front Floor & Side Panel [15x25MM]
	68006954AA	1	2, 3, 6, 7						Front Floor [27x41MM]
16	05103253AA	2	2, 3, 6, 7		13, 15, 17, 53, 55				PLUG, Body, Window Sill Support [10MM]

SPRINTER (VB)

SERIES	LINE	BODY	ENGINE	TRANSMISSION
L = LOWLINE	3 = HD DODGE 2WD 2 = Med. Duty DODGE 2WD	03 = CAB CHASSIS WHEEL BASE 3 05 = CAB CHASSIS WHEEL BASE 5 13 = 119 WB 53 = 119 WB 15 = VAN WHEEL BASE 5 55 = WAGON WHEEL BASE 5 17 = VAN WHEEL BASE 7	EG2 = 3.5L V6 Gas Engine EXM = 3.0L V6 Turbo Diesel Engine	DGZ = 5-Speed Auto W5A380 Transmission

AR = use ase required - = Non illustrrated part

<< RETURN TO GROUP INDEX

Body Plugs
Figure SVB-320

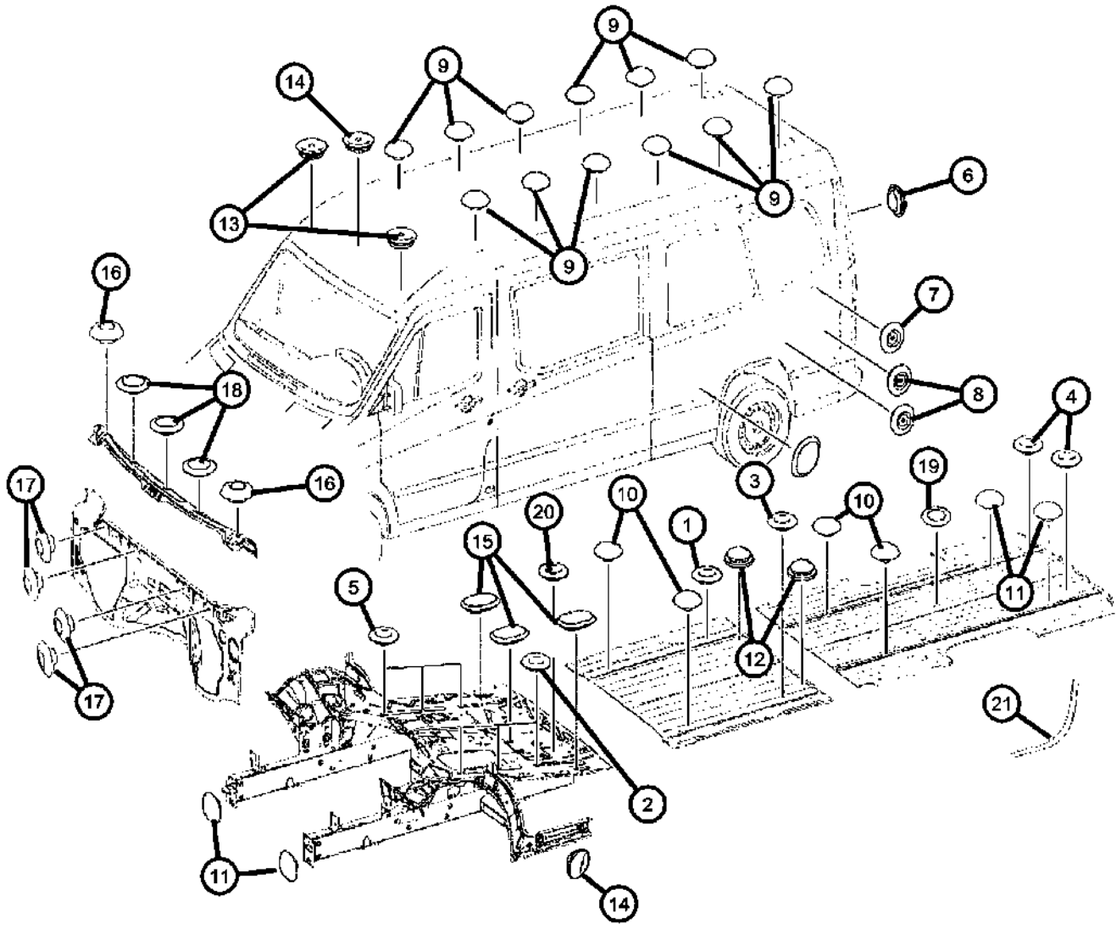

ITEM	PART NUMBER	QTY	LINE	SERIES	BODY	ENGINE	TRANS	TRIM	DESCRIPTION
17	68006362AA	5	2, 3, 6, 7		13, 15, 17, 53, 55				PLUG, Body, At Fire Wall [12MM]
18	68006363AA	3	2, 3, 6, 7		13, 15, 17, 53, 55				PLUG, Window Sill Support [25MM]
19	68008281AA	1	2, 6		53, 55				GROMMET, Central Floor [29.59MM]
20	68006360AA	5	2, 3, 6, 7		13, 17, 53, 55, 15				PLUG, Body, Floor Below Front Seats [15MM]
21	05114444AA	8	2, 3, 6, 7		13, 15, 17, 53, 55				TAPE

SPRINTER (VB)

SERIES	LINE	BODY	ENGINE	TRANSMISSION
L = LOWLINE	3 = HD DODGE 2WD 2 = Med. Duty DODGE 2WD	03 = CAB CHASSIS WHEEL BASE 3 05 = CAB CHASSIS WHEEL BASE 5 13 = 119 WB 53 = 119 WB 15 = VAN WHEEL BASE 5 55 = WAGON WHEEL BASE 5 17 = VAN WHEEL BASE 7	EG2 = 3.5L V6 Gas Engine EXM = 3.0L V6 Turbo Diesel Engine	DGZ = 5-Speed Auto W5A380 Transmission

AR = use ase required - = Non illustrrated part

<< RETURN TO GROUP INDEX

Ventilation Flap
Figure SVB-330

ITEM	PART NUMBER	QTY	LINE	SERIES	BODY	ENGINE	TRANS	TRIM	DESCRIPTION
1	05104472AA	2	3, 7		03, 05				EXHAUSTER, Quarter Panel, Flap
2	05124736AA	1	3, 7		03, 05				EXHAUSTER, Quarter Panel, Duct
3	05124903AA	2	3, 7		03, 05				EXHAUSTER, Quarter Panel, Grille
4	05125574AA	4	3, 7		03, 05				CLIP, U Type

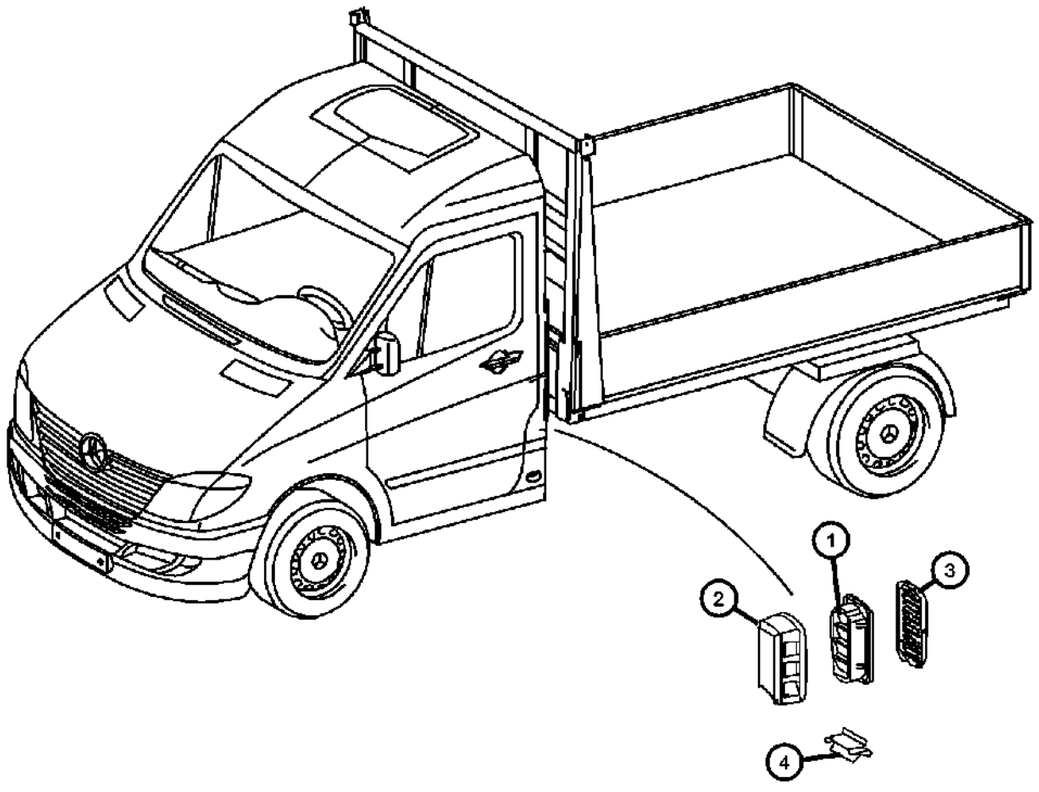

SPRINTER (VB)

SERIES	LINE	BODY	ENGINE	TRANSMISSION
L = LOWLINE	3 = HD DODGE 2WD 2 = Med. Duty DODGE 2WD	03 = CAB CHASSIS WHEEL BASE 3 05 = CAB CHASSIS WHEEL BASE 5 13 = 119 WB 53 = 119 WB 15 = VAN WHEEL BASE 5 55 = WAGON WHEEL BASE 5 17 = VAN WHEEL BASE 7	EG2 = 3.5L V6 Gas Engine EXM = 3.0L V6 Turbo Diesel Engine	DGZ = 5-Speed Auto W5A380 Transmission

Ventilation Flap
Figure SVB-340

ITEM	PART NUMBER	QTY	LINE	SERIES	BODY	ENGINE	TRANS	TRIM	DESCRIPTION
1	05104472AA	2	2, 3, 6, 7		13, 15, 17, 53, 55				EXHAUSTER, Quarter Panel

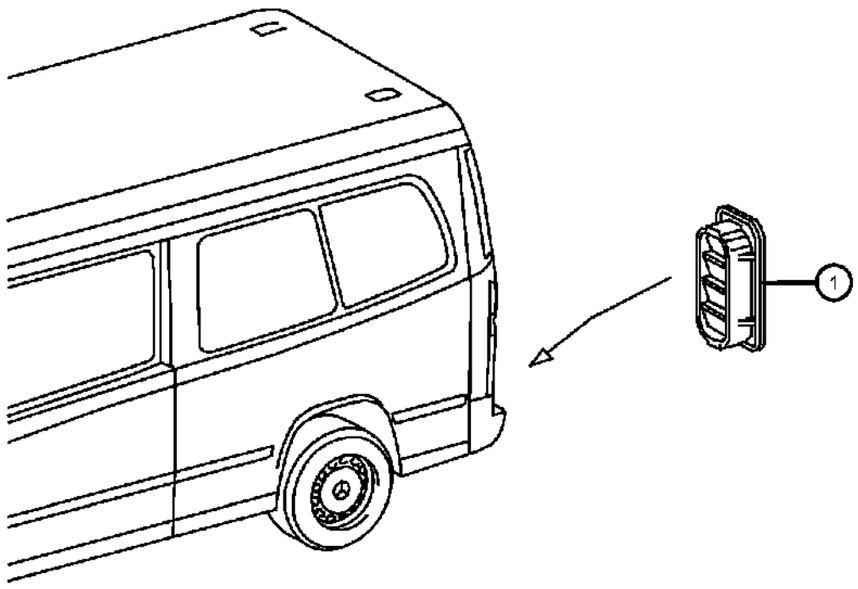

SPRINTER (VB)

SERIES	LINE	BODY	ENGINE	TRANSMISSION
L = LOWLINE	3 = HD DODGE 2WD 2 = Med. Duty DODGE 2WD	03 = CAB CHASSIS WHEEL BASE 3 05 = CAB CHASSIS WHEEL BASE 5 13 = 119 WB 53 = 119 WB 15 = VAN WHEEL BASE 5 55 = WAGON WHEEL BASE 5 17 = VAN WHEEL BASE 7	EG2 = 3.5L V6 Gas Engine EXM = 3.0L V6 Turbo Diesel Engine	DGZ = 5-Speed Auto W5A380 Transmission

Outer Fender and Front End
Figure SVB-410

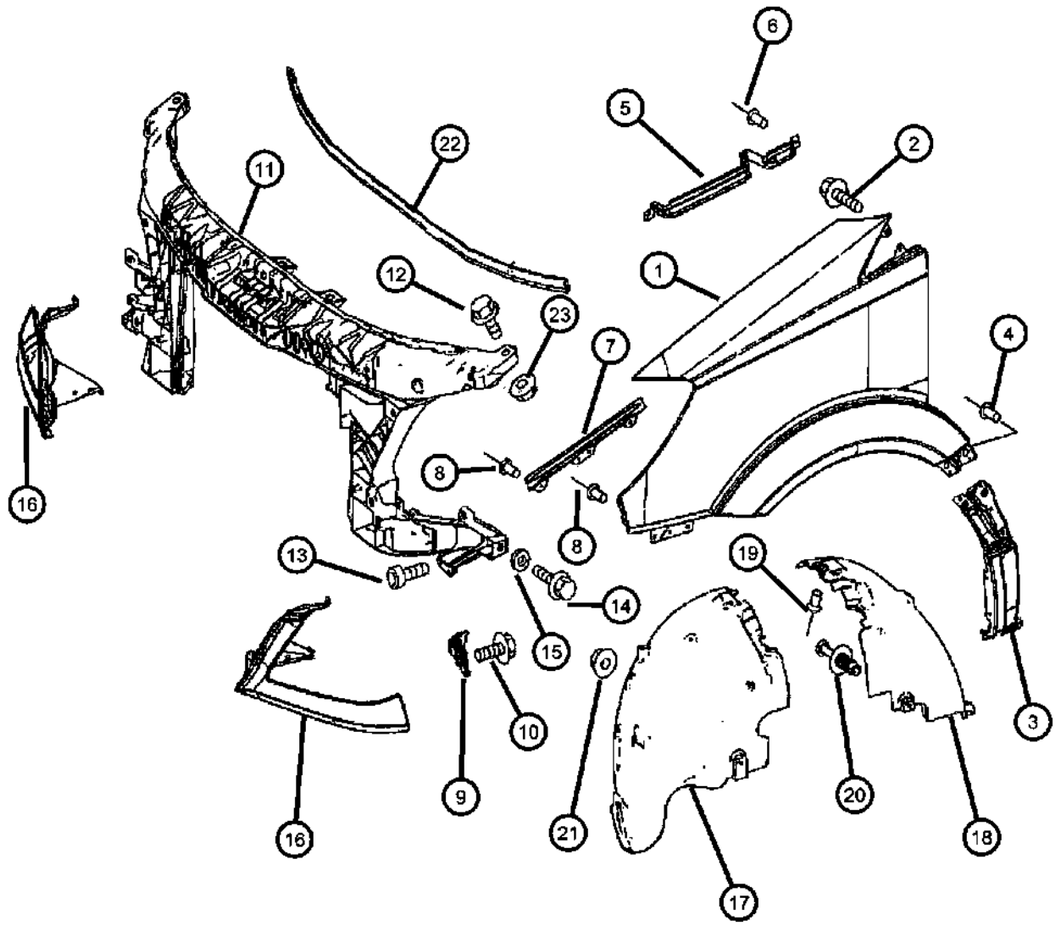

ITEM	PART NUMBER	QTY	LINE	SERIES	BODY	ENGINE	TRANS	TRIM	DESCRIPTION
1									FENDER, Front
	68009869AA	1	2, 7, 3, 6						Left
	68009877AA	1	2, 3, 6, 7						Right
2	06104120AA	4	2, 3, 6, 7		13, 15, 17, 53, 55				SCREW, Hex Head, M6x12
3									EXTENSION, Fender
	68009880AA	1	2, 3, 6, 7						Right
	68009871AA	1	2, 3, 6, 7						Left
4	68009873AA	2	2, 3, 6, 7		13, 15, 17, 53, 55				RIVET, Blind
5									SUPPORT, Fender
	68004962AA	1	2, 3, 6, 7						Left
	68004963AA	1	2, 3, 6, 7						Right
6	68009873AA	3	2, 3, 6, 7						RIVET, Blind
7									SUPPORT, Fender
	68009874AA	1	2, 3, 6, 7						Left
	68009875AA	1	2, 3, 6, 7						Right
8	68009873AA	3	2, 3, 6, 7						RIVET, Blind
9									RETAINER
	1HE32XDVAA	1	2, 3, 6, 7						Right
	1HE33XDVAA	1	2, 3, 6, 7						Left
10	06104634AA	2	2, 3, 6, 7						SCREW, Console
11	68014737AA	1	2, 3, 6, 7						SUPPORT, Radiator
12	05135858AA	2	2, 3, 6, 7						BOLT, Hex Head
13	68010553AA	2	2, 3, 6, 7		13, 15, 17, 53, 55				BOLT, Hex Head
14	06104025AA	4	2, 3, 6, 7		13, 15, 17, 53, 55				BOLT
15	05098108AA	4	2, 3, 6, 7		13, 15, 17, 53, 55				WASHER, Flat
16									PANEL, Headlamp support
	68005392AA	1	2, 3, 6, 7		13, 15, 17, 53, 55				With Wiper, Left
		1	3, 7		03, 05				With Wiper, Left
	68005393AA	1	2, 3, 6, 7		13, 15, 17, 53, 55				With Wiper, Right

SPRINTER (VB)

SERIES	LINE	BODY	ENGINE	TRANSMISSION
L = LOWLINE	3 = HD DODGE 2WD 2 = Med. Duty DODGE 2WD	03 = CAB CHASSIS WHEEL BASE 3 05 = CAB CHASSIS WHEEL BASE 5 13 = 119 WB 53 = 119 WB 15 = VAN WHEEL BASE 5 55 = WAGON WHEEL BASE 5 17 = VAN WHEEL BASE 7	EG2 = 3.5L V6 Gas Engine EXM = 3.0L V6 Turbo Diesel Engine	DGZ = 5-Speed Auto W5A380 Transmission

Outer Fender and Front End
Figure SVB-410

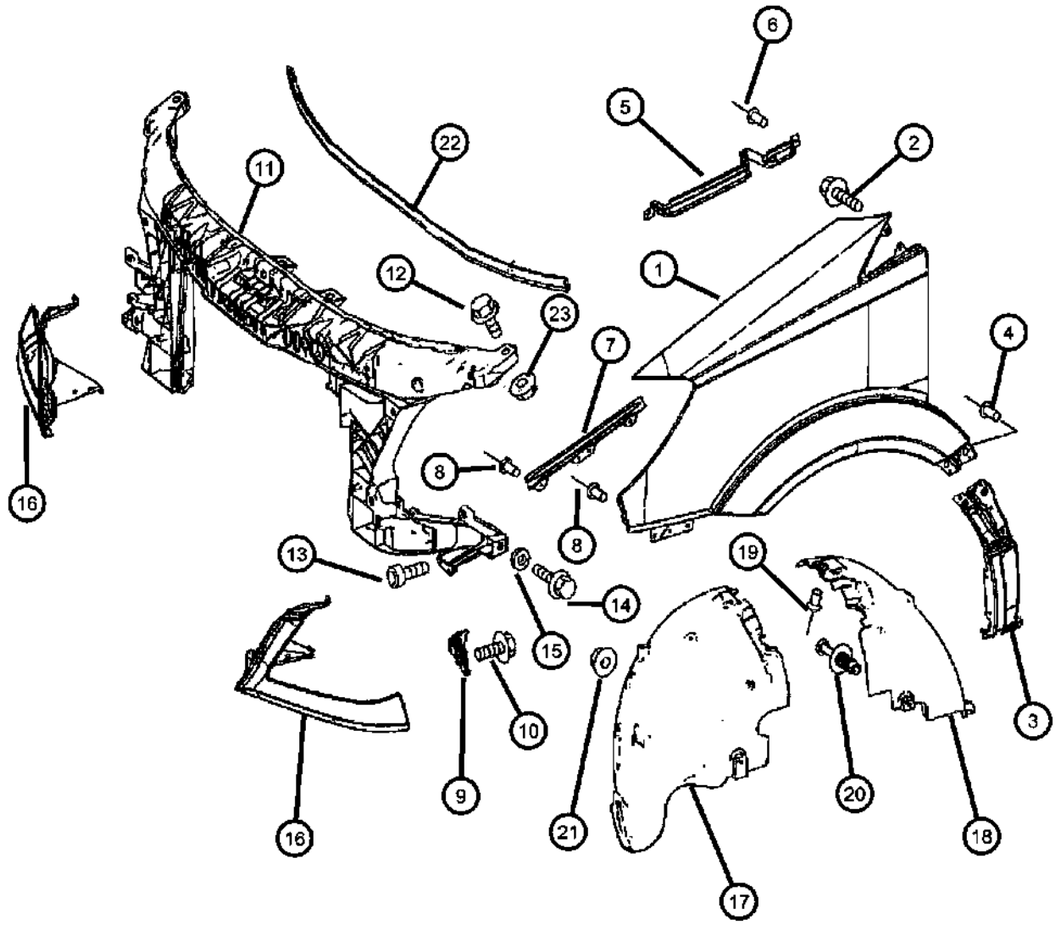

ITEM	PART NUMBER	QTY	LINE	SERIES	BODY	ENGINE	TRANS	TRIM	DESCRIPTION
		1	3, 7		03, 05				With Wiper, Right
	68005391AA	1	7, 2, 3, 6		13, 15, 17, 53, 55				Left
		1	3, 7		03, 05				Left
	68005394AA	1	2, 3, 6, 7		13, 15, 17, 53, 55				Right
		1	3, 7		03, 05				Right
17									WHEELHOUSE, Front Inner
	68014738AA	1	3, 7		03, 05				Right
		1	2, 3, 6, 7		13, 15, 17, 53, 55				Right
	68014739AA	1	3, 7		03, 05				Left
		1	2, 3, 6, 7		13, 15, 17, 53, 55				Left
18									WHEELHOUSE, Front Inner, Rear
	68014740AA	1	2, 3, 6, 7						Right
		1	3, 7		03, 05				Right
	68014741AA	1	2, 3, 6, 7						Left
		1	3, 7		03, 05				Left
19	1AR96DX9AA	8	2, 3, 6, 7		13, 15, 17, 53, 55				RIVET, Plastic, Lining of Wheelhouse
20	05166238AA	4	2, 3, 6, 7		13, 15, 17, 53, 55				RIVET, Plastic
21	06104914AA	12	2, 3, 6, 7						NUT, Plastic, Wheelhouse Lining
22	68014742AA	1	2, 3, 6, 7						SEAL, Engine Hood
23									NUT, Hex Flange Lock
	05125760AA	2	2, 3, 6, 7		13, 15, 17, 53, 55				
		2	3, 7		03, 05				

SPRINTER (VB)

SERIES	LINE	BODY	ENGINE	TRANSMISSION
L = LOWLINE	3 = HD DODGE 2WD 2 = Med. Duty DODGE 2WD	03 = CAB CHASSIS WHEEL BASE 3 05 = CAB CHASSIS WHEEL BASE 5 13 = 119 WB 53 = 119 WB 15 = VAN WHEEL BASE 5 55 = WAGON WHEEL BASE 5 17 = VAN WHEEL BASE 7	EG2 = 3.5L V6 Gas Engine EXM = 3.0L V6 Turbo Diesel Engine	DGZ = 5-Speed Auto W5A380 Transmission

AR = use ase required - = Non illustrrated part

<< RETURN TO GROUP INDEX

Inner Fender and Attaching Parts
Figure SVB-420

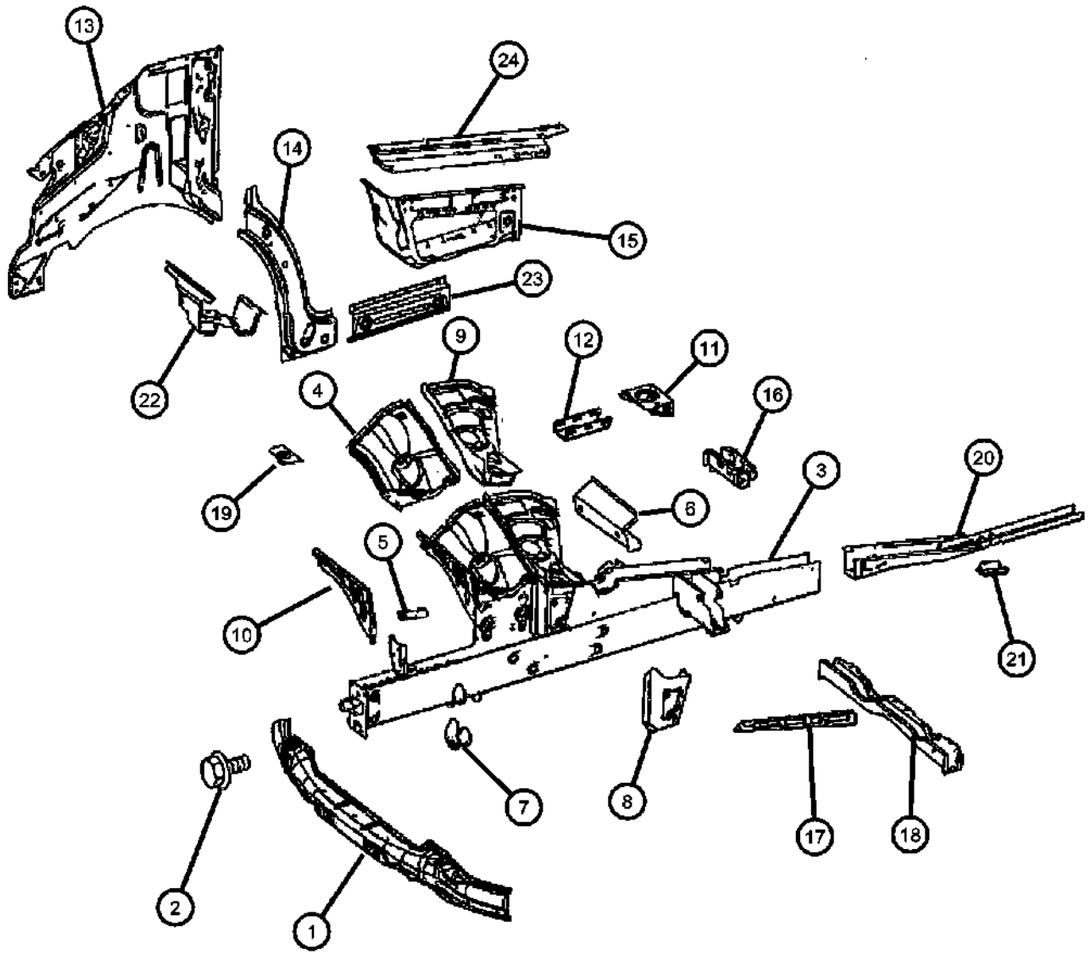

ITEM	PART NUMBER	QTY	LINE	SERIES	BODY	ENGINE	TRANS	TRIM	DESCRIPTION
1	68006349AA	1	2, 3, 6, 7						REINFORCEMENT, Front Bumper
2									SCREW
	05073723AB	6	3, 7		03, 05				
		6	2, 3, 6, 7		13, 15, 17, 53, 55				
	06104024AA	2	3, 7		03, 05				
		2	2, 3, 6, 7		13, 15, 17, 53, 55				
3									RAIL, Front Side Rail Front
	68006247AA	1	3, 7		03, 05				Left
		1	2, 3, 6, 7		13, 15, 17, 53, 55				Left
	68006284AA	1	2, 3, 6, 7						Right
4									WHEELHOUSE
	68006263AA	1	2, 3, 6, 7						Left
	68006290AA	1	2, 3, 6, 7						Right
5									BRACKET, Brake Hose
	68006265AA	1	2, 3, 6, 7						Left
	68006286AA	1	2, 3, 6, 7						Right
6	68006251AA	1	2, 3, 6, 7		13, 15, 17, 53, 55				RAIL, Front Crossmember
7									REINFORCEMENT, Front Side Rail, Jacking
	68006253AA	1	3, 7		03, 05				
		1	2, 3, 6, 7		13, 15, 17, 53, 55				
8									REINFORCEMENT, Front Side Rail
	68006257AA	1	3, 7		03, 05				Left
		1	2, 3, 6, 7		13, 15, 17, 53, 55				Left
	68006287AA	1	2, 3, 6, 7						Right
9									WHEELHOUSE
	68006261AA	1	2, 3, 6, 7						Left
	68006288AA	1	2, 3, 6, 7						Right
10									REINFORCEMENT, Front Side Rail

SPRINTER (VB)

SERIES	LINE	BODY	ENGINE	TRANSMISSION
L = LOWLINE	3 = HD DODGE 2WD 2 = Med. Duty DODGE 2WD	03 = CAB CHASSIS WHEEL BASE 3 05 = CAB CHASSIS WHEEL BASE 5 13 = 119 WB 53 = 119 WB 15 = VAN WHEEL BASE 5 55 = WAGON WHEEL BASE 5 17 = VAN WHEEL BASE 7	EG2 = 3.5L V6 Gas Engine EXM = 3.0L V6 Turbo Diesel Engine	DGZ = 5-Speed Auto W5A380 Transmission

Inner Fender and Attaching Parts
Figure SVB-420

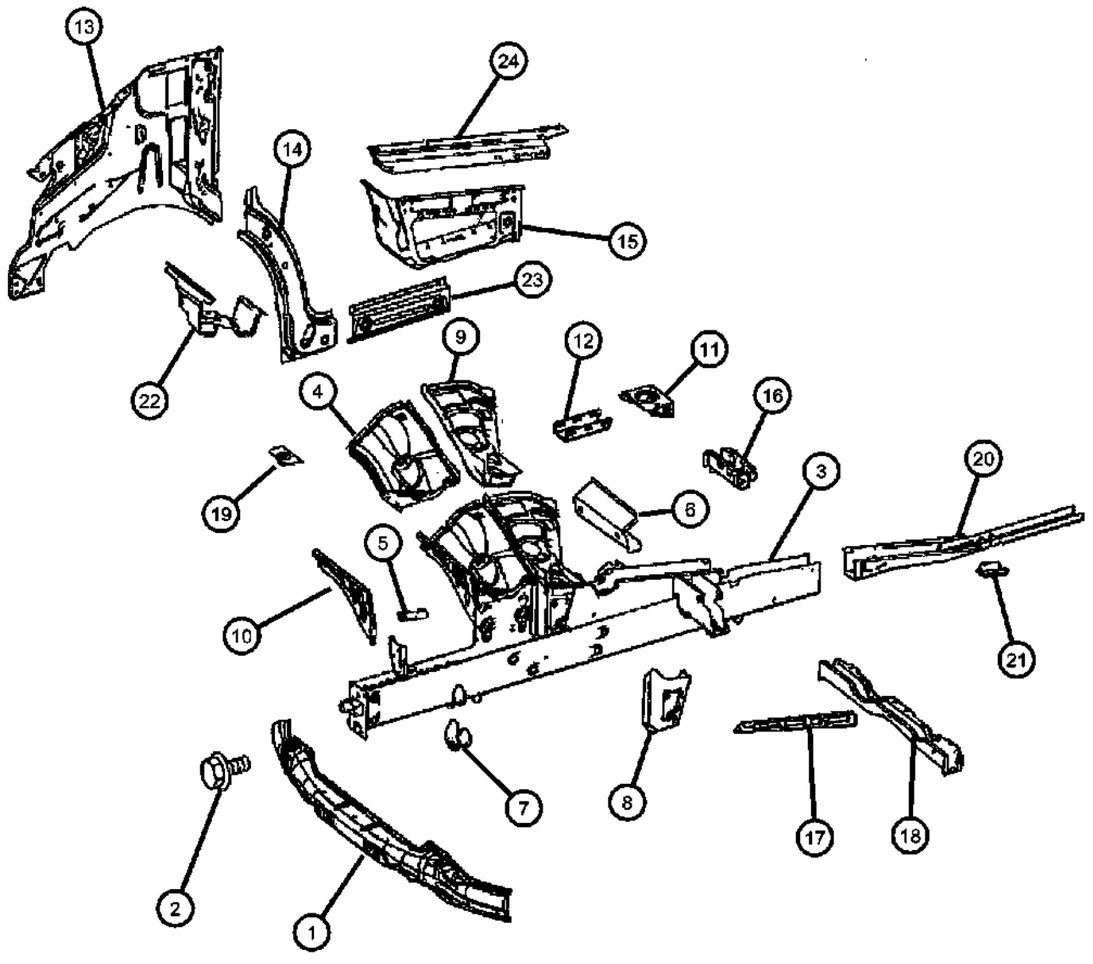

ITEM	PART NUMBER	QTY	LINE	SERIES	BODY	ENGINE	TRANS	TRIM	DESCRIPTION
	68006262AA	1	3, 7		03, 05				Left
		1	2, 3, 6, 7		13, 15, 17, 53, 55				Left
	68006289AA	1	2, 3, 6, 7						Right
11	68006298AA	1	2, 3, 6, 7						BRACKET, Exhaust
12	68006278AA	2	2, 3, 6, 7						REINFORCEMENT, Front Side Rail
13									PANEL, Fender
	68006280AA	1	2, 3, 6, 7						Left
	68006300AA	1	2, 3, 6, 7						Right
14									PANEL, Body Side Aperture
	68006328AA	1	2, 3, 6, 7						Left
	68006330AA	1	2, 3, 6, 7						Right
15									STEP PAD, Side Step
	68006332AA	1	2, 3, 6, 7						Left
	68006333AA	1	2, 3, 6, 7						Right
16									SUPPORT
	68006343AA	1	2, 3, 6, 7						Left
	68006345AA	1	2, 3, 6, 7						Right
17	68006320AA	1	2, 3, 6, 7						REINFORCEMENT
18	68006334AA	1	2, 3, 6, 7						CROSSMEMBER, Front Floor
19	68006337AA	3	2, 3, 6, 7						REINFORCEMENT
20	68006339AA	2	2, 3, 6, 7						REINFORCEMENT, Front Side Rail
21	05129604AA	1	2, 3, 6, 7						BRACKET, Wiring
22	68006347AA	1	2, 3, 6, 7						BRACKET, Jack
23									PANEL, Body Side Aperture
	68006329AA	1	2, 3, 6, 7						Left
	68006331AA	1	2, 3, 6, 7						Right
24									REINFORCEMENT
	68006341AA	1	2, 3, 6, 7						Left
	68006342AA	1	2, 3, 6, 7						Right

SPRINTER (VB)

SERIES	LINE	BODY	ENGINE	TRANSMISSION
L = LOWLINE	3 = HD DODGE 2WD 2 = Med. Duty DODGE 2WD	03 = CAB CHASSIS WHEEL BASE 3 05 = CAB CHASSIS WHEEL BASE 5 13 = 119 WB 53 = 119 WB 15 = VAN WHEEL BASE 5 55 = WAGON WHEEL BASE 5 17 = VAN WHEEL BASE 7	EG2 = 3.5L V6 Gas Engine EXM = 3.0L V6 Turbo Diesel Engine	DGZ = 5-Speed Auto W5A380 Transmission

Hood
Figure SVB-510

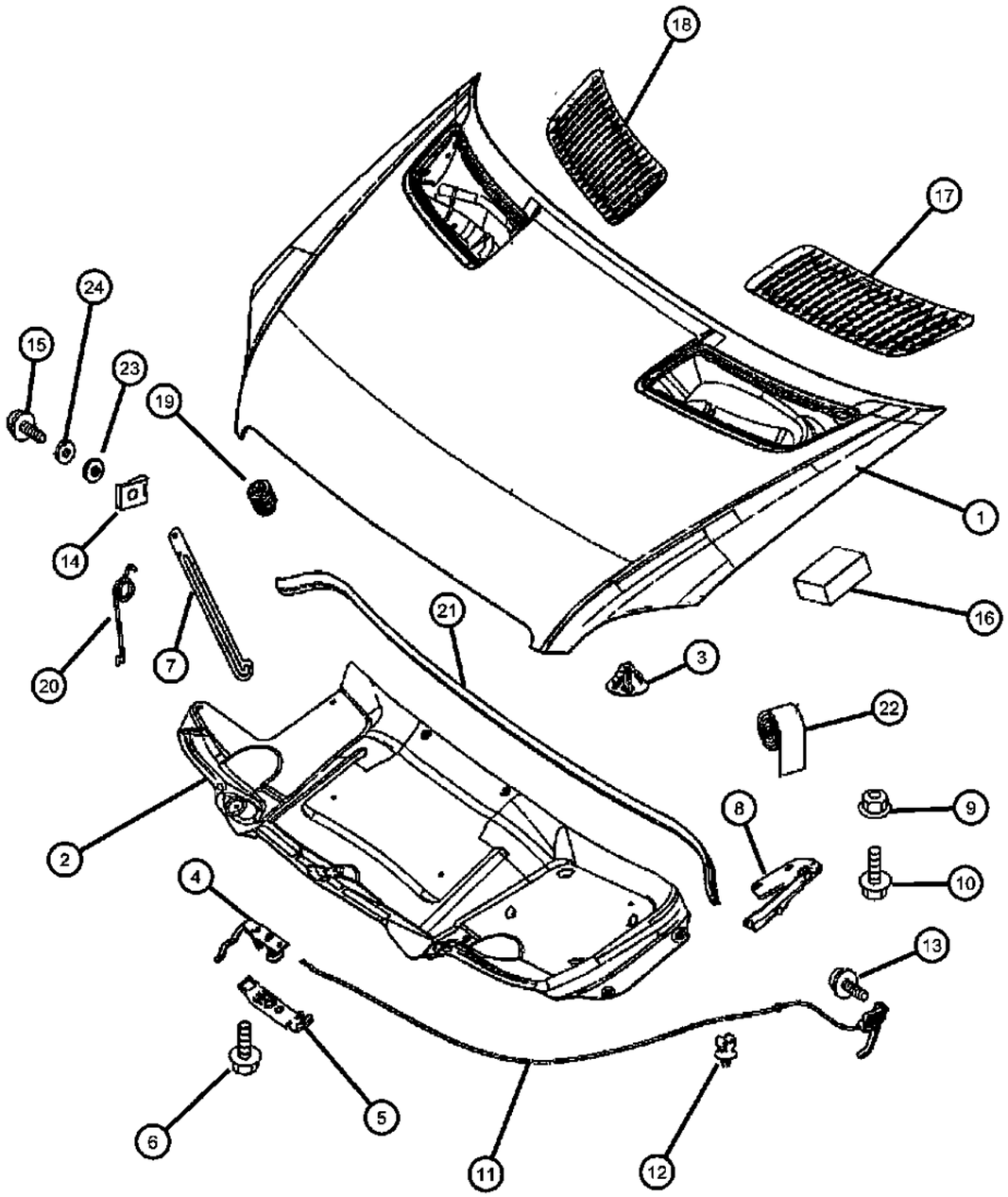

ITEM	PART NUMBER	QTY	LINE	SERIES	BODY	ENGINE	TRANS	TRIM	DESCRIPTION
1	68009834AA	1	2, 3, 6, 7						HOOD
2	68009866AA	1	2, 3, 6, 7						INSULATION, Hood
3									RIVET
	68009867AA	12	3, 7		03, 05				
		12	2, 3, 6, 7		13, 15, 17, 53, 55				
4									LATCH, Hood
	68009851AA	1	2, 3, 6, 7		13, 15, 17, 53, 55				
		1	3, 7		03, 05				
5									LATCH, Hood
	68009852AA	1	2, 3, 6, 7		13, 15, 17, 53, 55				
		1	3, 7		03, 05				
6									BOLT
	06104124AA	2	2, 3, 6, 7		13, 15, 17, 53, 55				
		2	3, 7		05, 03				
7	68009856AA	1	2, 3, 6, 7						PROP, Hood
8									HINGE, Hood
	68009848AA	1	2, 3, 6, 7		13, 15, 17, 53, 55				Left
		1	3, 7		03, 05				Left
	68009849AA	1	2, 3, 6, 7		13, 15, 17, 53, 55				Right
		1	3, 7		03, 05				Right
9									NUT
	06105169AA	2	3, 7		03, 05				
		2	2, 3, 6, 7		13, 15, 17, 53, 55				
10									SCREW
	06104153AC	2	2, 3, 6, 7		13, 15, 17, 53, 55				
		2	3, 7		05, 03				
11									CABLE, Hood Release
	68009853AA	1	2, 3, 6, 7		13, 15, 17, 53, 55				

SPRINTER (VB)

SERIES	LINE	BODY	ENGINE	TRANSMISSION
L = LOWLINE	3 = HD DODGE 2WD 2 = Med. Duty DODGE 2WD	03 = CAB CHASSIS WHEEL BASE 3 05 = CAB CHASSIS WHEEL BASE 5 13 = 119 WB 53 = 119 WB 15 = VAN WHEEL BASE 5 55 = WAGON WHEEL BASE 5 17 = VAN WHEEL BASE 7	EG2 = 3.5L V6 Gas Engine EXM = 3.0L V6 Turbo Diesel Engine	DGZ = 5-Speed Auto W5A380 Transmission

Hood
Figure SVB-510

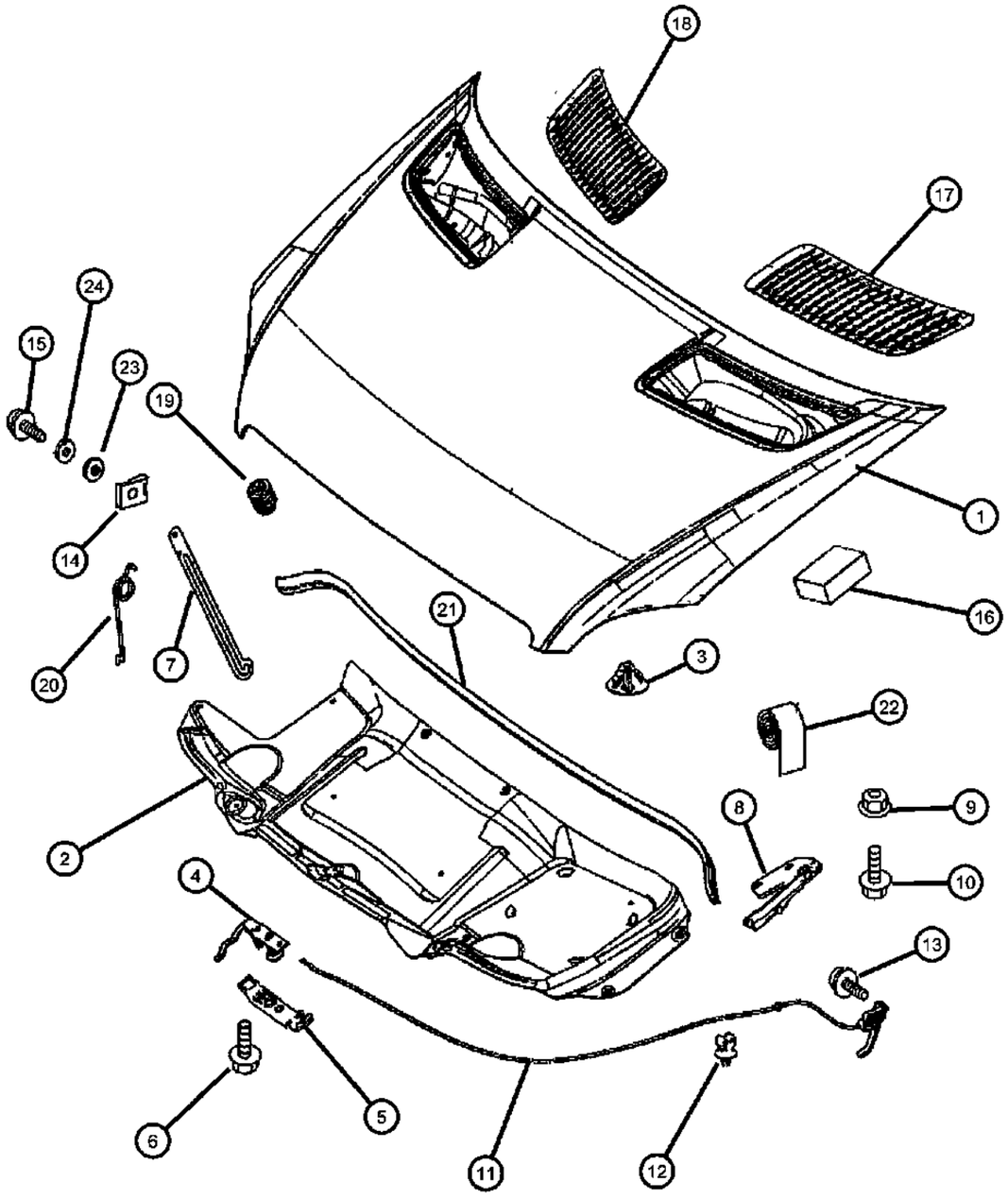

ITEM	PART NUMBER	QTY	LINE	SERIES	BODY	ENGINE	TRANS	TRIM	DESCRIPTION
		1	3, 7		03, 05				
12	68009854AA	1	2, 3, 6, 7						RETAINER
13	06104666AA	2	2, 3, 6, 7						SCREW
14	05126111AA	1	2, 3, 6, 7						CLIP, Hood
15	06104666AA	1	2, 3, 6, 7		13, 15, 17, 53, 55				SCREW
16									INSULATOR
	68014291AA	1	2, 3, 6, 7		13, 15, 17, 53, 55				
		1	3, 7		03, 05				
17	1GY46DX9AA	1	2, 3, 6, 7						GRILLE, HoodLeft
18	1GY47DX9AA	1	2, 3, 6, 7						GRILLE, HoodRight
19	68009862AA	4	2, 3, 6, 7						BUMPER, Hood
20									SPRING
	05104546AA	1	2, 3, 6, 7		13, 15, 17, 53, 55				
		1	3, 7		03, 05				
21	68009861AA	1	2, 3, 6, 7						SEAL, Hood
22	68009864AA	AR	2, 3, 6, 7						TAPE
23	68009864AA	AR							BUSHING, (NOT SERVICED)
24	68009860AA	2	2, 3, 6, 7						WASHER
-25	68018131AA	1	2, 3, 6, 7						WASHER

SPRINTER (VB)

SERIES	LINE	BODY	ENGINE	TRANSMISSION
L = LOWLINE	3 = HD DODGE 2WD 2 = Med. Duty DODGE 2WD	03 = CAB CHASSIS WHEEL BASE 3 05 = CAB CHASSIS WHEEL BASE 5 13 = 119 WB 53 = 119 WB 15 = VAN WHEEL BASE 5 55 = WAGON WHEEL BASE 5 17 = VAN WHEEL BASE 7	EG2 = 3.5L V6 Gas Engine EXM = 3.0L V6 Turbo Diesel Engine	DGZ = 5-Speed Auto W5A380 Transmission

AR = use ase required - = Non illustrrated part

<< RETURN TO GROUP INDEX

Cowl Panel
Figure SVB-610

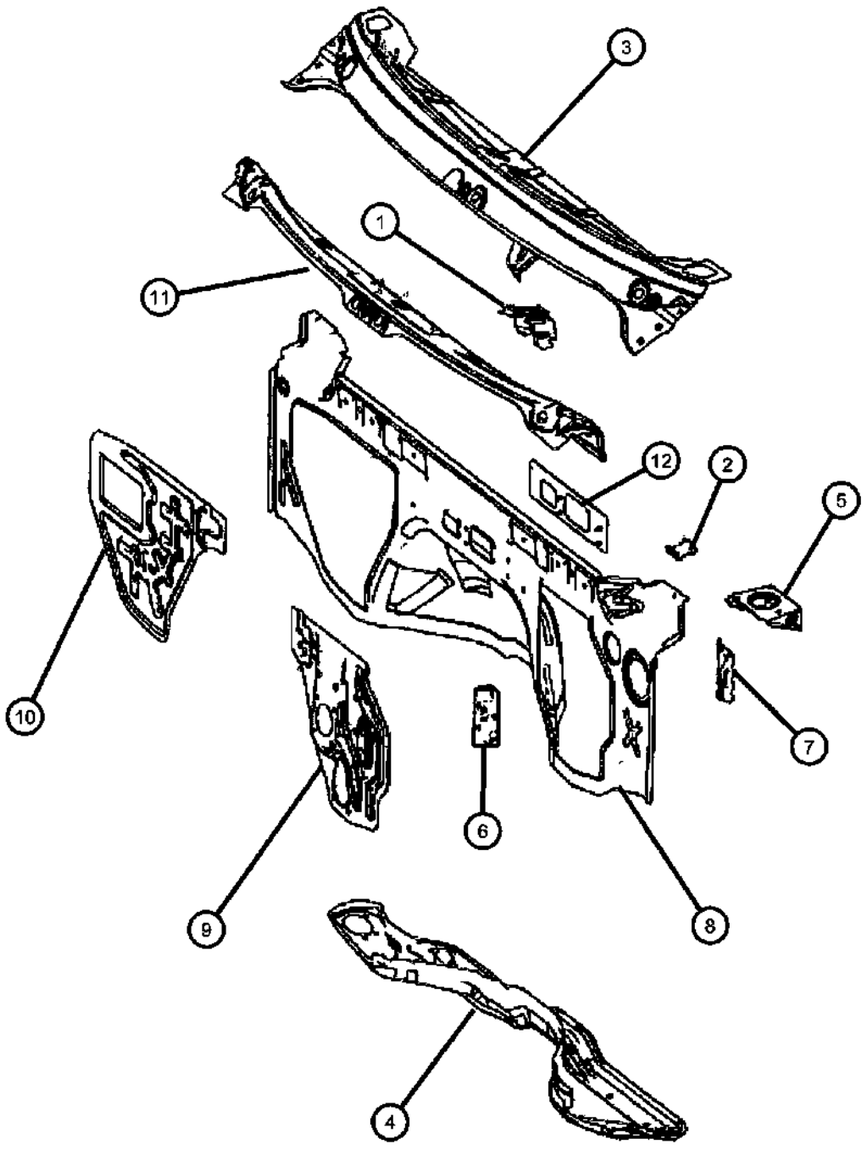

ITEM	PART NUMBER	QTY	LINE	SERIES	BODY	ENGINE	TRANS	TRIM	DESCRIPTION
1	68006310AA	1	2, 3, 6, 7						BRACKET, Cowl Top
2	68006311AA	4	2, 3, 6, 7						REINFORCEMENT
3	68006316AA	1	2, 3, 6, 7						PANEL, Cowl Top
4	68006322AA	1	2, 3, 6, 7						PANEL, Dash
5	68006323AA	1	2, 3, 6, 7						BRACKET, Sensor
6	68006325AA	2	2, 3, 6, 7						BRACKET
7	68006326AA	1	2, 3, 6, 7						BRACKET, Pedal
8	68006306AA	1	2, 3, 6, 7						PANEL, Dash
9	68006304AA	1	2, 3, 6, 7						PANEL, DashLower
10	68006307AA	1	2, 3, 6, 7						PANEL, Dash
11	68006309AA	1	2, 3, 6, 7						PANEL, Cowl Top
12	68006314AA	1	2, 3, 6, 7						PLATE

SPRINTER (VB)

SERIES	LINE	BODY	ENGINE	TRANSMISSION
L = LOWLINE	3 = HD DODGE 2WD 2 = Med. Duty DODGE 2WD	03 = CAB CHASSIS WHEEL BASE 3 05 = CAB CHASSIS WHEEL BASE 5 13 = 119 WB 53 = 119 WB 15 = VAN WHEEL BASE 5 55 = WAGON WHEEL BASE 5 17 = VAN WHEEL BASE 7	EG2 = 3.5L V6 Gas Engine EXM = 3.0L V6 Turbo Diesel Engine	DGZ = 5-Speed Auto W5A380 Transmission

Insturment Panel Lining
Figure SVB-620

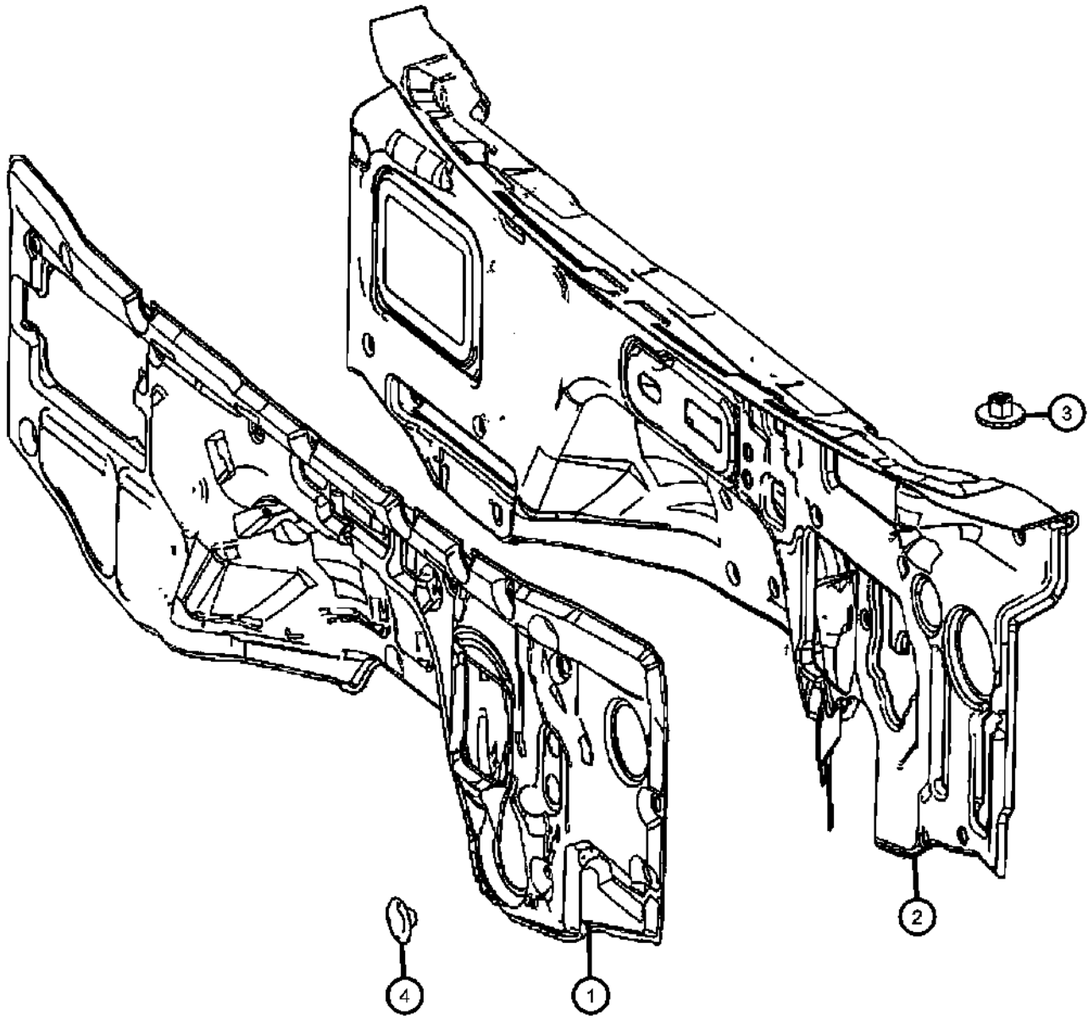

ITEM	PART NUMBER	QTY	LINE	SERIES	BODY	ENGINE	TRANS	TRIM	DESCRIPTION
1	68004961AA	1	2, 3, 6, 7						SILENCER, Dash Panel, Fire Wall
2	68006367AA	1	2, 3, 6, 7						SILENCER, Dash Panel, Fire Wall
3									SNAP
	05097042AA	11	3, 7		03, 05				
		11	2, 3, 6, 7		13, 15, 17, 53, 55				
4									PLUG, Button
	05097041AA	7	2, 3, 6, 7		13, 15, 17, 53, 55				
		7	3, 7		03, 05				

SPRINTER (VB)

SERIES	LINE	BODY	ENGINE	TRANSMISSION
L = LOWLINE	3 = HD DODGE 2WD 2 = Med. Duty DODGE 2WD	03 = CAB CHASSIS WHEEL BASE 3 05 = CAB CHASSIS WHEEL BASE 5 13 = 119 WB 53 = 119 WB 15 = VAN WHEEL BASE 5 55 = WAGON WHEEL BASE 5 17 = VAN WHEEL BASE 7	EG2 = 3.5L V6 Gas Engine EXM = 3.0L V6 Turbo Diesel Engine	DGZ = 5-Speed Auto W5A380 Transmission

Instrument Panel Lining, Inner
Figure SVB-625

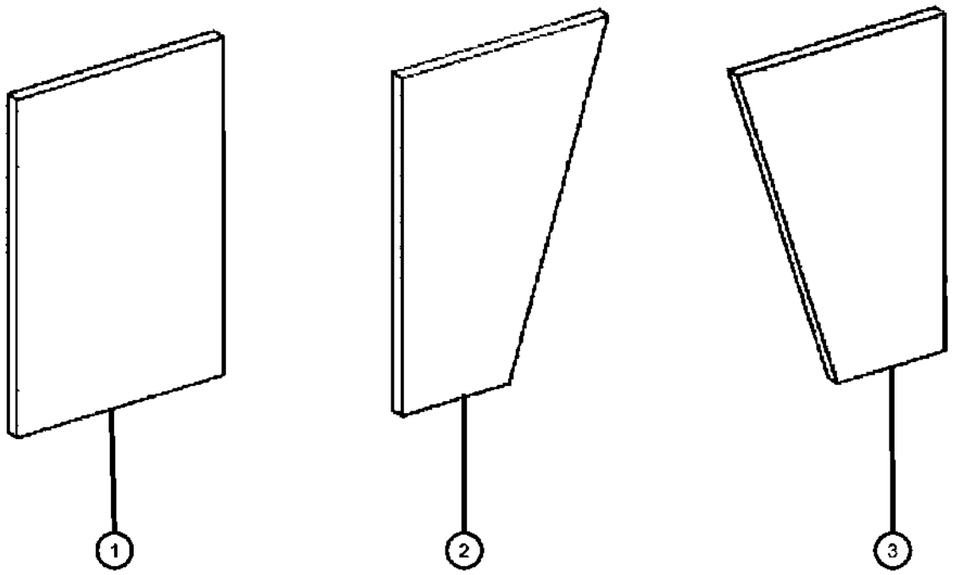

ITEM	PART NUMBER	QTY	LINE	SERIES	BODY	ENGINE	TRANS	TRIM	DESCRIPTION
1									INSULATION
	68010358AA	4	2, 3, 6, 7		15, 55				
		6	2, 3, 6, 7		17				
		3	3, 6, 7, 2		13, 53				
2	68014724AA	1	2, 3, 6, 7		13, 15, 17, 53, 55				INSULATOR
3	68014726AA	1	2, 3, 6, 7		13, 15, 17, 53, 55				INSULATION

SPRINTER (VB)

SERIES	LINE	BODY	ENGINE	TRANSMISSION
L = LOWLINE	3 = HD DODGE 2WD 2 = Med. Duty DODGE 2WD	03 = CAB CHASSIS WHEEL BASE 3 05 = CAB CHASSIS WHEEL BASE 5 13 = 119 WB 53 = 119 WB 15 = VAN WHEEL BASE 5 55 = WAGON WHEEL BASE 5 17 = VAN WHEEL BASE 7	EG2 = 3.5L V6 Gas Engine EXM = 3.0L V6 Turbo Diesel Engine	DGZ = 5-Speed Auto W5A380 Transmission

Passenger Compartment Damping
Figure SVB-630

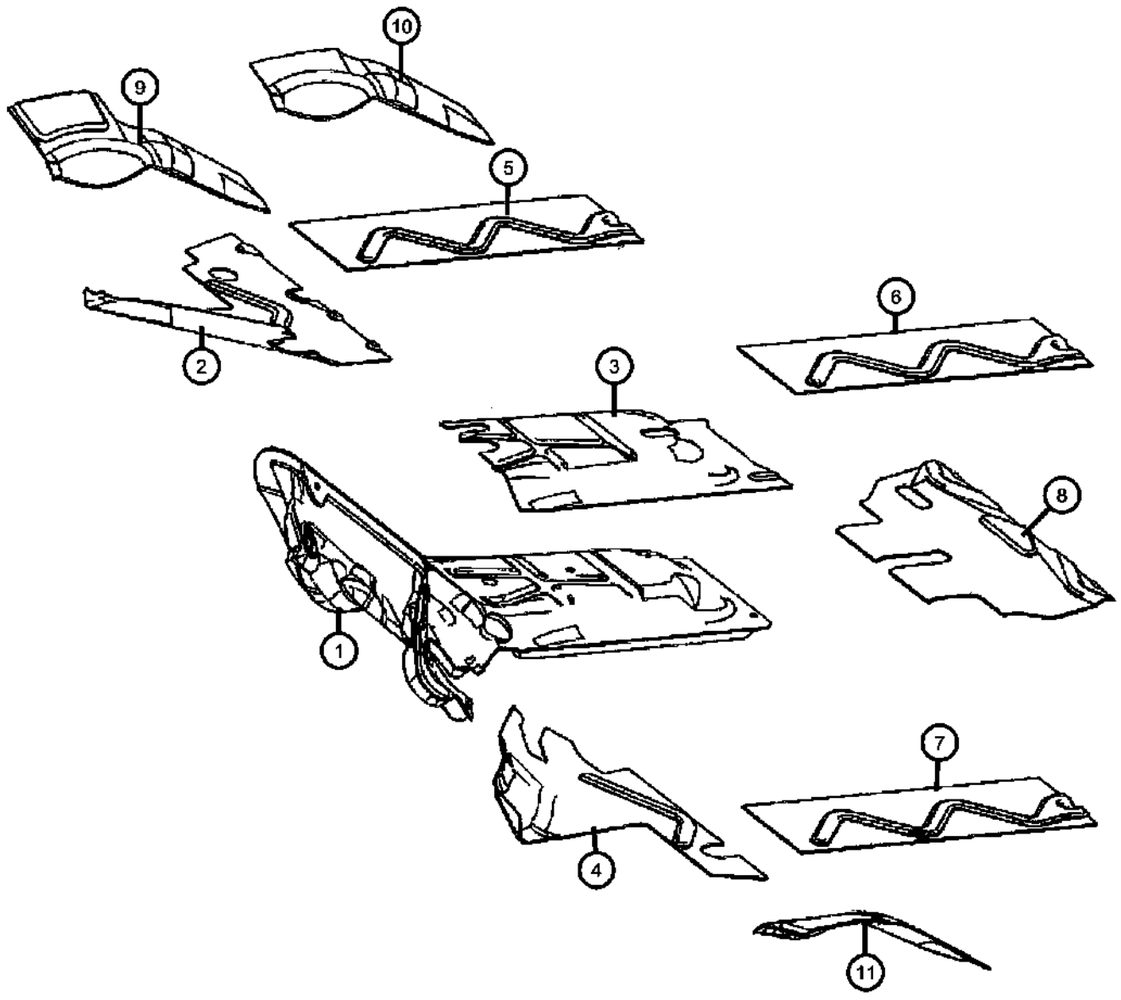

ITEM	PART NUMBER	QTY	LINE	SERIES	BODY	ENGINE	TRANS	TRIM	DESCRIPTION
1	68006365AA	1	2, 3, 6, 7						INSULATION, Transmission Tunnel
2									INSULATION
	68006372AA	1	3, 6, 7, 2						Front Right
	68006379AA	1	2, 3, 6, 7						Right Inside
3	68006373AA	1	2, 3, 6, 7						INSULATION, Front Central
4									INSULATION
	68006378AA	1	2, 3, 6, 7						Left Inside
	68006371AA	1	2, 3, 6, 7						Front Left
5	68006370AA	1	2, 3, 6, 7						INSULATION, Left Entrance-Cut to Fit
6	68006370AA	1	2, 3, 6, 7						INSULATION, Central Right-Cut to Fit
7	68006370AA	1	2, 3, 6, 7						INSULATION, Left-Cut to Fit
8	68006368AA	1	2, 3, 6, 7		13, 15, 17, 53, 55				INSULATION, Rear
9	68006375AA	1	2, 3, 6, 7						INSULATION, Right Outside
10	68006377AA	1	2, 3, 6, 7						INSULATION, Right Outside
11	68006376AA	1	2, 3, 6, 7						INSULATION, Left Outside

SPRINTER (VB)

SERIES	LINE	BODY	ENGINE	TRANSMISSION
L = LOWLINE	3 = HD DODGE 2WD 2 = Med. Duty DODGE 2WD	03 = CAB CHASSIS WHEEL BASE 3 05 = CAB CHASSIS WHEEL BASE 5 13 = 119 WB 53 = 119 WB 15 = VAN WHEEL BASE 5 55 = WAGON WHEEL BASE 5 17 = VAN WHEEL BASE 7	EG2 = 3.5L V6 Gas Engine EXM = 3.0L V6 Turbo Diesel Engine	DGZ = 5-Speed Auto W5A380 Transmission

Floor Mats,Entry,Load and Passenger Compartment
Figure SVB-640

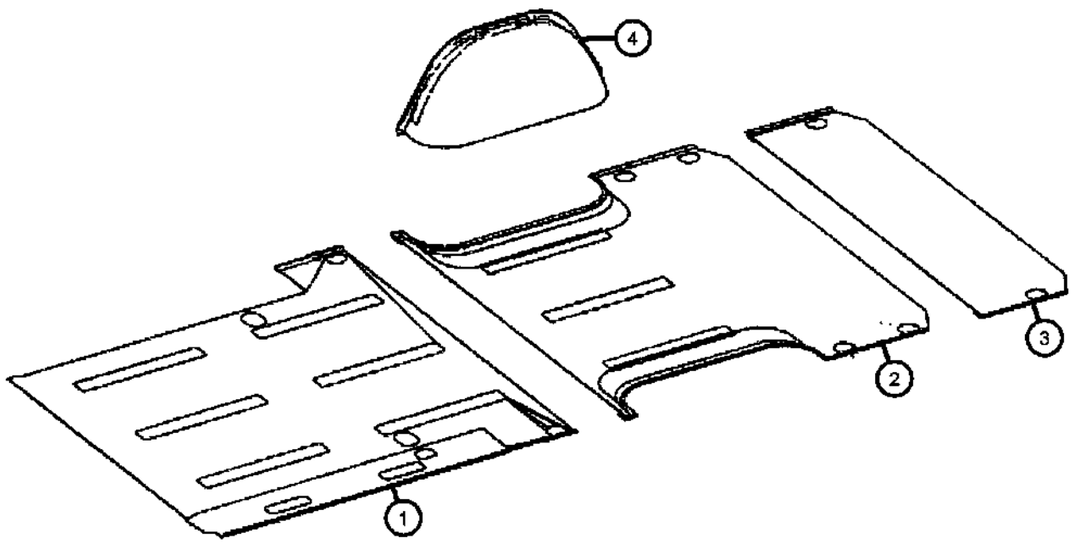

ITEM	PART NUMBER	QTY	LINE	SERIES	BODY	ENGINE	TRANS	TRIM	DESCRIPTION
1									MAT, Front Floor, Rubber
	68010589AA	1	2, 3, 6, 7		13, 15, 17				Central-[CKZ+GK9]
	68010590AA	1	2, 3, 6, 7		13, 15, 17, 53, 55				Central-[CKZ]
2									MAT, Floor
	68010595AA	1	2, 3, 6, 7		17				Rear
	68010594AA	1	2, 3, 6, 7		13, 53				Rear
3	68010591AA	1	2, 3, 6, 7		15, 17, 55				MAT, FloorRear
4	1JA24NCVAA	2	3, 7		13, 15, 17				MAT, WheelhouseRight or Left

SPRINTER (VB)

SERIES	LINE	BODY	ENGINE	TRANSMISSION
L = LOWLINE	3 = HD DODGE 2WD 2 = Med. Duty DODGE 2WD	03 = CAB CHASSIS WHEEL BASE 3 05 = CAB CHASSIS WHEEL BASE 5 13 = 119 WB 53 = 119 WB 15 = VAN WHEEL BASE 5 55 = WAGON WHEEL BASE 5 17 = VAN WHEEL BASE 7	EG2 = 3.5L V6 Gas Engine EXM = 3.0L V6 Turbo Diesel Engine	DGZ = 5-Speed Auto W5A380 Transmission

Windshield & Rear Glass / Cab Chassis
Figure SVB-705

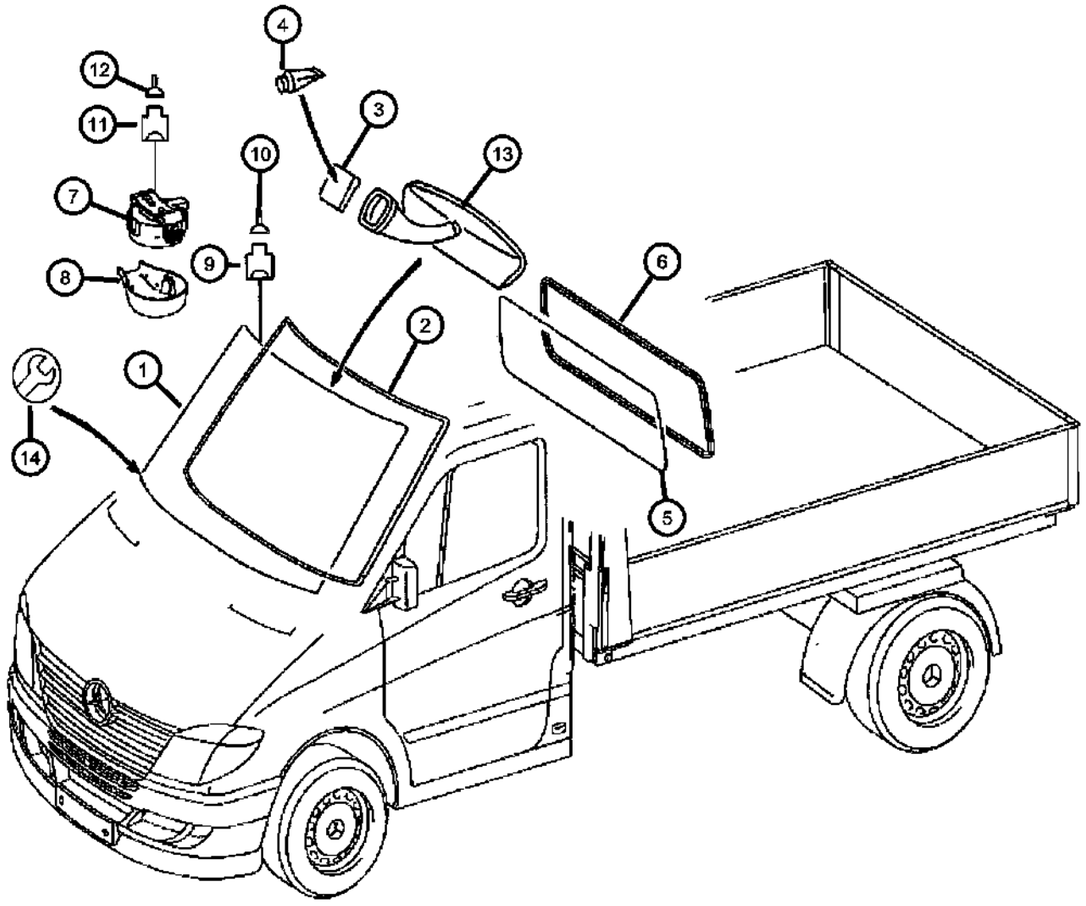

ITEM	PART NUMBER	QTY	LINE	SERIES	BODY	ENGINE	TRANS	TRIM	DESCRIPTION
1									WINDSHIELD
	68018758AA	1	2, 3, 6, 7						With [GBG + NHW]
	68018759AA	1	2, 3, 6, 7						With [GBE + NHW]
	68018760AA	1	2, 3, 6, 7						With [GBE]
2	68018762AA	1	2, 3, 6, 7						SEAL, Windshield
3	05104241AA	1	3, 7		03, 05				BUTTON, Rear View Mirror
4	05125662AB	1	2, 3, 6, 7						ADHESIVE
5									GLASS, Backlite, Fixed
	05104249AA	1	3, 7		03, 05				With [GEV]
	05122357AA	1	3, 7		03, 05				With [GEV+GBE]
6									WEATHERSTRIP
	05104250AA	1	3, 7		03, 05				With [GEV]
	05104251AA	1	3, 7		03, 05				With [GEV+CBJ]
7	68013389AA	1	2, 3, 6, 7						SENSOR, Rain, With [NHW]
8	68013425AA	1	2, 3, 6, 7						COVER, With [NHW]
9									CONNECTOR
	68011379AA	1	2, 3, 6, 7						[1 Pin / R22/2] With [NHW]
		1	2, 3, 6, 7						[1 Pin / R22/2] With [NHW+GBG]
10	05133379AA	1	3, 7		03, 05				TERMINAL, Male, [6.0 MM2; R22/2]
11	05120717AA	1	3, 7		03, 05				CONNECTOR, Rain & Light Sensor [3 Pin / B38/2]
12	05103873AA	3	3, 7		03, 05				TERMINAL, [0.75 MM2; MQS; B38/2]
13									MIRROR, Inside Rear View
	05104435AA	1	2, 3, 6, 7						With [GNA] Without [NHW]
	68017272AA	1	2, 3, 6, 7						With [GNA + NHW]
14	05104594AA	1	3, 7		03, 05				REPAIR KIT, Windshield

SPRINTER (VB)

SERIES	LINE	BODY	ENGINE	TRANSMISSION
L = LOWLINE	3 = HD DODGE 2WD 2 = Med. Duty DODGE 2WD	03 = CAB CHASSIS WHEEL BASE 3 05 = CAB CHASSIS WHEEL BASE 5 13 = 119 WB 53 = 119 WB 15 = VAN WHEEL BASE 5 55 = WAGON WHEEL BASE 5 17 = VAN WHEEL BASE 7	EG2 = 3.5L V6 Gas Engine EXM = 3.0L V6 Turbo Diesel Engine	DGZ = 5-Speed Auto W5A380 Transmission

Windshield, Partition & Roof Glass / Cargo Van
Figure SVB-710

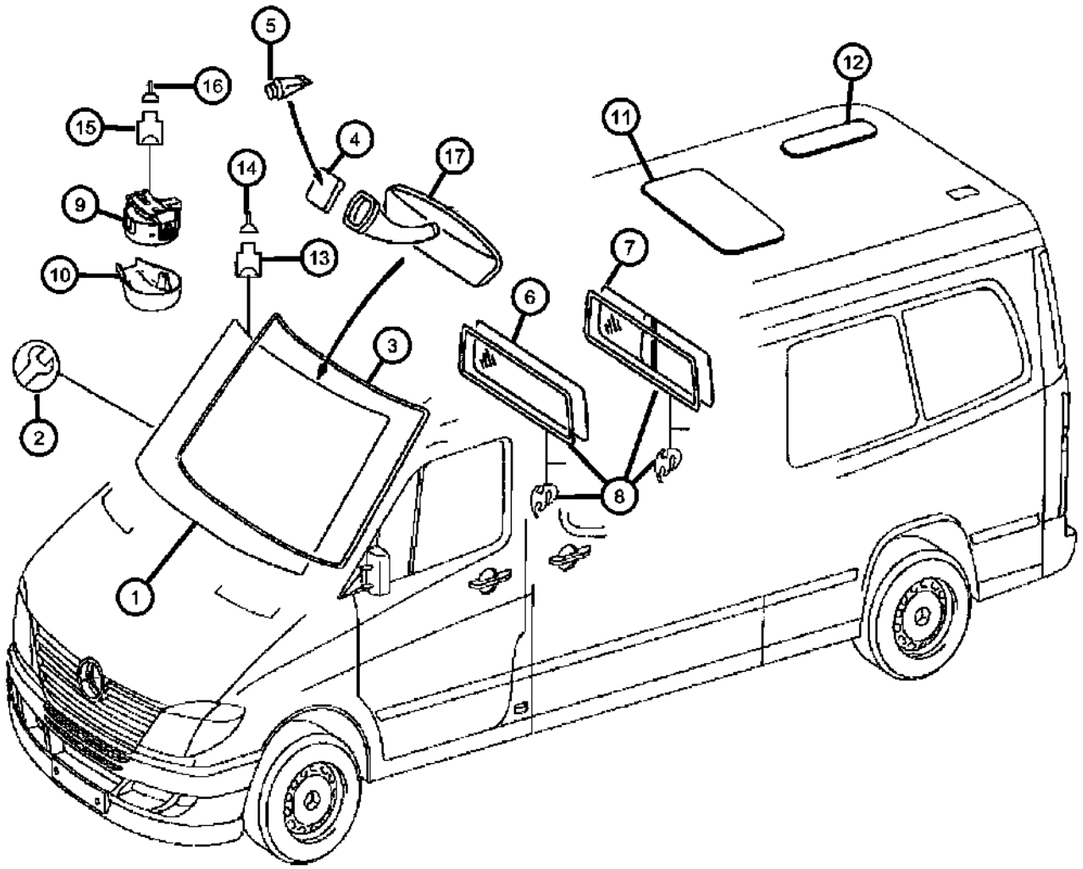

ITEM	PART NUMBER	QTY	LINE	SERIES	BODY	ENGINE	TRANS	TRIM	DESCRIPTION
NOTE:This Is The Rear Cargo Fixed Glass. This Is Not The Power Sun Roof Replacement Glass.									
1									WINDSHIELD
	68018758AA	1	2, 3, 6, 7						With [GBG + NHW]
	68018759AA	1	2, 3, 6, 7						With [GBE + NHW]
	68018760AA	1	2, 3, 6, 7						With [GBE] And Or [GBB]
2	05104594AA	1	2, 3, 6, 7		13, 15, 17, 53, 55				REPAIR KIT, Windshield
3	68018762AA	1	2, 3, 6, 7						SEAL, Windshield
4	05104241AA	1	3, 6, 7, 2		13, 15, 17, 53, 55				BUTTON, Rear View Mirror
5	05125662AB	1	2, 3, 6, 7						ADHESIVE
6	05104249AA	1	2, 3, 6, 7		13, 15, 17				GLASS, Backlite, Fixed
7	05104236AA	1	2, 3, 6, 7		13, 15, 17				GLASS, Backlite, Sliding
8									WEATHERSTRIP
	05104250AA	1	2, 3, 6, 7		13, 15, 17				Fixed Rear Glass
	05104251AA	1	2, 3, 6, 7		13, 15, 17				Sliding Rear Glass
9	68013389AA	1	2, 3, 6, 7						SENSOR, Rain, With [NHW]
10	68013425AA	1	2, 3, 6, 7						COVER, With [NHM]
11	68018824AA	2	2, 3, 6, 7		13, 15, 17				GLASS, Sunroof, See NOTE: Fixed Rear Cargo Roof Glass, With [GFW] Without [MX2]
12	68018825AA	2	2, 3, 6, 7		15, 17				GLASS, Sunroof, See NOTE: Fixed Rear Cargo Roof Glass, With [GFW + MWJ]
13									CONNECTOR
	68011379AA	1	2, 3, 6, 7						[1 Pin; R22/2] With [NHW+GBG]
		1	3, 2, 6, 7						[1 Pin; R22/2] With [NHW]
14	05133379AA	1	2, 3, 6, 7		13, 15, 17, 53, 55				TERMINAL, Male, [6.0 MM2; R22/2] With [NHW]
15	05120717AA	1	2, 3, 6, 7		13, 15, 17, 53, 55				CONNECTOR
16	05103873AA	AR	2, 3, 6, 7						TERMINAL, [0.75 MM2; MQS; B38/2]
17									MIRROR, Inside Rear View
	05104435AA	1	2, 3, 6, 7						With [GNA] Without [NHW]
	68017272AA	1	2, 3, 6, 7						With [GNA + NHW]

SPRINTER (VB)

SERIES	LINE	BODY	ENGINE	TRANSMISSION
L = LOWLINE	3 = HD DODGE 2WD 2 = Med. Duty DODGE 2WD	03 = CAB CHASSIS WHEEL BASE 3 05 = CAB CHASSIS WHEEL BASE 5 13 = 119 WB 53 = 119 WB 15 = VAN WHEEL BASE 5 55 = WAGON WHEEL BASE 5 17 = VAN WHEEL BASE 7	EG2 = 3.5L V6 Gas Engine EXM = 3.0L V6 Turbo Diesel Engine	DGZ = 5-Speed Auto W5A380 Transmission

Windshield / Passenger Van
Figure SVB-715

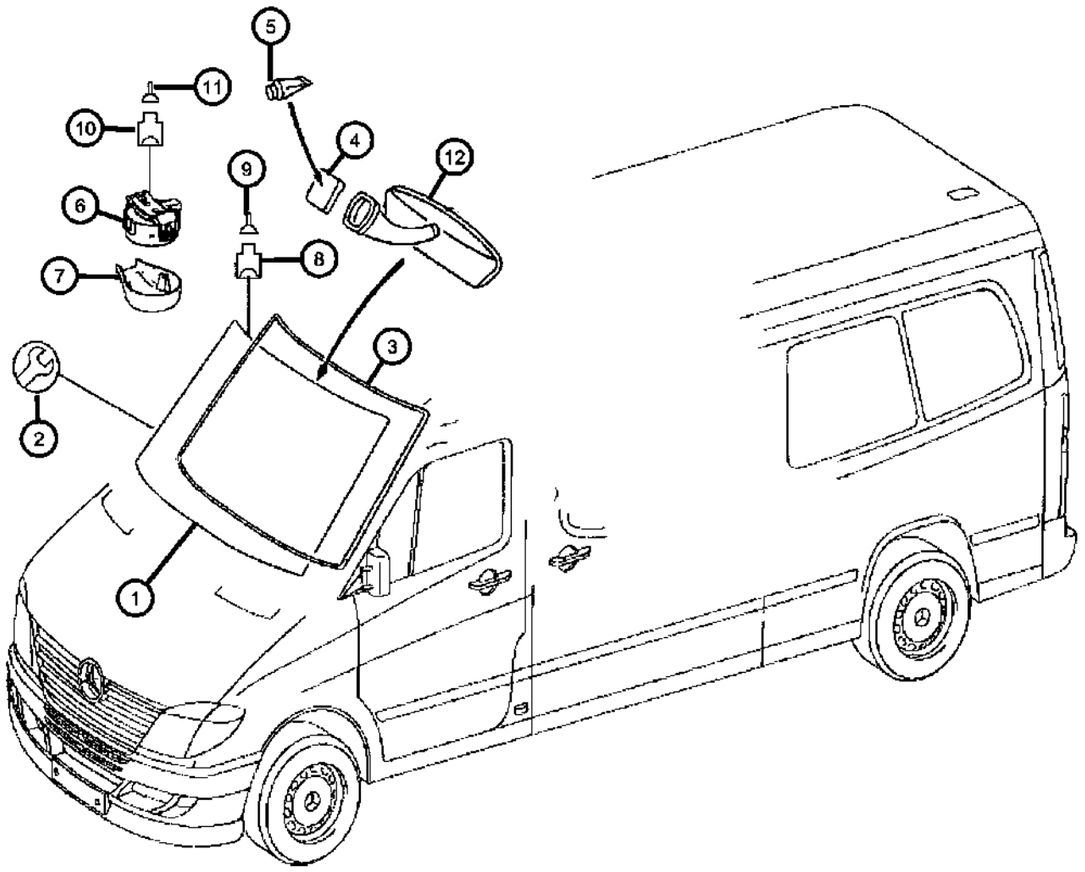

ITEM	PART NUMBER	QTY	LINE	SERIES	BODY	ENGINE	TRANS	TRIM	DESCRIPTION
1									WINDSHIELD
	68018758AA	1	2, 3, 6, 7						With [GBG + NHW]
	68018759AA	1	2, 3, 6, 7						With [GBE + NHW]
	68018760AA	1	2, 3, 6, 7						With [GBE]
2	05104594AA	1	2, 3, 6, 7		13, 15, 17, 53, 55				REPAIR KIT, Windshield
3	68018762AA	1	2, 3, 6, 7						SEAL, Windshield
4	05104241AA	1	2, 3, 6, 7		13, 15, 17, 53, 55				BUTTON, Rear View Mirror
5	05125662AB	1	2, 3, 6, 7						ADHESIVE
6	68013389AA	1	2, 3, 6, 7						SENSOR, Rain, With [NHW]
7	68013425AA	1	2, 3, 6, 7						COVER, With [NHM]
8									CONNECTOR
	68011379AA	1	2, 3, 6, 7						[1 Pin; R22/2] With [NHW+GBG]
		1	2, 3, 6, 7						[1 Pin; R22/2] With [NHW]
9	05133379AA	1	2, 3, 6, 7		13, 15, 17, 53, 55				TERMINAL, Male, [6.0 MM2; R22/2] With [NHW]
10	05120717AA	1	2, 3, 6, 7		13, 15, 17, 53, 55				CONNECTOR
11	05103873AA	AR	2, 3, 6, 7						TERMINAL, [0.75 MM2; MQS; B38/2]
12									MIRROR, Inside Rear View
	05104435AA	1	6, 7, 2, 3						With [GNA] Without [NHW]
	68017272AA	1	2, 3, 6, 7						With [GNA + NHW]

SPRINTER (VB)

SERIES	LINE	BODY	ENGINE	TRANSMISSION
L = LOWLINE	3 = HD DODGE 2WD 2 = Med. Duty DODGE 2WD	03 = CAB CHASSIS WHEEL BASE 3 05 = CAB CHASSIS WHEEL BASE 5 13 = 119 WB 53 = 119 WB 15 = VAN WHEEL BASE 5 55 = WAGON WHEEL BASE 5 17 = VAN WHEEL BASE 7	EG2 = 3.5L V6 Gas Engine EXM = 3.0L V6 Turbo Diesel Engine	DGZ = 5-Speed Auto W5A380 Transmission

Rear Cargo Door Glass
Figure SVB-720

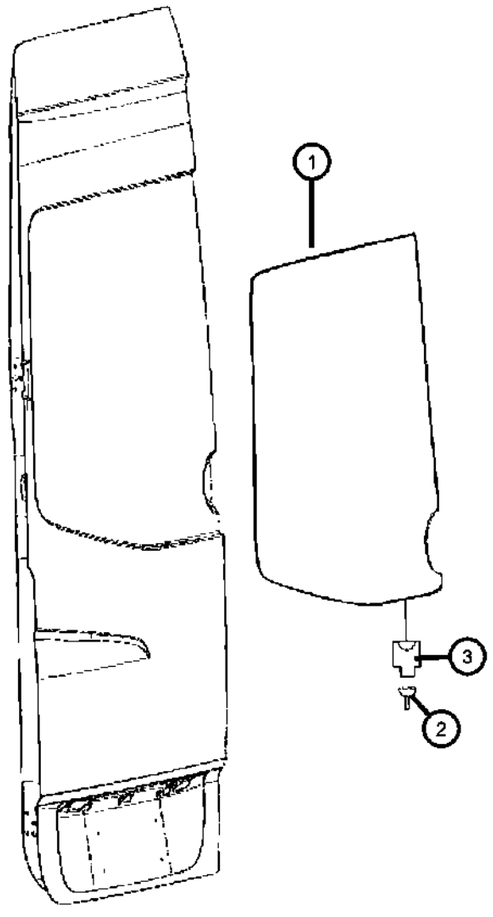

ITEM	PART NUMBER	QTY	LINE	SERIES	BODY	ENGINE	TRANS	TRIM	DESCRIPTION
1									GLASS, Cargo Door
	68006474AA	1	2, 3, 6, 7		13, 15, 17, 53, 55				Left
	68006475AA	1	2, 3, 6, 7		13, 15, 17, 53, 55				With [GFA], Left
	68006477AA	1	3, 6, 7, 2		13, 15, 17, 53, 55				With [GFA + GAE], Left
	68006582AA	1	2, 3, 6, 7		13, 15, 17, 53, 55				Right
	68006583AA	1	2, 3, 6, 7		13, 15, 17, 53, 55				With [GFA], Right
	68006585AA	1	2, 3, 6, 7		13, 15, 17, 53, 55				With [GFA + GAE], Right
2	05133366AA	99	2, 3, 6, 7		13, 15, 17, 53, 55				TERMINAL, Male
3	05103858AA	4	2, 3, 6, 7		13, 15, 17, 53, 55				CONNECTOR

SPRINTER (VB)

SERIES	LINE	BODY	ENGINE	TRANSMISSION
L = LOWLINE	3 = HD DODGE 2WD 2 = Med. Duty DODGE 2WD	03 = CAB CHASSIS WHEEL BASE 3 05 = CAB CHASSIS WHEEL BASE 5 13 = 119 WB 53 = 119 WB 15 = VAN WHEEL BASE 5 55 = WAGON WHEEL BASE 5 17 = VAN WHEEL BASE 7	EG2 = 3.5L V6 Gas Engine EXM = 3.0L V6 Turbo Diesel Engine	DGZ = 5-Speed Auto W5A380 Transmission

Sliding Door Glass
Figure SVB-725

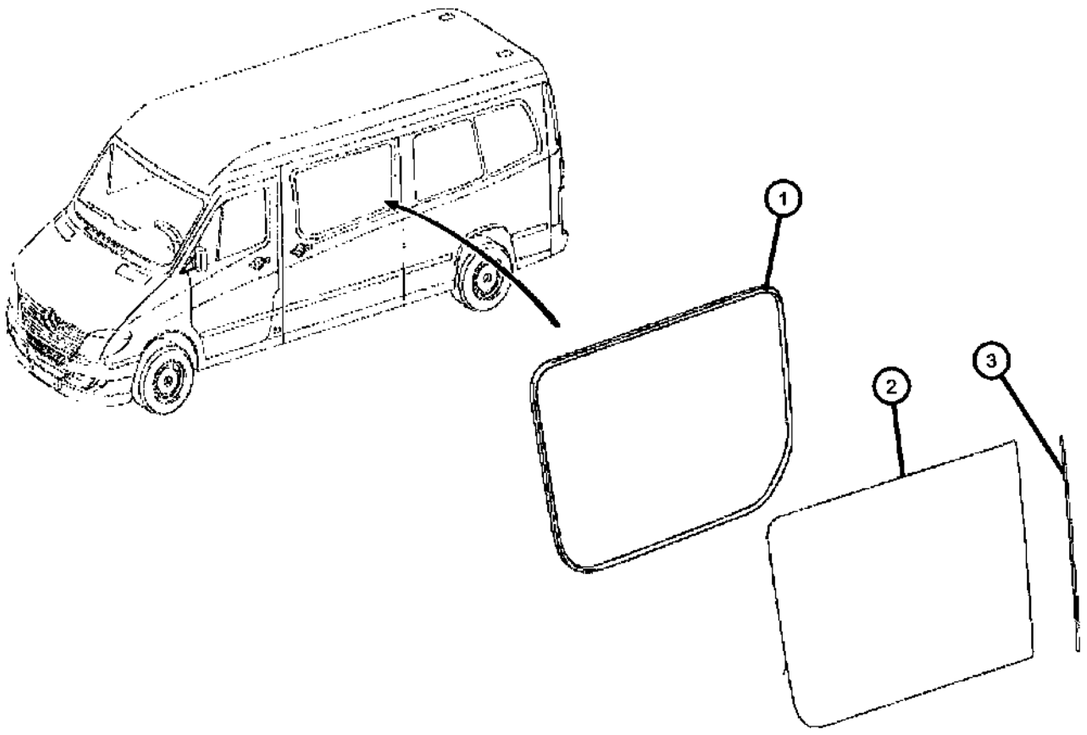

ITEM	PART NUMBER	QTY	LINE	SERIES	BODY	ENGINE	TRANS	TRIM	DESCRIPTION
1	68010256AA	1	2, 3, 6, 7		13, 15, 17, 53, 55				WEATHERSTRIP, Sliding Door
2									GlassRight & Left, Sliding, Door GLASS, Sliding Door
	68010247AA	1	2, 3, 6, 7		13, 15, 17, 53, 55				Right
	68010248AA	1	2, 3, 6, 7		13, 15, 17, 53, 55				With [GAE], Right
	68017376AA	1	2, 3, 6, 7		13, 15, 17, 53, 55				Left
	68017377AA	1	2, 3, 6, 7		13, 15, 17, 53, 55				With [GAE], Left
3	68010255AA	1	2, 3, 6, 7						SEAL

SPRINTER (VB)

SERIES	LINE	BODY	ENGINE	TRANSMISSION
L = LOWLINE	3 = HD DODGE 2WD 2 = Med. Duty DODGE 2WD	03 = CAB CHASSIS WHEEL BASE 3 05 = CAB CHASSIS WHEEL BASE 5 13 = 119 WB 53 = 119 WB 15 = VAN WHEEL BASE 5 55 = WAGON WHEEL BASE 5 17 = VAN WHEEL BASE 7	EG2 = 3.5L V6 Gas Engine EXM = 3.0L V6 Turbo Diesel Engine	DGZ = 5-Speed Auto W5A380 Transmission

Driver & Passenger Door Glass
Figure SVB-730

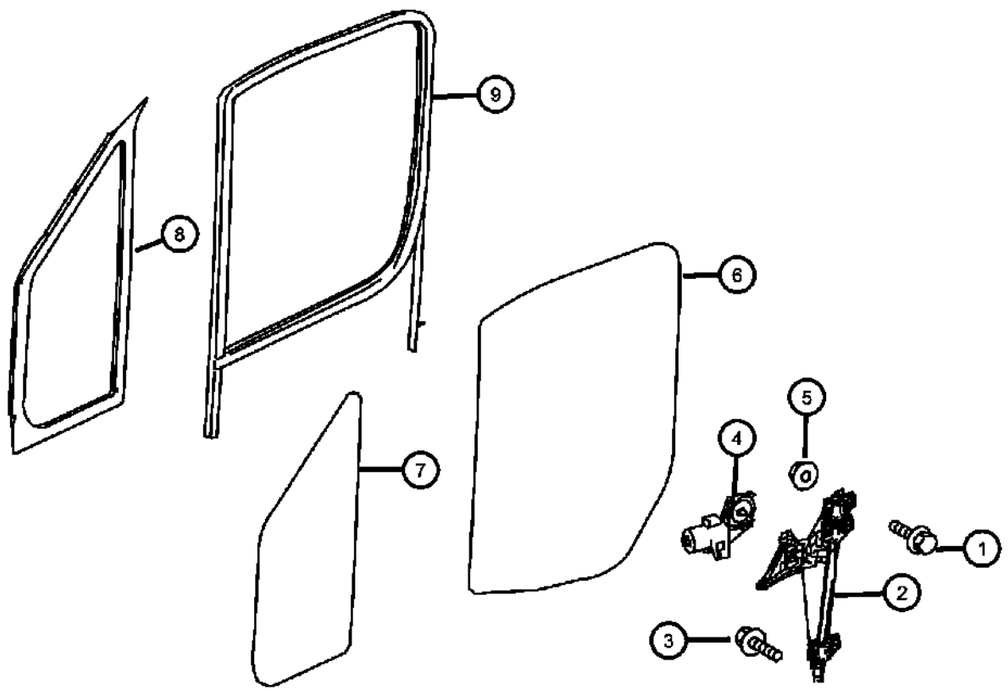

ITEM	PART NUMBER	QTY	LINE	SERIES	BODY	ENGINE	TRANS	TRIM	DESCRIPTION
1									BOLT
	06104004AA	2	2, 3, 6, 7		13, 15, 17, 53, 55				M6x12
		1	2, 3, 6, 7						M6x12
2									REGULATOR, Front Door Window
	68010026AA	1	2, 3, 6, 7						Left
	68010110AA	1	2, 3, 6, 7						Right
3	68010027AA	3	2, 3, 6, 7						SCREW, Motor at Window Lifter, Right & Left
4									MOTOR, Window Regulator, Front Door
	68010028AA	1	3, 7		03, 05				Right
		1	2, 3, 6, 7		13, 15, 17, 53, 55				Right
	68010029AA	1	3, 7		03, 05				Left
		1	2, 3, 6, 7		13, 15, 17, 53, 55				Left
5									NUT, Hex
	05097674AA	2	3, 7		03, 05				Door Power Window M6, Right & Left
		2	2, 3, 6, 7		13, 15, 17, 53, 55				Door Power Window M6, Right & Left
6									GLASS, Front Door
	68010025AA	1	2, 3, 6, 7						Heat Absorbing, Left
	68010109AA	1	2, 3, 6, 7						Heat Absorbing, Right
7									GLASS, Front Door Vent
	68010022AA	1	2, 3, 6, 7						Left
	68010106AA	1	2, 3, 6, 7						Right
8									SEAL, Window Opening
	68010023AA	1	3, 7		03, 05				Left
		1	2, 3, 6, 7		17, 53, 55, 13, 15				Left
	68010107AA	1	3, 7		03, 05				Right
		1	2, 3, 6, 7		13, 15, 17, 53, 55				Right
9									FRAME, Door Glass

SPRINTER (VB)

SERIES	LINE	BODY	ENGINE	TRANSMISSION
L = LOWLINE	3 = HD DODGE 2WD 2 = Med. Duty DODGE 2WD	03 = CAB CHASSIS WHEEL BASE 3 05 = CAB CHASSIS WHEEL BASE 5 13 = 119 WB 53 = 119 WB 15 = VAN WHEEL BASE 5 55 = WAGON WHEEL BASE 5 17 = VAN WHEEL BASE 7	EG2 = 3.5L V6 Gas Engine EXM = 3.0L V6 Turbo Diesel Engine	DGZ = 5-Speed Auto W5A380 Transmission

Driver & Passenger Door Glass
Figure SVB-730

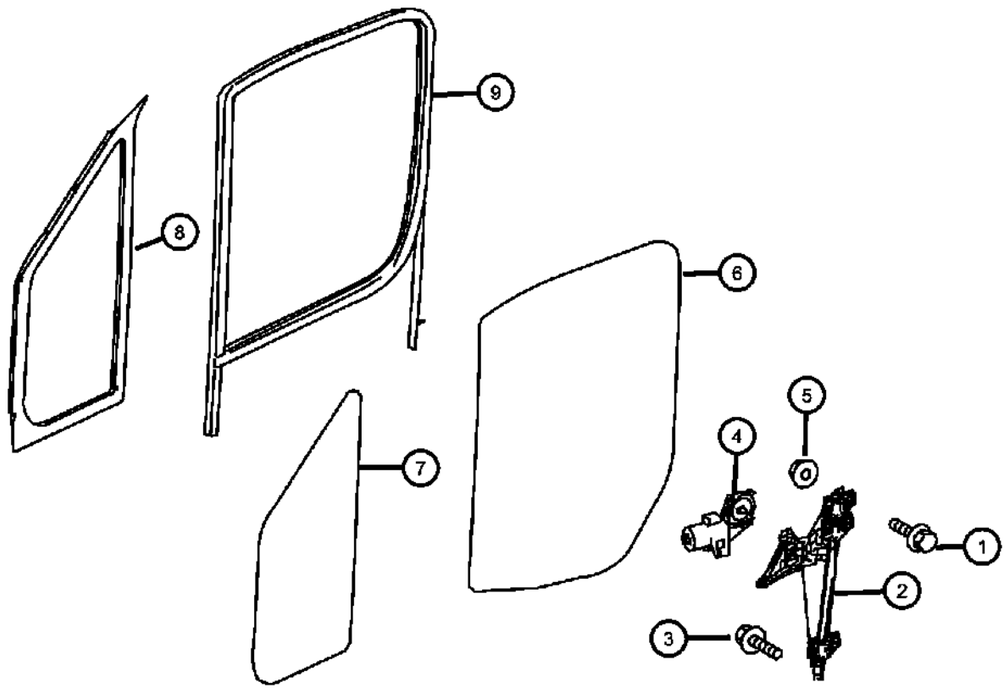

ITEM	PART NUMBER	QTY	LINE	SERIES	BODY	ENGINE	TRANS	TRIM	DESCRIPTION
	68010030AA	1	2, 3, 6, 7						Left Door
	68010111AA	1	2, 3, 6, 7						Right Door

SPRINTER (VB)

SERIES	LINE	BODY	ENGINE	TRANSMISSION
L = LOWLINE	3 = HD DODGE 2WD 2 = Med. Duty DODGE 2WD	03 = CAB CHASSIS WHEEL BASE 3 05 = CAB CHASSIS WHEEL BASE 5 13 = 119 WB 53 = 119 WB 15 = VAN WHEEL BASE 5 55 = WAGON WHEEL BASE 5 17 = VAN WHEEL BASE 7	EG2 = 3.5L V6 Gas Engine EXM = 3.0L V6 Turbo Diesel Engine	DGZ = 5-Speed Auto W5A380 Transmission

Fixed Glass Without Sliding Door
Figure SVB-735

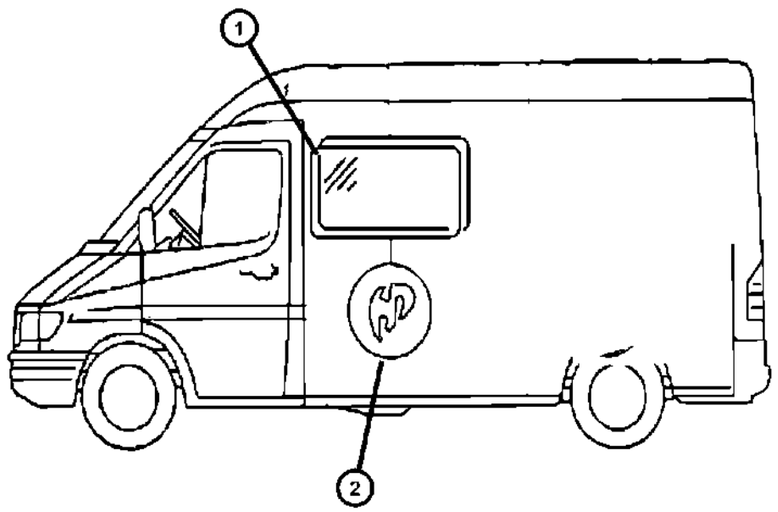

ITEM	PART NUMBER	QTY	LINE	SERIES	BODY	ENGINE	TRANS	TRIM	DESCRIPTION
Note:Fixed Glass Only Without Sliding Door									
1									GLASS, Bodyside Window, See Note
	68018764AA	1	2, 3, 6, 7		13, 15, 17, 53, 55				Left
	68018765AA	1	2, 3, 6, 7		13, 15, 17, 53, 55				With [GAE], Left
	68018767AA	1	2, 3, 6, 7		13, 15, 17				Right
	68018768AA	1	2, 3, 6, 7		13, 15, 17				With [GAE]
2	68018791AA	1	2, 3, 6, 7		13, 15, 17, 53, 55				SEAL, Window OpeningRight & Left

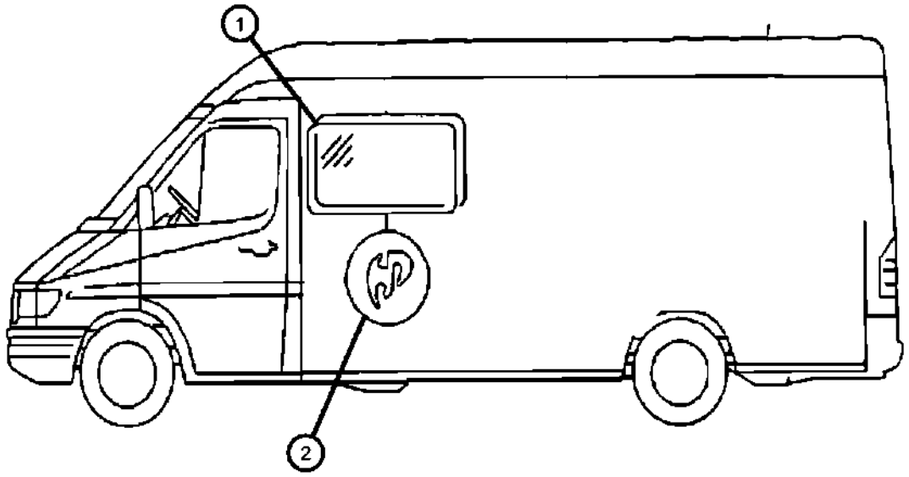

SPRINTER (VB)

SERIES	LINE	BODY	ENGINE	TRANSMISSION
L = LOWLINE	3 = HD DODGE 2WD 2 = Med. Duty DODGE 2WD	03 = CAB CHASSIS WHEEL BASE 3 05 = CAB CHASSIS WHEEL BASE 5 13 = 119 WB 53 = 119 WB 15 = VAN WHEEL BASE 5 55 = WAGON WHEEL BASE 5 17 = VAN WHEEL BASE 7	EG2 = 3.5L V6 Gas Engine EXM = 3.0L V6 Turbo Diesel Engine	DGZ = 5-Speed Auto W5A380 Transmission

Rear Side Glass
Figure SVB-740

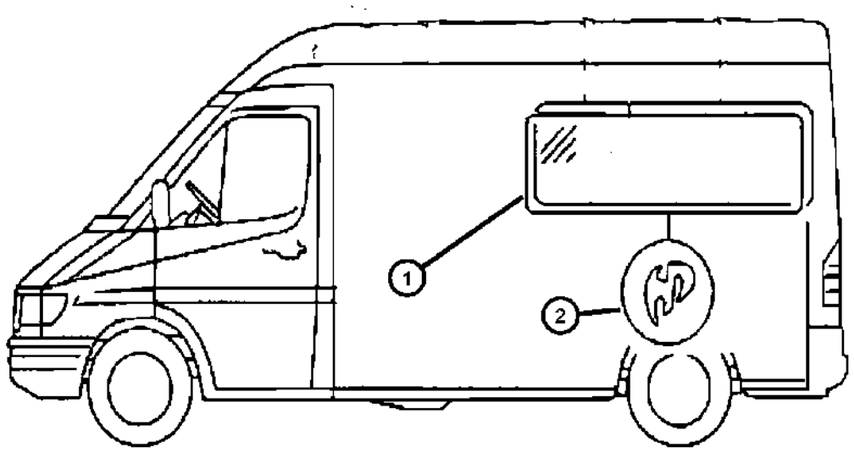

ITEM	PART NUMBER	QTY	LINE	SERIES	BODY	ENGINE	TRANS	TRIM	DESCRIPTION
1									GLASS, Quarter
	68018781AA	1	2, 3, 6, 7		13				With [GES + GKE], Left
	68018782AA	1	7, 2, 3, 6		13, 53				With [GES] Without [GKE], Left
	68018783AA	1	2, 3, 6, 7		13				With [GES + GAE + GKE], Left
	68018784AA	1	2, 3, 6, 7		13, 53				With [GES + GAE] Without [GKE], Left
	68018787AA	1	2, 3, 6, 7		13, 53				With [GKA + GEU], Right
	68018788AA	1	2, 3, 6, 7		13				With [GEU + GK9], Right
	68018789AA	1	2, 3, 6, 7		13, 53				With [GKA + GEU + GAE], Right
	68018790AA	1	2, 3, 6, 7		13				With [GK9 + GEU + GAE], Right
2	68018797AA	1	2, 3, 6, 7		13, 53				SEAL, Window OpeningRight & Left

SPRINTER (VB)

SERIES	LINE	BODY	ENGINE	TRANSMISSION
L = LOWLINE	3 = HD DODGE 2WD 2 = Med. Duty DODGE 2WD	03 = CAB CHASSIS WHEEL BASE 3 05 = CAB CHASSIS WHEEL BASE 5 13 = 119 WB 53 = 119 WB 15 = VAN WHEEL BASE 5 55 = WAGON WHEEL BASE 5 17 = VAN WHEEL BASE 7	EG2 = 3.5L V6 Gas Engine EXM = 3.0L V6 Turbo Diesel Engine	DGZ = 5-Speed Auto W5A380 Transmission

Rear Side And Quarter Glass
Figure SVB-745

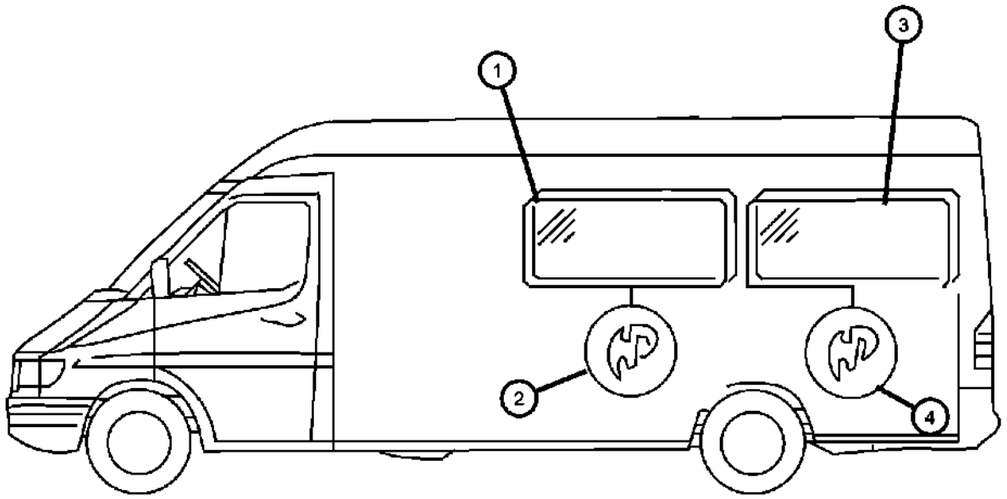

ITEM	PART NUMBER	QTY	LINE	SERIES	BODY	ENGINE	TRANS	TRIM	DESCRIPTION
1									GLASS, Bodyside Window
	68018770AA	1	2, 3, 6, 7		15, 17				With [GKE + GEL], Left
	68018771AA	1	2, 3, 6, 7		55, 15, 17				With [GEL] Without [GKE], Left
	68018772AA	1	2, 3, 6, 7		15, 17				With [GEL + GAE + GKE], Left
	68018773AA	1	2, 3, 6, 7		15, 17, 55				With [GEL + GAE] Without [GKE], Left
	68018775AA	1	2, 3, 6, 7		15, 17, 55				With [GKA + GEQ], Right
	68018776AA	1	2, 3, 6, 7		15, 17				With [GK9 + GEQ], Right
	68018777AA	1	2, 3, 6, 7		15, 17, 55				With [GKA + GEQ + GKE], Right
	68018778AA	1	2, 3, 6, 7		15, 17				With [GK9 + GAE + GEQ], Right
2	68018793AA	1	2, 3, 6, 7		15, 17, 55				SEAL, Window Opening
3									GLASS, Quarter
	68018779AA	1	2, 3, 6, 7		15, 17, 55				With [GES], Left
	68018780AA	1	2, 3, 6, 7		15, 17, 55				With [GES + GAE], Left
	68018785AA	1	2, 3, 6, 7		15, 17, 55				With [GEU], Right
	68018786AA	1	2, 3, 6, 7		15, 17, 55				With [GEU + GAE], Right
4	68018795AA	1	2, 3, 6, 7		15, 17, 55				SEAL, Window Opening

SPRINTER (VB)

SERIES	LINE	BODY	ENGINE	TRANSMISSION
L = LOWLINE	3 = HD DODGE 2WD 2 = Med. Duty DODGE 2WD	03 = CAB CHASSIS WHEEL BASE 3 05 = CAB CHASSIS WHEEL BASE 5 13 = 119 WB 53 = 119 WB 15 = VAN WHEEL BASE 5 55 = WAGON WHEEL BASE 5 17 = VAN WHEEL BASE 7	EG2 = 3.5L V6 Gas Engine EXM = 3.0L V6 Turbo Diesel Engine	DGZ = 5-Speed Auto W5A380 Transmission

Window & Head Side Airbag
Figure SVB-750

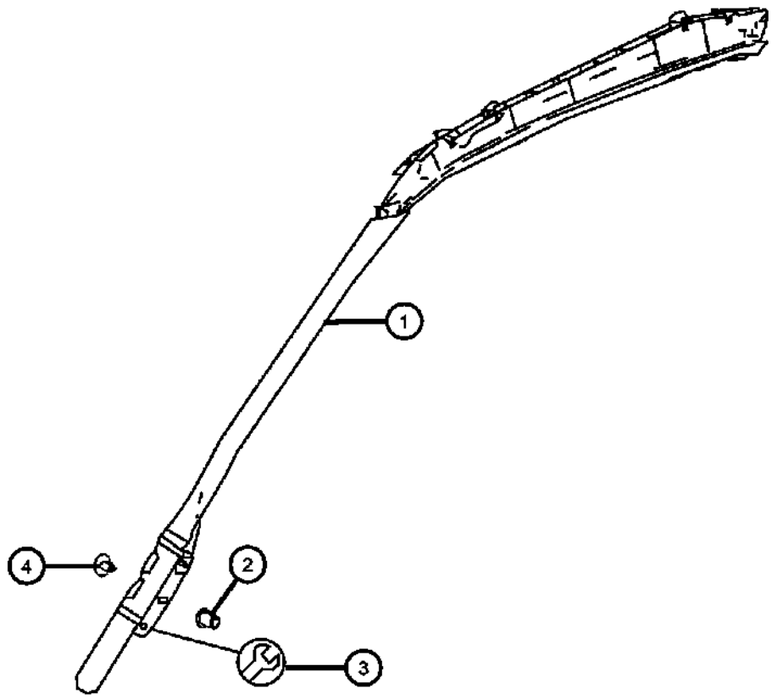

ITEM	PART NUMBER	QTY	LINE	SERIES	BODY	ENGINE	TRANS	TRIM	DESCRIPTION
1									AIR BAG, Side Curtain
	1HD69NC-VAA	1	2, 3, 6, 7						Left
	1HD70NC-VAA	1	2, 3, 6, 7						Right
2	05133486AA	4	2, 3, 6, 7						RIVET
3	68016751AA	2	2, 3, 6, 7						CONNECTOR
4	68014337AA	8	2, 3, 6, 7						SCREW

SPRINTER (VB)

SERIES	LINE	BODY	ENGINE	TRANSMISSION
L = LOWLINE	3 = HD DODGE 2WD 2 = Med. Duty DODGE 2WD	03 = CAB CHASSIS WHEEL BASE 3 05 = CAB CHASSIS WHEEL BASE 5 13 = 119 WB 53 = 119 WB 15 = VAN WHEEL BASE 5 55 = WAGON WHEEL BASE 5 17 = VAN WHEEL BASE 7	EG2 = 3.5L V6 Gas Engine EXM = 3.0L V6 Turbo Diesel Engine	DGZ = 5-Speed Auto W5A380 Transmission

Front Aperture,Inner left
Figure SVB-810

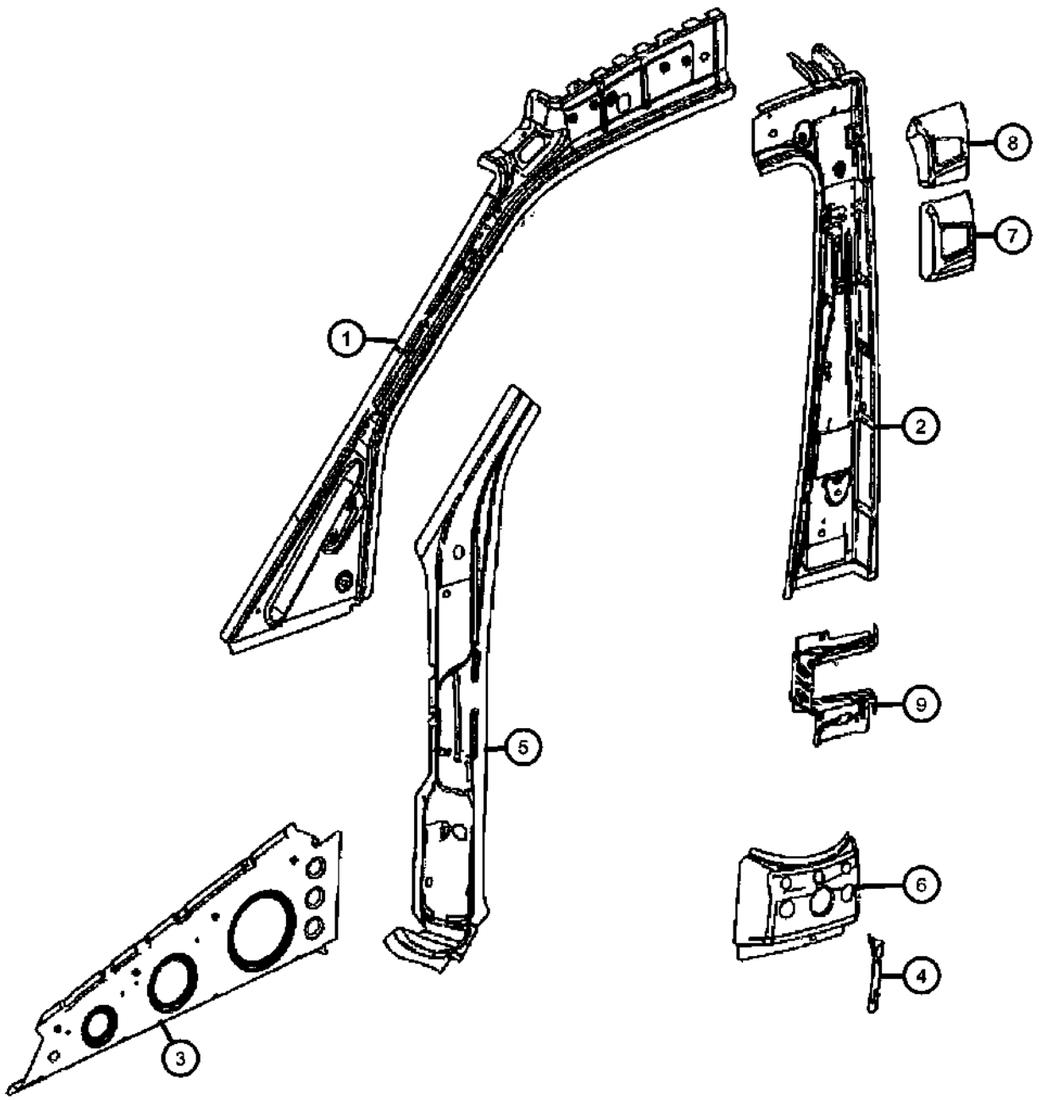

ITEM	PART NUMBER	QTY	LINE	SERIES	BODY	ENGINE	TRANS	TRIM	DESCRIPTION
Note:Sales Code: [CTA]=Shelf Above Roof Trim [GKE]=Left Sliding Door No Glass [MWJ]=High Roof [MX1]=Mega Roof Painted [MX2]=Mega Roof White									
1	68005113AA	1	2, 3, 6, 7						PANEL, A PillarTop, Left
2									PANEL, B Pillar
	68008693AA	1	2, 3, 6, 7		13, 15, 17, 53, 55				Without [GKE], Left
	68008694AA	1	2, 3, 6, 7		13, 15, 17, 53, 55				With [MWJ or MX1 or MX2], Left
	68008697AA	1	2, 3, 6, 7		13, 15, 17, 53, 55				With [CTA] With [MWJ or MX1 or MX2], Left
	68029947AA	1	2, 3, 6, 7		13, 15, 17, 53, 55				With [MX1 or MX2] Without [GKE], Left
	68029948AA	1	2, 3, 6, 7		13, 15, 17, 53, 55				With [CTA] With [MX1 or MX2] Without [GKE], Left
3	68008424AA	1	2, 3, 6, 7						REINFORCEMENT, Cowl Side, Side Member, Front Left
4	68008521AA	1	2, 3, 6, 7		13, 15, 17, 53, 55				BRACKET, Angle B-Pillar on the Left
5	68008425AA	1	2, 3, 6, 7						PANEL, Cowl Side, Left Hinge Reinforcement
6	68008524AA	1	7, 2, 3, 6		13, 15, 17, 53, 55				REINFORCEMENT, Locking Wedge,Bottom-With [GKE], Left
7	68008527AA	1	2, 3, 6, 7		13, 15, 17				REINFORCEMENT, B-Pillar, Locking Wedge Top-With [GKE], Left
8	68008526AA	1	2, 3, 6, 7		13, 15, 17				REINFORCEMENT, B-Pillar, Locking Wedge Top-With [MWJ or MX1 or MX2] With [GKE], Left
9	68008530AA	1	2, 3, 6, 7		13, 15, 17, 53, 55				PILLAR, Front Door Lock, Locking Eye, Left

SPRINTER (VB)

SERIES	LINE	BODY	ENGINE	TRANSMISSION
L = LOWLINE	3 = HD DODGE 2WD 2 = Med. Duty DODGE 2WD	03 = CAB CHASSIS WHEEL BASE 3 05 = CAB CHASSIS WHEEL BASE 5 13 = 119 WB 53 = 119 WB 15 = VAN WHEEL BASE 5 55 = WAGON WHEEL BASE 5 17 = VAN WHEEL BASE 7	EG2 = 3.5L V6 Gas Engine EXM = 3.0L V6 Turbo Diesel Engine	DGZ = 5-Speed Auto W5A380 Transmission

Front Aperture,Outer Left
Figure SVB-820

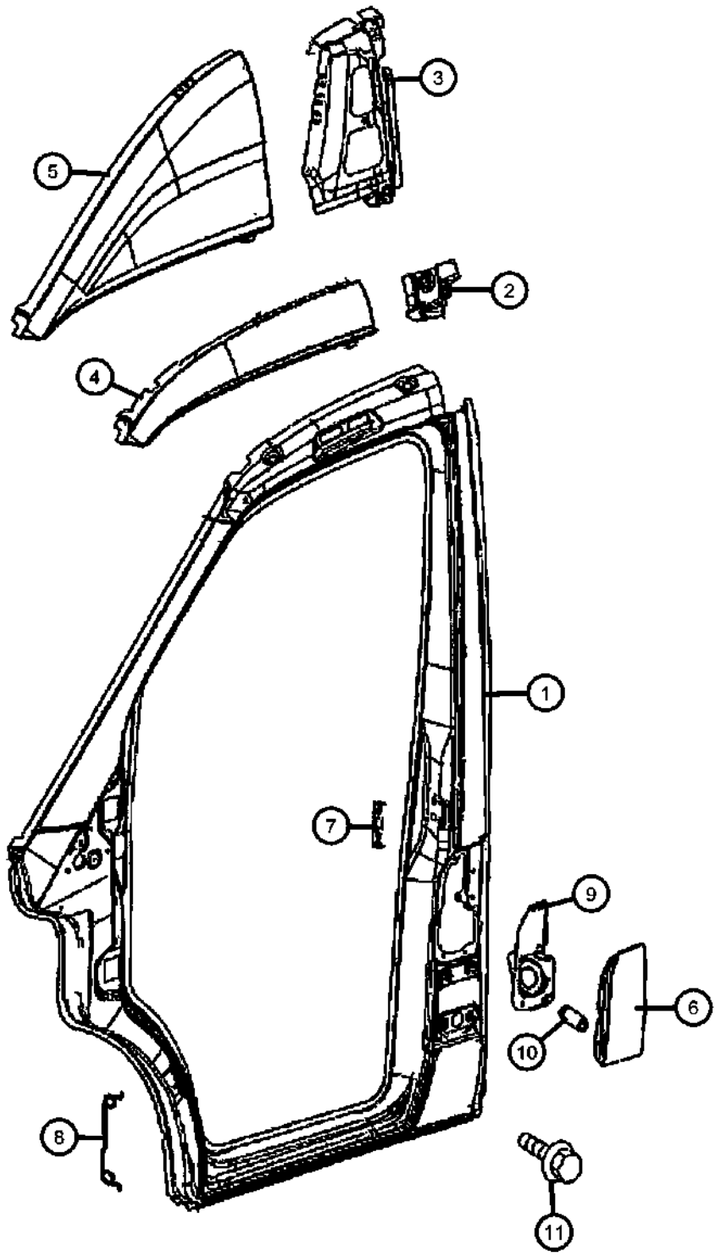

ITEM	PART NUMBER	QTY	LINE	SERIES	BODY	ENGINE	TRANS	TRIM	DESCRIPTION
Note:Sales Code: [GKE]=Left Sliding Door No Glass [MWJ]=High Roof [MX1]=Mega Roof Painted [MX2]=Mega Roof White									
1									APERTURE, Body Side Door
	68008451AA	1	2, 3, 6, 7		13, 15, 17, 53, 55				Without [MWJ or MX1 or MX2], Left
	68008452AA	1	2, 3, 6, 7		13, 15, 17, 53, 55				With [MWJ or MX1 or MX2], Left
2									BRACKET, B-Pillar
	68005109AA	1	2, 3, 6, 7		13, 15, 17, 53, 55				B-Pillar With [GKE], Top, Left
	68005110AA	1	2, 3, 6, 7		13, 15, 17, 53, 55				B-Pillar Without [GKE], Top, Left
3									PANEL, Body Side Aperture
	68008495AA	1	2, 3, 6, 7		13, 15, 17, 53, 55				B-Pillar With [MWJ or MX1 or MX2] + [GKE], Top, Left
	68008496AA	1	2, 3, 6, 7		13, 15, 17, 53, 55				B-Pillar With [MWJ or MX1 or MX2], Top, Left
4	68008512AA	1	2, 3, 6, 7		13, 15, 17, 53, 55				PANEL, Roof, Roof Left Front Rail Without [MWJ or MX1 or MX2]
5	68008513AA	1	2, 3, 6, 7		13, 15, 17, 53, 55				PANEL, Roof, Roof Left Front Rail With [MWJ or MX1 or MX2]
6	68008440AA	1	2, 3, 6, 7						DOOR, Fuel Fill
7	68008443AA	1	2, 3, 6, 7						BRACKET, Fuel Fill Door
8									SPRING, Fuel Filler Door
	05104408AA	1	2, 3, 6, 7		55, 13, 15, 17, 53				
		1	3, 7		03, 05				
9		1							FILLER, Fuel Filler Tube Mounting, (NOT SERVICED)
10	68008447AA	2	2, 3, 6, 7						BUMPER, Fuel Door
11	06104120AA	6	2, 3, 6, 7						SCREW, Hex Head, M6x12, Fuel Fill Door, Mounting

SPRINTER (VB)

SERIES	LINE	BODY	ENGINE	TRANSMISSION
L = LOWLINE	3 = HD DODGE 2WD 2 = Med. Duty DODGE 2WD	03 = CAB CHASSIS WHEEL BASE 3 05 = CAB CHASSIS WHEEL BASE 5 13 = 119 WB 53 = 119 WB 15 = VAN WHEEL BASE 5 55 = WAGON WHEEL BASE 5 17 = VAN WHEEL BASE 7	EG2 = 3.5L V6 Gas Engine EXM = 3.0L V6 Turbo Diesel Engine	DGZ = 5-Speed Auto W5A380 Transmission

Front Aperture,Inner Right
Figure SVB-830

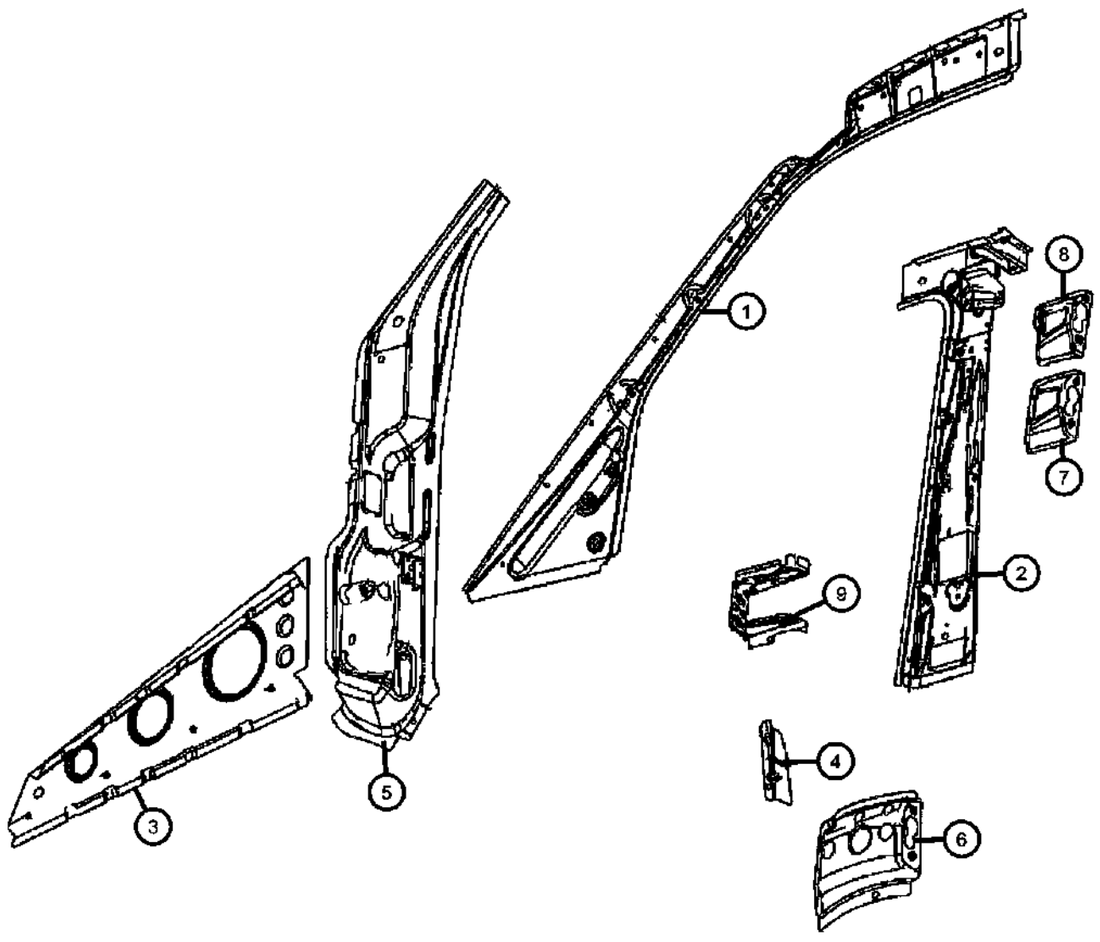

ITEM	PART NUMBER	QTY	LINE	SERIES	BODY	ENGINE	TRANS	TRIM	DESCRIPTION
Note:Sales Code: [CTA]=Shelf Above Roof Trim [GKA]=Right Sliding Door [GK9]=Delete Right Sliding Door [MX1]=Mega Roof Painted [MX2]=Mega Roof White [MWJ]=High Roof									
1	68005138AA	1	2, 3, 6, 7						PANEL, A PillarTop, Right
2									PANEL, B-Pillar
	68008696AA	1	2, 3, 6, 7		13, 15, 17, 53, 55				With [CTA+GK9+[MWJ or MX1 or MX2], Right
	68009312AA	1	2, 3, 6, 7		13, 15, 17				With [GK9], Right
	68009313AA	1	2, 3, 6, 7		13, 15, 17, 53, 55				With [MWJ or MX1 or MX2] +[GK9], Right
	68029941AA	1	2, 3, 6, 7		13, 15, 17, 53, 55				With [MX1 or MX2] Without [GKA], Right
	68029946AA	1	2, 3, 6, 7		13, 15, 17, 53, 55				With [CTA]+MX1 or MX2] Without [GKA], Right
3	68009199AA	1	2, 3, 6, 7						REINFORCEMENT, Cowl Side, Side Member, Front, Right
4	68009208AA	1	2, 3, 6, 7		13, 15, 17, 53, 55				BRACKET, Angel B Pillar on the Right With [GK9]
5	68009200AA	1	2, 3, 6, 7						PANEL, Cowl Side, Right Hinge Reinforcement
6	68009202AA	1	2, 3, 6, 7		13, 15, 17, 53, 55				REINFORCEMENT, Locking Wedge Bottom With [GKA], Right
7	68009205AA	1	2, 3, 6, 7		13, 15, 17, 53, 55				REINFORCEMENT, B-Pillar, Locking Wedge Top With [GKA], Right
8	68009204AA	1	2, 3, 6, 7		13, 15, 17, 53, 55				REINFORCEMENT, B-Pillar, Locking Wedge Top With [MWJ or MX1 or MX2] With [GKA], Right
9	68009209AA	1	2, 3, 6, 7		13, 15, 17, 53, 55				PILLAR, Front Door Lock, Locking Eye Without [MWJ or MX1 or MX2] With [GKA], Right

SPRINTER (VB)

SERIES	LINE	BODY	ENGINE	TRANSMISSION
L = LOWLINE	3 = HD DODGE 2WD 2 = Med. Duty DODGE 2WD	03 = CAB CHASSIS WHEEL BASE 3 05 = CAB CHASSIS WHEEL BASE 5 13 = 119 WB 53 = 119 WB 15 = VAN WHEEL BASE 5 55 = WAGON WHEEL BASE 5 17 = VAN WHEEL BASE 7	EG2 = 3.5L V6 Gas Engine EXM = 3.0L V6 Turbo Diesel Engine	DGZ = 5-Speed Auto W5A380 Transmission

Front Aperture,Outer,Right
Figure SVB-840

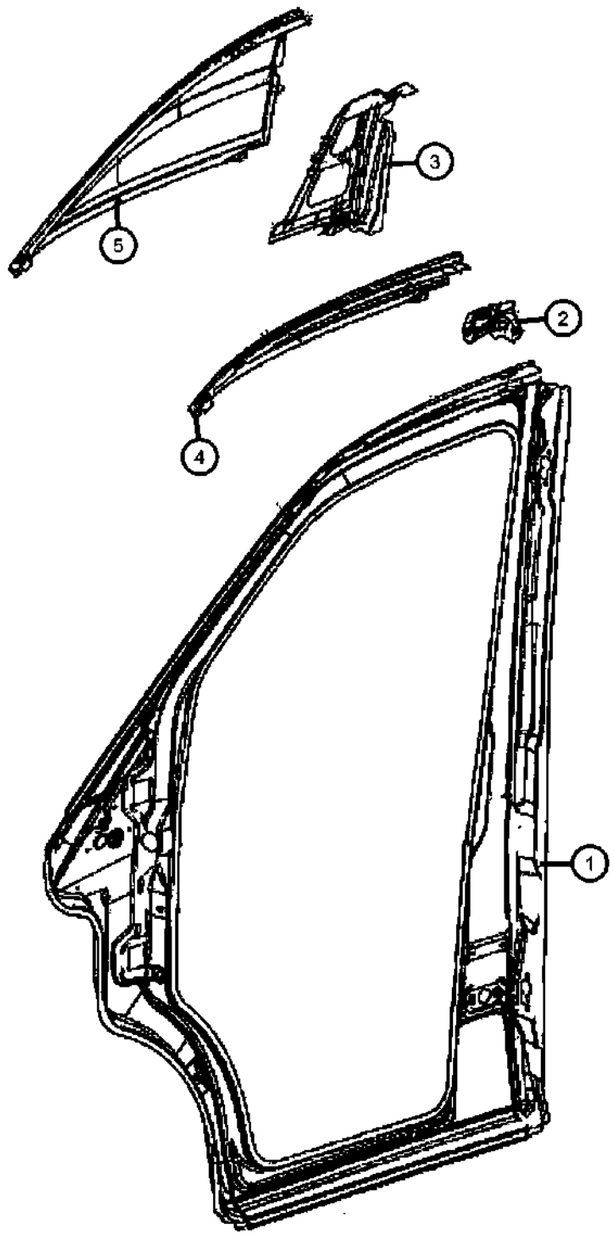

ITEM	PART NUMBER	QTY	LINE	SERIES	BODY	ENGINE	TRANS	TRIM	DESCRIPTION
Note:Sales Code: [GKA]=Right Sliding Door [GK9]=Delete Right Sliding Door [MX1]=Mega Roof Painted [MX2]=Mega Roof White [MWJ]=High Roof									
1									APERTURE, Body Side Door
	68009141AA	1	2, 3, 6, 7		13, 15, 17, 53, 55				Without [MWJ or MX1 or MX2], Right
	68009142AA	1	2, 3, 6, 7		13, 15, 17, 53, 55				With [MWJ or MX1 or MX2], Right
2									BRACKET, B-Pillar
	68009211AA	1	2, 3, 6, 7		13, 15, 17, 53, 55				B-Pillar Without [GKA], Top, Right
	68005134AA	1	2, 3, 6, 7		13, 15, 17, 53, 55				B-Pillar With [GKA], Top, Right
3									PANEL, Body Side Aperture
	68005136AA	1	2, 3, 6, 7		13, 15, 17, 53, 55				With [MWJ or MX1 or MX2] + [GK9], Top, Right
	68005137AA	1	2, 3, 6, 7		13, 15, 17, 53, 55				Without [MWJ or MX1 or MX2], Top, Right
4	68009188AA	1	2, 3, 6, 7		13, 15, 17, 53, 55				PANEL, Roof, Right Front Roof Rail Without [MWJ or MX1 or MX2]
5	68009189AA	1	2, 3, 6, 7		15, 17, 53, 55, 13				PANEL, Roof, Right Front Roof Rail With [MWJ or MX1 or MX2]

SPRINTER (VB)

SERIES	LINE	BODY	ENGINE	TRANSMISSION
L = LOWLINE	3 = HD DODGE 2WD 2 = Med. Duty DODGE 2WD	03 = CAB CHASSIS WHEEL BASE 3 05 = CAB CHASSIS WHEEL BASE 5 13 = 119 WB 53 = 119 WB 15 = VAN WHEEL BASE 5 55 = WAGON WHEEL BASE 5 17 = VAN WHEEL BASE 7	EG2 = 3.5L V6 Gas Engine EXM = 3.0L V6 Turbo Diesel Engine	DGZ = 5-Speed Auto W5A380 Transmission

Outer Side Panel, Left
Figure SVB-905

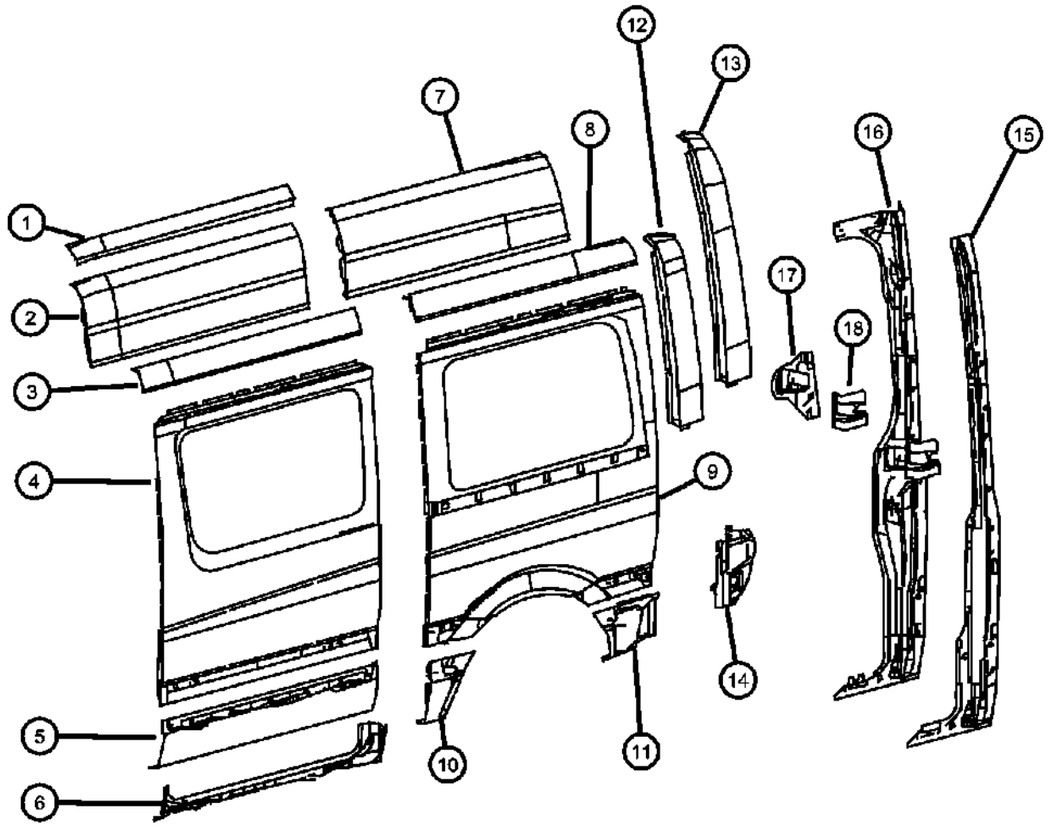

ITEM	PART NUMBER	QTY	LINE	SERIES	BODY	ENGINE	TRANS	TRIM	DESCRIPTION
1	68008503AA	1	2, 3, 6, 7		13, 15, 17, 53, 55				PANEL, Roof
2	68008504AA	1	2, 3, 6, 7		13, 15, 17, 53, 55				PANEL, Roof
3									PANEL, Roof
	68008510AA	1	2, 3, 6, 7		13, 53				[GKE]
	68008511AA	1	2, 3, 6, 7		13, 53				
4	68008462AA	1	2, 3, 6, 7		13, 15, 17, 53, 55				PANEL, Body Side
5	68008493AA	1	2, 3, 6, 7		13, 15, 17, 53, 55				ROCKER
6	68008519AA	1	2, 3, 6, 7		13, 15, 17, 53, 55				PANEL, Sill
7									PANEL, Roof
	68008512AA	1	2, 3, 6, 7		13, 15, 17, 53, 55				
	68008516AA	1	2, 3, 6, 7		13, 53				[5CF]
	68008518AA	1	2, 3, 6, 7		15, 55				[5CG]
8	68008517AA	1	2, 3, 6, 7		13, 53				PANEL, Roof
9									PANEL, Body Side Rear
	68008482AA	1	2, 3, 6, 7		17				With [5CK+GES]
		1	2, 3, 6, 7		17				With [5CK]
	68008484AA	1	2, 3, 6, 7		17				With [5CK+GKE+GES]
		1	2, 3, 6, 7		17				With [5CK+GKE]
10									PANEL, Wheelhouse
	68008466AA	1	2, 3, 6, 7		13, 53				[5CF]
	68008467AA	1	2, 3, 6, 7		15, 17, 55				
11									PANEL, Wheelhouse
	68008489AA	1	2, 3, 6, 7		13, 53				[5CF]
	68008490AA	1	2, 3, 6, 7		15, 55				[5CG]
12	68008531AA	1	2, 3, 6, 7		13, 15, 17, 53, 55				PANEL, D Pillar, Side Panel Outside D_Pillar
13	68008532AA	1	2, 3, 6, 7		13, 15, 17, 53, 55				PANEL, D Pillar
14	68008533AA	1	2, 3, 6, 7		13, 15, 17, 53, 55				EXTENSION, D Pillar Lower
15									PANEL, D Pillar

SPRINTER (VB)

SERIES	LINE	BODY	ENGINE	TRANSMISSION
L = LOWLINE	3 = HD DODGE 2WD 2 = Med. Duty DODGE 2WD	03 = CAB CHASSIS WHEEL BASE 3 05 = CAB CHASSIS WHEEL BASE 5 13 = 119 WB 53 = 119 WB 15 = VAN WHEEL BASE 5 55 = WAGON WHEEL BASE 5 17 = VAN WHEEL BASE 7	EG2 = 3.5L V6 Gas Engine EXM = 3.0L V6 Turbo Diesel Engine	DGZ = 5-Speed Auto W5A380 Transmission

Outer Side Panel, Left
Figure SVB-905

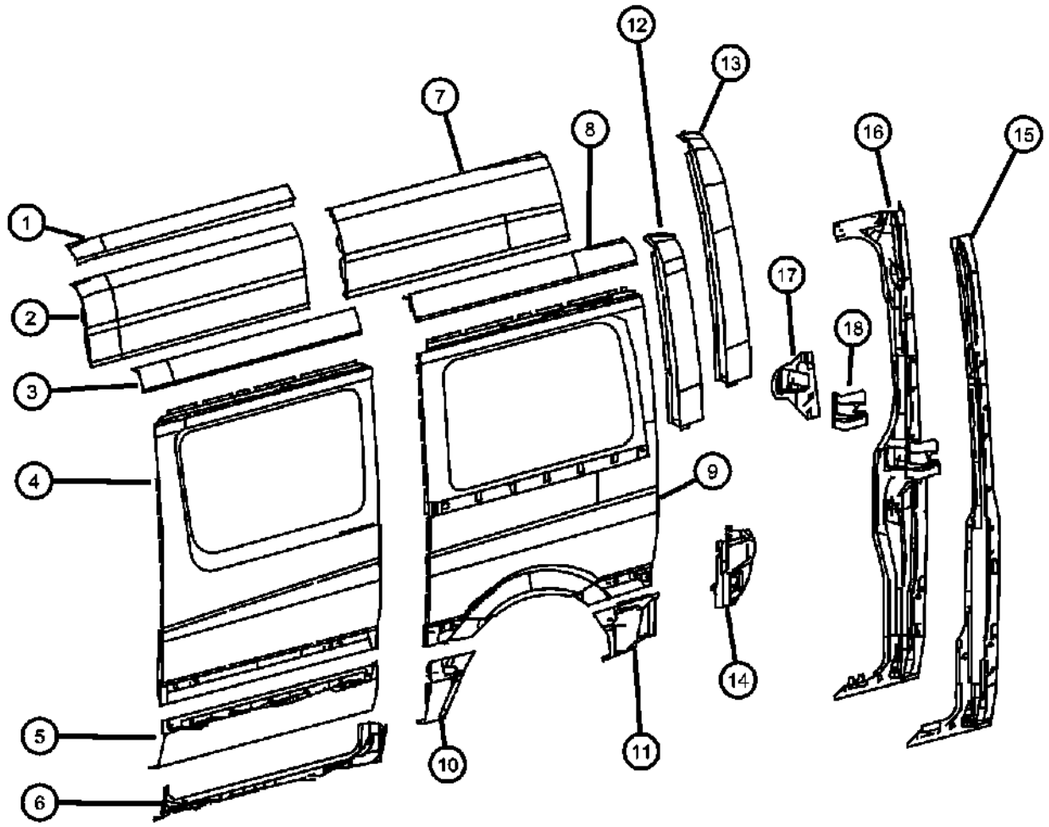

ITEM	PART NUMBER	QTY	LINE	SERIES	BODY	ENGINE	TRANS	TRIM	DESCRIPTION
	68008671AA	1	2, 3, 6, 7		13, 15, 17, 53, 55				High or Super High Roof
	68008669AA	1	2, 3, 6, 7		13, 15, 17, 53, 55				
16									PILLAR, Side Cargo Door
	68008667AA	1	2, 3, 6, 7		13, 15, 17, 53, 55				High Roof and Super High Roof
	68008673AA	1	2, 3, 6, 7		13, 15, 17, 53, 55				Standard
17	68008662AA	1	2, 3, 6, 7		13, 15, 17, 53, 55				PLATE
18	68008665AA	1	2, 3, 6, 7		13, 15, 17, 53, 55				PLATE

SPRINTER (VB)

SERIES	LINE	BODY	ENGINE	TRANSMISSION
L = LOWLINE	3 = HD DODGE 2WD 2 = Med. Duty DODGE 2WD	03 = CAB CHASSIS WHEEL BASE 3 05 = CAB CHASSIS WHEEL BASE 5 13 = 119 WB 53 = 119 WB 15 = VAN WHEEL BASE 5 55 = WAGON WHEEL BASE 5 17 = VAN WHEEL BASE 7	EG2 = 3.5L V6 Gas Engine EXM = 3.0L V6 Turbo Diesel Engine	DGZ = 5-Speed Auto W5A380 Transmission

Outer Side Panel, Right
Figure SVB-910

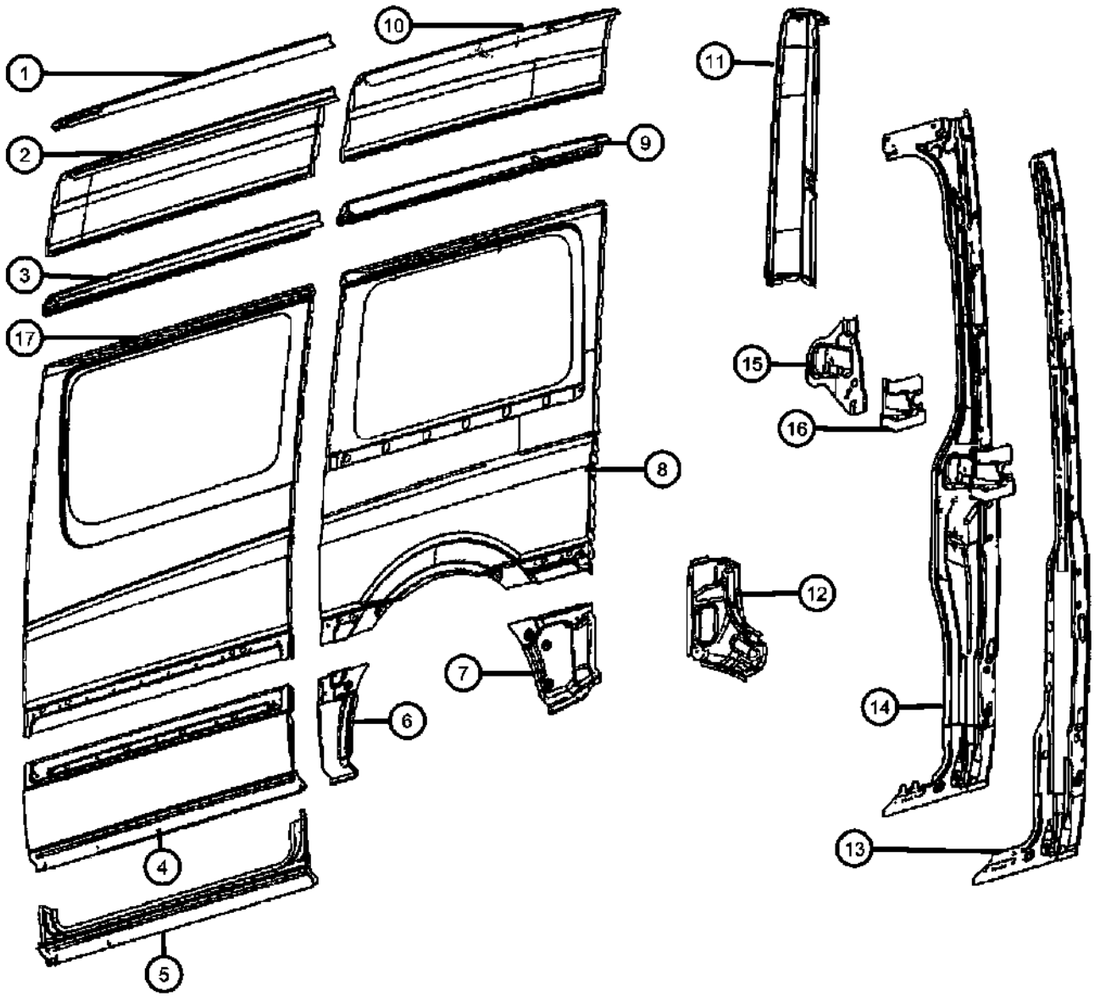

ITEM	PART NUMBER	QTY	LINE	SERIES	BODY	ENGINE	TRANS	TRIM	DESCRIPTION
1									PANEL, Roof
	68009182AA	1	2, 3, 6, 7		13, 15, 17, 53, 55				
2									PANEL, Body Side
	68009181AA	1	2, 3, 6, 7		13, 15, 17, 53, 55				
3									PANEL, Roof
	68009186AA	1	2, 3, 6, 7		13, 53				
	68009187AA	1	2, 3, 6, 7		15, 17, 53, 55, 13				
4									PANEL, Body Side
	68009195AA	1	2, 3, 6, 7		13, 15, 17, 53, 55				
5	68009196AA	1	2, 3, 6, 7		13, 15, 17, 53, 55				ROCKER
6									PANEL, Body Side
	68009156AA	1	2, 3, 6, 7		13, 53				
	68009157AA	1	2, 3, 6, 7		15, 17, 55				
7									PANEL, Wheelhouse
	68005132AA	1	2, 3, 6, 7		17				
	68008488AA	1	2, 3, 6, 7		13, 53				
	68009177AA	1	2, 3, 6, 7		15, 55				
8	68009162AA	1	2, 3, 6, 7		13, 53				PANEL, Rear Body
9	68009193AA	1	2, 3, 6, 7		13, 53				PANEL, Roof
10									PANEL, Roof
	68005133AA	1	2, 3, 6, 7		17				
	68009192AA	1	2, 3, 6, 7		13, 53				
	68009194AA	1	2, 3, 6, 7		15, 55				
11	68009212AA	1	2, 3, 6, 7		13, 15, 17, 53, 55				PANEL, D Pillar
12	68009214AA	1	2, 3, 6, 7		13, 15, 17, 53, 55				REINFORCEMENT
13									PANEL, D Pillar
	68008668AA	1	2, 3, 6, 7		13, 15, 17, 53, 55				
	68008670AA	1	2, 3, 6, 7		13, 15, 17, 53, 55				High and Super High Roof
14									PILLAR, Side Cargo Door
	68008666AA	1	2, 3, 6, 7		53, 55, 13, 15, 17				High and Super High Roof

SPRINTER (VB)

SERIES	LINE	BODY	ENGINE	TRANSMISSION
L = LOWLINE	3 = HD DODGE 2WD 2 = Med. Duty DODGE 2WD	03 = CAB CHASSIS WHEEL BASE 3 05 = CAB CHASSIS WHEEL BASE 5 13 = 119 WB 53 = 119 WB 15 = VAN WHEEL BASE 5 55 = WAGON WHEEL BASE 5 17 = VAN WHEEL BASE 7	EG2 = 3.5L V6 Gas Engine EXM = 3.0L V6 Turbo Diesel Engine	DGZ = 5-Speed Auto W5A380 Transmission

Outer Side Panel, Right
Figure SVB-910

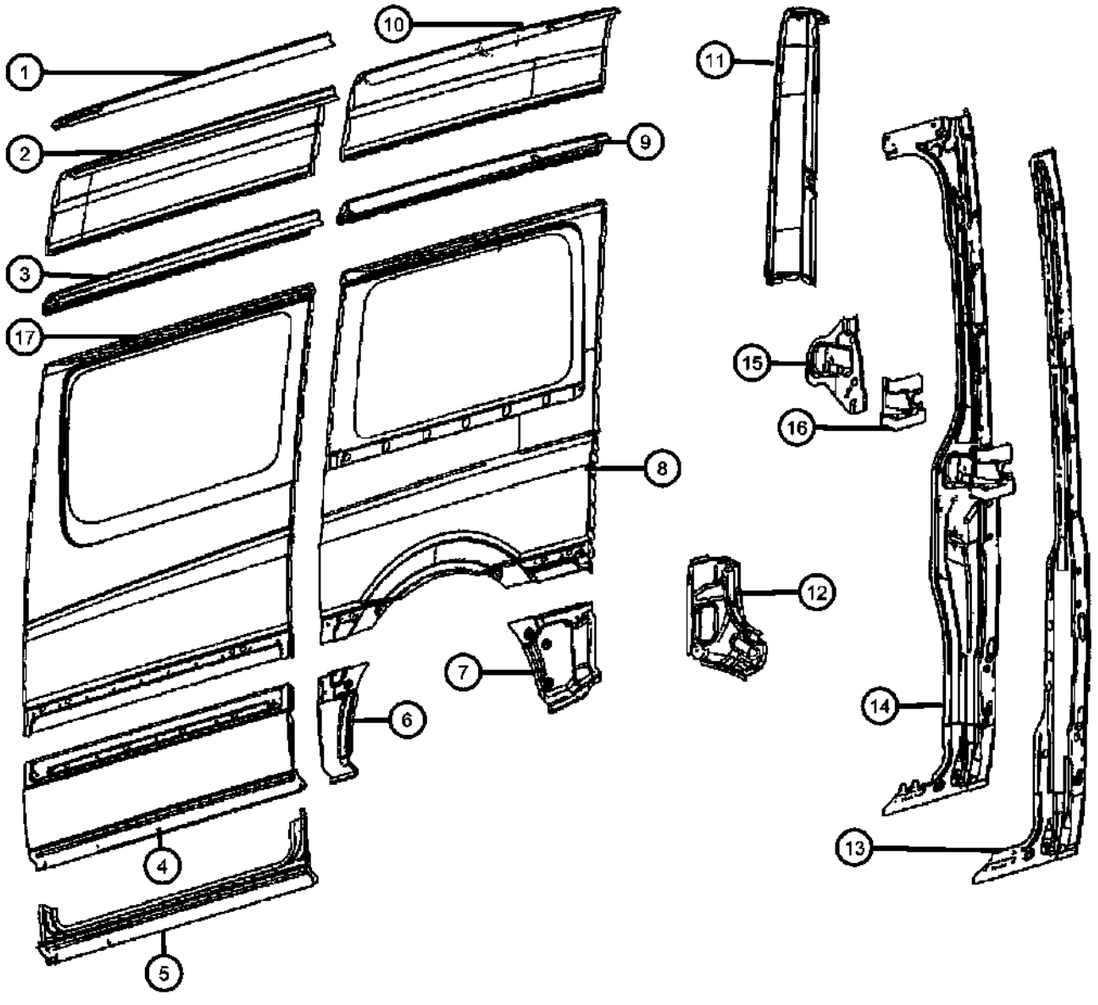

ITEM	PART NUMBER	QTY	LINE	SERIES	BODY	ENGINE	TRANS	TRIM	DESCRIPTION
	68008672AA	1	2, 3, 6, 7		13, 15, 17, 53, 55				
15	68006310AA	1	2, 3, 6, 7						BRACKET
16	68008664AA	1	2, 3, 6, 7		13, 15, 17, 53, 55				PLATE
17	68009152AA	1	2, 3, 6, 7		13, 15, 17, 53, 55				PANEL, Body Side

SPRINTER (VB)

SERIES	LINE	BODY	ENGINE	TRANSMISSION
L = LOWLINE	3 = HD DODGE 2WD 2 = Med. Duty DODGE 2WD	03 = CAB CHASSIS WHEEL BASE 3 05 = CAB CHASSIS WHEEL BASE 5 13 = 119 WB 53 = 119 WB 15 = VAN WHEEL BASE 5 55 = WAGON WHEEL BASE 5 17 = VAN WHEEL BASE 7	EG2 = 3.5L V6 Gas Engine EXM = 3.0L V6 Turbo Diesel Engine	DGZ = 5-Speed Auto W5A380 Transmission

Side Panel Inner, Left
Figure SVB-915

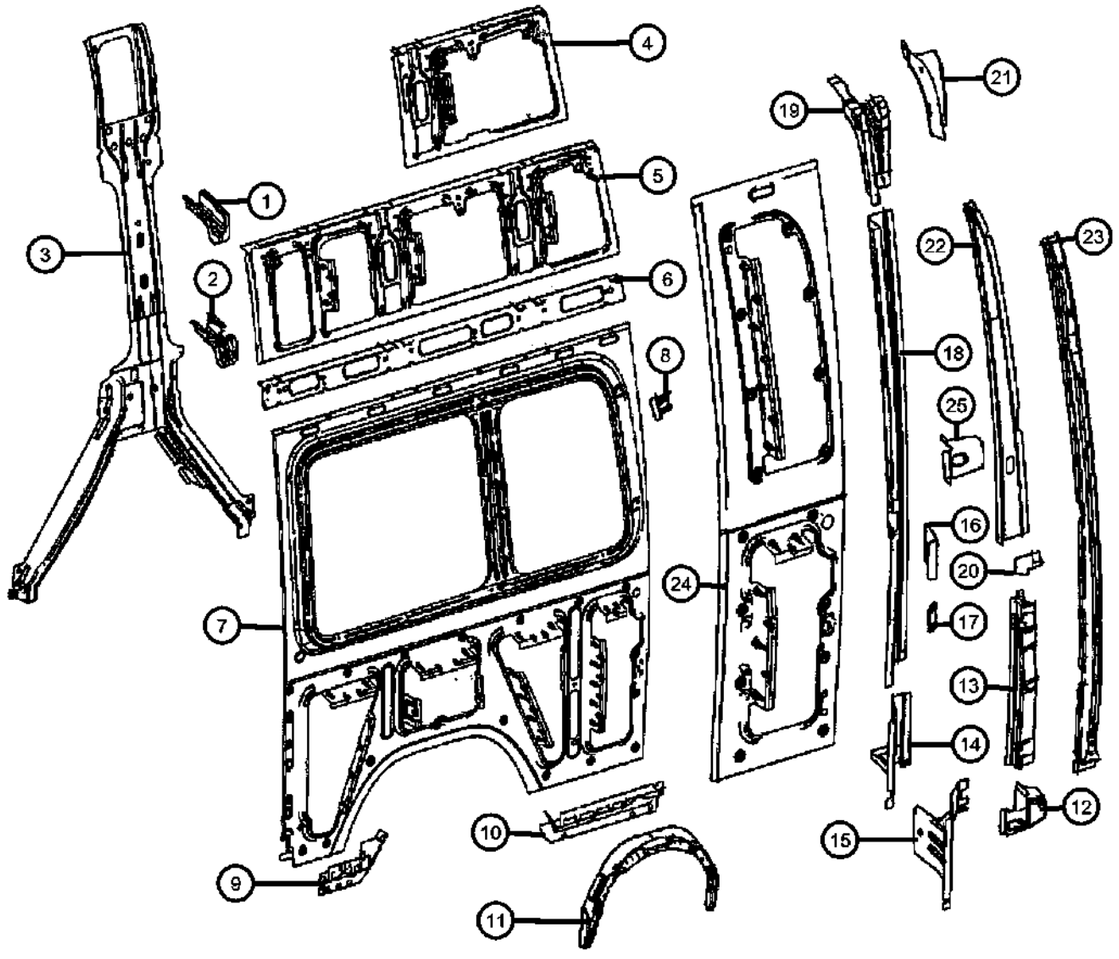

ITEM	PART NUMBER	QTY	LINE	SERIES	BODY	ENGINE	TRANS	TRIM	DESCRIPTION
1									BRACKET
	68008615AA	3	2, 3, 6, 7		13, 53				
	68008614AA	2	2, 3, 6, 7						
		5	2, 3, 6, 7		13, 15, 17, 53, 55				
2	68008654AA	1	2, 3, 6, 7		13, 15, 17				BRACKET, C pillar
3	68008742AA	1	2, 3, 6, 7		15, 17, 55				REINFORCEMENT, Side Panel
4	68008651AA	1	2, 3, 6, 7		17				REINFORCEMENT, Roof Panel
5									REINFORCEMENT, Roof Panel
	68008641AA	1	2, 3, 6, 7		13, 53				
	68008627AA	1	2, 3, 6, 7		17				
	68008645AA	1	2, 3, 6, 7		15, 55				
6	68008643AA	1	2, 3, 6, 7		13, 53				REINFORCEMENT, Roof Panel
7									PANEL
	68008709AA	1	2, 3, 6, 7		13, 53				
	68008711AA	1	2, 3, 6, 7		15, 17, 55				
8	68008738AA	1	2, 3, 6, 7		13, 15, 17, 53, 55				REINFORCEMENT
9									REINFORCEMENT, Side Panel
	68008727AA	1	7, 2, 3, 6		13, 53				
	68008731AA	1	2, 3, 6, 7		17, 55, 15				
10									REINFORCEMENT, Side Panel
	68008715AA	1	2, 3, 6, 7		13, 53				
	68008717AA	1	2, 3, 6, 7		15, 55				
	68008719AA	1	2, 3, 6, 7		17				
11									WHEELHOUSE
	68008765AA	1	2, 3, 6, 7						
	68008766AA	1	2, 3, 6, 7		13, 15, 17, 53, 55				
12	68008538AA	1	2, 3, 6, 7		13, 15, 17, 53, 55				REINFORCEMENT
13	68008549AA	1	2, 3, 6, 7		13, 15, 17, 53, 55				REINFORCEMENT
14	68008759AA	1	2, 3, 6, 7		13, 15, 17, 53, 55				BRACKET

SPRINTER (VB)

SERIES	LINE	BODY	ENGINE	TRANSMISSION
L = LOWLINE	3 = HD DODGE 2WD 2 = Med. Duty DODGE 2WD	03 = CAB CHASSIS WHEEL BASE 3 05 = CAB CHASSIS WHEEL BASE 5 13 = 119 WB 53 = 119 WB 15 = VAN WHEEL BASE 5 55 = WAGON WHEEL BASE 5 17 = VAN WHEEL BASE 7	EG2 = 3.5L V6 Gas Engine EXM = 3.0L V6 Turbo Diesel Engine	DGZ = 5-Speed Auto W5A380 Transmission

Side Panel Inner, Left
Figure SVB-915

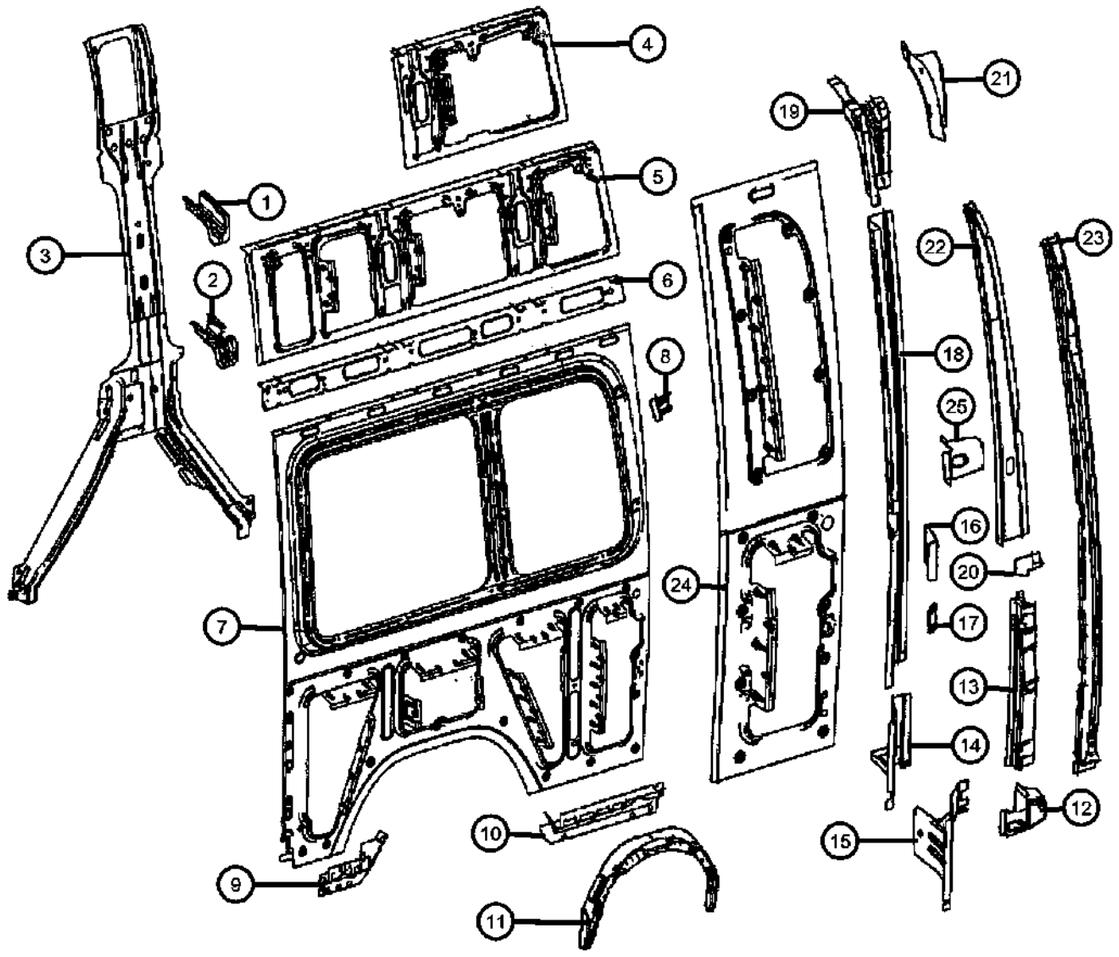

ITEM	PART NUMBER	QTY	LINE	SERIES	BODY	ENGINE	TRANS	TRIM	DESCRIPTION
15	68008760AA	1	2, 3, 6, 7		13, 15, 17, 53, 55				REINFORCEMENT
16	68008763AA	1	2, 3, 6, 7		13, 15, 17, 53, 55				REINFORCEMENT
17	68008757AA	1	2, 3, 6, 7		13, 15, 17, 53, 55				BRACKET
18	68008755AA	1	2, 3, 6, 7		13, 15, 17, 53, 55				PANEL, D Pillar
19									BRACKET, D Pillar
	68005124AA	1	2, 3, 6, 7		53, 55, 13, 15, 17				With High or Mega Roof
	68008752AA	1	2, 3, 6, 7		13, 15, 17, 53, 55				
20	68008551AA	1	2, 3, 6, 7		13, 15, 17, 53, 55				BRACKET
21									REINFORCEMENT
	68008761AA	1	2, 3, 6, 7		13, 15, 17, 53, 55				
	68008762AA	1	2, 3, 6, 7		13, 15, 17, 53, 55				With High or Mega Roof
22									BRACKET
	68008552AA	1	2, 3, 6, 7		13, 15, 17, 53, 55				
	68008553AA	1	2, 3, 6, 7		13, 15, 17, 53, 55				With High or Mega Roof
23	68008747AA	1	2, 3, 6, 7		17				PANEL, D Pillar
24	68008705AA	1	2, 3, 6, 7		17				PANEL, Side Inner
25	68008544AA	1	2, 3, 6, 7		13, 15, 17, 53, 55				REINFORCEMENT, Hinge Pillar

SPRINTER (VB)

SERIES	LINE	BODY	ENGINE	TRANSMISSION
L = LOWLINE	3 = HD DODGE 2WD 2 = Med. Duty DODGE 2WD	03 = CAB CHASSIS WHEEL BASE 3 05 = CAB CHASSIS WHEEL BASE 5 13 = 119 WB 53 = 119 WB 15 = VAN WHEEL BASE 5 55 = WAGON WHEEL BASE 5 17 = VAN WHEEL BASE 7	EG2 = 3.5L V6 Gas Engine EXM = 3.0L V6 Turbo Diesel Engine	DGZ = 5-Speed Auto W5A380 Transmission

Side Panel Inner, Right
Figure SVB-920

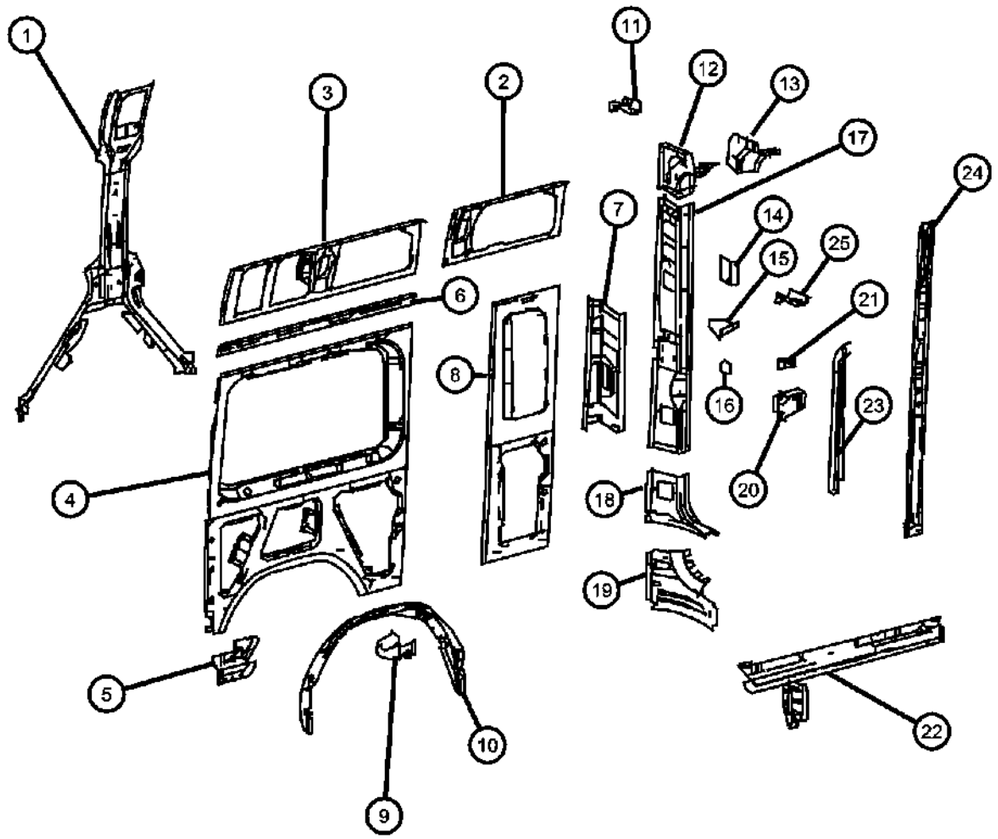

ITEM	PART NUMBER	QTY	LINE	SERIES	BODY	ENGINE	TRANS	TRIM	DESCRIPTION
1	68009330AA	1	2, 3, 6, 7		15, 17, 55				REINFORCEMENT, Side Panel
2	68008650AA	1	2, 3, 6, 7		17				REINFORCEMENT, Roof Panel
3									REINFORCEMENT, Roof Panel
	68008640AA	1	2, 3, 6, 7		13, 53				[5CF]
	68008644AA	1	2, 3, 6, 7		15, 55				[5CG]
	68009272AA	1	2, 3, 6, 7		17				
4	68008710AA	1	2, 3, 6, 7		15, 17, 55				PANEL, Side, Side Panel Inside Rear
5									REINFORCEMENT, Side Panel
	68008726AA	1	2, 3, 6, 7		13, 53				
	68008730AA	1	2, 3, 6, 7		15, 17, 55				
6	68008642AA	1	2, 3, 6, 7		13, 53				REINFORCEMENT, Roof Panel, Side Panel Inside, Roof Rail
7	68009232AA	1	2, 3, 6, 7		13, 15, 17, 53, 55				REINFORCEMENT, Side Panel Outside D-Pillar
8	68009319AA	1	2, 3, 6, 7		17				PANEL, Inner
9	68009224AA	1	2, 3, 6, 7		13, 15, 17, 53, 55				REINFORCEMENT, Hinge Bottom Right
10									PANEL, Wheelhouse
	68009347AA	1	2, 3, 6, 7						[ZU7]
	68009348AA	1	2, 6		13, 15, 17, 53, 55				
	68009351AA	1	3, 7		13, 15, 17				
11									BRACKET
	68008615AA	5	3, 6, 7, 2		13, 15, 17, 53, 55				[T16]
	68008614AA	2	2, 3, 6, 7						[D03+T16]
	68008655AA	3	2, 3, 6, 7		13, 15, 17, 53, 55				[D05]
12									PLATE
	68005147AA	1	2, 3, 6, 7		13, 15, 17, 53, 55				[D03,D05,D06] Side Panel Inside D-Pillar
	68009338AA	1	2, 3, 6, 7		13, 15, 17, 53, 55				Side Panel Inside D-Pillar
13									REINFORCEMENT
	68009345AA	1	2, 3, 6, 7		13, 15, 17, 53, 55				

SPRINTER (VB)

SERIES	LINE	BODY	ENGINE	TRANSMISSION
L = LOWLINE	3 = HD DODGE 2WD 2 = Med. Duty DODGE 2WD	03 = CAB CHASSIS WHEEL BASE 3 05 = CAB CHASSIS WHEEL BASE 5 13 = 119 WB 53 = 119 WB 15 = VAN WHEEL BASE 5 55 = WAGON WHEEL BASE 5 17 = VAN WHEEL BASE 7	EG2 = 3.5L V6 Gas Engine EXM = 3.0L V6 Turbo Diesel Engine	DGZ = 5-Speed Auto W5A380 Transmission

Side Panel Inner, Right
Figure SVB-920

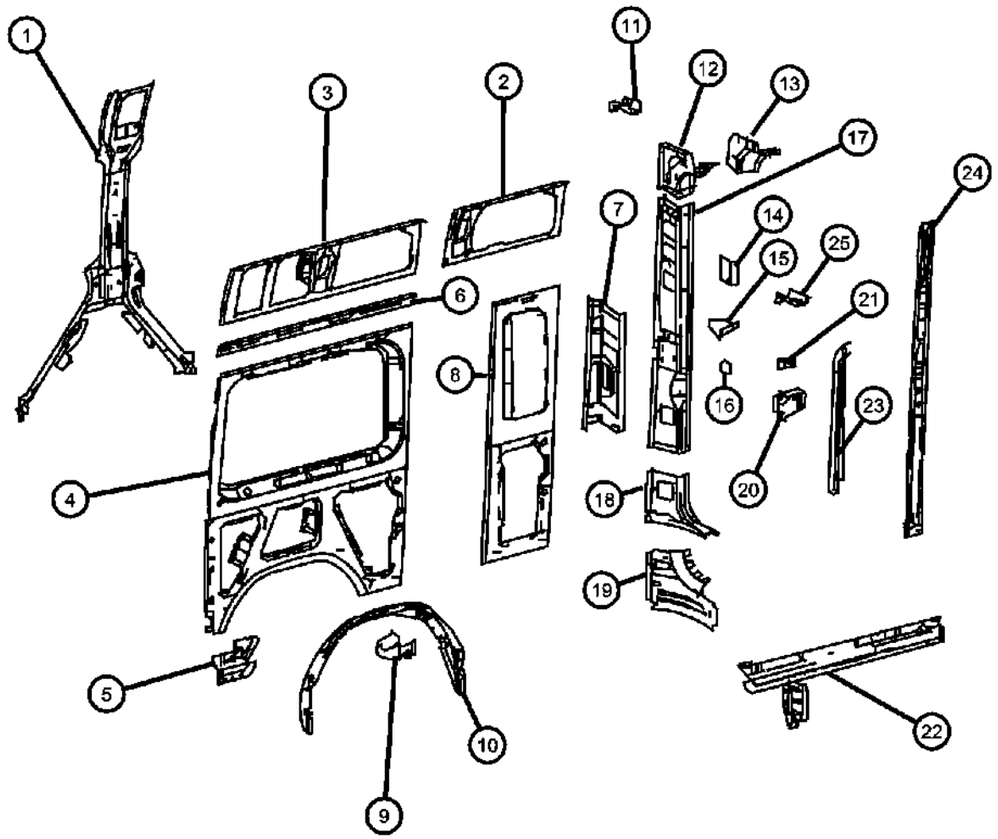

ITEM	PART NUMBER	QTY	LINE	SERIES	BODY	ENGINE	TRANS	TRIM	DESCRIPTION
	68009346AA	1	2, 3, 6, 7		13, 15, 17, 53, 55				High or Super High Roof
14	68008763AA	1	2, 3, 6, 7		13, 15, 17, 53, 55				REINFORCEMENT
15	68009233AA	1	2, 3, 6, 7		13, 15, 17, 53, 55				BRACKET
16	68008757AA	1	2, 3, 6, 7		13, 15, 17, 53, 55				BRACKET
17	68008754AA	1	2, 3, 6, 7		13, 15, 17, 53, 55				PANEL, D Pillar
18	68009343AA	1	2, 3, 6, 7		13, 15, 17, 53, 55				REINFORCEMENT
19	68009344AA	1	2, 3, 6, 7		13, 15, 17, 53, 55				REINFORCEMENT
20	68009219AA	1	2, 3, 6, 7		13, 15, 17, 53, 55				REINFORCEMENT
21									REINFORCEMENT
	68009326AA	1	2, 3, 6, 7		13, 15, 17, 53, 55				
	68009328AA	1	6, 7, 2, 3		13, 15, 17, 53, 55				Side Panel Outside D-Pillar
22									REINFORCEMENT, Side Panel
	68008716AA	1	2, 3, 6, 7		15, 55				Side Panel Inside -Rear
	68008718AA	1	2, 3, 6, 7		17				
23									PLATE
	68009230AA	1	2, 3, 6, 7		13, 15, 17, 53, 55				
	68009231AA	1	2, 3, 6, 7		13, 15, 17, 53, 55				High and Super High Roof
24	68009335AA	1	2, 3, 6, 7		17				PANEL, D Pillar
25	68009778AA	1	2, 3, 6, 7		13, 15, 17, 53, 55				BRACKET, Roof, Roof Bow

SPRINTER (VB)

SERIES	LINE	BODY	ENGINE	TRANSMISSION
L = LOWLINE	3 = HD DODGE 2WD 2 = Med. Duty DODGE 2WD	03 = CAB CHASSIS WHEEL BASE 3 05 = CAB CHASSIS WHEEL BASE 5 13 = 119 WB 53 = 119 WB 15 = VAN WHEEL BASE 5 55 = WAGON WHEEL BASE 5 17 = VAN WHEEL BASE 7	EG2 = 3.5L V6 Gas Engine EXM = 3.0L V6 Turbo Diesel Engine	DGZ = 5-Speed Auto W5A380 Transmission

Low Roof
Figure SVB-1105

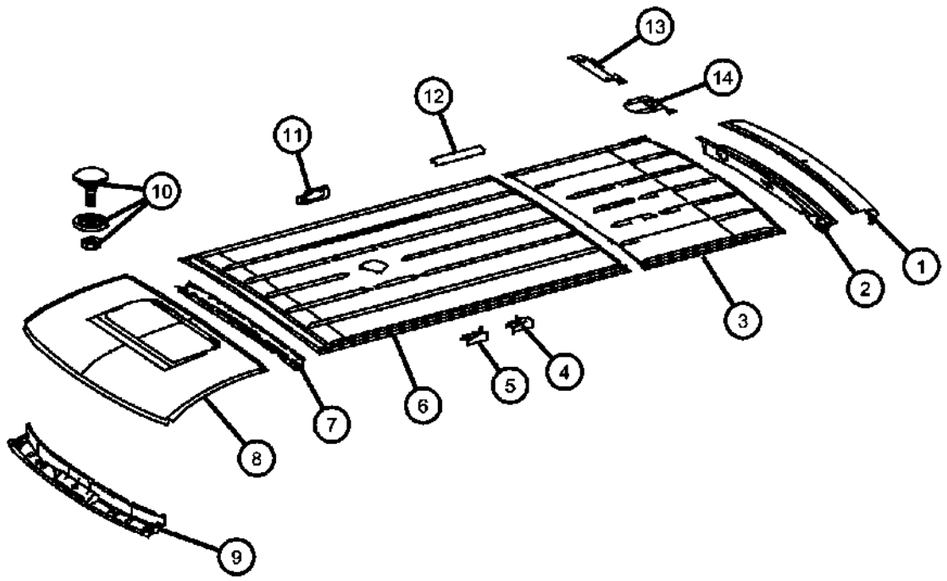

ITEM	PART NUMBER	QTY	LINE	SERIES	BODY	ENGINE	TRANS	TRIM	DESCRIPTION
1	68009755AA	1	2, 3, 6, 7		13, 15, 17, 53, 55				SUPPORT, Roof
2	68009756AA	1	2, 3, 6, 7		13, 15, 17, 53, 55				SUPPORT, Roof
3	68009749AA	1	2, 3, 6, 7		13, 53				PANEL, RoofRear
4	68009792AA	2	2, 3, 6, 7		53, 55				BOW, Roof
5	68009794AA	4	2, 3, 6, 7		53, 55				BOW, Roof
6	68009727AA	1	2, 3, 6, 7		13, 15, 17, 53, 55				PANEL, Roof, Central
7	68009771AA	6	2, 3, 6, 7		13, 53				BOW, Roof
8	68009717AA	1	2, 3, 6, 7						PANEL, Roof
9	68009764AA	1	2, 3, 6, 7						SUPPORT, Roof
10	68013418AA	1	2, 3, 6, 7						COVER
11	68009791AA	1	2, 3, 6, 7		13, 15, 17, 53, 55				BRACKET, Cargo Lamp
12	68009795AA	2	7, 2, 3, 6		53, 55				BRACKET
13	68009780AA	2	2, 3, 6, 7		13, 15, 17, 53, 55				BRACKET, Cargo Lamp
14	68009779AA	2	2, 3, 6, 7		15, 17				BRACKET, Cargo Lamp

SPRINTER (VB)

SERIES	LINE	BODY	ENGINE	TRANSMISSION
L = LOWLINE	3 = HD DODGE 2WD 2 = Med. Duty DODGE 2WD	03 = CAB CHASSIS WHEEL BASE 3 05 = CAB CHASSIS WHEEL BASE 5 13 = 119 WB 53 = 119 WB 15 = VAN WHEEL BASE 5 55 = WAGON WHEEL BASE 5 17 = VAN WHEEL BASE 7	EG2 = 3.5L V6 Gas Engine EXM = 3.0L V6 Turbo Diesel Engine	DGZ = 5-Speed Auto W5A380 Transmission

High Roof Panel
Figure SVB-1110

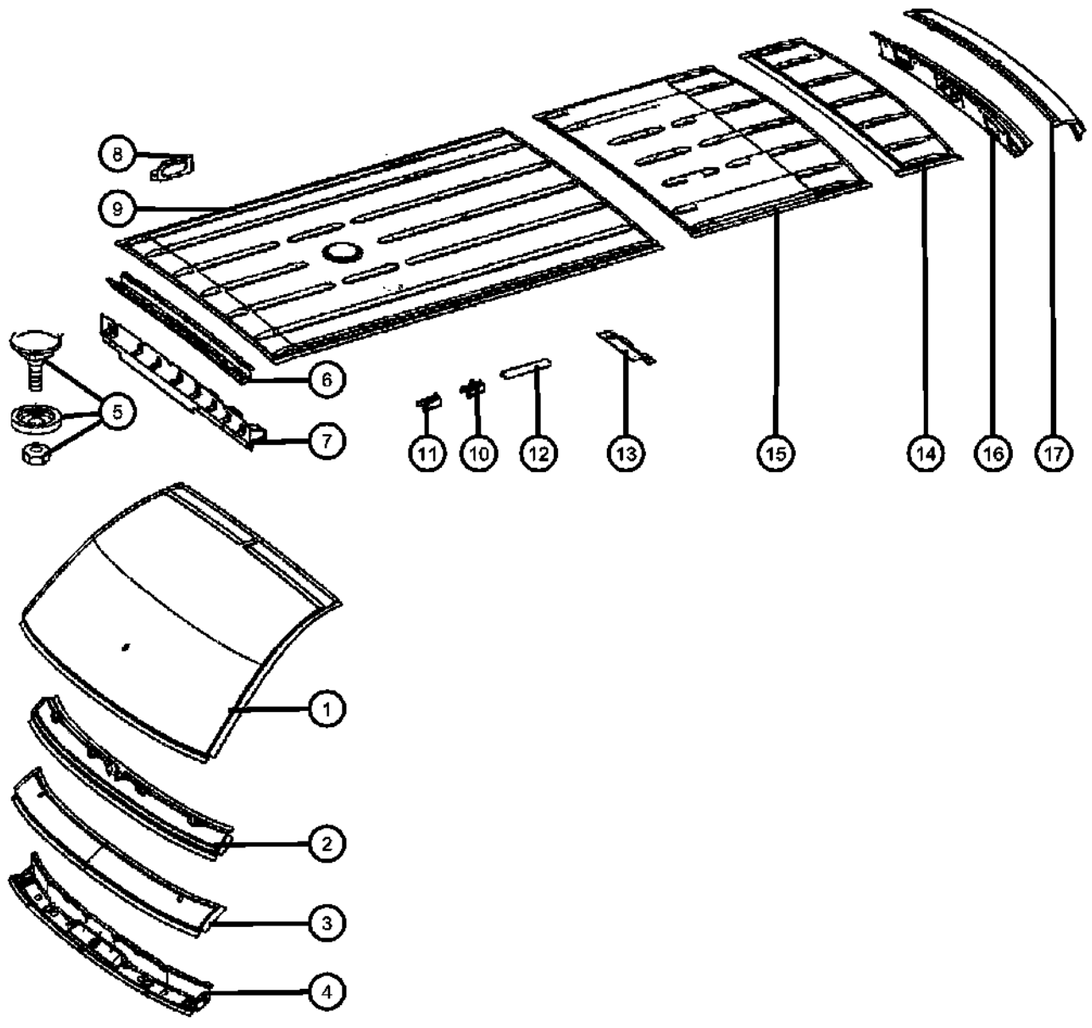

ITEM	PART NUMBER	QTY	LINE	SERIES	BODY	ENGINE	TRANS	TRIM	DESCRIPTION
1	68009718AA	1	2, 3, 6, 7		13, 15, 17, 53, 55				PANEL, Roof
2									SUPPORT, Roof
	68009715AA	1	2, 3, 6, 7		13, 15, 17, 53, 55				
		1	3, 7		03, 05				
3	68009719AA	1	3, 7		03, 05				SUPPORT, Roof
4	68009764AA	1	2, 3, 6, 7						SUPPORT, Roof
5	68013418AA	1	2, 3, 6, 7						COVER
6									BOW, Roof
	68009770AA	6	2, 3, 6, 7		13, 15, 17, 53, 55				
		1	2, 3, 6, 7		13, 15, 17, 53, 55				
7	68009778AA	1	2, 3, 6, 7		13, 15, 17, 53, 55				BRACKET, Roof
8	68009791AA	1	2, 3, 6, 7		13, 15, 17, 53, 55				BRACKET, Cargo Lamp
9	68009728AA	1	3, 6, 7, 2		13, 15, 17, 53, 55				PANEL, Roof
10									BOW, Roof
	68009792AA	2	2, 3, 6, 7		53, 55				
		2	2, 6		53, 55				
11	68009794AA	4	2, 3, 6, 7		53, 55				BOW, Roof
12	68014272AA	1	2, 3, 6, 7		13, 15, 17				BOW, Roof
13	68009780AA	2	2, 3, 6, 7		13, 15, 17, 53, 55				BRACKET, Cargo Lamp
14									PANEL, Roof
	68009746AA	1	2, 3, 6, 7		13, 15, 53, 55				
	68009750AA	1	2, 3, 6, 7		17				
15	68009751AA	2	2, 3, 6, 7		15, 17, 55				PANEL, Roof
16	68009757AA	1	2, 3, 6, 7		13, 15, 17, 53, 55				SUPPORT, Roof
17	68009754AA	1	2, 3, 6, 7		13, 15, 17, 53, 55				SUPPORT, Roof

SPRINTER (VB)

SERIES	LINE	BODY	ENGINE	TRANSMISSION
L = LOWLINE	3 = HD DODGE 2WD 2 = Med. Duty DODGE 2WD	03 = CAB CHASSIS WHEEL BASE 3 05 = CAB CHASSIS WHEEL BASE 5 13 = 119 WB 53 = 119 WB 15 = VAN WHEEL BASE 5 55 = WAGON WHEEL BASE 5 17 = VAN WHEEL BASE 7	EG2 = 3.5L V6 Gas Engine EXM = 3.0L V6 Turbo Diesel Engine	DGZ = 5-Speed Auto W5A380 Transmission

Super High Roof
Figure SVB-1115

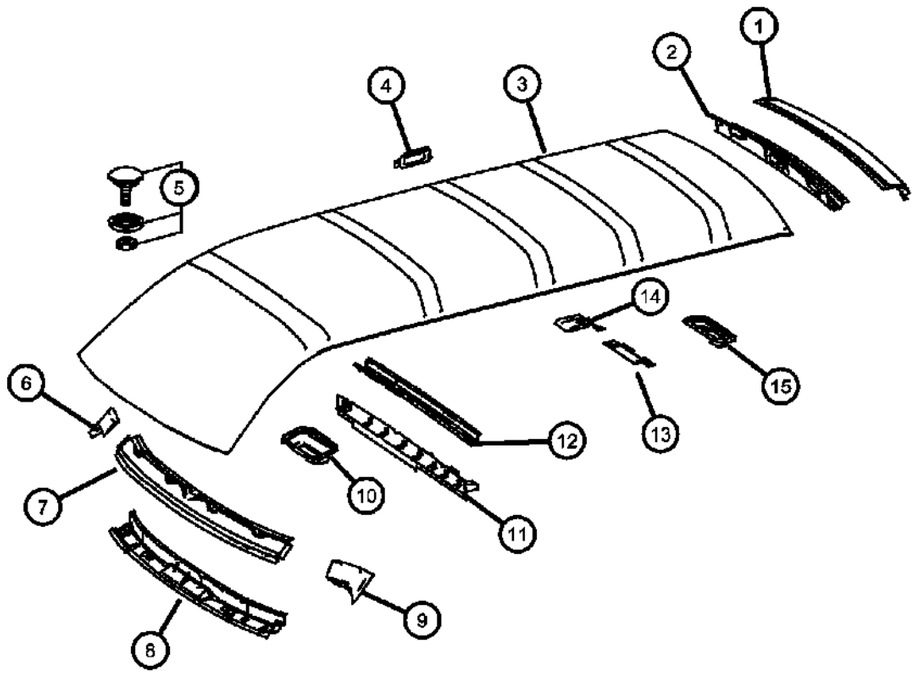

ITEM	PART NUMBER	QTY	LINE	SERIES	BODY	ENGINE	TRANS	TRIM	DESCRIPTION
1									SUPPORT, Roof
	68009752AA	1	2, 3, 6, 7		13, 15, 17, 53, 55				With [LPA]
	68009754AA	1	2, 3, 6, 7		13, 15, 17, 53, 55				Without [LPA]
2	68009757AA	1	2, 3, 6, 7		13, 15, 17, 53, 55				SUPPORT, Roof
3									ROOF
	68030761AA	1	2, 3, 6, 7		15				
	68030769AA	1	2, 3, 6, 7		15				Without [NHY]
	68030773AA	1	2, 3, 6, 7		17				
	68030775AA	1	2, 3, 6, 7		17				With [5CK] [58N]
4	68009791AA	1	2, 3, 6, 7		13, 15, 17, 53, 55				BRACKET, Cargo Lamp
5	68013418AA	1	2, 3, 6, 7						COVER
6	1JE76DX9AA	1	2, 3, 6, 7		13, 15, 17, 53, 55				COVER, Left
7	68009715AA	1	2, 3, 6, 7		13, 15, 17, 53, 55				SUPPORT, Roof
8	68009764AA	1	2, 3, 6, 7						SUPPORT, Roof
9	1JE81DX9AA	1	2, 3, 6, 7		13, 15, 17, 53, 55				COVER, Right
10	1JE75NCVAA	1	2, 3, 6, 7		13, 15, 17, 53, 55				BRACKET
11	68009778AA	1	2, 3, 6, 7		13, 15, 17, 53, 55				BRACKET, Roof
12									BOW, Roof
	68009770AA	1	2, 3, 6, 7		13, 15, 17, 53, 55				
	68009771AA	1	2, 3, 6, 7		13, 15, 17, 53, 55				With [CTA]
13	68009780AA	2	2, 3, 6, 7		13, 15, 17, 53, 55				BRACKET, Cargo Lamp
14	68009779AA	2	2, 3, 6, 7		15, 17				BRACKET, Cargo Lamp
15	68017908AA	1	2, 3, 6, 7		13, 15, 17, 53, 55				BRACKET

SPRINTER (VB)

SERIES	LINE	BODY	ENGINE	TRANSMISSION
L = LOWLINE	3 = HD DODGE 2WD 2 = Med. Duty DODGE 2WD	03 = CAB CHASSIS WHEEL BASE 3 05 = CAB CHASSIS WHEEL BASE 5 13 = 119 WB 53 = 119 WB 15 = VAN WHEEL BASE 5 55 = WAGON WHEEL BASE 5 17 = VAN WHEEL BASE 7	EG2 = 3.5L V6 Gas Engine EXM = 3.0L V6 Turbo Diesel Engine	DGZ = 5-Speed Auto W5A380 Transmission

Sunroof
Figure SVB-1210

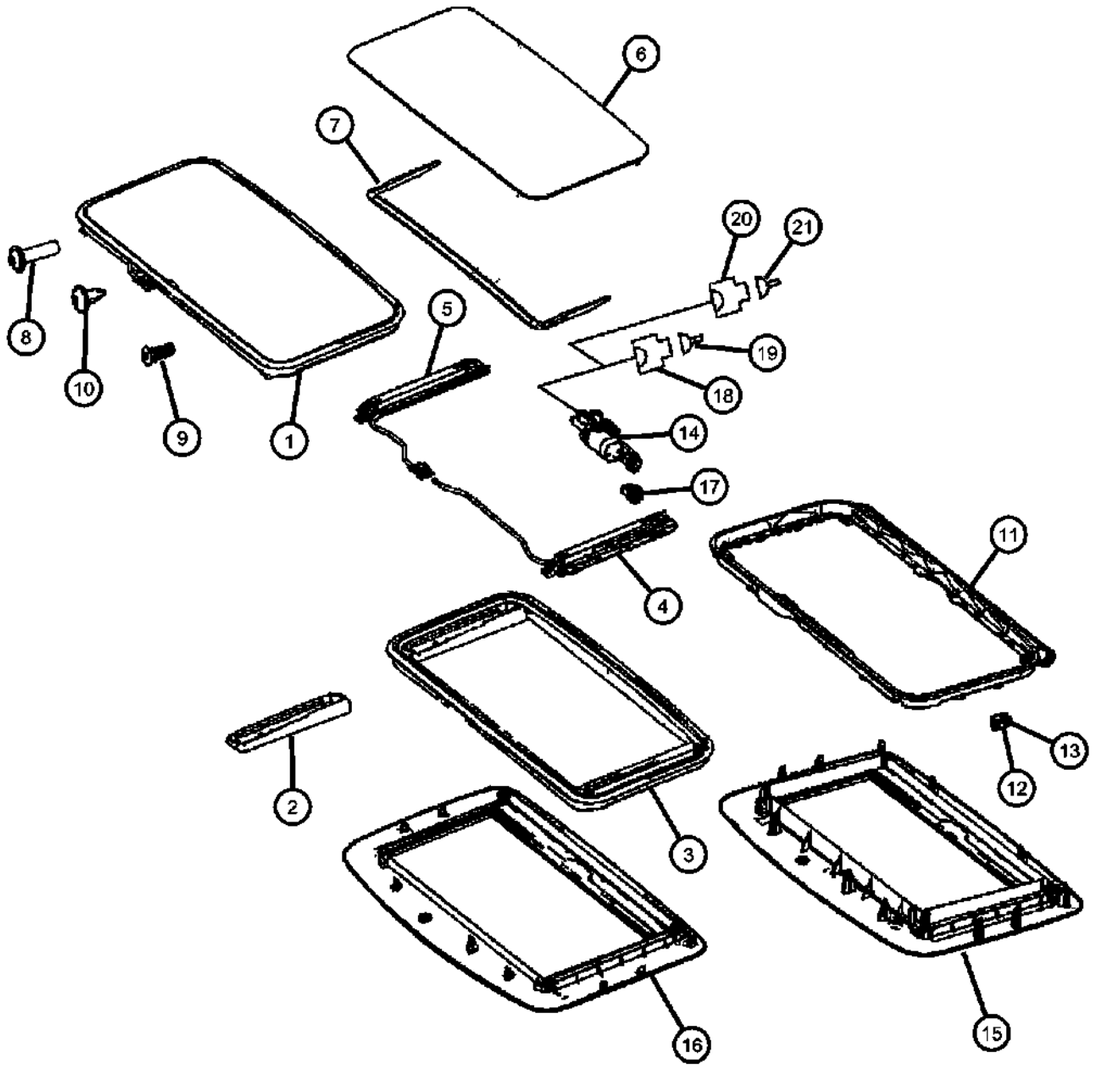

ITEM	PART NUMBER	QTY	LINE	SERIES	BODY	ENGINE	TRANS	TRIM	DESCRIPTION
1	68018812AA	1	2, 3, 6, 7		03, 05, 13, 53, 55				GLASS, Sunroof, With [GW9 And Or GWA]
2	68018814AA	1	2, 3, 6, 7		03, 05, 53, 55				RAIL, Roof, With [GW9 And Or GWA]
3									FRAME, Sunroof
	68018815AA	1	2, 3, 6, 7		03, 05, 53, 55				With [GW9 And Or GWA]
		1	2, 3, 6, 7		13, 15, 17				With [GW9 And Or GWA]
4									GUIDE, Sunroof Track
	68018817AA	1	2, 3, 6, 7		03, 05, 53, 55				With [GW9 And Or GWA], Left
		1	2, 3, 6, 7		13, 15, 17				With [GW9 And Or GWA], Left
5									GUIDE, Sunroof Track
	68018816AA	1	2, 3, 6, 7		03, 05, 53, 55				With [GW9 And Or GWA], Right
		1	2, 3, 6, 7		13, 15, 17				With [GW9 And Or GWA], Right
6									SUNSHADE, Sunroof
	68018818AA	1	2, 3, 6, 7		03, 05, 53, 55				With [GW9 And Or GWA]
		1	2, 3, 6, 7		13, 15, 17				With [GW9 And Or GWA]
7									DEFLECTOR, Sunroof Wind
	68018819AA	1	2, 3, 6, 7		03, 05, 53, 55				With [GW9 And Or GWA]
		1	2, 3, 6, 7		13, 15, 17				With [GW9 And Or GWA]
8									SCREW
	06104635AA	15	3, 7		03, 05				With [GW9 And Or GWA]
		15	2, 3, 6, 7		13, 15, 17, 53, 55				With [GW9 And Or GWA]
9									SCREW, 5x16
	06104658AA	8	2, 3, 6, 7		13, 15, 17				With [GW9 And Or GWA]
		8	2, 3, 6, 7		03, 05, 53, 55				With [GW9 And Or GWA]
10									SCREW, Sun Roof
	68018813AA	2	2, 3, 6, 7		03, 05, 53, 55				With [GW9 And Or GWA]
		2	2, 3, 6, 7		13, 15, 17				With [GW9 And Or GWA]
11									FRAME, Sunroof

SPRINTER (VB)

SERIES	LINE	BODY	ENGINE	TRANSMISSION
L = LOWLINE	3 = HD DODGE 2WD 2 = Med. Duty DODGE 2WD	03 = CAB CHASSIS WHEEL BASE 3 05 = CAB CHASSIS WHEEL BASE 5 13 = 119 WB 53 = 119 WB 15 = VAN WHEEL BASE 5 55 = WAGON WHEEL BASE 5 17 = VAN WHEEL BASE 7	EG2 = 3.5L V6 Gas Engine EXM = 3.0L V6 Turbo Diesel Engine	DGZ = 5-Speed Auto W5A380 Transmission

Sunroof
Figure SVB-1210

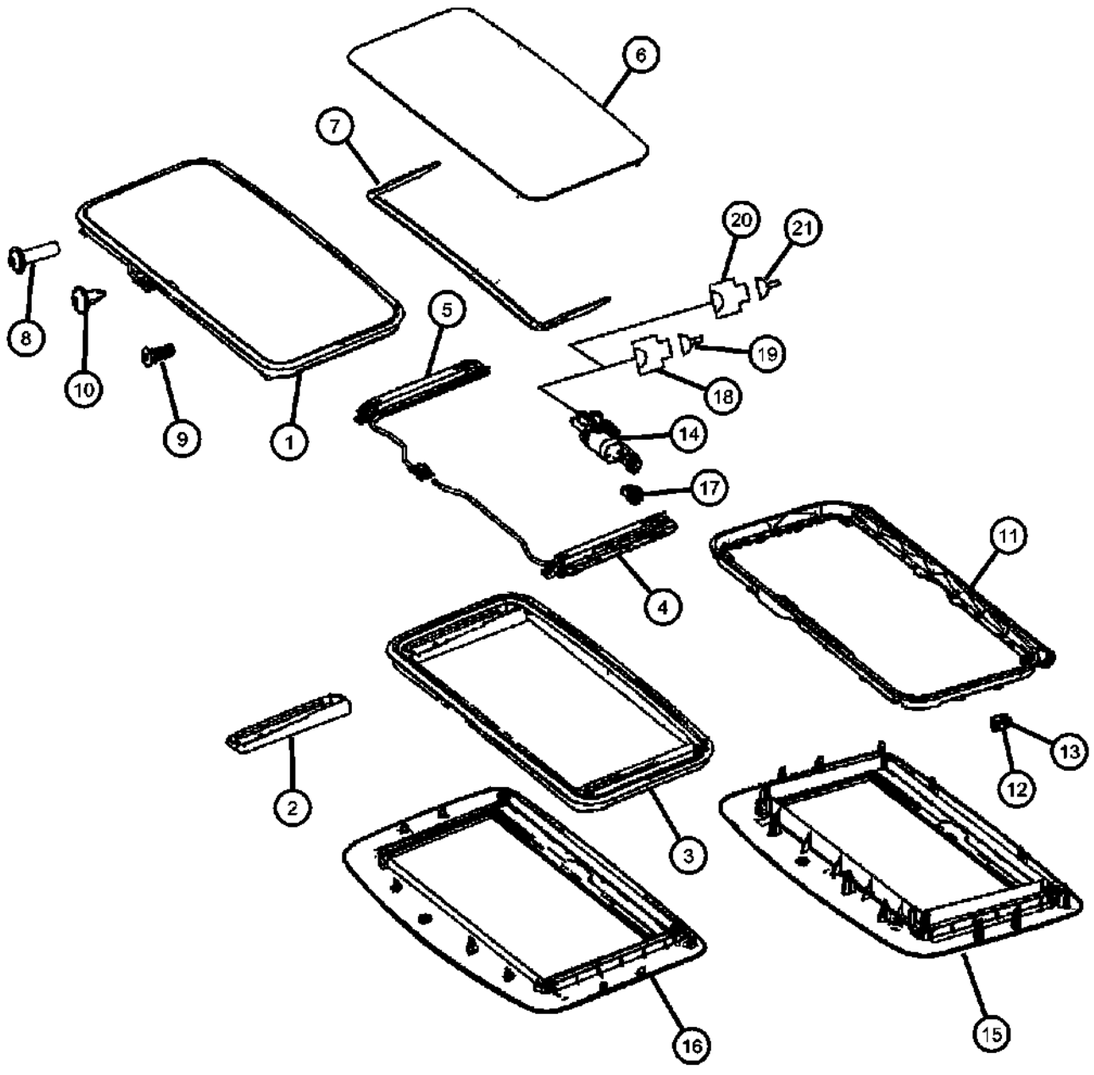

ITEM	PART NUMBER	QTY	LINE	SERIES	BODY	ENGINE	TRANS	TRIM	DESCRIPTION
	68018820AA	1	2, 3, 6, 7		13, 15, 17, 53, 55				With [GW9 And Or GWA]
		1	2, 3, 6, 7		03, 05				With [GW9 And Or GWA]
12									CLIP, Sunroof
	68018821AA	1	2, 3, 6, 7		03, 05, 53, 55				With [GW9 And Or GWA]
		1	2, 3, 6, 7		13, 15, 17				With [GW9 And Or GWA]
13	68020388AA	11	2, 3, 6, 7						CLIP, Retainer, Parts Kit - Clips / With [GW9 And Or GWA]
14									MOTOR/MODULE, Sunroof
	68018822AA	1	3, 7		03, 05				With [GW9 And Or GWA]
		1	2, 3, 6, 7		13, 15, 17, 53, 55				With [GW9 And Or GWA]
15	68018827AA	1	2, 3, 6, 7		13, 15, 17, 53, 55				TRIM, Sunroof opening, Rear Cover Only / With [GW9]
16									COVER, Sunroof Mechanism
	68018823AA	1	2, 3, 6, 7		03, 05, 53, 55				Front Cover Only / With [GWA]
		1	2, 3, 6, 7		13, 15, 17				Front Cover Only / With [GWA]
17									CONNECTOR, Wiring
	68011368AA	1	2, 3, 6, 7		03, 05, 53, 55				[6 Pin]
		1	2, 3, 6, 7		13, 15, 17				[6 Pin]
18									CONNECTOR
	68011254AA	1	2, 3, 6, 7		13, 15, 17				Rear Connector [6-Pin]
		1	2, 3, 6, 7		03, 05, 53, 55				Rear Connector [6-Pin]
19									TERMINAL
	05133945AA	AR	3, 7		03, 05				[0.5 - 1.0 MM]
	05143897AA	AR	2, 3, 6, 7		03, 05, 53, 55				[1.0 - 2.5 MM]
		AR	2, 3, 6, 7		13, 15, 17				[1.0 - 2.5 MM]
		AR	2, 3, 6, 7		13, 15, 17, 53, 55				[0.5 - 1.0 MM]
20									CONNECTOR
	68011254AA	1	2, 3, 6, 7		13, 15, 17				[6 - PIN]
		1	2, 3, 6, 7		03, 05, 53, 55				[6 - PIN]

SPRINTER (VB)

SERIES	LINE	BODY	ENGINE	TRANSMISSION
L = LOWLINE	3 = HD DODGE 2WD 2 = Med. Duty DODGE 2WD	03 = CAB CHASSIS WHEEL BASE 3 05 = CAB CHASSIS WHEEL BASE 5 13 = 119 WB 53 = 119 WB 15 = VAN WHEEL BASE 5 55 = WAGON WHEEL BASE 5 17 = VAN WHEEL BASE 7	EG2 = 3.5L V6 Gas Engine EXM = 3.0L V6 Turbo Diesel Engine	DGZ = 5-Speed Auto W5A380 Transmission

AR = use ase required - = Non illustrrated part

<< RETURN TO GROUP INDEX

Sunroof
Figure SVB-1210

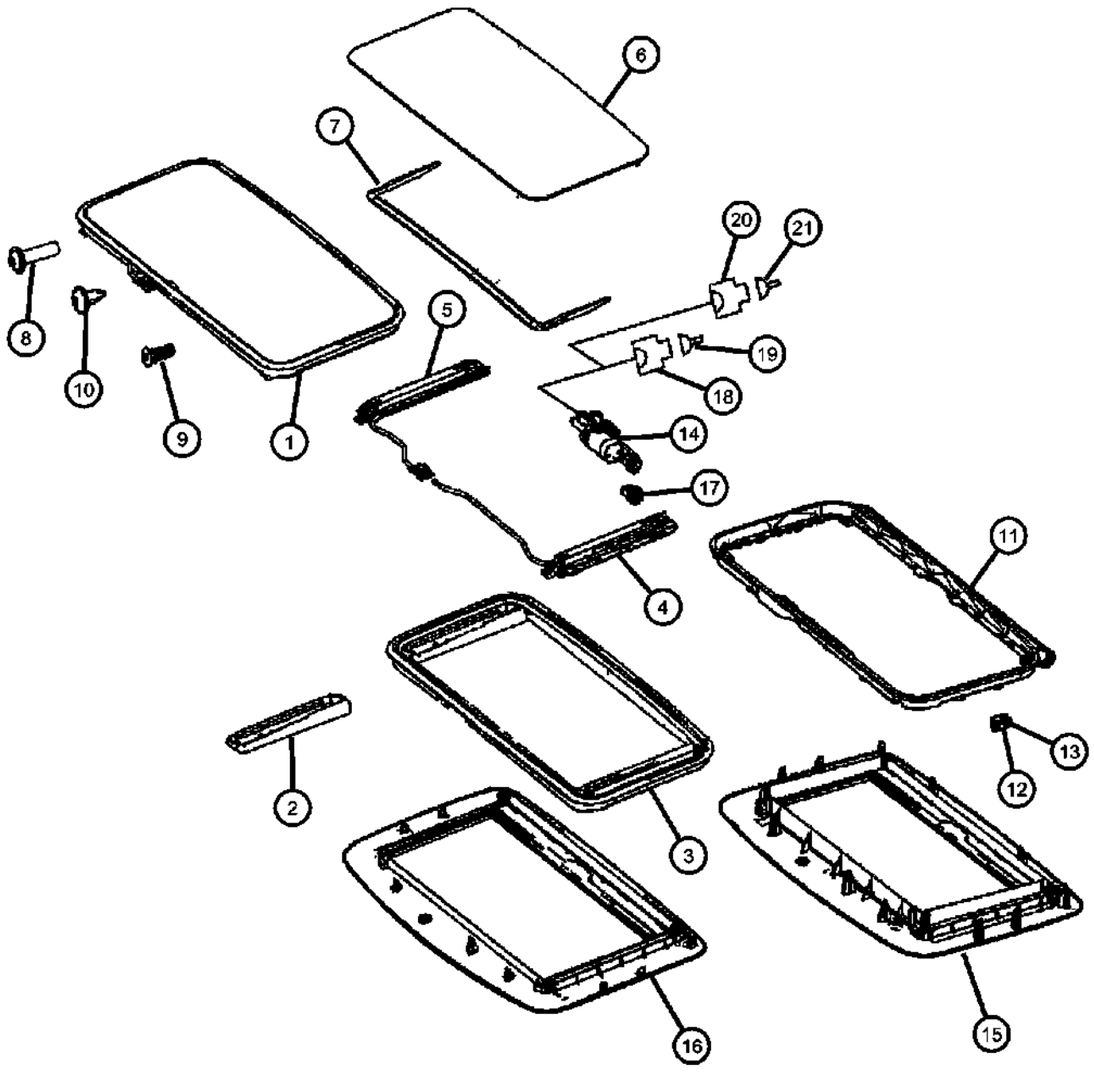

ITEM	PART NUMBER	QTY	LINE	SERIES	BODY	ENGINE	TRANS	TRIM	DESCRIPTION
21									TERMINAL
	05133945AA	AR	2, 3, 6, 7		13, 15, 17, 53, 55				[0.5 - 1.0 MM]
		AR	3, 7		03, 05				[0.5 - 1.0 MM]
	05143897AA	AR	2, 3, 6, 7		03, 05, 53, 55				[1.0 - 2.5 MM]
		AR	2, 3, 6, 7		13, 15, 17				[1.0 - 2.5 MM]

SPRINTER (VB)

SERIES	LINE	BODY	ENGINE	TRANSMISSION
L = LOWLINE	3 = HD DODGE 2WD 2 = Med. Duty DODGE 2WD	03 = CAB CHASSIS WHEEL BASE 3 05 = CAB CHASSIS WHEEL BASE 5 13 = 119 WB 53 = 119 WB 15 = VAN WHEEL BASE 5 55 = WAGON WHEEL BASE 5 17 = VAN WHEEL BASE 7	EG2 = 3.5L V6 Gas Engine EXM = 3.0L V6 Turbo Diesel Engine	DGZ = 5-Speed Auto W5A380 Transmission

Luggage Rack
Figure SVB-1610

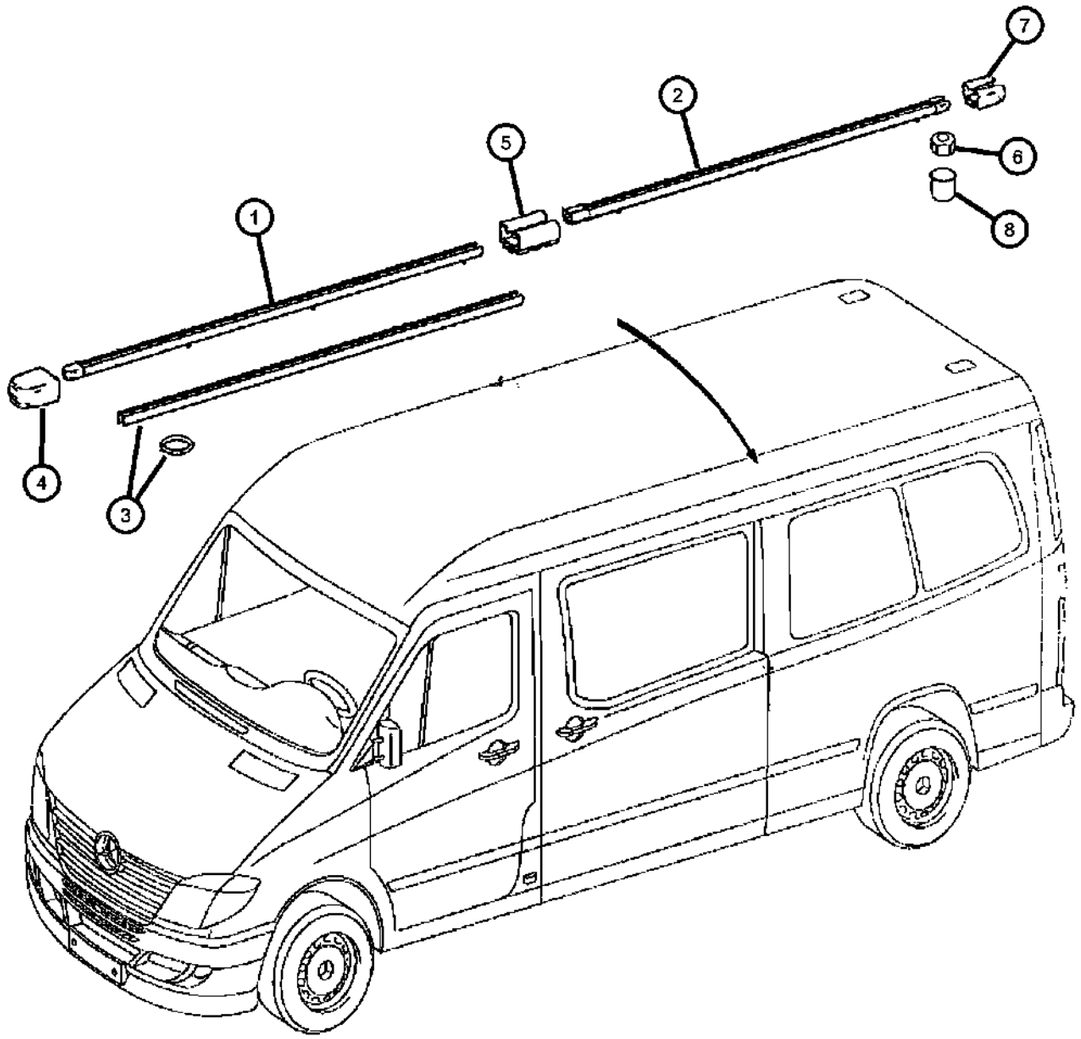

ITEM	PART NUMBER	QTY	LINE	SERIES	BODY	ENGINE	TRANS	TRIM	DESCRIPTION
1	68017893AA	2	2, 3, 6, 7		13, 15, 17, 53, 55				RAIL, RoofRight & Left
2									RAIL, Roof
	68017896AA	2	2, 3, 6, 7		15, 55				170 Inch Extended Wheel Base, Right & Left
	68017894AA	2	2, 3, 6, 7		15, 55				170 Inch Wheel Base, Right & Left
	68017895AA	2	2, 3, 6, 7		13, 15, 17, 53, 55				144 Inch Wheel Base, Right & Left
3	68017897AA	1	2, 3, 6, 7		15, 55				SEAL
4	68017898AA	1	2, 3, 6, 7		13, 15, 17, 53, 55				COVER
5	68017899AA	1	2, 3, 6, 7		13, 15, 17, 53, 55				BRACKET
6	05098361AA	16	2, 3, 6, 7		13, 53				NUT, Hex
7	68017900AA	1	2, 3, 6, 7		15, 55				COVER
8	05126256AA	2	2, 3, 6, 7		13, 15, 17, 53, 55				CAP

SPRINTER (VB)

SERIES	LINE	BODY	ENGINE	TRANSMISSION
L = LOWLINE	3 = HD DODGE 2WD 2 = Med. Duty DODGE 2WD	03 = CAB CHASSIS WHEEL BASE 3 05 = CAB CHASSIS WHEEL BASE 5 13 = 119 WB 53 = 119 WB 15 = VAN WHEEL BASE 5 55 = WAGON WHEEL BASE 5 17 = VAN WHEEL BASE 7	EG2 = 3.5L V6 Gas Engine EXM = 3.0L V6 Turbo Diesel Engine	DGZ = 5-Speed Auto W5A380 Transmission

Group - LBLS

Labels All Vehicle Locations

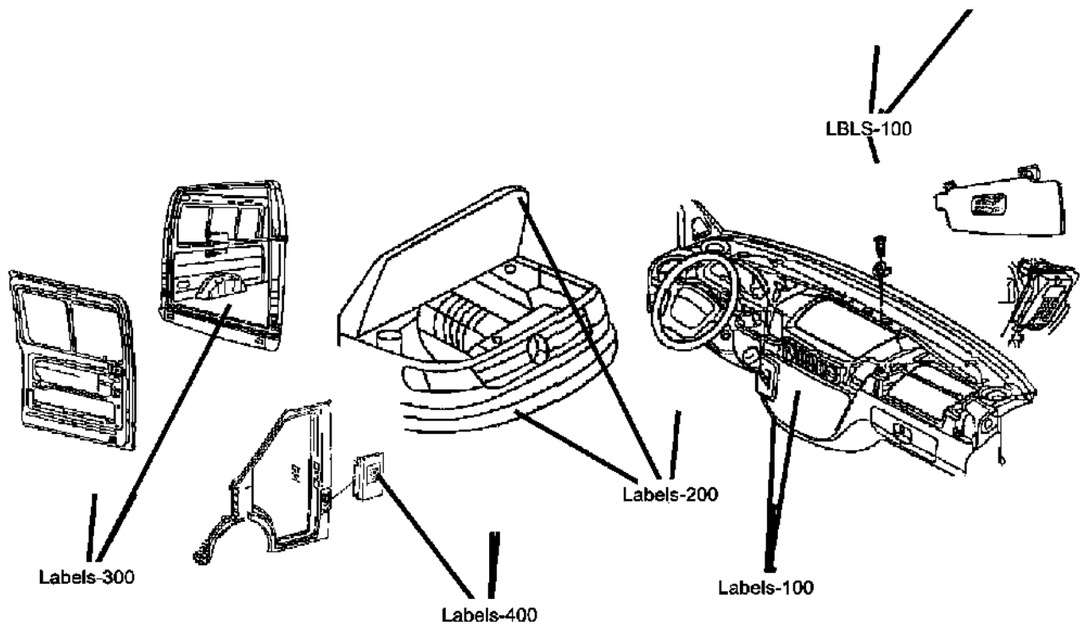

Group - LBLS Labels All Vehicle Locations

Illustration Title — Group-Fig. No.

Interior
Visor ..... Fig. LBLS - 105

Under Hood
Battery ..... Fig. LBLS - 205

Doors
Tire ..... Fig. LBLS - 305

Exterior
Fuel Door ..... Fig. LBLS - 405

LBLS-100 Interior	**LBLS-200** Under Hood	**LBLS-300** Doors	**LBLS-400** Exterior
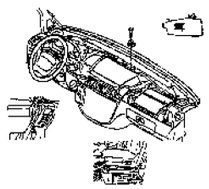		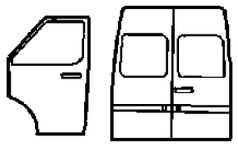	

Visor
Figure LBLS-105

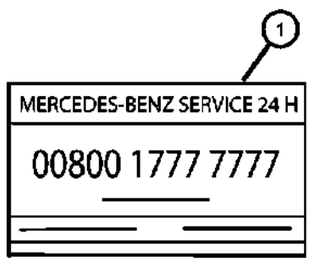

ITEM	PART NUMBER	QTY	LINE	SERIES	BODY	ENGINE	TRANS	TRIM	DESCRIPTION
1	05104450AA	1		L	03, 05	EG2, EXM			GUIDE
-2	68005381AA	1		L	13, 15, 17, 53, 55	EG2, EXM			LABEL, Warning
-3	68005380AA	1		L	13, 15, 17, 53, 55	EG2, EXM			LABEL, Air Conditioner

SPRINTER (VB)

SERIES	LINE	BODY	ENGINE	TRANSMISSION
L = LOWLINE	3 = HD DODGE 2WD 2 = Med. Duty DODGE 2WD	03 = CAB CHASSIS WHEEL BASE 3 05 = CAB CHASSIS WHEEL BASE 5 13 = 119 WB 53 = 119 WB 15 = VAN WHEEL BASE 5 55 = WAGON WHEEL BASE 5 17 = VAN WHEEL BASE 7	EG2 = 3.5L V6 Gas Engine EXM = 3.0L V6 Turbo Diesel Engine	DGZ = 5-Speed Auto W5A380 Transmission

Battery
Figure LBLS-205

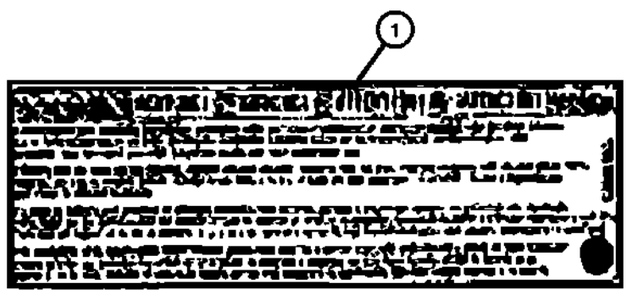

ITEM	PART NUMBER	QTY	LINE	SERIES	BODY	ENGINE	TRANS	TRIM	DESCRIPTION
1	68015895AA	1		L		EG2, EXM			LABEL, Battery

SPRINTER (VB)

SERIES	LINE	BODY	ENGINE	TRANSMISSION
L = LOWLINE	3 = HD DODGE 2WD 2 = Med. Duty DODGE 2WD	03 = CAB CHASSIS WHEEL BASE 3 05 = CAB CHASSIS WHEEL BASE 5 13 = 119 WB 53 = 119 WB 15 = VAN WHEEL BASE 5 55 = WAGON WHEEL BASE 5 17 = VAN WHEEL BASE 7	EG2 = 3.5L V6 Gas Engine EXM = 3.0L V6 Turbo Diesel Engine	DGZ = 5-Speed Auto W5A380 Transmission

Tire
Figure LBLS-305

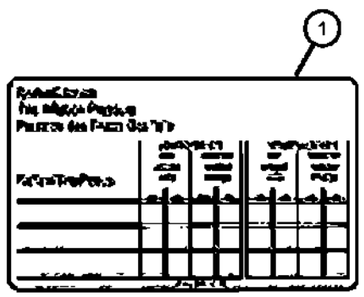

ITEM	PART NUMBER	QTY	LINE	SERIES	BODY	ENGINE	TRANS	TRIM	DESCRIPTION
1	68022059AA	4		L	13, 15, 17, 53, 55	EG2, EXM			LABEL, Tire Pressure

SPRINTER (VB)

SERIES	LINE	BODY	ENGINE	TRANSMISSION
L = LOWLINE	3 = HD DODGE 2WD 2 = Med. Duty DODGE 2WD	03 = CAB CHASSIS WHEEL BASE 3 05 = CAB CHASSIS WHEEL BASE 5 13 = 119 WB 53 = 119 WB 15 = VAN WHEEL BASE 5 55 = WAGON WHEEL BASE 5 17 = VAN WHEEL BASE 7	EG2 = 3.5L V6 Gas Engine EXM = 3.0L V6 Turbo Diesel Engine	DGZ = 5-Speed Auto W5A380 Transmission

Fuel Door
Figure LBLS-405



ITEM	PART NUMBER	QTY	LINE	SERIES	BODY	ENGINE	TRANS	TRIM	DESCRIPTION
1	68025191AA	1		L		EXM			LABEL, Fuel
-2	68013523AA	1		L		EXM			LABEL, Warning, Refuelling Plate in English

SPRINTER (VB)

SERIES	LINE	BODY	ENGINE	TRANSMISSION
L = LOWLINE	3 = HD DODGE 2WD 2 = Med. Duty DODGE 2WD	03 = CAB CHASSIS WHEEL BASE 3 05 = CAB CHASSIS WHEEL BASE 5 13 = 119 WB 53 = 119 WB 15 = VAN WHEEL BASE 5 55 = WAGON WHEEL BASE 5 17 = VAN WHEEL BASE 7	EG2 = 3.5L V6 Gas Engine EXM = 3.0L V6 Turbo Diesel Engine	DGZ = 5-Speed Auto W5A380 Transmission